Section 22- Planning Assistance to States Program

Blackstone River Restoration Study

November 1994

US Army Corps of Engineers
New England Division

REPORT DOCUMENTATION PAGE

Form Approved
OMB No. 0704-0188

Public reporting burden for this collection of information is estimated to average 1 hour per response, including the time for reviewing instructions, searching existing data sources, gathering and maintaining the data needed, and completing and reviewing the collection of information. Send comments regarding this burden estimate or any other aspect of this collection of information, including suggestions for reducing this burden, to Washington Headquarters Services, Directorate for Information Operations and Reports, 1215 Jefferson Davis Highway, Suite 1204, Arlington, VA 22202-4302, and to the Office of Management and Budget, Paperwork Reduction Project (0704-0188), Washington, DC 20503.

1. AGENCY USE ONLY (Leave blank)	2. REPORT DATE	3. REPORT TYPE AND DATES COVERED
	November 1994	Planning Assistance to States

4. TITLE AND SUBTITLE
Blackstone River Restoration Study

5. FUNDING NUMBERS

6. AUTHOR(S)
Department of the Army
Corps of Engineers, New England Division
Waltham, MA 02254-9149

7. PERFORMING ORGANIZATION NAME(S) AND ADDRESS(ES)
Planning Directorate
Basin Management Division
Long Range Planning Branch

8. PERFORMING ORGANIZATION REPORT NUMBER

9. SPONSORING/MONITORING AGENCY NAME(S) AND ADDRESS(ES)
Department of the Army, Corps of Engineers, NED
Rhode Island Department of Environmental Management
Massachusetts Executive Office of Environmental Affairs
Department of Fisheries, Wildlife and Environmental Law Enforcement

10. SPONSORING/MONITORING AGENCY REPORT NUMBER

11. SUPPLEMENTARY NOTES
Section 22, Water Resources Development Act of 1974, Public Law 93-251, as amended

12a. DISTRIBUTION/AVAILABILITY STATEMENT
Approved for public release
Distribution unlimited

12b. DISTRIBUTION CODE

13. ABSTRACT (Maximum 200 words)

The Blackstone River valley was the birthplace of the American industrial revolution. In recognition of this historical significance, the valley was designated a National Heritage Corridor by the U.S. Congress in 1986. The Blackstone River itself became thoroughly exploited by industries in the 1800's for hydropower generation and for dumping of industrial wastes. Although most of these industries are long gone, the river environment remains highly contaminated. Many of the structures along the river, including the dams and the Blackstone Canal, have been allowed to deteriorate.
Several parties have recently established various environmental, recreational and educational objectives for the river. In recognition of the inter-relationships of the objectives, the Army Corps of Engineers was requested to examine potential solutions to the river's problems and outline a plan of action to achieve the various objectives using a comprehensive(multi-objective) planning approach. This report describes the results of the Corps efforts.

14. SUBJECT TERMS	15. NUMBER OF PAGES
River restoration Comprehensive river basin planning	194
	16. PRICE CODE

17. SECURITY CLASSIFICATION OF REPORT	18. SECURITY CLASSIFICATION OF THIS PAGE	19. SECURITY CLASSIFICATION OF ABSTRACT	20. LIMITATION OF ABSTRACT
Unclassified	Unclassified	Unclassified	

Executive Summary

The Blackstone River Valley was designated a National Heritage Corridor by the U.S. Congress in recognition of the area being the birthplace of the American industrial revolution in the late eighteenth century and its importance in this revolution. Critical to the success of the industrial revolution in the valley was the harnessing of the waterpower resources of the Blackstone River. During this period, every mile of the river was dammed to harness its power, thereby changing the natural character of the river. Construction of the Blackstone River Canal along the river for shipping freight between Worcester and Providence further altered the natural river environment to serve industry and commerce.

Although most of this industry is gone, negative impacts from the industrial period are currently experienced. The decades-long practice of industry dumping its wastes into the river has resulted in the major contamination of sediments on the river's bottom, especially in the impoundments, where water velocity slows. The contaminated sediments degrade water quality whenever the sediments become resuspended. Several of the dams along the river, constructed by industries for hydropower and water supply purposes, are not maintained and are in fair or poor condition. Several of the dams are still used for hydropower generation. Barriers created by the dams eliminated runs of formerly abundant anadromous fish from the river. Waterfowl habitat associated with some of the dams continues to be degraded because of inadequate water levels and the contaminated environment. The problems of the river are highly interrelated.

Numerous entities are now interested in restoring the environmental and recreational values of the Blackstone River. Goals of the parties include the re-establishment of a healthy and diverse aquatic environment, the restoration of anadromous fish, the improvement of waterfowl habitat, and the improvement of recreational opportunities in and along the river. The need for a comprehensive (multi-objective) approach to attain these goals and solve the problems of the river has been recognized, and has culminated in the preparation of this report.

This study was performed under the Section 22 "Planning Assistance to States" program, as authorized in the Water Resources Development Act of 1974, Public Law 93-251, as amended. Sponsors of the project included the Commonwealth of Massachusetts, Executive Office of Environmental Affairs, Department of Fisheries, Wildlife, and Environmental Law Enforcement and the State of Rhode Island, Department of

Environmental Management, the non-Federal cost sharing partners. The Blackstone River Valley National Heritage Corridor Commission contributed funds to the study through the State of Rhode Island. The primary purpose of this study is to develop a framework for a comprehensive plan to achieve various water quality and environmental restoration goals for the mainstem Blackstone River. Other purposes are to document preliminary efforts pertinent to the provision of fish passage facilities on dams in the lower reach of the Blackstone River and to provide information on the anadromous fish species targeted for restoration. Another purpose is to identify actions that could be taken to improve waterfowl habitat in the Blackstone River watershed and to provide information on the waterfowl species.

It is recognized that solutions to the various problems of the river are interrelated, with achievement of one objective possibly coming at the expense of another. Many potential solutions are available to solve the river's problems, including the rehabilitation or removal of dams, the diversion of flow around dams or contamination "hot spots", the dredging or capping of contaminated sediments, the restoration of waterfowl habitat areas, and the provision of fish passage facilities at dams. There are, however, several major questions which must first be answered before the benefits and costs of various alternatives can be determined. The questions concern themselves with the relative significance of point and non-point sources (including contaminated sediment) of water pollution, the relationship between various water and sediment contaminants and their toxicity and bioaccumulation, human health and ecological risks at various sites, and the impacts of dams. A clear understanding of what is causing toxicity should be established before potentially expensive solutions are implemented.

The steps to achieving the various individual objectives are described along with what has been done or what remains to be done. An explanation of the comprehensive planning process that integrates the achievement of multiple objectives is provided. The basic premise in comprehensive planning is that a consensus among diverse groups representing various interests be attained.

The responsibilities of various Federal and state agencies concerning what remains to be done in order to achieve objectives are described, as well as their plans of action, if available. The report provides an estimate of the costs for further studying the problems of the river and their solutions. The report does not, however, provide implementation costs because of the uncertainties which exist until the major questions are answered. Potential funding sources for achievement of the objectives are also discussed.

The size, complexity and likely major cost of the tasks necessary to achieve the objectives for the Blackstone River has discouraged planning efforts. By and large, there is little planned to achieve the objectives for the river, other than to improve its water quality through the reduction of point source contamination loads and the enactment of Best Management Practices on some of the non-point sources. The recent recognition of the Blackstone River as a valuable national resource, via the valley's Heritage Corrridor designation, has rekindled the desire and a sense of urgency to achieve multiple objectives for the river in order to restore the river's value and highlight its importance. The restoration of the river to reach all of the goals is attainable if sufficient prioritization and funding is secured for the river. This report recommends that a comprehensive approach be used to achieve the greatest benefit at the least cost, and lays out a framework for its application.

TABLE OF CONTENTS

		Page
	Chapter 1: Introduction	1
1.1	Study Authority	1
1.2	Background	1
1.3	Purpose and Scope	2
1.4	Study Area	2
1.5	Agencies Involved	3
1.6	Approach	4
1.7	Prior Studies and Reports	6
1.8	Ongoing Studies and Investigations	9
	Chapter 2: Description of the Study Area	15
2.1	Watershed Description	15
2.2	Historic Resources	15
2.3	Biological Resources	16
	Chapter 3: Problem Identification	19
3.1	Water Quality	19
3.2	Sediments	22
3.3	Streamflows	23
3.4	Dams	25
3.5	Waterfowl Habitat	28
3.6	Anadromous Fish	29
3.7	Recreation and Aesthetics	31
3.8	Interrelationship of Problems	32
	Chapter 4: Evaluation of Potential Solutions	33
4.1	Objectives and Constraints	33
4.2	Formulation and Evaluation Criteria	34
4.3	Major Questions	35
4.4	Potential Solutions and Their Effects on Objectives	39
4.5	Potential Site-Specific Solutions	43
4.6	Agency Views and Preferences	46

TABLE OF CONTENTS (Continued)

	Chapter 5: Steps to Achieving Objectives	49
5.1	Re-Establish a Healthy and Diverse Aquatic Environment	49
5.1.1	Water Quality	49
5.1.2	Sediments	52
5.1.3	Streamflows	54
5.1.4	Dams	55
5.2	Enhance Waterfowl Habitat	56
5.3	Restore Anadromous Fish	58
5.4	Improve Recreational Opportunities and Experiences	61
	Chapter 6: Comprehensive Planning	63
	Chapter 7: Responsibilities/Plans of Action	67
7.1	Re-Establish a Healthy and Diverse Aquatic Environment	67
7.1.1	Water Quality	67
7.1.2	Sediments	68
7.1.3	Streamflows	69
7.1.4	Dams	70
7.2	Enhance Waterfowl Habitat	70
7.3	Restore Anadromous Fish	71
7.4	Improve Recreational Opportunities and Experiences	72
	Chapter 8: Estimated Costs/Potential Funding Sources to Achieve Goals	73
	Chapter 9: Summary	81
	Bibliography	83
	Acknowledgements	85

Appendices

Appendix A: Dams
Appendix B: Waterfowl Habitat
Appendix C: Anadromous Fisheries
Appendix D: Risk Assessment
Appendix E: Cost Estimate for Repairing Fisherville Pond Dam
Appendix F: Correspondence with Rhode Island National Register officials regarding fish passage facilities at historic dams
Appendix G: Scope of Work for the Blackstone River Watershed Water Quality and Anadromous Fisheries Restoration Study

Chapter 1: INTRODUCTION

1.1 Study Authority

Authority for the Section 22 "Planning Assistance to States", program is contained in the Water Resources Development Act of 1974, Public Law 93-251, as amended. This program authorizes the US Army, Corps of Engineers (Corps) to cooperate with the states in the preparation of plans for the development, utilization, and conservation of water and related land resources. Section 319 of the Water Resources Act of 1990, Public Law 101-640, authorizes the Secretary of the Army to collect from non-federal entities, fees for the purpose of recovering fifty percent of Section 22 program costs.

The Commonwealth of Massachusetts, Executive Office of Environmental Affairs, Department of Fisheries, Wildlife, and Environmental Law Enforcement (DFWELE) and the State of Rhode Island, Department of Environmental Management (RIDEM), the non-federal cost sharing partners, and the Corps, New England Division entered into separate Cost Sharing Agreements to conduct this study. The agreement with DFWELE was signed in August 1993; the agreement with RIDEM was signed in September 1993. The Blackstone River Valley National Heritage Corridor Commission contributed funds to the study through the State of Rhode Island. The study was also conducted in cooperation with the Coastal America Initiative.

1.2 Background

The Blackstone River Valley region has long been recognized for its historic significance in the birth of the American Industrial Revolution. In 1986, Congress passed legislation to establish the Blackstone River Valley National Heritage Corridor in Massachusetts and Rhode Island for the purposes of preserving the significant national heritage contribution of the region and to provide a management framework to assist state and local governments in the development and implementation of management programs to retain and enhance the corridor.

The States of Massachusetts and Rhode Island and others are interested in resolving the water quality problems of the river and ultimately improving its overall resource value. Some of the states' primary concerns include waterfowl habitat improvement and anadromous fish restoration. It is noted that there has been significant study of the various problems and

opportunities of the Blackstone River, but most have been either site-specific or limited to single issues. The States and the Heritage Corridor Commission recognize that a comprehensive plan is required to look at the interrelated problems of the watershed, identify and summarize the results of prior investigations of these problems, and outline a course of action to achieve the goal of restoring the resource value of the Blackstone River. Because of its extensive experience in water resources planning, the Corps was requested to prepare the framework of the comprehensive plan.

1.3 Purpose and Scope

The primary purpose of this study is to develop a framework for a comprehensive plan to achieve various water quality and environmental restoration goals for the Blackstone River including waterfowl habitat improvement and anadromous fish restoration. Due to time and funding constraints, the study is limited to the mainstem River. The comprehensive plan identifies the problems of the river, discusses potential solutions to the problems, and describes the envisioned goals and the steps required to achieve them. The plan also identifies the steps that have been taken to date and those which still need to be accomplished, and describes the estimated costs, potential funding sources and programs which may be available to address the problems.

Other purposes of this study are to document preliminary efforts pertinent to the provision of fish passage facilities at dams on the lower reach of the Blackstone River and to provide information on the anadromous fish species targeted for restoration. Another purpose is to identify actions that could be taken to improve waterfowl habitat on the Blackstone River and to provide information on the waterfowl species.

Outside of the scope of this investigation are land use and river access issues as they are the purview of the state planning and regulatory agencies. Land issues include the cleanup of the numerous hazardous waste sites along the river.

1.4 Study Area

The Blackstone River area has been designated as a National Heritage Corridor, a special type of national park created in recognition of the area's significance as the birthplace of the American Industrial Revolution (see Figure 1, Map of Blackstone River Basin). The

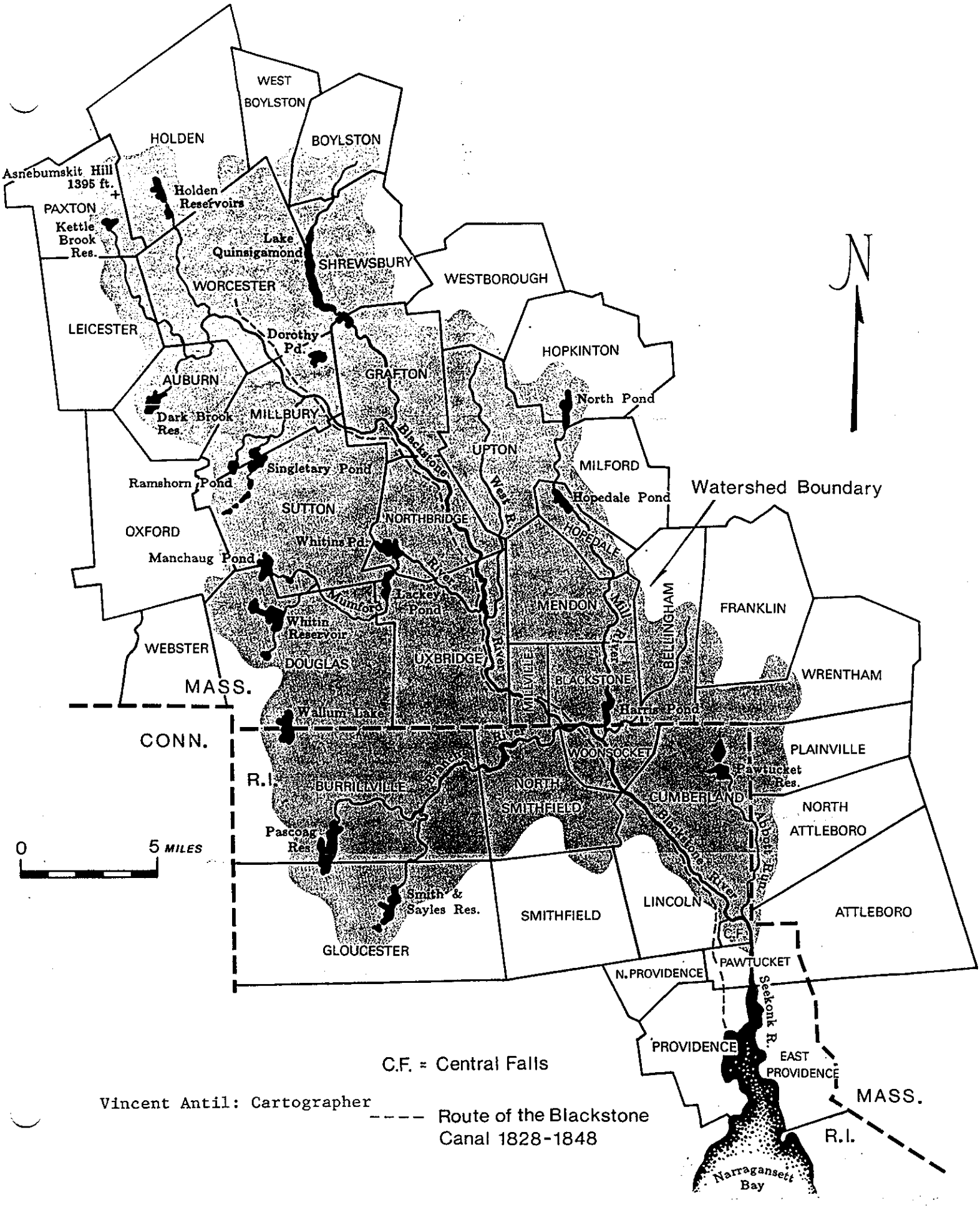

Figure 1 - Map of Blackstone River

Corridor currently includes 250,000 acres, whole cities and towns, dozens of villages and a half-million people, and may soon be expanded to incorporate an even greater area and population. The National Park Service (NPS) is in the process of developing trails, brochures, recreational and interpretive programs along the river. In addition, NPS, the Rhode Island Department of Transportation, and RIDEM are working together to develop a bikeway along the river.

The Blackstone River itself was once called "the hardest working river in America" because all but 30 of its 430 feet of vertical fall was utilized for waterpower. The Blackstone River is the central focus of the Corridor since it was the harnessing of the river and its tributaries for waterpower that fueled the highly successful industry of the nineteenth century. The river and its tributaries also support significant wildlife and vegetation habitats and provide an important link of continuous recreational and educational experiences.

Contributing to the unique character of the Blackstone River is the historic Blackstone Canal, and its associated locks, constructed in the 1820's to carry passengers and freight between Worcester and Providence and to facilitate boat passage around the river's numerous falls. The canal helped these cities become the second and third largest in New England. The canal quickly lost its usefulness however, upon the advent of the faster and more reliable Providence and Worcester Railroad in 1847. Only 6 miles of the historic canal remain watered, however, the towpath still exists in at least one other reach, south of Millville Lock, where the river served as the canal.

Besides the National Heritage Corridor itself, there are two state parks along the Blackstone River: The Blackstone River and Canal Heritage State Park in Massachusetts and the Blackstone River State Park in Rhode Island. There are also a number of community-owned parks along the river in both states.

1.5 Agencies Involved

Agencies currently involved in studying and protecting the Blackstone River include the U.S. Environmental Protection Agency (USEPA), the Army Corps of Engineers, the U.S. Fish and Wildlife Service (USFWS), Massachusetts' Departments of Environmental Protection (MADEP), Fisheries, Wildlife and Environmental Law Enforcement (DFWELE) and Environmental Management (MADEM), RIDEM, the Massachusetts Audubon Society,

Save the Bay, the Narragansett Bay Project, the Blackstone Valley Tourism Council, and others.

A comprehensive, but somewhat out of date (October 31, 1990), list of agencies and organizations involved with the Blackstone River, and their efforts and responsibilities, is provided in a report prepared by DFWELE entitled "Agencies, Organizations and Others that are Currently and/or Potentially Involved in Promoting Environmental Quality Within the Blackstone Watershed".

1.6 Approach

The approach taken in this study was as follows:

1. A literature search of significant prior studies and reports was performed. Key findings were summarized (see next section of this report).

2. The river was inspected.

3. An information exchange meeting ("kickoff meeting") was held with government and private interests to discuss study direction and strategy, problems to be examined, and to identify key persons knowledgeable of the river's problems.

4. Knowledgeable parties were interviewed order to obtain a clear understanding of the river's problems and to discuss potential solutions to the problems. Personnel from EPA, USFWS, MADEP, DFWELE, RIDEM, URI and the BRVNHCC provided significant input.

5. An identification was made of the problems, goals and objectives for the river, and the major questions which remain to be answered. The interrelationships of the various problems were also noted.

6. A progress meeting was held halfway through the project to update participants on the findings, status, and project direction.

7. Steps to attaining individual objectives were identified, as well as a determination made of what's been done and what still remains to be done.

8. Costs of various tasks were preliminarily estimated with the understanding that as the remaining major questions are answered, the approach to solving the problems may change, significantly altering these costs. Available programs and potential funding sources for accomplishing the steps were identified.

9. A framework for a comprehensive plan for achieving the various goals for the river was described.

Several additional tasks outlined in the study Scope, which were not part of the effort to develop the planning framework, were performed. The Corps installed staff gages in the tailwaters of the four most downstream dams on the Blackstone River, surveyed the gage elevations relative to the spillway crests, obtained gage readings on several days, and obtained 2-foot contour maps (1"=80') and cross-sections through the dams and the powerhouses. The purpose of these efforts was to facilitate the U.S. Fish and Wildlife Service's preparation of a conceptual design of anadromous fish passage facilities at the four lower dams. The Corps obtained copies of the FERC licenses to ascertain requirements pertaining to future fish passage facilities at the hydropower dams.

Cost estimates provided in various dam safety reports for Fisherville Pond Dam were reviewed to determine an approximate cost for repairing the dam. Fisherville Pond Dam was investigated because it formerly created the very important Fisherville Pond waterfowl habitat area (when it is not drained, as at present). Because cost information on the embankment portion of the dam was virtually non-existent, the Corps inspected the embankment and developed a cost estimate for its repair (see Appendix E).

Information on the river's many dams and hydropower plants (see Appendix A) was compiled because the data was believed relevant to assess the magnitude of the river's problems. The data was obtained from the Federal Energy Regulatory Commission (FERC), USFWS, Corps and state dam inspection reports, and other sources.

A cursory examination of the FERC permits was performed to determine minimum flow bypass and other hydrologic operating criteria imposed by FERC upon hydropower facilities. Streamflows measured at the USGS Woonsocket gage were preliminarily analyzed in order to assess the magnitude of the hydrologic problems of the river.

Information was compiled on the life histories of the targeted species of anadromous fish, potential habitat areas were identified, future population sizes were estimated, and anadromous fish restoration plans for rivers in the northeast United States were reviewed. Similar information on waterfowl and their habitat areas was compiled.

1.7 Prior Studies and Reports

There are a multitude of reports available, primarily from the state regulatory and planning agencies, that address water quality, wastewater discharges, biological information, and management of the Blackstone River. Some of this information may be out of date, in light of the relatively recent changes in water quality due primarily to better wastewater treatment. The state agencies should be contacted directly for these reports. In addition, many or all of the communities abutting the river have their own Comprehensive Plans, mainly dealing with land use and river access. The communities should be directly contacted for these plans. The reports summarized below are those believed to be the most significant and comprehensive reports addressing the Blackstone River's problems.

1. *"A Sediment Control Plan for the Blackstone River", prepared by Joseph M. McGinn of the Massachusetts Department of Environmental Quality Engineering (DEQE), Office of Planning and Program Management, July 1981.*

The report, referred to as the "McGinn report", documented a major DEQE effort in the early 1980's to the issue of contaminated sediment at several Blackstone River sites and one tributary site (all in Massachusetts). The report described the levels of metals in sediment found by CE Maguire, Inc. in 1981 (Ref: "Bottom Deposit Removal and/or Control Alternatives for the Blackstone River", prepared by CE Maguire, Inc. for DEQE, March 1981), locations of sediment accrual, sediment volumes, impacts of the sediment on river ecology, and alternatives available to eliminate or mitigate the adverse impacts. The McGinn report also examined sediment quality guideline criteria developed for various areas/applications, previous Blackstone River water quality and fish sampling studies, the results of sediment chemistry sampling and elutriate analysis performed by the Central Massachusetts Regional Planning Commission in the mid-1970's (208 Water Quality program, published in 1976) for several of the same sites (yielding similar results as CE Maguire's), and the results of bioassays performed in 1980 by EPA using sediments from four Massachusetts impoundments. McGinn attempted to assess the relative degree of contamination at each site using a "Sediment Pollution Index" not necessarily related to sediment toxicity. The McGinn report recommended a comprehensive $35.6 million sediment management plan for the Massachusetts sites. None of McGinn's study recommendations have been adopted on any of the mainstem sites.

2. *"Blackstone River Watershed", Main Report and Appendices, U.S. Army Corps of Engineers, August 1981.*

This report addressed flooding problems of the Blackstone River watershed, and described existing and proposed flood control measures. None of the proposed solutions have been implemented.

3. *"Bring Back the Blackstone", Save the Bay, Providence RI, undated (1989 or 1990).*

This report discussed the water and sediment quality problems of the river and made several recommendations concerning the significant discharges of the Upper Blackstone Water Pollution Abatement District's (UBWPAD) wastewater treatment plant, actions related to the contaminated sediment, the need for cooperative action, and the minimization of additional water withdrawals from the Blackstone River. Several of the recommendations were adopted. This report, along with those prepared by the Narragansett Bay Project (NBP), was instrumental in bringing about the Blackstone River Initiative (refer to Ongoing Studies and Investigations).

4. *"Agencies, Organizations and Others that are Currently and/or Potentially Involved in Promoting Environmental Quality Within the Blackstone Watershed", prepared by Russell Cohen of the DFWELE, October 31, 1990.*

The report identified key players and agencies on the river, and described their activities. The report has been incorporated into Appendix 4 of NBP's "Briefing Paper - Blackstone River".

5. *Metcalf and Eddy, Inc., 1991 "Assessment of Toxic Pollutants in Narragansett Bay", draft report to NBP.*

This report was not reviewed. It may shed some light on the impacts of the Blackstone River on Narragansett Bay.

6. *"Narragansett Bay Project (NBP) Briefing Paper - Blackstone R.", prepared by Katrina Kipp and Richard Zingarelli, June 1991.*

This report was a technical document that described many of the problems of the Blackstone River, and made several recommendations that were incorporated into the Comprehensive Conservation and Management Plan for Narragansett Bay. The Blackstone River was examined by NBP because of the significant pollution loadings contributed by the

Blackstone River to Narragansett Bay. The report reviewed point source discharges, identified water quality problems, and ranked the impacts of various pollutants on Narragansett Bay. The report noted the need for synoptic river-wide water quality measurements.

7. *"Problem Assessment and Source Identification and Ranking of Wet Weather Discharges Entering the Providence and Seekonk Rivers", Executive Summary, Dr. Wright of URI, Nov. 1991.*

This report highlighted the fact that the Blackstone River is first or second in ranking for loads to the Providence River for most parameters for both dry weather and wet weather events. Annual total suspended solids at the mouth of the Blackstone River, at Slater Mill, under "average" conditions were estimated for both dry weather and its wet weather components. Loads for organic compounds were also estimated.

8. *"Blackstone River 1990", NBP-92-85, Dr. Wright et al. for the Narragansett Bay Project, December 1991.*

This major technical report provides a summary and analysis of all major water quality sampling efforts through 1990 for the mainstem Blackstone River considered representative of current water quality conditions. The single-state sampling efforts examined in this report were a 1985 dissolved oxygen survey by Massachusetts, a 1987 dissolved oxygen survey by RI, a 1989 trace metals survey by Massachusetts, a 1985 trace metals and organics survey by RI, 1988 and 1989 wet weather studies of trace metals and inorganics by RI, and the 1985-1987 measurements of various constituents at Slater's Mill. Since operational changes had occurred throughout the 1980's at some of the wastewater treatment facilities, older water quality data was not examined. The report compared measured and predicted low flow concentrations of several water quality parameters to water quality standards. The report also compared the Blackstone River's dry weather load of various parameters to Upper Narragansett Bay to that of other rivers discharging to the Bay. A similar comparison was made for the total wet weather loading of various parameters to the Bay for three monitored storms. A comparison of the wet weather loads of various parameters from each of the two contributing states was made by comparing the loads measured at Slater Mill to those measured upstream at the state line during two storms.

The report discussed limitations of the water quality data for use in a river-wide water quality model due to the fact that data was collected at different locations, times and streamflows, and because of continuing changes in dischargers, treatment methods and diversions. The lack of a synoptic river-wide water quality modelling was found to be hindering sound management of the river. Wright's report recommended synoptic water quality surveys of the entire Blackstone River during both dry and wet weather conditions. This recommendation resulted in the push for the Initiative sampling efforts.

9. *"Commonwealth of Massachusetts Summary of Water Quality 1992" (305b report), Massachusetts DEP, Division of Water Pollution Control, Technical Services Section, Nov., 1992, and "State of Rhode Island and Providence Plantations, The State of the State's Waters - Rhode Island, a Report to Congress" (PL 92 - 500, 305b report), RIDEM, Division. of Water Resources, August 1992.*

These reports summarize water quality issues, compliance, and data of various river segments in each state.

10. *"Comprehensive Conservation and Management Plan for Narragansett Bay" (CCMP), EPA, NBP, RIDEM, and RI Dept. of Administration, Final Report, December, 1992.*

EPA created the NBP in 1985 as part of its National Estuary Program. NBP spent six years developing a plan to improve the Bay's quality of water, manage its living resources, and preserve its public uses. The CCMP provides a blueprint for immediate and long-term actions to be taken by federal, state, and local agencies and authorities well into the next century. The CCMP identifies the Blackstone River as one of two "Areas of Special Concern" due to its importance to the Bay and provides several recommendations specific to the Blackstone, including the development of a comprehensive sediment remediation plan with an estimated implementation cost of $144 million.

11. *Cultural Heritage and Land Management Plan for the BRVNHCC, revised April 1993.*

1.8 Ongoing Studies and Investigations

1. *Blackstone River Initiative, EPA, MADEP, RIDEM, URI, 1990 to present.*

In 1990, the U.S. Environmental Protection Agency (EPA) Region I, organized the "Blackstone River Initiative" at the request of the commissioners of the Massachusetts Department of Environmental Protection (DEP) and Rhode Island Department of Environmental Management (RIDEM), in part due to the prompting of those involved with RI's Narragansett Bay Project and Save the Bay. The Initiative was established primarily to determine causes of the river's contamination and to facilitate future decision making regarding pollution controls and abatement in the Blackstone River basin. Participants in the Initiative include EPA, the Massachusetts DEP's Office of Watershed Management (formerly the Division of Water Pollution Control), RIDEM, and the University of Rhode Island. A major portion of the Initiative was to conduct dry weather and wet weather surveys of the river. The Initiative's work includes an up-to-date comprehensive analysis of the toxicity and chemistry of ambient river water, sediments, sediment pore water, significant industrial and municipal water effluent, and a benthic macroinvertebrate community health analysis for several locations on the Blackstone River and selected tributaries. The oxygen demand of the

sediments at various locations was determined. Aerial photographs of the entire river were also obtained.

The synoptic dry weather measurements obtained from July 1991 to October 1991 as part of the Initiative are being used in the development and calibration of water quality computer models for the entire mainstem Blackstone River using the EPA's QUAL2E model (to model dissolved oxygen dynamics) and the URI-developed PAWTOXIC model (to model the fate of trace metals). The dry weather measurements will be used to determine the significance to the Blackstone River of tributary and point source discharges that dominate its water quality during low streamflows. The synoptic wet weather measurements, made during the time period of September 1992 to October 1993, will be used to determine the water quality impacts from stormwater runoff and the resuspension of contaminated sediment. This data, when coupled with streamflows, will be used to estimate dry weather versus wet weather loadings for several pollutants. The Initiative performed additional sediment sampling in December 1993. Results of the Initiative are largely unpublished to date. Dry weather data was published in "Blackstone River Initiative, Phase I: Dry Weather Assessment Interim Report of Data", U.S. EPA Region I, 1991, and "Blackstone River Initiative, Phase I: Dry Weather Assessment Interim Report of Data - Appendices" U.S. EPA, Region I, 1991. A paper entitled "A Comparison of Aquatic Toxicity in the Blackstone River of Massachusetts and Rhode Island During Wet and Dry Weather" was presented by the EPA Region I Laboratory at the 1993 Conference of the Society of Environmental Toxicology and Chemistry and at the 1994 New England Association of Environmental Biologists meeting. This paper remains to be published. The results of all of the wet weather and sediment work are expected to be published in early 1995.

2. *Massachusetts Department of Environmental Protection's Office of Watershed Management, investigation of potential solutions at Rice City Pond, 1993 to present.*

The Massachusetts Department of Environmental Protection's Office of Watershed Management (OWM) is examining potential solutions to problems at Rice City Pond, located on the Blackstone River in Uxbridge, Massachusetts. The effort is being funded by a Section 319 non-point source pollution grant. OWM has found a subsurface petroleum layer varying from six inches to several feet in depth that appears to be located throughout the formerly-impounded pond area (the dam was previously three feet higher than at present). Because of the high estimated cost of removing this petroleum layer, OWM has ruled out dredging as a remediation option. Options still deemed potentially feasible include wetland restoration and flow regulation to reduce the "flashiness" of the river and minimize sediment resuspension. Impounding of the area at shallow depths, through the use of flashboards or something more substantial, may be included as an additional treatment method for suspended solids. Also included may be some type of bank stabilization since bank "sloughing" is prevalent, and bank scour is apparently a factor in sediment resuspension.

3. *Dr. John King of the University of Rhode Island, 1990 to present.*

Dr. John King of the University of Rhode Island analyzed sediments obtained through corings taken in 1990 at three Massachusetts and one Rhode Island sites in order to determine sediment chemistry at various depths below the sediment surface. The purpose of the study, performed for the Narragansett Bay Project, was to determine if there is a relationship of contamination versus sediment depth, and if contamination levels can be tied to historic use changes. The main finding was that, although less contaminated than deeper layers, the top sediment layers are still very contaminated. Only the data was published in 1991. A report containing conclusions may be forthcoming.

4. *Blackstone River Anadromous Fish Restoration Task Force, 1993 to present.*

The Blackstone River Anadromous Fish Restoration Task Force, established by RIDEM's Division of Fish, Wildlife, and Estuarine Resources (RIDFWER) in early 1993, has been meeting semi-annually to discuss the issues associated with the restoration efforts. The primary mission of the task force is to consolidate and coordinate the individual efforts of various state, federal, and local organizations that are interested in the restoration and management of fish populations in the Blackstone River. The task force has open-ended membership and includes representation from a variety of interests, including the Massachusetts Division of Fisheries and Wildlife.

In the spring of 1993, RIDFWER released approximately 3,000 adult anadromous fish (blueback herring) just downstream of Albion Dam. The fish were obtained from the Charles River via a cooperative effort with the Massachusetts Division of Marine Fisheries. The August 1993 recovery of juveniles above Valley Falls Dam demonstrated successful natural reproduction by the stocked adults.

5. *Massachusetts Department of Environmental Protection's Office of Watershed Management, fish tissue sampling, 1993 to present.*

Massachusetts DEP's OWM conducted fish sampling at 4 mainstem ponds and one off-stream pond in July 1993 in order to obtain and analyze the fillets of various fish species for several parameters. The mainstem ponds sampled for fish were Fisherville, Riverdale, Rice City, and Tupperware. Parameters examined were metals, PCBs, and organochlorine pesticides. Polyaromatic hydrocarbons were not examined. Results are not yet published, however, preliminary results indicate low levels of metals and pesticides in the fish tissues. However, somewhat elevated levels of PCBs were found, particularly in the benthic feeders. OWM did not attempt to determine the relative abundance of the various fish species, representative age structure, or determine the types of fish that would be expected to be found in the various river habitats; therefore the study can be considered limited with regards to species composition and relative abundance.

6. *Ocean State Power, finfish monitoring, 1994 to present.*

Ocean State Power, a private utility company that diverts water from the Blackstone River in Woonsocket, RI is conducting a 10-year study to monitor and evaluate the status of the existing fishery resources in the vicinity of its withdrawal as required by its permit. OSP will provide yearly updates on their efforts, that began in 1994.

7. *U.S. Environmental Protection Agency, Contaminated Sediment Management Strategy, 1989 to present.*

EPA's national contaminated sediment management program is in the process of establishing numeric criteria for sediments nationwide to indicate whether the sediment is contaminated or not. The only criteria generated to date are for three polyaromatic hydrocarbons and two pesticides. In addition, EPA is developing a sediment management strategy that will propose prevention, control, and remediation programs, and will consider specific actions that EPA could take to reduce ecological and human health risks posed by the contaminated sediments. A draft report entitled "EPA's Contaminated Sediment Management Strategy", EPA 823-R-94-001, was published in August 1994 for public review and comment.

8. *U.S. Department of Agriculture Resource Conservation and Development Area, "bioengineering" demonstration project, June 1993 to present.*

The US Department of Agriculture Resource Conservation and Development Area's "bioremediation" demonstration project was implemented in June 1993. This project was funded by the state of Massachusetts as a Section 319 grant. One of the two demonstration project locations is on the Mumford River, a Blackstone River tributary; the other is not in the Blackstone River basin. Originally, it was intended that the demonstration project would include a mainstem Blackstone River site, but reportedly the contractor on the project was concerned with the contaminated streambanks and a site on the Mumford River was chosen instead. The project involved the placement and tieing down of wattles (live and dead dogwood and willows) on the banks of the river with the purpose of preventing the bank sediments from eroding. Various entities, including the Narragansett Bay Project (Ref: CCMP), have stated that the findings of this study could have potential applications to the problem of contaminated sediment in the Blackstone River. The placement of wattles on the banks of the river could potentially prevent the further erosion of contaminated sediments from the banks. However, because the wattles were not placed at or near the water surface, the applicability of the demonstration project to stabilization of sediments below the water surface is questionable.

9. *Miscellaneous studies.*

There have been various projects investigating the reduction of source loads to the wastewater treatment plants and the pre-treatment of source loads (such as Northbridge's "Toxic Diet" program and the Upper Blackstone Water Pollution Abatement District's voluntary project with the Massachusetts Office of Technical Assistance), and studies concerning non-point source pollution, however, as these studies fall within the jurisdiction of the regulatory agencies, they are considered outside of the scope of the framework presented in this report, and are not summarized.

Chapter 2: DESCRIPTION OF THE STUDY AREA

2.1 Watershed Description

The Blackstone River begins in the southern part of Worcester, Massachusetts at the confluence of the Middle River and Mill Brook and flows southeasterly for 45 miles to the Main Street Dam in Pawtucket, Rhode Island (see Figure 1). Below the Main Street Dam is the tidal Seekonk River, which in turn flows south to the Providence River, a northern arm of Narragansett Bay (see Figure 2 for a schematic representation of the river). The Blackstone River has a drainage area of 540 square miles, with 382 square miles in south central Massachusetts and 158 square miles in northern Rhode Island. Total fall over its entire length is approximately 440 feet, with an average 10 feet/mile. Roughly 84 percent of the Blackstone's length is within either urban areas, including the major cities of Worcester, Massachusetts and Woonsocket, Rhode Island, or mill villages. Several tributaries of the Blackstone run through heavily urbanized areas: Mill Brook, and the Middle, Quinsigamond, Mumford, Branch, Mill, and Peters rivers and Abbot Run. The Blackstone River is the second largest freshwater source to Narragansett Bay, providing almost one-fourth of its freshwater input (Ref: RI's 305-b report). Only 17 dams and impoundments presently remain on the mainstem Blackstone of the approximately 45 dams which existed at one time. Significant dischargers to the river include Worcester's Upper Blackstone Water Pollution Abatement District Wastewater Treatment Plant and the Woonsocket Wastewater Treatment Plant. The permitted discharges of these facilities represent approximately 92 percent and 20 percent, respectively, of the flow of the river at their respective discharge points during 7Q10 low flows (i.e. the lowest flow conditions experienced during seven consecutive days for an average 10-year period).

2.2 Historic Resources

The Blackstone River is best known as "the birthplace of the American Industrial Revolution". The Blackstone River originally attracted industry because of the water power potential of the river. Dams were built to capture this energy and convert it to mechanical power for industry. Samuel Slater established the first successful water-powered cotton mill along the Blackstone River in Pawtucket in 1793, with many other mills and dams soon following. By the 1830's, there was one hydropower dam for every mile of river. Many of these dams still stand, some still being utilized for hydropower generation, but many have long since lost their original purpose.

The historic resources of the river include the dams, canals and locks that can be found in and along the river. Only six miles of the historic Blackstone Canal remain watered. Many of the physical features currently are registered on the National Register of Historic Places. Public Archaeology Laboratory, a private consulting firm located in Pawtucket, Rhode Island, is presently studying the inclusion of the Massachusetts' portion of the Blackstone Canal on this Register, with RI's portion already listed. An extensive amount of information on historic resources of the river can be found in documents published by the Blackstone River Valley National Heritage Corridor Commission, the National Park Service, the state historical agencies, and others.

2.3 Biological Resources[1]

Despite generations of development and change, the Blackstone River Valley hosts a rich array of natural resources evident in its rivers and tributaries, wetlands, farms, forests, and fields. The basin supports a wide diversity of terrestrial and aquatic wildlife and vegetation habitats.

Through their Natural Heritage Programs, Massachusetts and Rhode Island have identified sites of statewide significance that shelter threatened or endangered species and important natural communities. Massachusetts has identified fifteen of these sites in the upper Blackstone River valley (i.e. primarily in the upper tributaries) where thirteen varieties of rare plants and animals have been sighted. The Valley Falls (Lonsdale) Marshes within the communities of Lincoln, Cumberland and Central Falls is the only site designated within the Blackstone River corridor in Rhode Island as habitat for rare species.

The North American Waterfowl Management Plan has identified the Blackstone River corridor as an important flyway for migratory waterfowl and one of the last significant black duck production areas in Worcester County, Massachusetts. The Valley Falls Marshes are considered to be the most valuable wetland wildlife habitat in northern Rhode Island, and have been identified as one of fourteen statewide priority sites. The area provides nesting habitat for waterfowl and several of the rarer marsh-nesting birds including Least Bittern and Sora Rail. The Valley Falls Marshes also provides feeding and resting habitat for migratory waterfowl which can number 500-1000 birds during spring and fall migration periods.

[1] The discussion of biological resources is a summary of the detailed information presented in the Waterfowl Habitat and Anadromous Fisheries Appendices, B and C, respectively. All references are cited and listed in the Appendices.

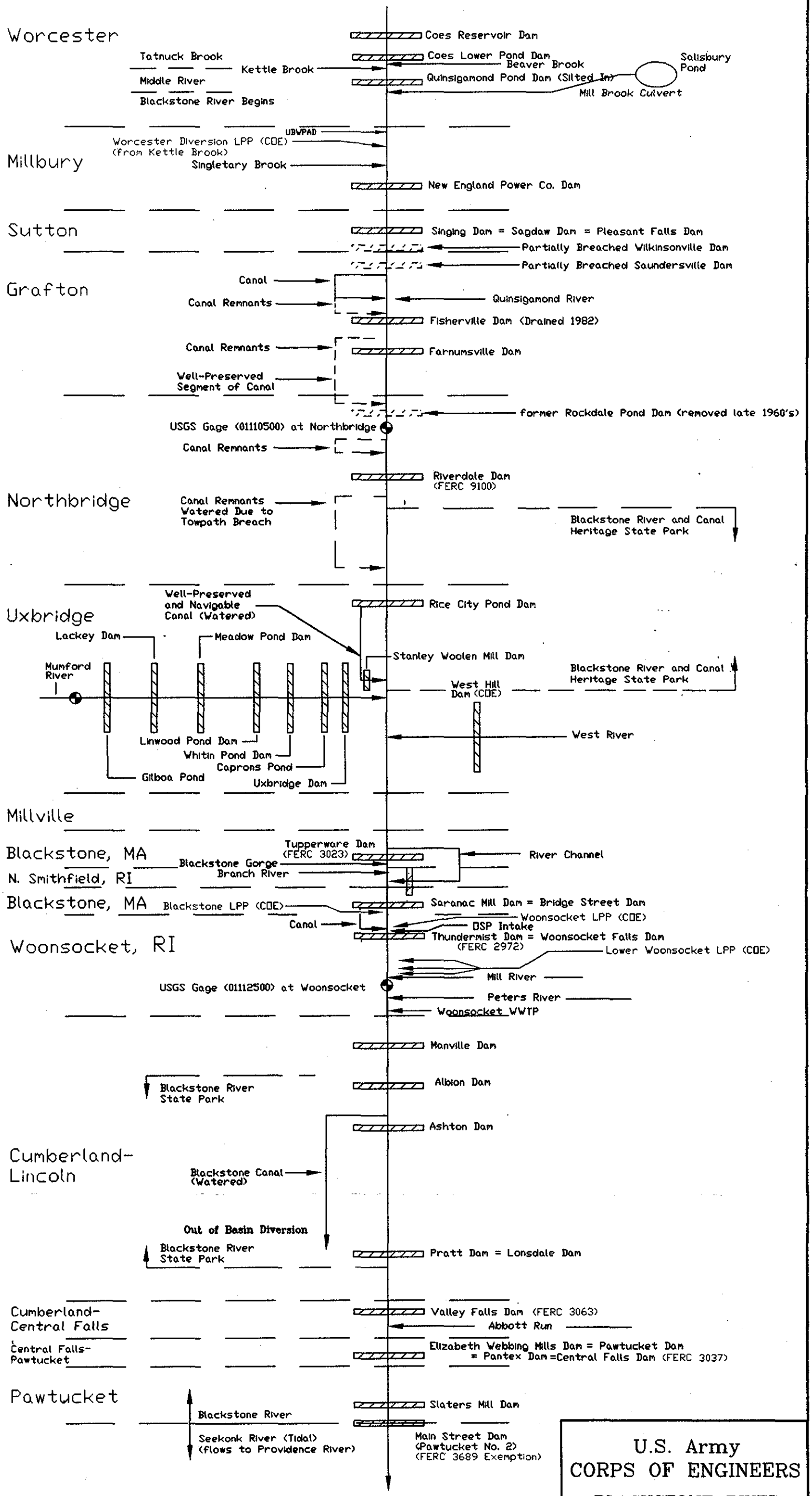

U.S. Army
CORPS OF ENGINEERS

BLACKSTONE RIVER
SCHEMATIC

NOT TO SCALE September 1994

Figure 2

Historically, the Blackstone River and its tributaries supported spawning runs of anadromous species of fish including American shad, alewife, blueback herring, and Atlantic salmon. Unfortunately, the extensive construction of dams for water power in the late 1700's and 1800's prevented these migratory fish from returning to the river's historical spawning and nursery habitat areas and consequently eliminated these runs in the Blackstone River.

The existing information on resident fishery resources in the Blackstone River in Rhode Island and Massachusetts is limited. Comprehensive fisheries surveys of the Blackstone River Watershed were conducted by the Rhode Island Division of Fish and Wildlife in 1975 and the Massachusetts Division of Fisheries and Game in 1973. Twenty-one sampling stations including three on the mainstem of the Blackstone River and thirty-two sampling stations including five on the Blackstone mainstem were surveyed by Rhode Island and Massachusetts, respectively. A fisheries survey of the Blackstone River was also conducted in May 1981 in a cooperative effort by the Massachusetts DEQE and Division of Fisheries and Wildlife as part of the previously described "Sediment Control Plan for the Blackstone River" study (McGinn 1981). Seven sites located on the mainstem of the Blackstone River and one site on the Mumford River were surveyed.

Additional but limited fisheries data is also available from more recent site-specific surveys conducted in the Blackstone River for various purposes (e.g. in the vicinity of Woonsocket, Rhode Island, for the Ocean State Power water withdrawal; fish toxics monitoring in Massachusetts by OWM). The earlier surveys indicated that the fishery resources present were generally typical of warm water habitats, however, the species found were only those capable of surviving in poor quality waters resulting in resident fish populations that were undesirable for sport fishing. Results of a biomonitoring survey of the Blackstone River and selected tributaries undertaken by the Massachusetts Division of Water Pollution Control's Technical Services Branch as part of a June 1985 water quality investigation revealed benthic macroinvertebrates that indicated some of the worst water quality to be found in Massachusetts inland streams.

Recent fish community surveys reflect improvements in water quality. While the fishery is still characteristic of warm water habitats, there is a greater number of game species present. Some of these species (e.g. yellow perch, white perch, largemouth bass, smallmouth bass, black crappie, chain pickerel, and northern pike) are more typical of better

water quality conditions. In 1994, the Blackstone River in Rhode Island was stocked by the RI Division of Fish, Wildlife, and Estuarine Resources (RIDFWER) on three separate occasions with a total of 2285 adult brown trout, a cold water habitat species. The improved water quality and observed productivity indicated some potential for a quality fishery. The primary limiting factor appears to be the relatively high water temperatures reached during the summer months. Public opinion of the program has been favorable with RIDFWER receiving positive comments throughout the fishing season. During prolific hatches of caddis flies, many people were observed fishing with fair success. The fish appeared to be in good condition. The summer survival will be evaluated during the fall of 1994.

Reintroduction of anadromous fishes to their previous spawning grounds in the Blackstone will also have a positive effect on the ecology of the river. In freshwater areas where herring have been restored, studies show that resident fish populations were enhanced. The juvenile herring produced in the spawning run serve as a food supply for bass and other resident species. All life stages of anadromous herrings are important forage for many freshwater and marine fishes. In addition, birds, amphibians, reptiles and mammals have also been documented as predators. The mortality of anadromous alewives provides an important source of nutrients for headwater ponds.

Macroinvertebrate population data collected in 1991 as part of the Blackstone River Initiative, when compared to macroinvertebrate community data collected in 1985, showed improvements at most stations (USEPA et al. 1991). Additional improvements in macroinvertebrate populations are expected due to the Upper Water Pollution Abatement District wastewater treatment plant's adding dechlorination of its wastewater in the fall of 1993.

Chapter 3: PROBLEM IDENTIFICATION

The environmental problems of the basin are summarized in this chapter. The problems include degraded water quality and contaminated sediments, insufficient and variable streamflows, unsafe and deteriorating dams, degraded waterfowl habitat, an absence of anadromous fish, and degraded recreation and aesthetics. Discussion of each of the problems is provided below.

3.1 Water Quality

The water quality of the Blackstone River has long been poor due to the history of abuse during its lengthy industrial period when the river was heavily used for waste disposal. Contaminants discharged to the river included heavy metals from platers, oil and grease from machine shops, dyes and prints from textile plants, organics and metals from tanneries, organics from food processors, and municipal waste. In recent years, water quality of the river has improved dramatically principally due to the discontinuation of river dumping, improved wastewater and combined sewer overflow treatment, and the general decline of industrial activity along the river. Current sources of contamination include: the point source National Pollutant Discharge Elimination System (NPDES) discharges of wastewater treatment plants, the most significant of which are Worcester's Upper Blackstone Water Pollution Abatement District (UBWPAD) and the Woonsocket Wastewater Treatment Plant (WWTP); discharges by industrial facilities; and combined sewer overflows in Worcester, Central Falls and Pawtucket.

The river also continues to be impacted by non-point sources of contamination including the resuspension, from the river's bottom, of contaminated sediment to the water column, the leaching of contamination in the soil of the river's banks, the erosion of contaminated soil from the riverbanks, and by uncontrolled and untreated stormwater runoff from various areas, including landfills and junkyards abutting the river. Land use appears to play a major role in determining the quality of the water. The water quality problems of the Blackstone include pH, fecal coliform, dissolved oxygen, organics, several metals (lead, cadmium, copper, and chromium), and nutrients. The relative significance of the sources of these problems vary by location.

The numerous small dams/ponds, hydropower facilities and canals on the river significantly impact the Blackstone's water quality. The impoundments typically act as settling basins for nutrients and suspended sediments in the water column. Longer detention times associated with impoundments result in dissolved oxygen levels being adversely impacted due to increased exposure of water to the contaminated sediments oxygen demand. Impoundments are also typically associated with increased algae production and large diurnal swings in dissolved oxygen levels and pH. The spillways of impoundments reaerate the water. Turbines of hydropower facilities minimize reaeration to reduce cavitation problems. Canals impact water quality by reducing dilution flows in the river. Lower pond water levels, due to broken flashboards or because ponds have been drained, as in the case of Fisherville Pond, result in a faster water velocities, causing the underlying sediments to become resuspended, reducing water quality. At higher flows sediments are resuspended at a greater rate, although their impact on water quality is likely less due to greater dilution. Hydropower operations contribute to degraded water quality when turbines are suddenly turned on, reflushing sediments back into the water column.

The river is classified as a Class B warm water fishery in the 29 mile Massachusetts segment (suitable for protection and propagation of fish, other aquatic wildlife and wildlife, and for primary and secondary contact recreation) and as Class C in the 16 mile Rhode Island segment. Later this year, Rhode Island will propose upgrading the classification/goal of the Rhode Island segment to Class B to be consistent with the Clean Water Act's goal of all waters meeting swimmable/fishable uses. Rhode Island's Class B designation protects similar uses as those of Massachusetts' Class B.

The aquatic life water quality criteria (i.e. protective of aquatic life) for metals are more stringent than the human health criteria. The human health criteria (i.e. protective of human health) for organics, pesticides, and PCBs are more stringent than the aquatic life criteria. Human health criteria assume the use of the river for fishing and the associated consumption of fish. For swimming uses, the only applicable standards are for bacteria and turbidity. Bacteria is examined because it indicates disease potential; turbidity is examined for reasons of physical safety, since a person must be visible to be rescued. Water quality for much of the Blackstone's length is unsupportive of several of the river's designated uses. In addition to the water quality standards which protect human and ecological health, there are unquantifiable parameters that impact the river's appeal to users including the general aesthetics of the river (murky appearance including floating scum and debris) and offensive odors (e.g. sewage, chlorine and even petroleum). Degraded water quality also limits the

potential use of the river for drinking water supply and significantly limits wastewater assimilation potential, instead requiring more stringent treatment requirements with associated higher costs.

Narragansett Bay is also affected by the river's water quality, with contaminated dissolved and suspended solids in the river ultimately settling in the Bay. The northern arm of Narragansett Bay (the Providence River) is located only 7 miles downstream from the Main Street Dam, where the Blackstone River ends. The Blackstone has been identified as the principal source of solids, various metals and organics discharged to the Bay.

Until 1990, each of the two states had been independently attempting to solve its own Blackstone River water quality problems. In 1990, EPA formed the multi-state Blackstone River Initiative to obtain dry and wet weather water quality data required to model, assess and ultimately correct the river's water quality problems. The dry weather data may be used to assess the significance of point sources on water quality. The wet weather data can be used to assess the location and significance of non-point sources including runoff and resuspended sediment in addition to combined sewer outfalls and point source discharges, which may perform differently during wet weather conditions. The dry and wet weather findings can be compared to one another to shed light on various pollution sources' relative significance to Blackstone River water quality. A similar comparison can be made to determine the dry and wet weather impacts on Narragansett Bay.

Both state regulatory agencies are planning to use the Initiative's computer model results in the establishment of Total Maximum Daily Loads (TMDLs) for river segments predicted as violating water quality criteria. The TMDL process is different from the earlier modeling and wasteload allocation process designed to determine wastewater permit limits for point source dischargers under the critical conditions of simultaneous low receiving water flows and maximum permitted pollutant loads. The TMDL process will instead focus on the total amount of material from all sources, including point, non-point and background, that a river segment can accept and still meet the adopted water quality standards. Portions of the allowable load will be allocated to the various sources. Both the dry and wet weather data collected by the Initiative will be used in the development of TMDLs. Tighter NPDES standards are likely to follow for point sources causing water quality problems; best management practices may be implemented for non-point sources.

Toxicity tests performed by the Initiative indicated that river water during dry weather does not harm aquatic life, even for water samples that exceeded the acute ambient water quality criteria for metals. Exceeding acute criteria normally impacts aquatic life in a short (less than 96 hour) time span, with death of some of the aquatic life usually resulting. River water sampled during wet weather negatively impacted aquatic life at many locations in the river. Because the high metal concentrations in the river water during both weather regimes did not always kill the organisms when it exceeded the acute ambient water quality criteria, the Commonwealth of Massachusetts, with EPA's concurrence, will be investigating whether site-specific water quality criteria are appropriate for the Blackstone River. Rhode Island is currently leaving review of site-specific water quality standards up to the NPDES permittees themselves, although they have requested that EPA pursue an investigation into this matter. One theory hypothesized to explain the lack of apparent, but expected, toxicity is perhaps the occurrence of some form of contaminant "binding" which renders the contaminants biologically unavailable. The applicability of the national water quality standards adopted by the two states to the very low hardness Blackstone River water has also been questioned.

3.2 Sediments

The sediments of the Blackstone River are contaminated with heavy metals, organics and PCB's as a result of the river being used as a sewer during the river's lengthy industrial period. Many of the contaminants have settled out of the water column and adhered to the sediments, particularly in the impoundments where water velocities are low.

Sediment poses hazards in both its settled form and when it becomes resuspended in the water column. Adverse effects of the settled contaminated sediment include its oxygen demand on the water column, particularly in the impoundments where the water detention time is relatively long. The settled sediment also poses a hazard to living organisms touching or ingesting it, with the hazard being passed up the food chain. Contact by human beings with the sediment poses unknown health impacts. Narragansett Bay is also impacted by the contaminated sediments when they become resuspended, and then re-settle in the Bay.

The Blackstone River Initiative included analyses of the chemistry and toxicity of sediments and sediment pore water at several sites along the Blackstone River. Complicating evaluation of the findings is the absence of Federal or state quality standards for sediments, although various standards and criteria promulgated by various entities have been used by EPA and others to screen and rank sediment contamination. Based upon all of the sediment

standards and criteria used by EPA, the sediments are heavily contaminated with heavy metals and polynuclear aromatic hydrocarbons, especially in the upper Blackstone River ponds. The most contaminated sites include Singing Dam, Fisherville Pond, the former Rockdale Pond, Rice City Pond, and Manville Dam. Sediment toxicity tests conducted in December 1993 demonstrated significant toxicity, particularly at Singing Dam and the former Rockdale Pond site, where both species tested were significantly impacted. (Note: Fisherville Pond was not tested in 1993 due to inundation of the access site). Previous toxicity tests had indicated less clear results. Toxicity tests conducted by EPA on Blackstone River sediments in 1980 (results summarized in: "A Sediment Control Plan for the Blackstone River", Massachusetts DEQE, July 1981) used water column toxicity test organisms, including fish. Impacts to water column organisms would not be expected to be as significant as impacts on organisms that live in contact with, and ingest, the sediment. If contaminants were released to the water column at very toxic levels, the sediments would quickly clean up on their own accord. Toxicity tests conducted by EPA in 1991 used organisms that live in the sediments, however, only a draft version of the final test methodology was used. The final methodology was used in the 1993 toxicity tests.

In the early 1980's, the McGinn report recommended a comprehensive $35.6 million sediment management strategy involving various combinations of dredging, sediment stabilization, and other options to deal with the estimated two (2) million cubic yards of sediments in the Massachusetts portion of the river (Ref: "A Sediment Control Plan for the Blackstone River", Massachusetts DEQE, July 1981). None of the recommended actions were undertaken.

3.3 Streamflows

The natural flow of the Blackstone River is augmented by Worcester's interbasin transfer of approximately 20 cubic feet per second (cfs) of water from the Nashua River basin. This flow is discharged at the Upper Blackstone Water Pollution Abatement District's outfall near the head of the Blackstone River watershed in southern Worcester. Flows of the Blackstone are then reduced through diversions by water users, diversions into intact sections of the Blackstone Canal, and diversions through hydropower facilities. Commercial, industrial, and municipal water users typically divert water for very short reaches of river, and, when individually assessed, they may not be significant, especially since most diversions of water are only partially consumptive. The cumulative impact of diversions of Blackstone River water has largely been unexamined. The Canal is currently watered for approximately

6 miles including the Canal at Ashton Dam in Cumberland that diverts some of the flow of the Blackstone River into the Moshassuck River basin. Future diversions of water, including the potential reactivation of the Blackstone Canal, will further lower flows. Hydropower operations dewater various lengths of the Blackstone River depending upon their configuration, with the longest reach dewatered being associated with the Tupperware Dam diversion to the Tupperware Hydropower Plant. This diversion dewaters approximately one mile of river, including the scenic Blackstone Gorge. There are believed to be privately negotiated minimum releases along specific segments of the Blackstone River, e.g. the Tupperware Hydropower Facility bypasses flows pursuant to an agreement with Ocean State Power.

The Blackstone River has two hydrologic problems: flows insufficient to support all desired uses of the river and short-term fluctuating flows. Low streamflows and corresponding shallow depths, impact the viability of aquatic life by directly reducing habitat area and by reducing the level of water quality necessary to support aquatic life. Water quality is degraded by less water being available for dilution and for reaeration. Insufficient depths cause boats to "bottom out", degrading the recreational experience. The exposed sediments and low flows also degrade swimming and fishing opportunities.

Hydropower facilities not operating as run-of-river are believed to be the primary cause of the major short-term (i.e. hours) fluctuations of streamflow, although wastewater treatment plant releases may also contribute to the fluctuations. Water levels may drop below the spillway of a hydropower dam, causing a period of no flow first below the dam, then at downstream locations when the "lack of flow" works its way downstream. The lack of flow is particularly critical in non-ponded areas downstream from dams. Surging flows caused by the sudden activation of hydroelectric turbines may resuspend sediment and adversely impact aquatic life.

The Federal Energy Regulatory Commission (FERC) requires minimum streamflow bypasses over the spillways for all hydropower dams on the Blackstone River except for Tupperware Dam, Riverdale Dam and Thundermist Dam (Woonsocket Falls), and requires all but Thundermist to operate as run-of-river. In specific cases, FERC has reserved the right to either mandate or increase minimum flow releases by the facilities when conditions in the bypassed sections improve enough to support aquatic habitat. Violations of the operation requirements have been reported, and some have been brought to FERC's attention. No changes in hydropower operation have yet occurred, however. It is noted that

all of the hydropower facilities have been licensed for a period of forty years, with all but the Riverdale facility relicensed in 1980 or 1981. Riverdale was relicensed in 1987.

A lack of gages in certain locations has hampered the investigation of the causes of problems, particularly fluctuating flow problems. There are USGS continuous flow recording gages only at Northbridge, Massachusetts and Woonsocket, Rhode Island. Other USGS gages are monitored only when water quality samples are taken. There are believed to be streamflow monitoring gages installed by private entities such as Ocean State Power in Rhode Island, and the hydropower interests. Records of the hydropower facility gages, if they exist, have not been obtained or analyzed by the regulatory agencies. Most or all of the FERC licenses require the installation and monitoring of gages in the vicinity of hydropower plants by the licensees, although FERC generally has not enforced this requirement.

The BRVNHCC has adopted a policy of opposing additional flow diversions until a study can be made on the safe yield of the Blackstone River (Ref: Report on Water Level Policy for the Blackstone River Watershed, BRVNHCC, September, 1991). A December 1989 report by Massachusetts Department of Environmental Management's Division of Water Resources had recommended minimum instream flows for various purposes, however, the flows were never adopted by the Massachusetts Water Resources Commission. The Rhode Island Department of Environmental Management (RIDEM) has successfully applied the U.S. Fish and Wildlife Service's Aquatic Base Flow (ABF) to various proposed withdrawals in Rhode Island. RIDEM anticipates proposing, for inclusion in the review of Water Quality Regulations, the required use of the ABF for activities that may cause or contribute to flow alterations.

3.4 Dams

The condition of dams along the river impacts, or may have impacts, on restoration efforts in two primary ways:

1. Lower than usual water levels may be associated with deteriorated dams. The outlet gates of these dams are typically left open to improve dam safety. This results in increased sediment resuspension from the exposed former pond bottoms upstream of the dams, thereby degrading water quality.

2. There is the threat of failure of unsafe dams. The sudden failure of a dam, and release of contaminated sediment that settles behind the dams, would likely impact

downstream restoration activities, particularly those of fish or waterfowl habitat restoration, may cause loss of life, injury and property damages, and a likely temporary negative impact on water quality.

Currently, there are seventeen dams on the river, all of which are between 7 and 25 feet high, with the exception of the 40 feet high Thundermist Dam in Woonsocket. There are also many dams on the Blackstone's many tributaries that pose a similar threat to the mainstem river. At one time, there were approximately 45 dams on the river (one per mile), though most of these have washed out during floods. Several of the remaining dams are considered to be high hazard (refers to the threat if the dam failed, not the condition of the dam), and several are unsafe. The problem is mainly limited to the Massachusetts segment, since the Massachusetts dams are largely earthen (Rhode Island dams are made of concrete, masonry, or steel), and the sediments are believed to be more contaminated in the upper river reaches. Massachusetts Division of Fisheries and Wildlife has been considering ownership of Fisherville Pond Dam to facilitate its repair. In addition, the state is evaluating options for restoring former water levels at Rice City Pond.

Most of the dams are no longer used for their original purpose, although a few are still operated for hydropower generation. Other dams and their impoundments provide waterfowl habitat, recreation, flood control, and prevent/reduce the downstream migration of contaminated sediments.

There are several constraints as to what can be done with the dams. These include National Register status or the eligibility of the dams to be on the Register, an unassessed impact to downstream areas posed by the release of contaminated sediment, and by potential increased flood damages if a dam is removed.

The Corps has compiled information on the ownership and condition of several of the dams. Dam safety is now the responsibility of the states, with the exception of the FERC dams (FERC has oversight and responsibility for FERC dams). Prior Corps of Engineers Phase I Inspection reports and state-prepared dam safety reports were reviewed in order to cursorily determine the magnitude of the problem. For some dams, no dam safety reports were found (the state had no information) and it is not known if they were ever inspected. It should be noted that most of the dams go by more than one name. The dam names presented in the report were obtained from FERC licenses, Corps and state dam safety reports, Corps flood-related reports, and through personal communications. Table 1 summarizes findings of all of the dams on the Blackstone River.

Table 1: Hazard and Condition of Dams on the Blackstone River

Dam	No.	Owner	Hazard*	Condition**	Inspected
Coes Reservoir***	MA00120	CK Co.	high	fair	6/2/93
Coes Lower Pond ***	none	CK Co.	significant	fair	6/22/89
Quinsigamond Pond***	MA00139	Riley Stoker Co.	high	silted in	6/08/88
New England Power	MA00578	unknown	significant	unknown	unknown
Singing	MA01180	Town of Sutton	low	unknown	unknown
Fisherville	MA00577	Kaltsas Realty Co.	high	poor	10/93
Farnumsville	MA00576	Blkstn Depot St Trust	low	unknown	unknown
Riverdale ****	MA00942	Mr. Knott	low	unknown	unknown
Rice City Pond	MA00935	Mass. DEM	high	fair	7/22/87
Tupperware****	MA00096	Blackstone Hydro	low	unknown	unknown
Saranac Mill	none	P & C Enterprises	unknown	unknown	unknown
Thundermist ****	RI03902	Woonsocket (City)	significant	good	7/26/89
Manville	RI00809	Forte Bros.	significant	fair	9/10/91
Albion	RI00808	American Tourister	significant	fair	3/02/90
Ashton	RI00807	Ronci Mfgr. Co.	low	fair	1/19/89
Pratt	RI01705	J M Mills, Inc.	significant	unstated	7/26/89
Valley Falls ****	RI00401	Blkstn Falls Assoc	significant	good	7/26/89
Eliz. Webbing ****	RI00402	Roosevelt Hydro	significant	good	4/06/87
Slater Mill	RI04270	Blkstn Valley Elec	significant	good	7/09/82
Main Street ****	RI04271	Blkstn Valley Elec	low	good	7/01/86

* Hazard Definition:

Low Hazard = dams located where failure is likely to cause minimal property damage. Loss of life not expected.

Significant Hazard = dams located where failure may cause loss of life and damage to property/facilities or cause an interruption in use or service of relatively important services.

High Hazard = dams located where failure will likely cause loss of life and serious damage to property/facilities/utilities/etc.

** This is the condition at the time of the inspection

*** Although not technically on the Blackstone River, these dams are located at the upstream end of the Blackstone River, in southern Worcester, Massachusetts

**** Under FERC jurisdiction

3.5 Waterfowl Habitat[1]

The Blackstone River and its watershed is one of the last significant black duck production areas in Worcester County, Massachusetts. The black duck is recognized as a species of international concern because of the long-term population decline. Several other species of waterfowl also nest in the region (see Appendix B) and use the river valley as a migration corridor. Production appears associated with several of the impoundments that have created favorable waterfowl marsh and open water habitat. Several of the dams creating the remaining impoundments are now falling into disrepair. If they are drained, as at Fisherville Pond, or if water levels become lowered, as at Rice City Pond, the result is a direct loss of marshland. It is therefore critical to maintain/rehabilitate dams on the river to protect this habitat.

The dams creating significant favorable waterfowl habitat along the Blackstone River include those that impound Fisherville Pond, Riverdale Pond, Rice City Pond, and Lackey Pond (Mumford River) in Massachusetts, and Manville Dam, Ashton Dam, Pratt Dam and Valley Falls Dam in Rhode Island. Acreages of these habitat areas are provided in Appendix B.

The primary waterfowl habitat goal of MADFW is the rehabilitation of Fisherville Pond Dam. Historically, the unique Fisherville wet meadow and shallow marsh habitats functioned as premiere waterfowl habitat and was one of the most productive areas in the State, especially for mallards and black ducks. In Massachusetts, only 7 percent of its ponds are permanent shallow wetlands, hence the significance of rehabilitating Fisherville Pond. Concerns about the safety of Fisherville Pond Dam have prevented its reflooding since 1982, when the pond was originally drained for gravel dredging.

Rice City Pond, as its name implies, has large stands of wild rice which attracts a variety of waterfowl, especially during the fall migration period. Land around the pond was acquired by the state in 1983 (now part of the Blackstone River and Canal Heritage State Park) thereby providing direct protection of the habitat area. Water levels in the pond are a current concern since the flashboards have failed, reducing water levels. Fluctuations in water levels at Rice City Pond from undetermined causes have been noted. Water level

[1] The discussion of waterfowl habitat problems is a summary of the detailed information presented in Appendix B, Waterfowl Habitat. All references are cited and listed in the Appendix.

fluctuations have also been observed at Riverdale Pond, most likely due to the Riverdale hydropower project. The deteriorated Lackey Pond Dam has resulted in inadequate water levels for waterfowl.

Impoundments of primary interest to the RIDFWER are those behind Pratt and Valley Falls Dams. These areas contain substantial acreage for nesting and migratory waterfowl within a high density human population. The maintenance and/or repair of these dams would facilitate the continued provision of quality waterfowl habitat in the lower river reach.

3.6 Anadromous Fish[1]

Historically the Blackstone River supported spawning runs of anadromous species of fish. Each spring adult American shad, river herring (alewife and blueback herring), and Atlantic salmon would ascend the river to spawn. Unfortunately the extensive construction of dams for water power in the 1800's and the accumulation of industrial wastes behind the dams interrupted and eliminated these runs in the Blackstone River. The first dam on the Blackstone was constructed in 1793 to generate power for Slater's Mill despite protests of upstream farmers and fishermen. The construction of the dam prevented anadromous fish migration up the Blackstone River.

Atlantic salmon once constituted a large portion of the commercial catch in Narragansett Bay. However, this fishery completely collapsed by 1869, with its loss attributed to loss of access to suitable spawning grounds in the upper reaches of the Bay tributaries. All tributaries to the Providence and Seekonk Rivers were dammed for waterpower by the early 1800's. With no recruitment occurring in Narragansett Bay for Atlantic salmon populations, local extinction of the area was rapid and complete.

Alewives also commanded an extensive fishery in Narragansett Bay from the mid-1800's to the turn of the century. But by the early 1900's this commercial fishery was declining rapidly, and it was essentially abandoned by 1930. This species, like the salmon, travels up the estuary to spawn. It is not, however, as reliant as salmon upon gaining access to the upper reaches of tributaries to successfully reproduce. Although damming of tributaries in Narragansett Bay may have negatively influenced alewife stocks, the fishery's

---

[1] The discussion of anadromous fish is a summary of the detailed information presented in Appendix C, Anadromous Fisheries. All references are cited and listed in the Appendix.

failure is generally attributed to overfishing. Fish traps were often placed so densely throughout Narragansett Bay that it was nearly impossible for any alewives to reach the upper bay. Alewives have not been fished on a commercial basis in Narragansett Bay waters since the fishery's collapse. In the late 1950's, however, alewives began returning to Narragansett Bay in increasing numbers, and have been observed in the Providence and Seekonk Rivers. Spawning now occurs in tributaries of the Bay which remain accessible, and the species appears to be re-populating itself as a springtime visitor to the Bay.

The collapse of Narragansett Bay fisheries for anadromous species is not entirely attributable to water quality degradation in the estuary and tributaries. Overfishing took a rapid toll on the populations of these fishes, and loss of access to historic spawning areas because of dams, at least for salmon, prevented the rapidly depleted adult stocks from replacing themselves. In the case of the alewife fishery, water quality degradation in the Providence and Seekonk Rivers may have caused a loss of suitable spawning habitat, but extraordinary fishing pressure apparently was the main cause of the extinction of the commercial fishery in Narragansett Bay.

Recent improvement in water quality along with advancements in fishway technology indicate that restoring populations of American shad and river herring to the lower portions of the Blackstone River system may be possible. Reestablishment of Atlantic salmon would be more difficult since historical salmon spawning and nursery habitat areas located in the upper tributaries of the Blackstone River are inaccessible due to numerous dams. In addition, because most of the tributaries are impounded, the feeder streams may be too warm for salmon survival. Currently, Atlantic salmon are not considered a viable restoration target species for the Blackstone River based upon the analyses and proposed actions in the "Final Environmental Impact Statement (FEIS) 1989-2012: Atlantic Salmon Restoration in New England" issued by the USFWS in 1989. The Blackstone River was not included among the 28 major rivers in New England that contained significant Atlantic salmon populations in pre-colonial times and is consequently not one of the rivers targeted for restoration in the FEIS.

The main restoration concern of RIDEM's Division of Fish, Wildlife, and Estuarine Resources (DFWER) at this time is the construction of fish passage facilities at the four lower dams to open sufficient spawning and nursery habitat for self-sustaining populations of American shad and river herring. The construction of fish passage facilities at these dams would be only Phase I of an effort with a long-term goal of reintroducing anadromous fish to

all or much of the length of the river. However, such an undertaking would be enormous, requiring a multi-state, multi-agency approach, combining all existing technical and financial resources. The Massachusetts Division of Fisheries and Wildlife supports the goal of anadromous fish restoration in the Blackstone River.

DFWER has expressed concerns regarding the sufficiency of flows during critical life-cycle periods in August and the spring upstream migration season, and with water and sediment quality. Contaminated sediments may not have any bearing on the success of anadromous fish restoration in the Blackstone, however, since there are many healthy populations of anadromous species in rivers with comparable sediment contamination. Anadromous fish are not year-round resident fish species and therefore only spend part of their life-cycle as adults or juveniles in the river system.

3.7 Recreation and Aesthetics

Actual and potential recreational uses of the river (and the land abutting it) include fishing, canoeing/kayaking/boating (including the Blackstone Valley Explorer, a 33-foot passenger riverboat used for river history/ecology education purposes), swimming, picnicking, hiking, bicycling, cross-country skiing, and bird watching. Problems associated with use of the Blackstone River for these purposes include potentially inedible fish, a lack of access to the river by boaters and other recreationalists, frequent portaging requirements for canoeists/kayakers, low water levels, physical hazards in the river, and potential health risks associated with direct water and sediment contact.

Degraded aesthetics along the river caused by the presence of landfills, junkyards, litter, decay and vandalism affect the desirability of the use of the river for recreational purposes. Aesthetics of the river itself are also degraded by algae blooms and noxious aquatic plants, floating debris, and by total suspended solids in the water column (i.e. the water appears dirty). Odors from chlorine, sewage, or oil (in various locations), also lessen the river's appeal to recreationists.

Fish from four Massachusetts impoundments on the Blackstone River were recently sampled for heavy metals, organochlorine pesticides and PCBs to determine edibility. Results have not yet been published. However, because of a finding of elevated levels of PCBs in some of the fish examined, the Massachusetts Department of Public Health has

issued public health advisories for certain species of fish in three of the sampled ponds: Riverdale Pond (all species of fish), Rice City Pond (carp only), and Tupperware Pond (carp and white suckers). No advisory was issued for fish in Fisherville Pond.

3.8 Interrelationship of Problems

The problems of the Blackstone River basin are complex and interrelated, making the formulation of comprehensive solutions very difficult. Virtually none of the problems can be independently solved because of the interrelationships. Water quality is impacted by contaminated sediment, particularly when it becomes resuspended, the condition of dams and associated water levels, and streamflows/withdrawals. (Water quality is, of course, also impacted by continuing point and non-point sources of contamination). The quality of the water and the sediments impact the aquatic resources of fish and waterfowl, as well as recreational activities. Impacts from contaminated sediment in the Blackstone are experienced as far away as Narragansett Bay. Besides their impact on water quality, streamflows/depths significantly impact recreational opportunities on the river. Dams impact canoeing/kayaking use by causing the need for portaging and affect fish habitat and recreational experiences by altering the still water versus flowing water nature of the river. Dams also obviously impact the viability of anadromous fish by preventing their migration. Dam safety potentially impacts recreational use, and fish and waterfowl habitat.

Chapter 4: EVALUATION OF POTENTIAL SOLUTIONS

4.1 Objectives and Constraints

Based on an initial evaluation of the existing conditions of the river and discussions with Federal, state, regional and community officials, several objectives for the Blackstone River were established. It should be noted that the objectives do not include a restoration of the Blackstone River to its pre-industrial state, but instead seek a balance between the natural and the man-made environment that the river is significant for. The objectives are as follows:

1. *Re-establish a healthy and diverse aquatic environment.*

   Water quality, sediment, the condition of dams, stream flows and depths are the main factors in obtaining this goal.

2. *Restore anadromous fish.*

   Fish passage will be needed over or around dams to allow access to the river's historical habitat areas, or dams would need to be removed.

3. *Improve waterfowl habitat.*

   This is especially desired at Fisherville Pond, in Grafton, formerly Massachusetts' premiere waterfowl site.

4. *Improve recreational opportunities and experiences.*

   This objective also includes improving the aesthetics and educational environment.

The objectives for the river are interrelated similar to the way that the problems of the river are interrelated. Because of the interrelationships, none of the objectives can be looked at completely independently, although each objective has independent aspects.

Constraints on the system include existing hydropower operations, National Register status (or the eligibility) of many of the dams and the canal, NPDES discharges (waste assimilation needs), and industrial and commercial uses of the river. The availability of funds to achieve the objectives will impact what can realistically be done.

Outside of the scope of this investigation are land use and river access issues as they are the purview of the state planning agencies. One of the significant land use issues directly impacting the river's health are the numerous hazardous waste sites along the river, including a Superfund site, at least two Massachusetts 21E sites and several sites regulated by Rhode Island (the Peterson/Puritan, Inc. Superfund site located in the towns of Lincoln and Cumberland, Rhode Island, the Coes Knife Company 21E site in Worcester, Mass., the Omni-Duralite Inc. 21E site in Grafton, Mass., and several sites in Rhode Island). Cleanup of these sites is not addressed within the framework of a comprehensive plan. Also, because the regulatory agencies will pursue the reduction of pollution from "new" point and non-point sources of contamination, regardless of the efforts taken by others, the solutions to problems caused by these sources are not included in this report.

4.2 Formulation and Evaluation Criteria

Attainment of the stated objectives may be measured using various evaluation criteria. The selection of the criteria is critically important to evaluating solutions. The choice of criteria may not be clear cut: e.g. the use of water quality standards and sediment quality guidance criteria versus the use of ecological and human health risks. The criteria may be used to establish the benefits and costs of various alternatives. Potential criteria available are:

1. Water quality standards.
2. Sediment quality guidance criteria (absent of Federal or state sediment quality standards).
3. Risks to human and ecological health.
4. Recreational benefits to users.
5. Economic costs versus economic benefits.
6. Number and diversity of anadromous fish, waterfowl and other aquatic life.
7. Benthic macroinvertebrate community health.
8. Preservation/restoration of historic structures.
9. Loading of contaminants to Narragansett Bay (lbs/year).

4.3 Major Questions

There are several major questions that need to be addressed before specific solutions to problems can be formulated. Each question and a discussion of the issues and work needed to be performed to answer the question follows:

Question 1: What is the relative significance of the various sources to water quality contamination at various locations?

This question should soon be answered through the efforts of the Blackstone River Initiative. The EPA-mandated implementation of Total Maximum Daily Loads by the spring of 1995 (revised from the original date of June 1994) for river segments with water quality criteria violations, and the eventual correcting of the causes of the violations including both point and non-point sources, will depend on the successful differentiation of the causes of the problems. Through the water quality modelling efforts of the University of Rhode Island (URI), being performed for the Initiative, there will be a differentiation of point source loads and non-point source loads. URI will also attempt to further separate the non-point sources of contamination into old (historic sediments) and new (storm runoff) sources. Limno-Tech, Inc. of Michigan, also performing work as part of the Initiative, is also making an attempt to separate the non-point sources into old and new sources using the same water quality data set that URI is using.

Question 2: What is the relationship between various contaminants in Blackstone River water and sediment to toxicity and bioaccumulation in living organisms?

Despite its degraded aquatic environment, the Blackstone River appears to possess a good diversity of apparently healthy fish. In addition, the degraded environment has not led to significant bioaccumulation of metals in the tissues of the fish, despite the fact that the sediments are contaminated with extremely high levels of metals. (This conclusion is based upon a limited sampling of fish in Massachusetts ponds by the state's Department of Environmental Protection. Although not sampled, the same conclusions may be made for fish in Rhode Island segments since the contamination in these segments is less).

Bioassays (toxicity tests) on water samples taken from various Blackstone River locations during dry weather have indicated an unexpected lack of toxicity despite the fact that acute ambient water quality criteria for metals were exceeded in some of the samples. Acute ambient water quality criteria that is exceeded normally impacts aquatic life in a short (less than 96 hour) time span, with death of the aquatic life usually resulting. The test organisms exposed to the Blackstone River samples were significantly impacted only during wet weather conditions. This could indicate that the national ambient water quality criteria that was adopted by the two states may not be a valid measure of the attainment of environmental goals on a site-specific basis. The applicability of the national ambient water quality standards to water with very low hardness, such as that in the Blackstone River, has been questioned. Another possibility is that the unexpected lack of water toxicity in dry weather conditions could be due to complex synergistic effects between the contaminants that "bind" them, making them biologically "unavailable".

EPA has hired the US Geological Survey to characterize organic-metal complexes in the water column and their relationship with toxicity in the hope of providing explanations. The Massachusetts Department of Environmental Protection is building a special "clean laboratory" at the Wall Experiment Station in Lawrence, Massachusetts to measure minute levels of metals in an attempt to establish a protocol that can be used by dischargers to establish site-specific water quality criteria for the Blackstone River. The Massachusetts Department of Environmental Protection is working on a protocol for copper criteria only. Copper was chosen because of observed exceedances of acute ambient water quality criteria and of NPDES discharge limits, and because it is relatively simple to deal with in a laboratory environment. If site-specific criteria are eventually established, municipal and industrial dischargers may be able to save in future wastewater treatment costs. Rhode Island has requested that EPA investigate the applicability of the adopted ambient water quality criteria to waters of the Blackstone River (Ref: The State of the State's Waters - Rhode Island, A Report to Congress, 1992 305-b report, August 1992). Rhode Island is otherwise leaving the pursuit of site-specific criteria up to dischargers to the river.

In general, bioassays on Blackstone River sediments have indicated toxicity, with the level of toxicity greater in the upstream reaches of the river. However, similar to what has been observed with water, bioassays on the Blackstone's sediments do not always indicate high levels of toxicity from samples taken in areas where contamination is believed to be great. Some of the variation in the toxicity test results may be explained by the variable

nature of the geographic dispersion of the contaminants in the sediments, with the sampled sediments being clean in comparison to other sediments in the area. Another explanation for variations is the presence of various levels of known "binding agents", such as acid volatile sulfides and total organic carbon, that render the toxic components biologically unavailable. Because chemical analysis was not always performed on the sediments used in toxicity tests, it was not always possible to determine if contaminants were or weren't present in the sediments, or what the levels of the binding agents were. Some of the variability in findings may be explained by differing toxicity testing methods used at various times. In the past, fish and other aquatic life that lived in the water column were used in the bioassays. Because contaminants in sediments do not tend to be "released" into the water column otherwise the sediments would quickly cleanse themselves, toxic levels in water due to sediment contamination do not typically occur, therefore water column organisms may not be the best indicator of sediment toxicity. Current bioassay methods are believed more rigorous since they test organisms that live in or on the sediment, and ingest the sediment.

The benthic macroinvertebrate community presently living in the water/sediment interface indicates improving environmental health from previous assessments (Ref: Blackstone River Initiative , Phase I: Dry Weather Assessment Interim Data Report of Data 1991). Because the benthic macroinvertebrate sampling was done in fast-flowing riffle areas and not in the ponds where the contaminated sediment is believed to have accumulated, this may only indicate improving water quality, and not improving sediment quality or reduced sediment toxicity. However, this could also indicate that contaminated sediments are not resuspending, and that the problems related to contaminated sediments are isolated.

Although the Initiative believes that it has sufficient information on which constituents pose a hazard to the ecological environment, a toxicity identification evaluation may be needed on the Blackstone River water and sediment to definitively establish causes and effects of the toxicity. There has been very little work to establish the factors responsible for toxicity and bioaccumulation beyond a limited attempt by the Initiative to correlate water quality concentrations with observed toxicity. The Initiative is, however, also considering a similar effort for sediment. These attempts may or may not result in statistically valid correlations of toxicity with contaminant levels. Toxicity of the sediments in its various manifestations, including submerged, exposed, and disturbed, needs to be determined. In addition, the toxicity of the sediments over time needs to be determined in order to learn if the problem of contaminated sediment is changing. An understanding of the factors driving

toxicity and bioavailability of the contaminants is critical to assess the risks posed by the contamination, to generate Blackstone-specific water and/or sediment quality criteria, and to facilitate the evaluation of solutions to water quality and contaminated sediment problems.

Question 3: What are the human health and ecological risks posed by the environment (water and sediment) at various locations?

Risks should be determined through a human health and ecological risk assessment at selected sites, with present and future uses of the sites factored in. The sites chosen for analysis could be impoundments and/or river segments, and could be reflective of either representative or "worst case" situations. Human health and ecological risk concepts applicable to Superfund cleanups may be applicable to the cleanup of riverine systems. Using Superfund terminology, the selected sites would be known as "Operable Units". Risk assessments would be based on the contaminants found at each site, their toxicity and potential for bioaccumulation (see question #2), and the types of human and ecological exposure that may be expected. Management of these risks could then be applied in the selection of a comprehensive solution. The relative risks posed by the water, sediment, and from fish consumption would be determined as part of a risk assessment. A human health risk assessment may be particularly critical in areas with exposed, but formerly submerged sediments, such as at Fisherville Pond and the former Rockdale Pond. Appendix D provides a general description of what risk assessment is and what it involves.

Risks have not yet been determined for any sites on the Blackstone River. The Massachusetts Department of Public Health, the agency recently issuing public health advisories concerning the consumption of fish taken from specific ponds on the river, does not quantify risks, questioning the representativeness of fish caught by fish samplers to those actually being consumed. Instead, it simply compares levels of contaminants in fish tissue to U.S. Food and Drug Administration "advisory levels" designed to be applicable to commercial fisheries, and issues public health advisories as appropriate. It is noted that the comparison of water quality standards to observed water quality concentrations can also be considered a simple form of ecological risk assessment for the water portion of the environment only, however, the applicability of these standards to the Blackstone River has been questioned. The risks associated with poor water quality and the risks attributed to contaminated sediments should be individually determined as part of the total site risk.

Question 4: What are the impacts of dam failure, removal, and slow deterioration to downstream areas?

Do the benefits of the dams outweigh the disadvantages? What effect would removing a dam have on the toxicity of the impounded sediments (see question #2)? It is noted that the impacts of removing dams may be similar to those of a dam suddenly failing. There are, however, ways to minimize these impacts, such as by directing streamflow around the dam during its removal.

The impacts of dam failures, removal and their slow deterioration has not been addressed, nor are there any current plans to do this. The answer to this question may play an important part in the selection of a comprehensive plan, either increasing or limiting options, depending upon the findings. A sediment transport model for the Blackstone River may be needed to assess impacts depending upon the findings of the relative significance of the resuspension of sediment in comparison to other problem sources (see question #1).

4.4 Potential Solutions and Their Effects on Objectives

The general **types** of potential solutions available to eliminate or mitigate the Blackstone's problems are described in this section. Any one, or a combination of several, of these potential solutions could be implemented to achieve one or more of the restoration objectives. Because of the interrelationships of the problems being addressed, solutions taken to achieve one objective will have positive or negative impacts on other objectives. Some of the benefits and the tradeoffs associated with the potential solutions are discussed below.

The general **approach** to be used to achieve objectives and solve problems, and the integration of steps with solutions required to achieve multiple objectives is described in the Comprehensive Planning section of this report. A comprehensive plan will necessarily involve tradeoffs of benefits in certain areas at the expense of others.

Potential solutions to water quality and associated objectives at the sites may include:

1. the rehabilitation or removal of the dams;

2. the diversion of all or some of the water around the impoundments;

3. the capping, removal or remediation of contaminated sediments;

4. the creation or restoration of wetland areas;

5. the investigation of flow fluctuations likely caused by hydropower facilities;

6. other options, not directly related to the achievement of water quality objectives.

Rehabilitation or removal of dams: Rehabilitation of dams, particularly those impounding ponds with significant wildlife or recreational values, may be desirable. If dams are reconstructed, fish and boat passage should be considered. Removal of other dams, especially those in poor condition, with little storage, and with little historic significance or purpose, may be desirable. Removal of some dams may open sediment management options by allowing the sediment to accumulate in one or two impoundments instead of many. With respect to the potential for adverse effects by removing dams, it should be noted that numerous dams on the river have historically failed, although the specific impacts caused by their failure has not been assessed.

Rehabilitation of dams may serve the purposes of improving dam safety to reduce potential risks to life and property, reducing downstream flood damages, stabilizing sediments to improve downstream water quality and aquatic habitat, providing nutrient removal, reducing the contaminant load to Narragansett Bay, reaerating water as it passes over the spillways, and restoring water levels to enhance waterfowl habitat and submerge sediments, reducing human and ecological exposure to the sediments. Possibly cleaner sediment from current sediment sources may eventually bury and naturally cap dirtier historic sediments behind rehabilitated dams. Potential adverse effects to be considered with rebuilding dams, however, include an increase in algae production particularly in nutrient-high reaches, associated diurnal fluctuations in the water's oxygen levels, and oxygen demands imposed by the decay of the algae. Other potential negative impacts include the increased sediment oxygen demand on the water due to increased pond detention time. Any significant dam rehabilitation efforts will undoubtedly spark the interest of dam safety officials, who are likely to require an increase in spillway or outlet capacity, thereby impacting costs.

Removing dams would negate dam safety and dam maintenance issues, facilitate both upstream and downstream fish and boat passage, and would allow previously flooded land to be reclaimed for other purposes. It would minimize sediment oxygen demand on the water column by reducing the exposure time of the water to the sediment. There would likely be

short-term water quality impacts to downstream areas, with contamination "hot spots" possibly migrating downstream. Downstream entities may oppose dam removal because of the potential adverse impacts on their geographic areas of interest. The toxicity of the sediments themselves may also change when a dam is removed and the sediments are re-mobilized or exposed to oxygen because of lesser area flooded. Removing dams may ruin existing fishery habitats that have developed in the ponds associated with the dams. Removing dams may also be contrary to those concerned with the restoration of waterfowl habitat, preservation of existing habitat areas, preservation of the historical status, and with the environmental restoration of Narragansett Bay. However, because the sediments of the Blackstone River are generally less polluted than the sediments of the Bay (personal communication, Dr. Raymond Wright), the eventual release of the sediments to the Bay caused by removing dams may not be as adverse to the Bay's health as would be the case if the Bay sediments were clean to begin with.

Diversion of all or some of the water around the impoundments: The diversion of water around contamination "hot spots", first proposed by the University of Rhode Island and the Massachusetts Department of Environmental Protection in conjunction with the establishment of regulated wetlands/waterfowl habitat restoration from which most flow would be diverted around, should be considered. The diversion could potentially utilize reactivated or restored portions of the historic Blackstone Canal. Diversion of water may also create dredging opportunities.

Use of the Blackstone Canal or a new channel to permanently divert much, but not all, of the flow around certain impoundments may dampen diurnal dissolved oxygen fluctuations and minimize sediment oxygen demands, since a lesser percentage of water would flow through the impoundments. The ponds would still provide nutrient and metals removal for that portion of the water flowing through it. Use of the canal or a new channel could also provide canoe and upstream and downstream fish passage around the dam, and reduce flood flows at the dams, perhaps lessening spillway modification requirements. If the Blackstone Canal were restored and used for this diversion, the goals of those concerned with historical preservation could potentially be obtained. Permanently diverting streamflows around "hot spots" may improve water quality, but would still leave the contamination available for human and ecological exposure. The diversion of water around areas to be dredged could potentially allow the sediments to dry out, minimizing the volume of sediments to be handled. Resuspension of sediments to the water column would not occur during dredging operations if flows were diverted during dredging.

Capping, removal or remediation of contaminated sediments: A multitude of options are possible in dealing with the contaminated sediment and its threat to human and ecological health. An extensive effort of determining the areas and volumes of contaminated sediments would need to occur before the sediments could be dredged and then either disposed in a landfill or treated and replaced. The sediments could also be capped to prevent human and ecological exposure to the contaminants, stabilized through chemical, biological or physical means, or be kept submerged to limit human and ecological exposure. Because dredging or capping would be harmful to plant life in the dredged/capped areas, plants would have to be restored, either naturally or through planting. The capability of the material on the bottom of the impoundments to support vegetation would have to be considered.

A risk-based approach to the sediment contamination problem may open feasible options. For example, if only the top two or three feet of sediments pose unacceptable risks, remediation may be limited to that portion. If human health and ecological risks from the sediment are found to be minimal, or if adverse effects from sediment remediation outweigh beneficial effects, perhaps no action should be taken. It is noted that the benthic macroinvertebrate community appears to be improving at most locations in response to improved environmental conditions. This could be due to improving water quality, but could also, in part, be due to the contaminated sediment problem correcting itself, or at least stabilizing, over time.

Various means of dealing with the contaminated sediments have the potential to eventually reduce the adverse human and ecological effects, and may lower the sediment oxygen demand on the water. Water quality may be improved, and the load to Narragansett Bay lessened. Dredging the sediment would result in possible resuspension of sediment, temporarily lowering downstream water quality, and releasing contaminants to downstream locations. Dredging would severely impact the local ecosystem, including plant, fish, benthic macroinvertebrates and the existing waterfowl habitat. The toxicity and bioavailability of the disturbed sediments may also change. Dredging would also result in an increased pond volume, thereby increasing pond detention time and perhaps sediment oxygen demand if organic material remained undredged. These issues may be minimized, however, by diverting flow around the dredge areas, perhaps using the Canal. Dredging would raise controversies surrounding temporary storage locations, hauling activities, and the ultimate disposal of the dredged material. The ultimate disposal of the contaminated sediment in particular is likely to be expensive and highly controversial, and the volume of contaminated

sediment may be immense. Treatment and replacement of dredged material may minimize disposal concerns, and perhaps provide a material suitable for marsh or other vegetation.

Capping of contaminated sediment may adversely affect the viability of natural vegetation unless a natural top soil is used as part or all of the cap. Cap thickness may affect pond depth and complicate design for waterfowl habitat purposes.

Creation or restoration of wetland areas: Restoration of the marsh area would improve the waterfowl habitat, the recreational and aesthetic values of the area, and the fish habitat. Disturbing the sediments on the pond bottom may change their toxicity. An increase in habitat area is possible if a greater area is flooded at the desired depths. The marsh would retain its functions of removing nutrients in the river. Temporarily diverting the flow of the river around the marsh during marsh rehabilitation activities may increase the feasibility of the restoration options.

Investigation of flow fluctuations likely caused by hydropower facilities: Hydropower plants operating as run-of-the-river, with satisfactory minimum streamflows bypassing the turbines as spillage over the dams, would improve water quality downstream of the dams, enhance fish habitat, enhance recreational opportunities, facilitate anadromous fish passage, and enhance aesthetics.

Other options, not directly related to the achievement of water quality objectives: The provision of fish passage facilities would facilitate anadromous fish runs on the river, but would likely negatively impact hydropower operations. Fish passage facilities would impact the appearance of the dams, many of which are either on the National Register, or eligible for Register status. Those concerned with the Blackstone's historic status will likely have a major input in the design considerations, pushing up costs perhaps to a significant extent. The provision of passage around dams could improve recreational opportunities for boaters. Depending on its form, it may also have some water quality and/or fish passage benefits.

4.5 Potential Site-Specific Solutions

In order to move away from discussions in generalities, one of a large number of possibilities is briefly described below. As stated previously, all options would require significant additional study. *The main purpose of the presentation of a scenario at this early*

stage is merely to facilitate discussion of the types of things that could be done when trying to achieve multiple objectives. The actions center around the dams because of their critical importance to all of the objectives. It is based upon preliminary findings in the course of preparing the framework described in this report. A comprehensive effort of field investigations at the sites did not occur. It cannot be overemphasized that presentation of this scenario is not intended to bias or predetermine a selected plan. The purpose of this report is not to analyze findings or select a plan, but merely to lay out the framework of the plan.

Coes Reservoir Dam: This dam creates a large impoundment very important for recreation in Worcester. The dam and mill complex immediately downstream from the dam may have historic significance. The dam is in poor condition and is classified as high hazard, threatening Worcester's Webster Square. The dam should probably be reconstructed, and the Massachusetts Superfund (21E) site associated with the mill should be cleaned up.

Coes Lower Pond Dam: This dam has little storage or function, and should probably be removed.

New England Power Co. Dam: This small dam has very little storage and no current purpose. It should probably be removed to facilitate canoe passage.

Singing Dam: The eroding contaminated sediment behind this dam needs to be stabilized.

Fisherville Pond Dam: This dam has been drained since 1982 due to concerns about dam safety. Fisherville Pond was a very important waterfowl habitat area, providing year-round habitat. The dam should probably be reconstructed and the pond re-established. The Massachusetts Superfund (21E) site associated with the mill located downstream from the dam should be cleaned up. One idea, proposed by the University of Rhode Island's Dr. Raymond Wright and the Massachusetts Office of Watershed Management's Mr. Hillary Snook, is to create a new channel or refurbish the Blackstone Canal to bypass a significant portion of the river around the pond primarily to minimize the potential for algae blooms and associated dissolved oxygen demands. Fisherville, which is located only a few miles downstream from the Upper Blackstone Water Pollution Abatement District's outfall, is exposed to particularly high concentrations of phosphorous and nitrogen. The contaminated sediment behind the dam and in the Canal should probably be removed or capped, and the pond wetland area restored.

Farnumsville Pond Dam: This dam should probably be rebuilt due to its historic value. Investigate jurisdiction over this apparently unlicensed hydropower facility, and investigate potential streamflow fluctuations resulting from hydropower operations. There are opportunities for Canal reactivation in this area, perhaps in conjunction with restoration of the Canal in the Fisherville area.

Rockdale Pond (former impoundment): Stabilize or remediate the contaminated sediment in this area. Significant contamination with oil has been noted in this area. Consider reactivation of the Blackstone Canal to bypass the contamination.

Riverdale Dam (FERC dam): Investigate potential streamflow fluctuations resulting from hydropower operations.

Rice City Pond Dam: Replace the flashboards on the dam's spillway. Stabilize or remediate the contaminated sediment in the pond. Consider reactivation of the Blackstone Canal upstream of the dam to bypass the contamination. Design a weir to maintain a constant depth in the canal downstream of the dam and upstream of Route 16 for boating purposes.

Tupperware Dam (FERC dam): Investigate potential streamflow fluctuations resulting from hydropower operations and provide minimum streamflow bypasses for aquatic resources in both the Blackstone Gorge and the bypass channel.

Saranac Mill Dam: Remove this dam since it has no purpose and impedes boating. If historic dam considerations are significant, incorporate fish and/or boat passage facilities. The canal downstream of this dam may be worth re-watering.

Thundermist Dam (FERC dam): Investigate streamflow fluctuations resulting from hydropower operations and minimum streamflow bypass needs, and options to change this operating regime.

Manville Dam: Restore this historic dam. It may be desirable to incorporate fish and/or boat passage facilities at this time.

Albion Dam: Restore this historic dam. It may be desirable to incorporate fish and/or boat passage facilities at this time.

Ashton Dam: Restore this historic dam. It may be desirable to incorporate fish and/or boat passage facilities at this time.

Pratt Dam: Restore this historic dam. It may be desirable to incorporate fish and/or boat passage facilities if the dam is restored.

Valley Falls Dam (FERC dam): Investigate potential streamflow fluctuations resulting from hydropower operations and minimum streamflow bypass needs, particularly in light of anadromous fish restoration efforts. Provide fish passage facilities for the Phase I anadromous fish restoration.

Central Falls Dam (FERC dam): Investigate potential streamflow fluctuations resulting from hydropower operations and minimum streamflow bypass needs, particularly in light of anadromous fish restoration efforts. Provide fish passage facilities for the Phase I anadromous fish restoration.

Slaters Mill Dam: Provide fish passage facilities at this dam for the Phase I anadromous fish restoration effort.

Main Street Dam (FERC dam): Consider removal of this dam, the most downstream dam on the river. The existing water intake to Blackstone Valley Electric Co.'s hydroelectric power plants could be extended farther upstream to the Slater Mill Dam. This may be beneficial to both the utility and those interested in providing anadromous fish passage since it would increase hydroelectric power generation opportunities (4-5 foot increase in head) and elimination of fish passage, dam repair and maintenance costs. If the dam is kept intact, investigate potential streamflow fluctuations resulting from hydropower operations and minimum streamflow bypass needs, particularly in light of anadromous fish restoration efforts. Provide fish passage facilities for the Phase I anadromous fish restoration.

4.6 Agency Views and Preferences

Solutions which are ultimately proposed to address the problems of the Blackstone River may reflect, in large part, the responsibilities, views and preferences of the agencies funding and implementing them. In addition, the federal and/or state agencies providing funding for such an effort may be limited by their existing authorities which may limit the type and extent of solutions that may be considered. As such, the views and preferences of

several of the agencies currently involved with or examining restoration options on the Blackstone River are discussed.

Until recently, the Blackstone River Valley National Heritage Corridor Commission has largely focused its efforts on preserving the characteristics of the historic mill villages and towns and the industrial features that provide the Blackstone region its character. It is now turning its attention to the river itself. The preference is that a multi-objective approach be taken to the river's restoration in order that the attainment of one objective not come at the expense of another, unless the objectives are first prioritized. A comprehensive plan approach is, therefore supported by the Commission.

The Massachusetts DFWELE is interested primarily in restoring the Fisherville Pond Dam and its associated waterfowl habitat. Concerns have also been expressed on the condition of other dams in the basin, most notably Lackey Pond Dam on the Mumford River. It would also like to see the problem of contaminated sediments be addressed also.

The Rhode Island DFWER is interested primarily in restoring anadromous fish runs to the river. Rhode Island has expressed concerns about the contaminated sediments washing out from behind dams in Massachusetts.

RIDEM's Narragansett Bay Project (NBP) would like to see the contaminated sediment problems of the Blackstone River be addressed in order to reduce or stop the migration of contaminated sediments to the Bay. It should be noted that during the only two meetings of the Blackstone River Roundtable, convened by the NBP (on December 13, 1990 and February 20, 1991), dredge and disposal options were ruled out by participants, including officials from the states of Massachusetts and Rhode Island, due to fears of aggravating the river's problems by resuspending the contaminated sediments. Instead, dam maintenance and restoration was deemed the best solution to the sediment problem, in order that contaminated sediments be slowly "sealed in" by (hopefully) cleaner sediments.

The U.S. Environmental Protection Agency Region 1 appears to support a wait-and-see position while awaiting results of the EPA-funded comprehensive Blackstone River Initiative water and sediment testing efforts. EPA Headquarters (Washington, D.C.) is currently developing a national contaminated sediment management strategy that may be applicable to the Blackstone River.

Chapter 5: STEPS TO ACHIEVING OBJECTIVES

The objectives established for the Blackstone River (see Chapter 4) are as follows:

1. *Re-establish a healthy and diverse aquatic environment.*
2. *Restore anadromous fish.*
3. *Improve waterfowl habitat.*
4. *Improve recreational opportunities and experiences.*

The steps described in this section are those that must be taken to achieve the various objectives. These steps are not necessarily presented in the order that they would have to be performed. Because of the interrelationship of the many problems and objectives, none of the objectives can be looked at completely independently, although there are independent aspects to each objective. Several steps may be taken to achieve a particular objective, but before solutions are implemented, the impacts on all of the other objectives must be considered. The solutions implemented will be a tradeoff of benefits in certain areas and costs in other areas. Chapter 6 describes how the steps to achieve individual objectives may be integrated into a comprehensive plan.

5.1 Re-establish a Healthy and Diverse Aquatic Environment - Steps

Water quality, contaminated sediment, the condition of dams, and streamflows all directly impact achievement of this goal.

5.1.1 Water Quality - Steps

Many of the water quality steps have either been performed or will be soon by the Blackstone River Initiative or the state management/regulatory agencies. It is critical to determine what constituents in the water are toxic, and to determine if site-specific water quality criteria are needed for the Blackstone River. The need for a sediment transport model to assist in the formulation of site-specific solutions will depend, in part, on how significant resuspended sediment is determined to be to the overall water quality problem. The trace metals water quality model being developed by URI as part of the Blackstone River Initiative models the settling and resuspension of sediments based upon water velocity and total suspended sediments measured in each segment. The model does not account for

sediment grain sizes or their cohesiveness, however, and therefore may over-simplify settling and resuspension in the river.

1. **Establish designated uses for the river.** The uses dictate the set of water quality criteria that are applicable to the river. The two states designated uses of the river many years ago. It has already been noted in this report that the uses have a corresponding set of water quality criteria that may or may not be applicable to the Blackstone River.

2. **Evaluate the adequacy and validity of existing water quality and flow data for use in modelling Blackstone River water quality.** Dr. Wright of URI performed this step for the Narragansett Bay Project (Ref: "Blackstone River 1990").

3. **Fill any identified water quality data gaps.** The Blackstone River Initiative recently measured water quality and flows during dry and wet weather along the Blackstone River, its tributaries, and NPDES discharge locations, and sediment oxygen demand in order to fill the data gaps.

4. **Perform water quality modelling and calibrate the water quality models.** As part of the Initiative, URI is developing and calibrating the models. It will then be the responsibility of the states to run the models and to develop target reductions (see step 15) based upon various model runs. The models being developed may or may not be sufficient to evaluate potential solutions to the problems. Sediment sink and resuspension areas will be identified on a segment basis in the URI trace metals model. As stated above, the model may or may not be applicable for purposes of solution evaluation.

5. **Compare the water quality modelling results to water quality criteria.** This will determine the locations and parameters of water quality problems, and the severity of the problems at various flows. This step is being done by the Initiative.

6. **Assess intangible water quality problems such as odors and appearance.** This step has not been done.

7. **Conduct shoreline surveys on a site-by-site basis to identify illegal and/or problematic point sources.** This step has not yet been completed.

8. **Correlate land use with non-point runoff problems.** This step will be done by the state regulatory agencies.

9. **Determine Total Maximum Daily Loads for river segments with violations.** This step will soon be done by the state regulatory agencies.

10. **Establish target load reductions to Narragansett Bay** for various parameters. This step has not been performed, but should likely be performed by RIDEM's Narragansett Bay Project.

11. **Determine the relationship between contaminated sediment resuspension and settling with dams, streamflows, and hydropower operations.** The relationships of sediment resuspension/settling and water velocities in the water quality models should be verified through field tests. Particle sizes and the cohesiveness between particles have not yet been established, nor have relationships between the two properties been modelled. Blackstone River Initiative water quality modelling assumptions have not been verified, nor are there plans to do so.

12. **Evaluate the impacts that carp play on sediment resuspension.** Personnel from the Massachusetts DEP Office of Watershed Management and EPA have speculated that carp, a bottom-feeding fish, may play a significant role in resuspending sediment.

13. **Assess the relationship between dissolved oxygen levels in the ponds and variations in pond water surface elevations.** The effects of sediment oxygen demand and biological oxygen demand on the water column vary with pond detention time. Pond detention time is a function of pond water surface elevation. Changes in pond oxygen levels will impact downstream oxygen levels too.

14. **Determine the relative significance of the various sources of water quality contamination at various locations.** The relative significance of the various causes should be assessed for each location with water quality criteria violations. URI may attempt to perform this task on a segment basis.

15. **Determine target reductions for each source, including non-point sources and sediment that becomes resuspended, in order to attain water quality goals.** The state regulatory agencies will soon be establishing the target reductions.

16. **Perform water quality modelling with other physical scenarios.** This includes the reactivation of canals, the diversion of water around "hot spots" through new channels or the canals, and the reconstruction or removal or failure of dams. There are no current plans to do this task, despite its importance in the formulation of a comprehensive plan.

17. **Evaluate options to improve water quality.** This step includes many of the potential actions summarized under "Potential Solutions", as well as actions that the state regulatory agencies may independently take. The regulatory agencies may monitor NPDES compliance and perhaps require tighter permit limits; implement best management practices to control and perhaps treat stormwater runoff and combined sewer overflow discharges; encourage source reduction and pretreatment, to locate and then discontinue illegal discharges to storm sewers; and eliminate discharges from landfills and junkyards either through removal, stabilization, or treatment. "Pollution trading" may facilitate economical reductions in contaminant loads, and facilitate mitigation options. The state of Massachusetts has targeted the Blackstone River basin as the first basin in which it will attempt to reopen and reissue the NPDES permits of major and minor facilities in light of their cumulative impacts. Rhode Island is also considering reopening NPDES permits of Blackstone River dischargers.

18. **Implement selected solutions to achieve water quality objectives.**

19. **Monitor water quality to assure that desired objectives are achieved.**

5.1.2 Sediments - Steps

1. **Determine uses of the river** (also see "Water Quality - Steps"). This step has been done by the states.

2. **Determine sediment quality criteria or guidance standards applicable to Blackstone River sediments.** Although the EPA and the states have compared measured sediment chemistry findings to various standards, no one has determined if these standards are applicable to the Blackstone.

3. **Perform chemical analysis on sediments taken at various locations and depths.** This has been done by the Initiative, McGinn, and by Dr. King, although most sampling has been confined to the ponds where the majority of the suspended sediment is believed to have settled. Samples should also be taken in free flowing areas between the ponds to assess the severity of contamination in these reaches. Uniform sediment sampling techniques should be adopted in any future sampling efforts.

4. **Compare measured sediment chemistry to the applicable sediment quality criteria to determine how severely the sediment is contaminated in various locations and depths.** This step was done by the Initiative and by McGinn. For many contaminants, measured contaminant levels far surpassed the "severe effects" levels of the sediment quality criteria.

5. **Perform toxicity tests on contaminated sediments using indicator species.** This step has been done by the Blackstone River Initiative and by McGinn. Further work may still need to be done to duplicate the findings of the latest round of sediment testing. Sediment chemistry of all of the potential "binding agents" should also be determined to determine their impacts. Further work may also be needed to determine the toxicity of the sediments in its various manifestations.

6. **Determine sediment oxygen demand of sediments at various locations.** This step was done by the EPA as part of the Initiative.

7. **Determine what is causing sediment toxicity.** Statistically correlations of toxicity with levels of particular constituents have not yet been undertaken by the Initiative, nor were they by McGinn. Neither the Initiative nor McGinn's efforts was designed to specifically identify what is causing toxicity, however. Further work needs to be done. The impact of disturbing the sediment on its toxicity should also be determined.

8. **Perform both a human health and an ecological risk assessment to determine the risks from the sediment.** This has not yet been done. The risks examined must include those from all media, not just from sediment.

9. **Evaluate the impact of the sudden failure of upstream dams possibly containing contaminated sediments to downstream areas before restoration efforts are performed** (see "Condition and Safety of Dams - Steps"). Areas in which sediments settle must be determined. This would involve investigating the safety/condition of the upstream dams, and consideration of the sediment quality behind the upstream dams and the downstream areas being considered for restoration.

10. **Evaluate the impact of the slow deterioration of upstream dams possibly containing contaminated sediments to downstream areas.** This is similar to the above step.

11. **Determine the significance of present-day sources of contamination (both point and non-point) on sediment quality before restoration efforts are performed.**

12. **Evaluate the impacts of draining ponds to facilitate sampling and removal/treatment/capping work.** The draining of ponds may have to be for a long enough period to dry out the sediments.

13. **Determine the relationship of sediment depth to contamination at various areas.** The utilization of one or two water quality parameters to indicate contamination would reduce costs.

14. **Determine the relationship of sediment size to contamination.** It is known that metals and organics have an affinity to fine-size sediments, such as clays. Massachusetts is investigating this at Rice City Pond.

15. **Conduct a grain size analysis of sediment at various locations.** The Massachusetts DEP's Office of Watershed Management has hired HIR Technology of Portland, Maine to perform grain size analysis for sediments taken from Rice City Pond (only).

16. **Determine appropriate standard for measuring goal attainment.** This will most likely be driven by human and ecological risks.

17. **Prepare detailed (1-2 foot contours) topographic maps of the areas being considered for remediation.** This will include hydrographic surveys, unless ponds can be temporarily drained. For drained sites, it may be desirable to fly sites for economic and safety reasons (contaminated sediments). Color aerial photographs of the river were recently obtained by EPA.

18. **Evaluate options to remediate sediment.** This step involves many of the potential actions summarized under "Potential Solutions".

5.1.3 Streamflows - Steps

1. **Inventory existing and former streamflow gages on the river.** In addition to the USGS gages, the hydropower facilities, Ocean State Power and others should be contacted to determine what gages they may have. Obtain records for these gages.

2. **Obtain and analyze the discharge and withdrawal records of significant NPDES dischargers and water users, respectively, in order to understand their impact on the flow regime.** Proposed diversions should also be examined.

3. **Develop rating curves for canal headgates to determine flows in the canals.**

4. **Assess the adequacy of the existing network of gages to understand the existing flow regime.**

5. **Review FERC permits to ascertain requirements pertaining to the establishment of gages, particularly if an insufficient gaging network exists in the vicinity of hydropower plants.**

6. **Establish needed gages.** Consider real-time reporting gages, particularly in the vicinity of hydropower facilities.

7. **Analyze streamflows at the gages and at other locations.** Average monthly flows may suffice to determine seasonal flows; however, hourly variations should be examined downstream from hydropower plants.

8. **Compare the Blackstone River's streamflow to that of other rivers.** Is it naturally a dry or a wet watershed? How has the natural flow regime been affected by diversions or transfers? This will impact the determination of minimum streamflows (see next step).

9. **Determine desired minimum flows or other types of needed flows for each reach, season, and purpose including biological, recreational, wastewater assimilation, and water supply purposes.** The USFWS's Aquatic Base Flows may be appropriate for biological purposes. Flows used in calculating allowable discharge loads from point source dischargers are typically 7-day 10-year low flows. Methodologies for determining recreational and water supply flows may be controversial.

10. **Establish instream flows based upon the uses that will be protected.** Note: this has been found to be an extremely controversial matter in the state of Massachusetts.

11. **Monitor gage readings, and compare measured streamflows to desired flows.**

12. **Establish likely causes of flow fluctuations and/or insufficient flows.** Causes could include hydropower facilities, water diversions, etc.

13. **Evaluate the impacts of flow fluctuations and/or insufficient flows on water supply, water quality, biological habitat, recreation, sediments (exposed or resuspended), etc.**

14. **Determine long-range goals of others to re-water canals; evaluate impacts.**

15. **Develop operating criteria for dams, hydropower facilities, and canals.**

16. **Review FERC permits to ascertain hydropower operating criteria.** Determine if hydropower operations are operating as required through discussions with owners and gage record evaluation.

17. **Document the problems due to hydropower-caused flow fluctuations to approach FERC and/or hydropower operators with in order to negotiate a solution.**

18. **Document changes in fishery resources due to improved water quality to demonstrate to FERC the current need for minimum streamflow bypasses where none were mandated until the fishery resource improves.** The right to require these flows was reserved by FERC, however.

19. **Petition FERC to address the documented problems.**

20. **Negotiate flows with the hydropower operators for hydropower operations if FERC does not take action.**

21. **Establish a policy on future flow diversions, including future reactivation of portions of the Canal.**

22. **Determine the states and USFWS authority in FERC licensing/hydropower operation.** Also determine the requirements of FERC to follow any comprehensive plans adopted for the river.

23. **Establish an integrated comprehensive review of preliminary permits, new licenses, and license renewals by the states and USFWS.**

24. **Consider various options to achieve goals including flow augmentation, reconsider uses of the river, etc.**

5.1.4 Dams - Steps

1. **Inventory and compile available information on the condition and safety of dams on the Blackstone River and its tributaries.** Sources of information potentially include state, Corps of Engineers and Federal Energy Regulatory Commission dam safety reports, and reports commissioned by the dam owners.

2. **Evaluate the adequacy of the dam safety information.** If inadequate, inspect the dams, and identify any data needs (e.g. piezometers, borings, or slope stability analysis to assess dam stability, etc.). Thorough inspection and analysis are usually required to generate realistic repair cost estimates.

3. **Request that the state determine the spillway capacity required at each dam, given the degree of hazard posed by the dams, the condition of the dams, and any operational procedures at the dams.** It is noted that Massachusetts usually requires that significant improvements at a dam be accompanied by a greater protection level. A dam failure analysis may be needed in order to perform this step. A similar effort may be needed in order to assess the threat posed by the failure of dams upstream from each dam.

4. **Develop an operational plan for each (non-FERC) dam.**

5. **Perform a hydraulic/hydrologic analysis to determine how to increase spillway or outlet capacity, if required (see Step 3 above), or storage in the impoundment.** If potentially applicable, determine how much flood flow could be diverted around the dam if the Blackstone Canal were reactivated or if a new channel were constructed.

6. **Investigate the ownership and purposes or uses of each dam** (including secondary purposes such as waterfowl, recreation, flood control, or fish habitat).

7. **Consult with State Historic Preservation Office, the Blackstone River and Canal Commission and others to obtain their input.**

8. **Evaluate options to address the integrity of the dams.** The answer to this question must be established before all options may be evaluated.

5.2 Enhance Waterfowl Habitat - Steps

The goal of enhancing and restoring significant waterfowl habitat in the Blackstone River can be achieved primarily by maintaining or rehabilitating existing dams with impoundments which contain significant marsh and open water habitat. Maintaining/rehabilitating the dams will insure that stable water levels are maintained, i.e. with impoundment inflows essentially equal to outflows. Stable water levels are required for successful waterfowl nesting and for rearing their young. Low water levels also directly reduce available habitat. Also critical to waterfowl habitat is the preservation of the undeveloped adjacent upland "buffer" habitats.

The major focus of the waterfowl habitat improvement efforts on the Blackstone River is at Fisherville Pond in Grafton, Massachusetts The MADFWELE has identified this pond as very important for waterfowl habitat purposes, and has targeted it for restoration. The outlet structure of the high hazard privately-owned Fisherville Pond Dam was welded open by the owner in the early 1980's in order to drain the pond and allay the state's concerns regarding the dam's safety. The restoration of waterfowl habitat at Fisherville Pond is highly dependent upon solutions to the dam safety and contaminated sediment problems at the site. It is therefore difficult to describe the steps to restore this habitat without involving the steps to solving the other problems. A discussion of some of the issues and potential solutions specific to Fisherville Pond are described in the "Site-specific Solutions" section of this report.

The steps to improving waterfowl habitat not specific to Fisherville Pond, are:

1. **Maintain dams and outlet structures for dams in good condition with significant waterfowl habitat (e.g. Valley Falls Dam/Pond).**

2. **Repair dams and outlet structures for dams that are associated with significant waterfowl habitat** (e.g. Rice City Dam/Pond with its broken flashboards).

3. **Insure that flows at hydropower facilities are run-of-river in accordance with FERC permit or exemption requirements.**

4. **Rehabilitate dams and refill former impoundments that contained significant waterfowl habitat** (e.g. Fisherville Pond Dam).

5. **Determine the amount of undeveloped adjacent upland buffer habitat areas needed for nesting, and protect from future development.**

6. **Restore, enhance, or create additional wetlands (e.g. former Lonsdale Drive-In Theater) using appropriate state-of-the-art wetland design guidance documents.** Some of the major steps involved include:

    a. Conduct wetlands functional assessment at potential restoration sites.

    b. Establish structural/functional goals at potential restoration sites.

    c. Consider natural recolonization of vegetation versus replanting.

    d. Prepare conceptual design and cost estimates based on hydrologic and hydrogeologic analyses at the site, the site layout, the proposed hydrologic regime, the wetland plant species to be used, and the source of wetlands soils to be used in marsh habitat restoration.

5.3 Restore Anadromous Fish - Steps

The objective of restoring anadromous fisheries to the Blackstone River can be achieved by either removing dams, or by providing upstream and downstream migratory fish passage facilities at dams, and by reintroducing migratory fishes to the river's historical spawning and nursery habitat areas. The feasibility and cost-effectiveness of removing dams should be evaluated as part of the selection of a comprehensive plan. Restoration efforts should be conducted in a phased approach, with Phase 1 involving the establishment of fish passage at the lower four dams in order that the target species (i.e. American shad and river herring) be able to reach the significant Valley Falls Marshes spawning and nursery habitat. Non-targeted fish species (e.g. rainbow smelt, sea-run brown trout, striped bass and sturgeon) are also expected to use these facilities. Below the Valley Falls Dam there is only limited spawning and nursery habitat. Future phases of the restoration efforts should also be based upon habitat areas.

An active Strategic Anadromous Fish Restoration Plan (SAFRP) is required by the Federal Energy Regulatory Commission (FERC) before they will require hydropower facility owners to provide for fish passage facilities, even if the right of the Federal government to require these facilities is already stipulated in the FERC license and/or exemption, as it is for the three of the lower four dams (Phase I) under FERC jurisdiction. The purpose of the SAFRP is to demonstrate that restoration of the anadromous fishery resource is feasible and realistic. The states, Federal government, or other organizations will need to find programs and funds to implement fish passage facilities at non-FERC dams. Both Rhode Island's DFWER and the MADFW support the goal of restoring anadromous fish to the Blackstone River.

Specific steps to restoring anadromous fisheries are as follows:

1. **Form a task force to coordinate the individual efforts of various state, federal, and local organizations interested in the restoration of anadromous fish to the Blackstone River.** Dam owners/hydropower operators should be included in the task force. DFWER has taken the lead on this (see "Ongoing Studies and Investigations" section of this report) for now. Involvement of the state of Massachusetts is important to this effort and will become critical after Phase I of the restoration effort is completed.

2. **Determine potential spawning, nursery habitat and forage areas.** Some of this information has been developed for this report (see Appendices) for the Rhode Island segments, but should be done also for Massachusetts segments in order to assess potential basinwide habitat.

3. **Predict future populations of shad and herring based on estimated habitat acreage.** Some of this information has been developed for this report (see Appendices) for the Rhode Island segments. This should also be done for Massachusetts segments, so that the ultimate potential populations for the river can be determined.

4. **Insure that river segments have sufficient flow at all times, particularly downstream of hydropower facilities.** This may require extensive coordination with FERC.

5. **Determine if all river segments have sufficient water quality for each life history stage of the anadromous fish.**

6. **Implement an active interim trap-and-truck stocking program for shad and herring to reintroduce the fish to the habitat above the dams.** A trap-and-truck program is critical to facilitate the documentation of spawning viability and potential production estimates. In addition, the young fish (juveniles) will become "imprinted" on the habitat and will return to spawn there when fish passage is provided or dams are removed. RIDFWER has performed limited trapping and trucking in the lower reaches of the Blackstone River. MADFW could potentially supply American shad from the Connecticut River at Holyoke for the trap-and-truck program.

7. **Develop and implement a Blackstone River Basin Strategic Anadromous Fish Restoration Plan (SAFRP).** The approved SAFRP should describe the task force's goals, document habitat areas and future populations, and document the viability of the fish as demonstrated in the interim trap-and-truck stocking program. The SAFRP should include an anadromous fish passage operational plan with sequential target dates for upstream and downstream passage for all dams based on "trigger numbers" for specific species returning to the base of each dam or passed at dams with fish passage facilities.

8. **Obtain tailwater depths downstream of dams under average flow conditions.** This step is necessary to perform preliminary fish passage designs. The Corps of Engineers installed staff gages and obtained tailwater depths at the lower four dams.

9. **Perform preliminary fish passage designs.** USFWS has performed preliminary design of fish passage facilities for upstream migration for the lower four dams. They have not yet preliminarily designed downstream fish passage facilities due to the far more extensive effort and data gathering required for three of the lower four dams: the three dams with hydropower facilities.

10. **Coordinate with the appropriate State Historic Preservation Office.** This is necessary to identify concerns, particularly of structures registered as Historic Structures, relative to the dam's appearance or historical integrity as a result of the proposed fish passage facilities/modifications. Although the Historic Preservation Offices are likely to support the goal of restoring historic anadromous fisheries, they are likely to have significant concerns at the dams.

11. Petition FERC to require fish passage facilities and any other appropriate project modifications at hydropower dams under its jurisdiction. This step should be performed by the states, in conjunction with the US Fish and Wildlife Service (USFWS). Recent legislation requires FERC to give equal consideration to both power generation and fish passage.

12. Determine the impact of the fish passage facilities on hydropower operations and the reciprocal impact of the operation of the turbines on fish passage. This step will require the cooperation of USFWS and the hydropower owners.

13. Perform final fish passage design and cost estimates. Approximate cost of Denil-type fishways, used by fish for upstream passage, are $15,000 to $20,000 for each vertical foot (difference between dam spillway and tailwater elevations). There are no rules-of-thumb for downstream fish passage costs as they are highly site-specific. Costs will likely be significantly impacted by any historic National Register status or canoe/boat portage that may be included.

14. Construct fish passage facilities at the lower four dams (Phase I).

15. Manage restored fish stocks to protect the newly-introduced fishes until a self-sustaining population has been established. This may include recreational or commercial harvest restrictions.

16. Establish a high level of involvement by the Massachusetts Division of Fisheries and Wildlife (MADFW) once Phase 1 is successfully completed. The MADFW has expressed an interest in extensive involvement at that time (personal communication, Mark Tisa, Ph.D., Assistant Director, Fisheries, 19 April 1994).

17. Re-introduce anadromous fish populations to stocking areas farther upstream (per the SAFRP) in order to document the viability of the fish in those areas.

18. Evaluate the effectiveness of the fish passage facilities to assure the cost effectiveness of future efforts.

19. Document progress in reaching the SAFRP production goals. An annual report should be prepared.

20. Review FERC permits to insure incorporation of fish passage requirements in future licenses and/or exemptions.

21. Develop and implement a public support and involvement program to insure the long-term success of the anadromous fish restoration program.

22. **Identify research needs/conduct needed studies on matters such as the evaluation of potential shad and river herring habitat in Massachusetts or the potential Atlantic salmon habitat in the Blackstone River watershed.** Studies and associated costs should be identified early in the process to assure that the studies receive funding.

5.4 Improve Recreational Opportunities and Experiences - Steps

A comprehensive vision of land use, land-based and water-based recreation, including land/water access issues, and the historic nature of the valley should be integrated in a Greenway/Recreation Master Plan. This effort is largely the domain of the Blackstone River Valley National Heritage Corridor Commission, as well as the states and communities, and as such is not addressed in this report. Recreational areas that should be covered include fishing, bicycling, walking, picnicking, education (interpretation), and boating. Areas that are addressed in this study include only recreational streamflows, impact of dams on recreation (including navigation and personal safety issues), dam safety issues, human health and aesthetic issues associated with recreational use of the river (including fishing and swimming) and preservation/restoration of the physical structures that provide the river its historical significance.

1. **Identify recreational flow needs and determine if the needs are being met.** See Streamflows - Steps.

2. **Investigate feasibility of removing dams to improve navigability.** Consult with the State Historic Preservation offices to obtain their concerns and requirements. This is part of the comprehensive planning efforts.

3. **Investigate the removal of other physical hazards or aesthetic blights in or along the river.**

4. **Investigate reactivation of canals to improve navigability, and attain other goals.** Consult with the State Historic Preservation Office and the Blackstone River and Canal Commission to obtain their concerns and requirements concerning the Canal. Inspect the subject reaches of the Canal for integrity.

5. **Design navigable sluiceways or facilitate portages around existing dams to facilitate boat passage if feasible.** This should be done for dams that won't be removed and where canal bypasses are unavailable.

6. **Analyze sediment samples taken from the canal.**

7. Determine the human health and ecological risks associated with the consumption of Blackstone River fish by humans and wildlife, and with other recreational uses. Perform fish body composition analysis on both whole body and fillet. Whole body analysis is used in ecological risk assessment. Fillet analysis is used in human health risk analysis.

8. Evaluate hazardous waste sites along the river for Superfund program eligibility.

9. Evaluate options to address the integrity of the dams and canals. This step includes many of the potential actions summarized under "Potential Solutions".

Chapter 6: COMPREHENSIVE PLANNING

Comprehensive water resources planning is the integration and evaluation of solutions to individual problems and problem areas within the context of generalized objectives for the entire watershed. The goal of the process is to develop multi-objective solutions for the watershed which maximize the accomplishment of these objectives. Since the solutions to the problems within the watershed can have both positive and negative affects on the objectives, a thorough evaluation of project benefits and impacts is required to select appropriate actions. The greatest challenge in developing a comprehensive plan is the development of a consensus amongst diverse groups with different and possibly conflicting views. The need to establish early and open coordination between all parties cannot be overstated.

It should be understood that a comprehensive, multi-objective river-wide planning effort will enhance the chances of the river's restoration since it will demonstrate to funding authorities that multiple parties have mutually agreed to the proposed restoration efforts with the proposed solutions having been considered by all, hopefully resulting in a consensus on restoration activities. The adoption of a comprehensive plan by federal and state agencies also enhances the value of the effort in that FERC, under section 10(a) (2) (A) of the Federal Power Act, must consider the extent to which proposed hydroelectric projects and the continued operation of existing projects are consistent with "comprehensive plans" adopted by these agencies.

The steps outlined in this chapter discuss one possible method of comprehensively evaluating the problems of the Blackstone River. The steps for achieving the individual objectives are provided in Chapter 5 of this report, however, as previously noted, the achievement of individual objectives should be part of a comprehensive plan, since actions taken to achieve one objective are likely to impact the achievement of other objectives. The approach to comprehensive planning described below is essentially a team approach. An alternate method of comprehensive planning, not described below, is the development of separate strategic plans for the various single objectives by separate committees. The separate strategic plans would then be integrated into a single comprehensive plan after the compatibility of the committee recommendations are examined, prioritized, and a consensus is reached.

The primary objective for the Blackstone River is the re-establishment of a healthy and diverse aquatic environment by moving toward the attainment of clean water and sediment. The quality of the water and sediment is affected by the presence and condition of dams, and by streamflows. Although most of the variables also have independent aspects, water quality is the thread common to most of the river's problems.

The water quality problems are caused by "new" contamination sources, including point and non-point sources, and "old" sources, i.e. from the resuspension of contaminated sediment. Because the regulatory agencies will pursue the reduction of pollution from new sources, regardless of the efforts taken by others, the solutions to problems caused by new sources are not included in this report. Solutions to the problems of old sources are a major focus of this report.

The objectives of restoring anadromous fish to the river, the improvement of waterfowl habitat, and the improvement of the recreational environment are tied to water quality, but may also be amenable to an independent solution. The improvement of the aquatic environment will favorably impact each of these goals, but each also has a majority of steps not related to water quality.

The general approach to solving problems should begin with an investigation of the river on a site-by-site basis. Sites may be defined as individual dams and their associated impoundments. For each site, the relative contribution to the overall water quality problem and the risks to ecological and human health should be assessed. The investigation at each site should include an evaluation of the threat to restoration activities posed by upstream areas, such as from the slow deterioration or sudden failure of upstream dams, and should evaluate downstream impacts of restoration activities such as those caused by the resuspension of sediments.

Answers to the "major questions" discussed in Chapter 4 must be obtained before comprehensive solution formulation can occur and restoration areas prioritized. Water quality and sediment transport modelling (if needed) of various physical scenarios (i.e. with or without specific dams, utilization of the Canal to bypass flows, etc.) should be performed to assess impacts of the options at each site. A comprehensive solution may include a re-examination of the uses of the river if costs substantially exceed benefits, are prohibitive, or if other rivers are deemed more appropriate for such uses.

Steps in comprehensive planning are summarized as follows:

1. **Develop a list of alternatives at each site for each of the stated objectives.** The full range of possible solutions previously-described should be evaluated for applicability. Some sites are more amenable than others to the various potential solutions.

2. **Identify the criteria to be used in evaluating alternatives.** Criteria that could be adopted have been previously-described in this report (Ref: Chapter 4, Formulation and Evaluation Criteria).

3. **Identify the benefits and impacts associated with each alternative.** This step includes both qualitative and quantitative aspects.

4. **Examine the relationship between the solutions at individual sites and at other sites and the river as a whole.** Solutions at one site are likely to either impact or have ramifications at other sites or even to the entire river.

5. **Develop cost estimates for the various alternatives.**

6. **Coordinate the study findings with all appropriate Federal, state, and local entities to solicit opinions and try to reach a consensus or plurality on the best alternatives.**

7. **Select the Plan with the goal of achieving a majority of the objectives in a cost-effective and risk-reducing manner.**

8. **Prepare an Environmental Impact Statement (EIS).** An EIS may be required by the state regulatory agencies to evaluate environmental impacts of proposed solutions and their alternatives.

9. **Implement the Plan.** As stated previously, it has not yet been determined who would perform this step.

10. **Monitor the results of the implemented Plan.** The purpose of this step is to insure that the desired objectives are being met.

11. **Continue interstate and interagency cooperation to achieve goals.**

Chapter 7: RESPONSIBILITIES/PLANS OF ACTION

There are numerous Federal and state agencies, as well as private interests, with roles and responsibilities related to the individual objectives for the river (see Chapter 4). Some parties have a plan of action for the Blackstone River, others have no specific plans. Responsibilities, plans of action, and the status of activities are discussed below, by objective.

7.1 Re-Establish a Healthy and Diverse Aquatic Environment

There are several agencies charged with responsibilities pertinent to the re-establishment of a healthy and diverse aquatic environment. Factors affecting the aquatic environment include water quality, sediment quality, the condition of dams, and streamflows.

7.1.1 Water quality

Water quality is a federal (U.S. EPA) responsibility that has, in part, been delegated to the states. The states have designated uses of the river, adopted the applicable national water quality criteria, and are administering the NPDES permit program. At the request of the commissioners of the environmental protection agencies of Massachusetts and Rhode Island, the U.S. EPA has once again taken a lead in addressing the Blackstone River's water quality problems. EPA involvement was requested by the states because solutions to the river's water quality problems were recognized to be interstate, and state efforts at coordinating investigations and solutions were unsuccessful. The EPA-funded Blackstone River Initiative is a major ongoing cooperative effort with the goal of characterizing the water and sediment quality and toxicity, and benthic macroinvertebrate community health of the Blackstone River. The efforts of the Initiative are expected to result in the collection of sufficient data to enable the states to solve the majority of the Blackstone's water quality problems through the EPA-mandated Total Maximum Daily Load (TMDL) process. If the two states are successful with the TMDL process, and if the point- and non-point source allocations are attained, all segments of the Blackstone would meet water quality standards, and there would be no need for further action to achieve water quality objectives. The likelihood of the attainment of these objectives with implementation of TMDLs alone has been questioned, however, for several reasons including:

1. The adopted water quality standards may be too strict to be economically achieved, and, in fact, may be unnecessarily strict as indicated by toxicity tests.

2. The resuspension of contaminated sediments to the water column could continue to degrade water quality to unacceptable levels unless contaminated sediment problems are addressed (note: impacts have not yet been quantified, although the Initiative hopes that the University of Rhode Island will be able to do so);

Responsibilities and plans of action regarding contaminated sediment are further discussed in the following sections. Responsibilities concerning the development of site-specific water quality criteria to replace possibly overly stringent water quality criteria lie with the dischargers, primarily municipal wastewater treatment plants and industries. The State of Massachusetts is, however, taking the lead by attempting to develop a protocol for developing site-specific water quality criteria that the dischargers could use if they choose to dispute the current criteria. The State of Rhode Island has requested EPA's assistance in investigating the applicability of the adopted water quality criteria to low hardness waters, such as the Blackstone's, but is otherwise leaving the pursuit of site-specific water quality criteria up to the dischargers.

7.1.2 Sediments

Sediment quality is both a federal (U.S. EPA) responsibility and a state responsibility (environmental agencies), however, neither has a specific plan of action to address the river's problems. Although the Initiative has sampled sediments in the Blackstone River and has performed toxicity tests on these sediments, it does not have a further plan of action for the remediation of the sediment problems. EPA is currently developing a sediment management strategy on a national level. EPA officials state that the Blackstone could be nominated as a demonstration project for remediation work or as a demonstration project with regards to the settling and resuspension of the sediments. There is otherwise no existing framework for EPA to address the problem. The applicability of EPA's Superfund (CERCLA) program to the sediment has been questioned as there are no Potentially Responsible Parties (PRPs), because the problem is so geographically-dispersed, and because there are no clear criteria for its cleanup.

The state of Massachusetts has no specific plan of action with regards to the sediment except for limited action at Rice City Pond. The action contemplated for Rice City Pond has aspects only partially related to sediment: bank stabilization and the fixing of the flashboards to minimize sediment resuspension. The State of Rhode Island, where sediment contamination is believed less severe, has no plan of action with respect to sediments.

7.1.3 Streamflows

Streamflows in the Blackstone are altered primarily by hydropower operations, although wastewater treatment plants may also cause alterations. Flow releases from most hydropower dams are under the jurisdiction of the Federal Energy Regulatory Commission (FERC). State and other Federal agencies are, however, initially responsible for commenting on applications for hydropower licenses, and the states are responsible for issuing water quality certificates for the operations. As a result of recent legislation, FERC, during re-licensing, must consider the impacts of hydropower operations on the environment and other objectives, particularly in light of objectives and plans described in any state-or federal-prepared comprehensive plans.

Operations of hydropower facilities may be changed in two ways. If permit requirements are being violated, FERC may be requested to require the licensee to modify its operation to comply with license requirements. FERC says that the onus is on the states to document violations of license conditions, however, before it will take action. If permit requirements are inadequate to achieve goals, FERC may be requested to re-open the licenses. Because most of the hydropower operations on the Blackstone were re-licensed in 1980-1981 for a forty-year period, the next opportunity to alter license conditions could be around the year 2020, unless FERC is persuaded to re-open the licenses. There are two ways FERC could be persuaded to re-open licenses: 1) problems are being caused that were unanticipated at the time of licensing; or, 2) if the resource needs change substantially. The State of Rhode Island is considering requesting that FERC re-open certain licenses, however, the officials are not optimistic about its chances of success.

Farnumsville Dam is an unlicensed hydropower facility "grandfathered" due to its continuous operation pre-dating FERC jurisdiction. Jurisdiction over this facility is unclear. In addition, there is no agency with the responsibility of "smoothing" flows from wastewater treatment plants.

7.1.4 Dams

The condition and safety of dams are the responsibility of the dam owners. Jurisdiction over dam safety lies with the states except for licensed hydropower dams, which are under the jurisdiction of the Federal Energy Regulatory Commission. The Blackstone River's hydropower dams are in relatively good condition. The dams believed to contribute to degraded water quality because of reduced water levels behind them are Fisherville Pond Dam and Rice City Pond Dam. Water levels at Fisherville Pond have been kept lowered at the request of state dam safety officials. The Massachusetts Division of Fisheries and Wildlife had a plan to acquire Fisherville Pond Dam for waterfowl habitat restoration. The plan is on hold, however, until concerns with dam safety and liability are addressed. Massachusetts is planning on fixing the flashboards at the state-owned Rice City Pond, restoring water levels, in part, to reduce the resuspension of sediment. The dam which presents the most concern with respect to dam safety is the Coes Reservoir Dam in Worcester, Massachusetts. This high hazard dam is in fair condition and its outlet is currently blocked with sheet piling. Therefore the only flow control is the spillway. Downstream of the dam is Webster Square in Worcester, and the Blackstone River. Massachusetts dam safety officials are aware of the hazard posed by the dam, but have not taken action to reduce the hazard. The state has had difficulty locating the owner of the dam, which, in non-emergency situations, is usually their first step in reducing the hazard.

7.2 Enhance Waterfowl Habitat

Responsibilities concerning the task of improving waterfowl habitat lie with the states. For the Blackstone, the primary focus is the privately-owned, now partially drained Fisherville Pond. The State of Massachusetts has been considering acquiring ownership of the pond and has negotiated a site-specific agreement to acquire it, with numerous parties participating with various roles. The acquisition is being held up due to concerns with the costs of fixing the dam so that the pond can be safely reflooded. The State of Rhode Island is taking the lead with regards to acquiring the former Lonsdale Drive-In site for waterfowl habitat in the Valley Falls Marshes area.

7.3 Restore Anadromous Fish

The State of Rhode Island Department of Environment Management (RIDEM), Division of Fish, Wildlife, and Estuarine Resources has primary responsibility for managing anadromous fish stocks in rivers in Rhode Island. In addition, RIDEM is responsible for initiating action to introduce anadromous fish to other rivers in the state. RIDEM has initiated action through establishment of the Blackstone River Anadromous Fish Restoration Task Force. RIDEM, however, does not have funds or the manpower to allocate for a significant effort. RIDEM funded this report, in part, with the hope that it could eventually lead to funds to achieve their goals. The successful reintroduction and management of anadromous fish is likely to involve significant partnering between the state and the Federal government. There are two Federal agencies entrusted with anadromous fisheries management responsibilities: the U.S. Fish and Wildlife Service (USFWS), and the National Marine Fisheries Service (NMFS). The USFWS and NMFS are joint partners on anadromous fish restoration on major river systems in New England (e.g. Connecticut and Merrimack rivers). The USFWS and the NMFS have become involved with Blackstone River efforts at the request of RIDEM. Although both USFWS and NMFS staff have attended meetings of the Task Force, neither of the agencies has a current plan of action or timetable for the restoration of anadromous fish to the Blackstone River. It is noted that USFWS has given the Blackstone River a low priority with regards to Atlantic salmon restoration. However, the USFWS has provided assistance to the Task Force mainly by providing a conceptual design of fish passage facilities for the four most downstream dams (see Appendix C of this report for the conceptual designs).

The provision of fish passage facilities at the dams will be the responsibilities of the FERC hydropower dam owners, once FERC chooses to require such facilities. FERC will have to be persuaded of a viable anadromous fish resource through a Strategic Anadromous Fish Restoration Plan (SAFRP) or similar detailed effort, however, before they will require the hydropower owners to construct fish passage facilities. In the case of non-FERC dams, there is no defined responsibility for providing fish passage facilities in Rhode Island. Public and private entities are likely to have to assist the dam owners with expenses of providing fish passage facilities, or else facilities are unlikely to be constructed.

7.4 Improve Recreational Opportunities and Experiences

Responsibility with the task of improving recreational opportunities and experiences usually lies with state and local government as well as private entities. Recreational opportunities are typically the result of piecemeal efforts by these parties. However, because of the national significance of the Blackstone River, the Federal government (Blackstone River Valley National Heritage Corridor Commission) has some responsibility on an inter-jurisdictional river-wide level, hence this study's planning effort that included recreation as one objective. BRVNHCC was one of the sponsors of this effort.

Chapter 8: ESTIMATED COSTS/POTENTIAL FUNDING SOURCES TO ACHIEVE OBJECTIVES

The primary purpose of this investigation is to identify the framework for a comprehensive investigation regardless of which entity ultimately performs the work. A secondary charge of the study was to identify responsibilities and existing plans of action concerning the achievement of the identified goals. Other purposes were to identify remaining actions needed to achieve objectives, estimate costs for these actions, and identify programs and potential funding sources which could potentially be used to conduct further studies needed and to implement recommendations of the studies. Regardless of who ultimately performs the work efforts to reclaim the Blackstone River, major coordinated efforts of all parties will be required due to the magnitude of the problems. A comprehensive planning approach is likely to be the approach that will maximize benefits of the actions. The magnitude of the problems and the costs associated with their elimination and/or mitigation (see study cost estimate below) may require that objectives for the river be modified commensurate with available funding.

The Blackstone River Initiative was formed primarily to address only the water quality problems of the Blackstone River. The final report of the Initiative, when released, should highlight the relative significance of various sources of water quality contamination, allowing the states to take effective action to reduce the problems. State action may result in the form of tighter NPDES effluent limitations and Best Management Practices for non-point sources. Neither the state or the Federal government has a plan of action concerning the problem of contaminated sediment, one of the non-point sources of water quality contamination, because of the wide geographical dispersion of the problem, the lack of parties to blame (historic contamination), and the major costs and controversies that are likely to result with taking action.

It appears that the most significant additional study element (issue) for the Blackstone River involves deciding what, if anything, should be done with the contaminated sediments. This is reflected by the large estimated cost of Tasks 3 through 6 (see below). As stated in Chapter 7, there is a possibility that the sediment contamination could be addressed under the umbrella of EPA's Superfund program, especially if recreational use of the river increases, however, there are no EPA plans at this time to address the Blackstone's problem under this program. It should be noted that the Army Corps of Engineers authority concerning contaminated sediments is limited to dredging for navigational purposes, or as requested and funded by EPA under the Superfund program.

Other major outstanding issues for the Blackstone River involve deciding what to do with aging, ill-maintained dams with little current purpose, and how to achieve fish passage at the dams. Cost of these activities is reflected primarily in Tasks 2 and 13 (for the four most downstream dams only). Although it is the obligation of dam owners to repair, replace or remove unsafe dams, maintain dams, or improve dams (e.g. addition of fish passage facilities, improvement of waterfowl habitat, provision of canoe portage), the costs of doing so may effectively preclude their independent action. Hydropower operations that are marginal in cost-effectiveness may cease operation if FERC requires costly fish passage facilities or other modifications. It is nevertheless the hydropower facility owners' responsibilities to provide fish passage if ordered by FERC to do so. Potential funding sources for fish passage facilities at both non-hydropower and hydropower dams are discussed in detail, at the request of the Rhode Island study sponsor, later in this chapter. Similarly, at Massachusetts' request, potential funding sources for wetlands restoration and enhancement are later discussed in detail.

One potential source of funds for the remaining tasks is through the direct appropriation of funds by the U.S. Congress, particularly in light of the Blackstone River's status as the focus of a National Heritage Corridor. The umbrella of the "Coastal America Initiative", the Narragansett Bay Project and other programs may also facilitate the involvement of agencies with other primary missions (such as the U.S. Army Corps of Engineers), and availability of funds for new initiatives and programs. The leveraging of funds from multiple sources, as the BRVNHCC has been involved with, will be critical because of the magnitude of the costs. Other potential funding sources may be special State appropriations perhaps with matching Federal funds, municipal or county appropriations, the U.S. EPA (currently funding the comprehensive Blackstone River Initiative), the U.S. Fish and Wildlife Service, the U.S. Army Corps of Engineers and other federal and state entities, and private environmental or citizen groups. There are authorities and programs too numerous to mention that may be applied to portions of the framework.

Preliminary cost estimates associated with most of the major activities outlined in this report are provided below. The costs provided are for studies directly related to historic problems of the river, and are limited to the mainstem river (except where tributaries would impact the mainstem river), its many dams and impoundments, and the Blackstone Canal. **The estimated costs are the costs for additional investigations only**, and do not include implementation costs. Implementation costs will vary greatly depending on many variables,

including answers to the four major questions, and the type of comprehensive actions formulated. Estimates for certain significant actions are not provided, however, when they are the clear responsibility of others, and would eventually be performed with or without inclusion in the comprehensive plan framework. These tasks include those associated with upgrading the water quality of present-day inflows to the river, such as from NPDES permit dischargers, combined sewer overflows, stormwater runoff, and illegal dischargers (including illegal hookups to storm sewers). Cost estimates for tasks associated with the cleanup of the land abutting the river, namely the numerous landfills, junkyards, state and federal Superfund sites, are not included. Also not included are costs associated with land use and river access as they are considered the domain of the state planning agencies with assistance provided by the Blackstone River Valley National Heritage Corridor Commission.

Cost Estimate for Tasks Outlined in the Framework*

Task 1: Update prior hydrologic studies. The studies will be needed in order to rehabilitate dams (to size outlets and spillways, and to insure necessary freeboard at dams) and canals, to model sediment resuspension, and to determine aquatic habitat and recreational problem areas. Estimated Cost = $100,000.

Task 2: Evaluate the condition of dams and canals needing evaluation, and recommend actions (not including dams under FERC jurisdiction). Estimated Cost = $500,000.

Task 3: Identify, map, characterize and quantify contaminated sediment in impoundments, free-flowing areas, and the Blackstone Canal. (Do this for enough sites to yield adequate information to make a river-wide decision on sediment remediation options). A plan of action would follow this task. Estimated Cost = $1,000,000.

Task 4: Define the water quality/sediment relationship. Experiments should be conducted in the field to verify the assumptions of resuspension and settling used in the water quality models. Estimated Cost = $150,000.

Task 5: Perform a risk assessment at selected sites. To determine if action must be taken on contaminated sediments. Estimated Cost = $150,000.

Task 6: Evaluate sediment remediation options. Estimated Cost = $100,000.

Task 7: Evaluate wetlands restoration activities. Estimated Cost = $50,000.

Task 8: Determine impacts of National Register status (or eligibility). Estimated Cost = $50,000.

Task 9: Miscellaneous studies. Estimated Cost = $100,000.

Task 10: Comprehensive evaluation/solution selection/Environmental Impact Study (EIS) preparation. Many of the steps to preparing an EIS are covered under the other described tasks. Estimated Cost = $100,000.

Task 11: Investigate flow manipulations downstream from hydropower facilities. Estimated Cost = $50,000.

Task 12: Investigate instream flow requirements. Estimated Cost = $50,000.

Task 13: Provide preliminary design of fish passage facilities at four most downstream dams. Estimated Cost = $250,000.

Total of above = $2,650,000. Add in project management costs of $400,000. Grand total cost is approximately $3 million.

* Cost estimates are for additional investigation only, and do not include implementation costs.

Potential Funding Sources for Fish Passage Facilities

1. The Anadromous Fish Conservation Act. The U.S. Congress annually appropriates funds to the National Marine Fisheries Service (NMFS) to fund state proposed activities related to anadromous fish. The US Fish and Wildlife Service (USFWS) obtains funds under this Act as well, although for the last three fiscal years, no funds were appropriated to USFWS under the Act. Competitive proposals are made to the federal agencies by the states by August of each year. Historically, the NMFS Northeast Region has had between $300,000 to $500,000 to distribute over a 19 state region that includes all of the Great Lakes states. The studies and/or construction are 50% federally funded, 50% state-funded.

2. The Dingell-Johnson Act, as amended by Wallop-Breaux, also known as the Federal Aid in Sport Fish Restoration Act, is administered by the USFWS. These funds are allocated to individual states to support research, habitat improvement, access development, and education activities that are directed at managing the sport fisheries resource. Part of the current allocation the Rhode Island Division of Fish, Wildlife and Estuarine Resources receives is used for ongoing anadromous fish restoration projects, however, using this funding source for new initiatives on the Blackstone River would be difficult. The Division currently obligates its entire Federal Aid obligation to support all of its current sport fish restoration activities. Based on current funding levels, redirecting funds for fish passage facilities on the Blackstone River would require the elimination of a substantial portion of these existing fisheries management projects.

3. The U.S. Environmental Protection Agency established the Chesapeake Bay Interstate Fish Passage Program in 1993. It funds the construction of two fish passage facilities per year in the Chesapeake Bay area. No such program has been established in the New England area.

4. USFWS can be petitioned to join river-specific Anadromous Fish Restoration Committees. USFWS has no funds for such efforts, however.

5. Another potential funding source is the direct appropriation by the U.S. Congress, particularly in light of the Blackstone River's status as the focus of a National Heritage Corridor. The umbrella of the "Coastal America Initiative", the Narragansett Bay Project and other programs may also facilitate the involvement of agencies with other primary

missions (such as the U.S. Army Corps of Engineers), and availability of funds for new initiatives and programs. The states are another potential source of directly appropriated funds.

6. Funding would be provided by the owners of the hydropower facilities if FERC requires the licensed facilities to provide passage.

7. The Army Corps of Engineers may pay up to 75 percent of the cost of fish passage facilities under its Section 1135 program. This program is applicable only to projects constructed by the Corps and therefore would be applicable only to fish passage at the Thundermist Dam in Woonsocket, Rhode Island.

Potential Funding Sources for Wetlands Restoration/Enhancement

1. The U.S. Fish and Wildlife Service has its Partners for Wildlife program. Each state has its own team that considers reclamation of gravel pits, salt marshes, wetlands, and almost anything similar. Approximately $20,000 is available for studies statewide for Massachusetts (typically covers 10 to 12 projects); $20,000 to $30,000 is available for Rhode Island. The Partners program is providing seed money for potential restoration efforts at the former Lonsdale Drive-In adjacent to the Valley Falls Marshes.

2. The National Fish and Wildlife Foundation (NFWF) has grant programs. There is a 50% federal, 50% state split on costs. NFWF funds the U.S. FWS's Partners for Wildlife Program.

3. Ducks Unlimited "MARSH" program. "MARSH" is an acronym that stands for Matching Aid to Restore State's Habitat. In the State of Massachusetts, applications must come through the State's Fish and Game Department. This is not the case for the State of Rhode Island: entities can directly apply for such aid. MARSH funds are available for acquisition, enhancement and restoration of waterfowl habitat areas, but not for engineering feasibility studies.

4. USFWS Challenge Grant program. There is a 50% federal, 50% state split on costs. There is $375,000 available annually for a 13 state region from Maine to Virginia. The

states compete for these funds. Projects are usually in the vicinity of $25,000. Additional monies can come from the Director's Award, a national award.

5. The U.S. Environmental Protection Agency's Section 319 program. This may be applied to wetlands restoration projects that improve water quality.

Chapter 9: SUMMARY

The Blackstone River has great potential value for historic, environmental and recreational purposes. The historic value of the region has been recognized nationally, leading the U.S. Congress to designate the Blackstone River valley a National Heritage Corridor. The Blackstone River itself, however, has several problems including highly contaminated sediments, degraded water quality, aging and deteriorating dams, the loss of formerly abundant anadromous fisheries, degraded waterfowl habitat areas, streamflows insufficient for all desired uses, and less than desirable recreational opportunities. This report, prepared at the request of those interested in improving its environmental and recreational values, outlines a multi-objective comprehensive plan for the Blackstone River's restoration addressing these problems. The objectives of the envisioned comprehensive plan include the re-establishment of a healthy and diverse aquatic environment, the restoration of anadromous fish, the improvement of waterfowl habitat, and the improvement of recreational opportunities and experiences. A comprehensive planning approach is thought to be the best way to achieve various objectives since it recognizes the interrelationships of the various problems, and recognizes that actions taken to achieve one objective will impact other objectives. Because a comprehensive plan includes input from diverse groups with possibly conflicting views and addresses the conflicts before solutions are implemented, a comprehensive approach is likely to enhance the success of the efforts to restore the river.

This report found that the common thread to most of the river's problems is water quality. There have been numerous studies of the water quality problems of the river, however, most do not reflect the recent significant improvements in water quality primarily due to improved treatment at several of the wastewater treatment facilities discharging to the river. In addition, most studies have been limited to either the Massachusetts or the Rhode Island segment. The Blackstone River Initiative, a collaborative effort of the U.S. Environmental Protection Agency, Massachusetts Department of Environmental Protection, Rhode Island Department of Environmental Management and the University of Rhode Island, was formed in 1990, to obtain basic data needed to develop solutions to the remaining water quality problems of the entire Blackstone River. When completed (in 1995), the findings of the Initiative may shed light on the relationship of the contaminated sediments to the Blackstone's water quality problems. Other questions are likely to still remain unanswered. A clear understanding of the factors responsible for toxicity, or lack of toxicity, for both the sediments and the water must be obtained. Impacts of removing dams and otherwise altering

the physical environment need to be evaluated. The risks to human health and the ecological environment at various sites along the river need to be determined to prioritize remediation efforts. Answering these questions is likely to require a major effort and an associated large financial cost. Answers will be needed, however, before intelligent and cost-effective solutions to the problems can be formulated. Comprehensive remediation efforts ultimately selected to reduce human and ecological health risks may include various combinations of dredging or capping of sediments, rehabilitation or removal of dams, and the diversion of some or all of the river's flow around contaminated areas.

Some of the river's problems have solutions with partially independent aspects. The actions taken to attain solutions should still be included as part of a comprehensive plan, however, for prioritization and to insure that unanticipated adverse impacts on other objectives do not occur. Some of the problems with independent aspects and issues include anadromous fish, inadequate and variable streamflows, wetlands restoration, and the improvement of the boating environment. The restoration of anadromous fish is likely to involve the construction of fish passage facilities around the dams that prevent fish migration, but may also involve the removal of dams. Many of the dams are associated with hydropower generation, perhaps complicating the fish restoration efforts at those dams. The operations of the hydropower facilities on the river should be evaluated so that the impacts of their operation upon streamflows can be assessed. The improvement of waterfowl habitat may include the rehabilitation of dams that now impound ponds with inadequate water levels, as well as efforts to improve water and sediment quality. Portages or bypass facilities around dams will need to be provided to improve recreational opportunities.

The most important aspect of this report is the highlighting of the interrelationships of the river's many problems and possible solutions. The interrelationships of the problems and their solutions emphasize the need for a comprehensive planning approach to be applied to the Blackstone River. A comprehensive planning approach will insure that the likely limited dollars available for restoration of the river would be wisely spent and that cost-effective solutions are chosen.

Bibliography.

Blackstone River Valley National Heritage Corridor Commission, Cultural Heritage and Land Management Plan for the Blackstone River Valley National Heritage Corridor, revised April 1993.

Massachusetts Department of Environmental Management, Division of Water Resources, Blackstone River Basin Conceptual Plan, draft report, November 1989.

Massachusetts Department of Environmental Protection, Division of Water Pollution Control, Technical Services Section, Commonwealth of Massachusetts Summary of Water Quality 1992 (305b report), Nov., 1992.

Massachusetts Department of Fisheries, Wildlife, and Environmental Law Enforcement, prepared by Russell Cohen, Agencies, Organizations and Others that are Currently and/or Potentially Involved in Promoting Environmental Quality Within the Blackstone Watershed, October 31, 1990.

Massachusetts Department of Environmental Quality Engineering (DEQE), Office of Planning and Program Management, prepared by Joseph M. McGinn, A Sediment Control Plan for the Blackstone River, July 1981.

Massachusetts Water Resources Commission, Blackstone River Basin Plan, handout at meeting of December 11, 1989.

Narragansett Bay Project (NBP), prepared by Katrina Kipp and Richard Zingarelli, Narragansett Bay Project Briefing Paper - Blackstone R., June 1991.

NBP, prepared by Metcalf and Eddy, Inc., Assessment of Toxic Pollutants in Narragansett Bay, draft report, 1991.

NBP, prepared by Dr. Raymond Wright of the University of Rhode Island, Problem Assessment and Source Identification and Ranking of Wet Weather Discharges Entering the Providence and Seekonk Rivers, Nov. 1991.

NBP, prepared by Dr. Wright et al., Blackstone River 1990, NBP-92-85, December 1991.

Rhode Island Department of Environmental Management (RIDEM), Division of Water Resources, State of Rhode Island and Providence Plantations, The State of the State's Waters - Rhode Island, a Report to Congress (PL 92 - 500, 305b report), August 1992.

Save the Bay, Bring Back the Blackstone, undated (1989 or 1990).

U.S. Army Corps of Engineers, Blackstone River Watershed, Main Report and Appendices, August 1981.

U.S. Army Engineer Waterways Experiment Station, Environmental Effects of Dredging, Technical Notes (EEDP-06-15), December, 1991.

U.S. Environmental Protection Agency (EPA), NBP, RIDEM, and Rhode Island Department of Administration, Comprehensive Conservation and Management Plan for Narragansett Bay, Final Report, December, 1992.

U.S. EPA et al., Blackstone River Initiative, Phase I: Dry Weather Assessment Interim Report of Data 1991, 1992.

U.S. EPA Region I Laboratory, Comparison of Aquatic Toxicity in the Blackstone River of Massachusetts and Rhode Island During Wet and Dry Weather, 1994.

Acknowledgements.

This report was prepared by the New England Division, Army Corps of Engineers, under the general supervision of Mr. Joseph L. Ignazio, Director of Planning, Mr. Paul Pronovost, Deputy Director of Planning, Mr. John Craig, Chief, Basin Management Division, and Mr. John Kennelly, Chief, Long Range Planning Branch. The Project Manager was Mr. Bill Mullen. Biological/Environmental team member was Mr. Bob Davis.

Appendix A - Description of Dams

Appendix A - Description of Dams

Main Stem:

Sources of information for this appendix include previous Corps of Engineers reports, U.S. Fish and Wildlife Service files, Federal Energy Regulatory Commission application and licenses, federal, state and private dam safety reports, several miscellaneous reports, letters, and correspondence, and conversations with various parties. Various sources of information have factual discrepancies and occasional contradictions. In order to facilitate discussion and to compile the information in one place, the information is presented, despite hopefully minor inaccuracies. Dams are described beginning with the most downstream dam.

1. **Main Street Dam, Pawtucket, Rhode Island.** The dam is also known as Pawtucket No. 2 Dam, and Pawtucket Falls Dam. The dam diverts flow to the Bridge Mill Power Plant. It was granted an exemption from licensing on July 21, 1981 (ref: FERC #3689), although mandatory conditions were imposed. Owner is the Blackstone Valley Electric Company (BVE Co.), P.O. Box 1111, Lincoln, Rhode Island 02865. Point of contact for further information: Mr. John McGarry, Engineering Supervisor, Civil Engineering Group, Eastern Utilities, EUA Service Corp., 750 West Center Street, P.O. Box 543, West Bridgewater, Massachusetts 02379, tel. 508-559-1000, ext. 3320. Mr. David Soltys, of BVE Co. is the operator of the hydropower plant, tel. 401-333-1400 ext. 6215 or 6502. The current dam was constructed in 1893-1894, with minor repairs occurring in 1945. The vitrified brick dam, capped with wood, is 170 feet long and 7 feet high on the top of a 16.5 foot waterfall. The dam serves as the divider between the Blackstone River and the tidally-influenced Seekonk River. Installed capacity of 1700 kilowatts (per FERC) or 1500 kilowatts (per BVE Co.) consisting of two equal-size generators of variable output installed in 1983. Length of the 17.5 foot diameter brick-lined penstock is 130 feet, diverting from the Main Street Dam to the Bridge Mill Power Plant. Drainage area above the dam is 478 square miles. Normal water surface covers 1.6 acres and the storage is approximately 2.5 acre-feet (Ref: BVE Co. Main Street Dam Safety Inspection Report, Halliwell Associates, Inc., December 1982 and other references). Spillway crest is at elevation 16.5 feet NGVD (mean sea level datum of 1929). In a letter of May 21, 1981 to FERC, the Department of the Interior requested that the following conditions be imposed in the exemption:

a. A project release of an aquatic base flow of 239 cubic feet per second (cfs) to protect and enhance fish and wildlife resources, and outflows no less than inflows whenever inflows fall below 239 cfs. The applicant-proposed 50 cfs continuous release over the spillway , although less than the 7Q10 flow of roughly 115 cfs, was deemed currently adequate due to the tidal conditions at the base of the dam and the short distance bypassed. Note: subsequent to this time, it was determined that a level of 0.35 feet on the applicant-installed upstream staff gage corresponds to a spillway flow of 50 cfs.

b. Fish-passage facilities and any other appropriate project modifications to be provided when the Rhode Island Division of Fish and Wildlife implements a plan for restoring anadromous fish to the Blackstone River.

The 50 cfs flow over the spillway is reportedly maintained by the use of sensors that automatically turn the turbine(s) on or off and adjust the wicket gates. Various flow scenarios are described in a report on the penstock (Ref.: No. 2 Power Station Penstock Intake Channel Evaluation Analysis, Draft Report, Camp Dresser & McKee Inc., August 1988). The scenarios indicate a maximum intake flow of 1000 cfs (in addition to 40 cfs over the spillway and a 10 cfs dam leakage loss) when total flow is 1050 cfs. Other flow scenarios described in the report indicate that only 50 cfs goes over the spillway with the remainder going through the intake even when the turbines are off, unless streamflow is greater than 1050 cfs. In that case, all flow greater than 1000 cfs goes over the spillway. The hydropower plant is able to run 24 hours/day year-round, depending on the streamflow. The plant has never shut down completely in 10 years until 1993 with its very low flows. According to Mr. Soltys, from January to May, both units are usually generating; from June to December, only one unit is usually on. A chart recorder which has recorded pond level elevations, tailrace elevations, and generator output for the past 10 years is available from Mr. Soltys. BVE Co. is currently interested in raising the dam a few inches to generate additional power.

2. **Slater Mill Dam, Pawtucket, Rhode Island.** The dam is also known as Pawtucket Upper Dam. The dam diverts just enough water to slowly turn the waterwheel under Wilkinson Mill 24 hours per day, year-round. Owner is reportedly the Slater Mill Association, Roosevelt Avenue, Pawtucket, Rhode Island 02860 (Point of contact is Ms. Gail Mohanty, tel. 401-725-8638), although Blackstone Valley Electric Co. plans of 1980 vintage indicate that BVE owns 49/64ths of this dam. An August 15, 1944 news article from the

Pawtucket Times states that, although BVE legally is the principal owner of the dam, it decided to maintain the dam as a historic landmark. The dam was first constructed in 1793 to power the Old Slater Mill. In 1810-11, the raceway was extended to power the Wilkinson Mill. The concrete spillway was built in 1944 as part of an extensive repair project with the 19th century sills and framing retained. The dam is 7 feet high with a spillway crest of approximately 23.0 feet NGVD.

3. **Elizabeth Webbing Mill Dam, Central Falls/Pawtucket, Rhode Island.** The dam is also known as Pawtucket Dam, and Pantex Dam. Diverts some of the flow to Elizabeth Webbing Mill Power Plant. The project is FERC #3037, granted on July 13, 1981, and expiring in the year 2021. Owner is the Roosevelt Hydroelectric Company. Point of contact for further information: Mr. Eliot Lifland, President, Elizabeth Webbing Mill Co., P.O. Box 157, Pawtucket, Rhode Island 02862, tel. 401-723-0500, ext. 1227. Another point of contact is Mr. Harry Jones at 401-723-0500, ext. 1276. Halliwell Engineering Co. of East Providence, Rhode Island performed design work on this dam/hydropower facility. The granite masonry dam, constructed in 1891, is 156 feet long and 10 feet high, with 12 inch flashboards on it. Installed capacity is 670 kilowatts. Drainage area above the dam is 473 square miles. Gross storage of the dam is 150 acre-feet. Spillway crest is at an elevation of approximately 34.9 feet NGVD. The FERC license states that:

> a. An aquatic base flow of 0.5 cfsm (236 cfs) should be maintained at the tailrace, unless inflows are less than this. At inflows below 236 cfs, the greater of inflow or 0.2 cfsm (95 cfs) should be released.
>
> b. Upstream and downstream fish passage facilities should be provided at the dam when an active anadromous fish restoration program is initiated in the Blackstone River. It may be necessary also to modify existing streamflow to allow passage of fish by the dam.

Although there is a minimum streamflow requirement of 238 cfs for downstream habitat, no flows are required over the spillway. The length of the bypassed habitat is 100 feet. Maximum diversion by the hydropower plant is 1060 cfs (per the license application). A tailwater depth of at least 3.5 feet is guaranteed by the Slater Mill Dam backwater, even if no water is going over the spillway.

Normal operation in April and May has minimal flow over the spillway, however, most of the remainder of the year, the spillway is spilling. The turbines have adjustable blades. Normally the floodgates are only open 2 weeks per year. Two-foot contour information for the area was found on a map of the Pleasant View Riverfront Area.

4. **Valley Falls Dam, Cumberland/Central Falls, Rhode Island.** The dam is also known as Central Falls Dam and Samoset Dam. At one time it was known as Sayles Finishing Dam. The curved masonry dam, constructed in the 1850's, is 200 feet long and 10 feet high. Installed capacity is 818 kilowatts consisting of two 409 kilowatt turbines (per FERC). Gross storage behind the dam is 80 acre-feet. The dam diverts some of flow to a 500-foot long 35-foot wide headrace to the powerhouse in the substructure of the Blackstone Valley Falls Elderly Housing Project (condominium complex), then to a 1200-foot long 25-foot wide tailrace. Owner of hydropower plant is Mr. Simeon Bruner of Bruner/Cott, Inc., tel. 617-492-8400. Mr. Bruner said that the owner of the dam itself is the City of Central Falls, although the City could not verify this. (Note: FERC holds the hydropower licensee responsible for the dams). The Valley Falls Mills Gatehouse, built in 1853, has a plaque on it saying to call 401-725-1188 for information. FERC #3063 was granted on August 28, 1981 and expires in the year 2021. The project is operated as run-of-river. Mr. Bruner says that the turbines are fixed blade: they are either on or off, running whenever there is sufficient water. At 400 cfs, the turbines turn off and on, depending on if water levels are rising or lowering. From September to July, there typically is 24 hours per day operation. The following conditions were mandated in the FERC license:

a. An aquatic base flow of 238 cfs shall be released from the project to protect and enhance fish and wildlife resources. Whenever inflows to the project fall below 238 cfs, outflows shall be no less than inflows. The proposed release of 108 cfs through the 1500-foot bypassed reach between the dam and tailrace shall be renegotiated by the applicant and appropriate State and Federal agencies upon implementation of a plan to restore anadromous fish to the Blackstone River or other significant change in fishery management for this section of river.

b. Fish passage facilities and any other appropriate project modifications shall be provided when the Rhode Island Division of Fish and Wildlife implements a plan for restoring anadromous fish to the Blackstone River.

A Fish and Wildlife Service letter of April 30, 1981 notes that the 108 cfs release is for water quality purposes, and also notes that the 108 cfs is less than what they consider an appropriate fish and wildlife aquatic base flow (238 cfs); however, they find the reduced flow acceptable in the absence of anadromous fish runs or significant resident fisheries. Upon implementation of a fish restoration plan or change in the management policy for this section of the river, the 108 cfs (7Q10) may need to be adjusted to maintain suitable aquatic habitat.

5. **Pratt Dam, Cumberland/Lincoln, Rhode Island.** The dam is also known as Lonsdale Dam. The dam is owned by either JM Mills, Inc. of Naples, Florida or Mr. Marszalkowski who also owns the adjacent junk yard.

6. **Ashton Dam, Cumberland/Lincoln, Rhode Island.** The dam was formerly known as Ashton Fiberglass Dam. FERC #11042 preliminary permit was issued on April 15, 1991, but has subsequently expired. The applicant was Ashton Dam Hydro Watts Associates with the point of contact for further information being: Mr. John Lavigne, Rivers Engineering Co., 1600 Candia Road, Manchester, New Hampshire 03103, tel. 603-647-8700. The existing masonry arched dam, owned by Ronci Manufacturing Co., Inc., is 200 feet long and 10 feet high. The pond has a surface area of 35 acres, but negligible storage. The hydropower project would have utilized the existing 700-foot long, 30-foot wide intake canal, and would have included two 30-foot long penstocks (one of 5-foot diameter, one of 2-foot diameter) and a powerhouse with two generating units having a total installed capacity of 750 kilowatts. Spillway crest is at an elevation of approximately 74 feet NGVD. The bypassed reach downstream of the dam would have been 700 feet.

7. **Albion Dam, Cumberland/Lincoln, Rhode Island.** The dam was formerly known as Berkshire Hathaway Dam. FERC #11041 preliminary permit was issued April 15, 1991, but has subsequently expired. The applicant was Albion Dam Hydro Watts Associates with the point of contact for further information: Mr. John Lavigne, Rivers Engineering Co., 1600 Candia Road, Manchester, New Hampshire 03103, tel. 603-647-8700. The existing concrete rollaway dam, owned by American Tourister, Inc. is 300 feet long and 25 feet high. The pond has a surface area of 55 acres and 495 acre-feet of storage. The hydropower project would have utilized the existing 1250-foot long headrace, and an existing powerhouse with one generating unit of 940 kilowatts. Spillway crest is at an elevation of approximately 88 feet NGVD. Drainage area of the dam is 433 square miles. Average flow at the dam is 885 cfs.

8. **Manville Dam, Cumberland/Lincoln, Rhode Island.** The granite masonry dam is 160 feet long (other sources say 240 feet) and 19 feet high, and is in fair condition. The surface area of the reservoir is 58 acres and 58 acre-feet at elevation of 89.4 feet NGVD. Drainage area at the dam is 430 square miles. Owner of the dam is Forte Brothers Inc (per a non-active FERC #10931 preliminary permit of May 1990).

9. **Thundermist Dam, Woonsocket, Rhode Island.** The dam is also known as Woonsocket Falls Dam. The dam diverts flow to the Thundermist Power Plant. FERC #2972 was licensed on November 6, 1980 with the permit expiring in the year 2020. Point of contact on this dam is Mr. Joel D. Mathews, Director of Woonsocket's Department of Planning and Development (tel. 401-762-6400). The U.S. Army Corps of Engineers replaced the old Woonsocket Falls Dam (completed in 1960) with a new 266 foot long, 40 foot high concrete overflow dam equipped with four tainter gates as part of the Woonsocket Local Protection Project, constructed for flood control purposes. Operation and maintenance of the dam was turned over to the City of Woonsocket. The City of Woonsocket is, however, mandated by the Army Corps of Engineers to operate the dam for flood control purposes during flood situations. Gross storage behind the dam is 300 acre-feet (per FERC). Two 8-foot diameter penstocks divert water from an intake 60 foot upstream from the dam to the powerhouse 240 feet downstream from the dam. Installed capacity at the powerhouse is 1200 kilowatts (per FERC). Drainage area above the dam is 404 square miles. The project is subject to Articles 1 to 18 in Form L-15 (Oct. 1975), a standard form that reserves various rights of the federal government including the right to mandate fish passage facilities. Also, per Article 19, the "Licensee shall ... cooperate with the US Fish and Wildlife Service (USFWS) and the Rhode Island Department of Environmental Management (Division of Fisheries and Wildlife) ... for the protection and development of the natural resources and values of the project area". Future fishway needs have been reserved by FERC. No operating criteria is specified in the license. According to the FERC application, the maximum flow diverted from the stream would be 820 cfs. There are no minimum bypass flows required by FERC of the operator despite requested minimum flows by the USFWS, the Rhode Island Department of Environmental Management, and the U.S. Environmental Protection Agency. USFWS had requested that the historic August median flow be adopted for downstream habitat, however, FERC chose to ignore this request. EPA files indicate that the 300-foot bypassed segment is dry 5 months per year. The application says that the average flow is 749 cfs, and the average net head is 18 feet.

EPA files indicate that the turbines run as low as 90 cfs, but usually shut down when flows are under 120 cfs. Maximum flow diverted according to the EPA is 1000 cfs. EPA documented observations of water levels dropping as much as 1.8 feet below the crest of the dam. The trash racks are cleaned once per year after the water level in the impoundment is lowered.

10. **Saranac Mill Dam, Blackstone, Massachusetts.** The dam is also known as the Bridge Street Dam. The masonry dam is 17 feet high and 120 feet long. Owner of all facilities, including the 2000-foot long canal, and a tailrace, is P & C Enterprises. Point of contact is Gerald Paulhaus, P & C Enterprises, 14 Canal Street, North Smithfield, Rhode Island 02895. The pond has a storage capacity of 20 acre-feet and a surface area of 5 acres at elevation 93 feet NGVD (information from non-active FERC preliminary permits). The dam is not in the Massachusetts DEM's dam inventory.

11. **Tupperware Dam, Blackstone, Massachusetts.** The dam is also known as Blackstone Dam, Stone Diversion Dam, Rolling Mill Dam, Rolling Dam, Tupper Dam, and Roaring Dam. FERC #3023 was licensed on October 24, 1980. The license was transferred from the Tupperware Company (a division of Dart Industries Inc.) to Blackstone Hydro Inc. (a subsidiary of Synergics, Inc.) in 1987. Point of contact is Mr. Wayne L. Rogers, President, Blackstone Hydro Inc., 410 Severn Ave., suite 313, Annapolis, Maryland 21403, tel. 301-268-8820. The local operator is Mr. Ralph Smith (tel. no. 401-765-5112). The FERC license states that the project is run-of-the-river, although RIDEM believes that it is not operating this way. The arch-type keyed granite block dam is 200 feet long and 12 feet high, with 12 inch flashboards. Surface area of the pond at normal maximum elevation is 40 acres with a storage of 305 acre-feet. Drainage area at the dam is 261 square miles. An 1100-foot long canal beginning 700 feet upstream from the dam, diverts water to a headpond reservoir formed by a small headgate dam 46-feet long and 16 feet high. The headpond reservoir has a gross storage capacity of 57.5 acre-feet and a surface area of 11.5 acres. The headpond reservoir diverts water to a 300-foot long headrace, and then to 4 penstocks 8-foot in diameter and 22 feet long. At the end of the penstocks is a powerhouse with 2000 kilowatts installed capacity (per FERC). The water exits through a tailrace channel which ends at a 50-feet long and 12 feet high concrete dam that also stores overflow from the headrace. Below this small dam is a 60 foot long wasteway channel leading to two 36 inch diameter concrete pipes 150 long. The pipes empty into a 190 foot long channel that discharges into the river downstream from the tailrace channel.

There is no minimum bypass flow currently required of the licensee, despite the US Fish and Wildlife Service's request for a 130 cfs aquatic base flow and a later (Aug. 15, 1980) request by EPA for 7Q10 flows. According to the FERC license, if water quality improves and the potential for the development of significant fisheries increases, then the Department of the Interior or Division of Fish and Wildlife can recommend minimum flows, as provided by Article 15 of Standard Form L-10 (October 1975), the form that reserves various rights of the federal government. Tupperware may now be voluntarily releasing a minimum flow, although water dropping below the spillway crest has continued to be observed. Essentially all flow up to 851 cfs, except leakage, is diverted into the bypass channel; all flow over 851 cfs goes over the spillway. This essentially dries up the 2400-foot reach from the dam to the confluence with the Branch River 80 percent of the time (EPA says 7 months per year). There is an additional 2800 feet between the confluence of the Branch River to the mill race (total length from dam to mill race is 5200 feet). The right to require the licensee to install fish passage facilities was reserved by FERC. EPA files indicate that not all four turbines run at the same time, and that a peak output of 1600 kilowatts can be generated at 850 cfs. The hydropower facilities are sometimes shut down 1 or 2 months at a time when flows are low. It is reported that recreational boaters have previously negotiated with the owners of this dam to cease diversions at predetermined times to rewater the Blackstone Gorge segment for boating use.

This dam is known to the Massachusetts DEM's Office of Dam Safety both as Stone Diversion Dam (MA00096) and Blackstone Dam (MA01164). No dam safety reports were ever prepared for this dam. DEM's dam safety summary sheet says that the dam, constructed in 1910, is 20 feet high and has a normal impoundment of 790 acre-feet and a maximum impoundment of 875 acre-feet. Purpose of the dam is recreation and water supply (much of this data conflicts with FERC info given above). The dam is considered by the state to be low hazard (i.e. dam located where failure may cause minimal property damage, loss of life not expected).

12. **Rice City Pond Dam, Uxbridge, Massachusetts.** Owner of the dam is the state of Massachusetts Department of Environmental Management, 100 Cambridge Street, Boston, MA 02202, tel. 617-727-3160. The dam serves to divert water to the Blackstone Canal in the Blackstone River and Canal Heritage State Park. According to DEM's dam safety summary sheet, the dam was completed in 1880, and its current purpose is recreation. Drainage area at the dam is 204 square miles. The dam washed out in the flood of 1955 and was replaced by the state with a dam crest three feet lower than before.

The following information is from a dam inspection report (MA00935) prepared by O'Brien and Gere Engineers, Inc. for DEM (date of inspection was July 22, 1987). Original purpose of dam was to impound water to supply the Blackstone Canal during low flow periods. The dam now provides wetlands for wildlife. The dam is a non-linear, earth embankment consisting of three connected sections, with a total length of about 725 feet. East Hartford Ave. crosses over one section of the dam. Maximum pool storage is 1762 acre-feet. Maximum height of the dam is 21 feet. The canal headwater structure is inoperable. Plan and section views of the dam are provided in the O'Brien and Gere Engineers, Inc. report. The dam is classified as high hazard (i.e. failure of the dam would likely cause loss of life and serious damage to property). O'Brien and Gere Engineers, Inc. prepared outlet rating curves for the spillways and the canal headwater gate structure. Condition of the dam was deemed to be fair. O'Brien and Gere Engineers, Inc. prepared a cost estimate for the dam's repair, assuming that the work would be implemented under one construction contract. Total cost of the repairs, including contingencies, was estimated at $2,010,000.

13. **Riverdale Dam, Northbridge, Massachusetts.** The dam was formerly known as Kupfer Dam. FERC #9100 was issued on June 15, 1987 and expires in the year 2017. Owner of the dam and hydropower facilities is James M. Knott, tel. 508-234-6924, 508-234-8715, or 508-234-2456. Mr. Knott purchased the dam from the Town of Northbridge in 1980 for one dollar. The dam was breached from 1976 to 1984, when it was repaired. The dam washed out in the 1955 flood, then replaced by a gated dam structure. The following information is from FERC sources: the dam was originally constructed in 1955 by the Worcester County Commissioners(?). (Other sources say that the turbines were installed between 1898 and 1901). The reservoir covers 11.8 surface acres and includes 88.5 acre-feet with 1400 feet of backwater. The concrete and steel dam is 142 feet long and 14 feet high, but also has a long earthen portion with a road across it. Drainage area at the dam is 142 square miles. At the present time, 150 kilowatts generating capacity is installed, although 280 kilowatts installed capacity was originally proposed. An April 13, 1985 letter from Mr. Knott discusses water quality problem, suggested minimum flows and the McGinn report on contaminated sediment. FERC has required that the licensee operate as an instantaneous run-of-river, which it says will maintain desired flows. Future fish passage construction has been reserved by FERC. The reach bypassed is 1400 feet. A 71 cfs median August flow (no minimum flow required by FERC, however?) at the confluence of the tailrace and the river would backflow into the bypassed reach. An unpublished state

report on minimum flows indicates that the bypass flow is 62 cfs. The application says that the 7Q10 is 44 cfs, and the average flow is 210 cfs.

DEM has no dam safety reports (MA00942) for this dam. DEM says it is now under FERC's jurisdiction. DEM's dam safety summary says that the purpose of the dam is flood control, and the dam is low hazard (i.e. dam located where failure may cause minimal property damage and no loss of life).

14. **Farnumsville Dam, Grafton, Massachusetts.** The dam (MA00576) was formerly known as J.J. O'Donnell Dam. No dam safety reports ever prepared. The dam is owned by Blackstone Depot Street Trust and managed by Mr. Robert Heavey, tel. no. 508-839-5553. Former owner was J.J. O'Donnell Woolens, 6 Depot Street, Grafton, Massachusetts 01536. Normal impoundment is 85 acre-feet, max. impoundment is 150 acre-feet, 234 foot crest length, dam purpose is power generation. Hazard classification is low hazard (i.e. dam located where failure may cause minimal property damage and no loss of life). According to Mr. Heavey, this wooden dam is used to divert water to a hydropower plant that has been in continuous operation since 1917 using the original equipment, in reportedly excellent shape. The hydropower plant was "grandfathered", and therefore is not licensed by FERC. The hydropower plant generates electricity to power the Farnumsville Mill, a textile factory.

15. **Fisherville Pond Dam, Grafton, Massachusetts.** The dam is also known as Fisher Dam. Fisherville Pond Dam is located on the Blackstone River immediately downstream of its confluence with the Quinsigamond River in Grafton, Massachusetts. The 10-foot high 650-foot long earthen dam with stone masonry spillway, was constructed in 1882, along with a 200-foot long spillway. The pond covers 185 acres and holds 250 acre-feet. Storage is 1360 acre-feet at the top of the dam. Drainage area at the dam is 134 square miles. The dam is owned by Mr. Christopher Kaltsas, although the Massachusetts Division of Fisheries and Wildlife (DFW) has been considering acquiring its ownership. The pond was created to supply water to the now-abandoned Fisherville Mill complex located downstream from the dam. The pond was drained in 1982 to facilitate the dredging of gravel out of the Quinsigamond River. The draining was to have been for only a few months, however, due to questions raised by the state's Department of Environmental Management concerning the safety of the dam, the area was not reflooded, and the outlet gate was welded open in 1986 to facilitate permanent draining of the pond, although the outlet has become plugged with debris from time to time, allowing the pond to fill. There is also an abandoned gated

diversion structure (closed and no longer operable) at the west end of the dam on the Blackstone Canal. The Canal passes underneath the abandoned mill and then beneath Main Street, rejoining the Blackstone River a few hundred feet downstream from Main Street. The abandoned mill complex, located downstream from the dam, is now part of the Omni-Duralite Inc. state Superfund (21E) site, with documented releases of heating oil and solvents on the mill grounds. The Canal becomes contaminated with heating oil, but not by solvents.

There have been a number of studies of the integrity of the dam and costs associated with its restoration, with all of the reports describing the dam as being in fair to poor condition. The Corps inspected this dam on September 20, 1978 (Ref: U.S. Army Corps of Engineers Phase 1 inspection report MA00577, Oct. 1978) before the pond was drained. On July 15, 1988, the dam was inspected by the state. The dam is classified as high hazard since it's failure would endanger lives and property in commercial and residential areas along Main Street. Among the problems compromising the dam's safety are trees and vegetation growing on the earthen embankment, burrowing animals, an inadequately sized spillway, and non-operational outlet works. During a Probable Maximum Flood event (60,000 cfs), the dam would be overtopped by eight feet. Spillway capacity (13,000 cfs) can pass the 100 year flood event (9400 cfs), although without adequate freeboard.

Personnel from the Army Corps of Engineers visited this dam in order to review the condition of the dam, identify possible site defects, and provide a gross estimate of the cost to repair the dam. Appendix E of this report provides the results of this work. In summary, the cost of rebuilding the dam is roughly estimated to be $500,000 to $600,000 plus undetermined and possibly major spillway modification and/or dam raising costs. The amount of spillway modification and/or dam raising that will be required will depend on a determination by the state on this matter. The costs estimated do not include the potentially large costs associated with the cleanup of the state Superfund site located immediately downstream from the dam, nor costs associated with razing the dilapidated mill building, if required. Costs associated with possible refurbishing of the Blackstone Canal paralleling Fisherville Pond and passing through the mill site are also not included.

16. **Singing Dam, Sutton, Massachusetts.** The dam is also known as Sagdaw Dam and Pleasant Falls Dam and Chase Road Dam. No dam safety reports have been prepared for this dam (MA01180). The following information is from DEM's dam summary sheet: Normal impoundment is 50 acre-feet; maximum impoundment is 60 acre-feet. Purpose of

the dam is flood control. The gravity dam is 10 feet high, with a 100 foot crest length. The dam is classified as low hazard (i.e. dam located where failure may cause minimal property damage and no loss of life). Owner of the dam is the Town of Sutton, Town Hall, Sutton, MA 01527, tel. 508-865-1123.

17. **New England Power Company Dam, Millbury, Massachusetts.** The dam is also known as Blackstone River Dam. No dam safety reports could be located (MA00578). According to DEM's dam safety summary sheet, the dam is 15 foot high, and has a 100 foot crest length. The dam has a 29 acre-feet normal impoundment, and a 77 acre-feet maximum impoundment. Purpose of the dam is water supply. The hazard classification of the dam is significant (i.e. dam located where failure may cause loss of life and damage to property). Owner of dam may be Chester Hospod, 357 Providence Rd., S. Grafton, MA 01560, tel. 508-839-6867.

Selected Dams on Tributaries:

1. **Quinsigamond Pond Dam, Middle River, Worcester, Massachusetts.** Has a U.S. Army Corps of Engineers Phase 1 inspection report MA00139, August 1978 (inspected on August 3, 1978). The dam is owned by Riley Stoker Corp., 5 Neponset St., Worcester, MA 01613, tel. 508-852-7100. The dam was inspected by the state on June 8, 1988, at which time it was noted that the impoundment has been drained, and the dam is now run-of-the-river.

2. **Coes Reservoir Dam, Tatnuck Brook, Worcester, Massachusetts.** The dam is also known as Coes Upper Dam. The dam may be owned by CK Company or the Federal Deposit Insurance Company (the Massachusetts Department of Environmental Management's Office of Dam Safety is currently trying to determine ownership of this dam). The U.S. Army Corps of Engineers inspected the dam on July 24, 1978 (MA00120, Aug. 1978). The earthen dam is 700 feet long and 20 feet high. Condition of the dam was considered to be fair. Length of the maximum pool is 3500 feet. Storage is 900 acre-feet to the spillway crest and 1400 acre-feet to the top of the dam. Surface area of the pool is 91 acres at both spillway crest and top of dam. The dam is considered to be high hazard because: "The Coes Knife Company is located at the toe of the dam. In addition, highly developed residential areas on Coes Road and Lakeside Avenue are located downstream of the dam." The dam was built in 1865, but raised in 1871 and 1872, and a final 4 feet was added in 1895.

Drainage area at the dam is 10.9 square miles. A topographic survey of the spillway area was prepared in July 1956 by the knife company. The dam was inspected by the state on April 19, 1988, and again by Haley & Aldrich, Inc. (H&A) on June 2, 1993. According to the H&A report, the dam is still considered to be in fair condition. H&A provided several recommendations, along with their costs, that it recommended be undertaken within one year. Purpose of the dam is now recreation.

3. **Coes Lower Pond Dam, Tatnuck Brook, Worcester, Massachusetts.** The dam's ownership is in question (see discussion for Coes Reservoir Dam). The dam was inspected by the state on June 22, 1989 (no dam inventory number). The dam is considered to be a significant hazard (i.e. dam located where failure may cause loss of life and damage to property). The normal impoundment is 30 acre-feet; maximum impoundment is 50 acre-feet. The dam is 14 feet high with a 255 foot crest length. The dam is in fair condition.

4. **Lackey Pond Dam, Mumford River, Whitinsville, Massachusetts.** Very recent (1993) inspection (MA01171) by Pare Engineering of Rhode Island for DEM (report not obtained). DEM's dam safety summary provides the following information: normal impoundment is 180 acre-feet, maximum impoundment is 250 acre-feet. The dam is 13 feet high with a 130 foot crest length. The dam is considered to be low hazard (i.e. dam located where failure may cause minimal property damage and no loss of life). Purpose of the dam is to create waterfowl habitat. Owner is the Massachusetts Division of Fisheries and Wildlife.

5. **Stanley Woolen Mill Dam, Blackstone River Canal, Uxbridge, Massachusetts.** No dam safety reports are available for this dam. DEM's dam safety summary (MA00937) says: Owner of the dam is the Stanley Woolen Co., 140 Mendon Street, Uxbridge, MA 01569, tel. 508-278-2451. The dam was constructed in 1913. Normal impoundment is 85 acre-feet; maximum impoundment is 110 acre-feet. The dam is 11 foot high with a 20 foot crest length. The dam is considered to be a significant hazard (i.e. dam located where failure may cause loss of life and damage to property).

Appendix B - Waterfowl Habitat

APPENDIX B. - WATERFOWL HABITAT

PRESERVATION, ENHANCEMENT AND RESTORATION OF WATERFOWL HABITAT

Problem Identification

Waterfowl Habitat: The loss and degradation of habitat is the major waterfowl management problem in North America (North American Waterfowl Management Plan (NAWMP) 1986). The impacts of agriculture, industry, flood control, navigation and recreational use have reduced the quantity and quality of waterfowl habitat in many parts of Canada and the United States. The NAWMP, signed by the United States and Canada in May 1986, offers "the opportunity to protect America's remaining wetlands and conserve waterfowl with a new spirit of enthusiasm and dedication." Over half of America's wetlands present just 200 years ago have disappeared. Approximately 500,000 acres continue to be lost annually. Of those wetlands that remain, their quality is often times severely degraded by a host of factors, including pollution, sedimentation, agricultural runoff, invasion of pest weeds, and toxic chemicals.

The NAWMP established ambitious goals and specific objectives to secure the future of waterfowl. It called for a commitment among federal and state natural resource agencies, conservation groups, and others to work cooperatively in a spirit of "joint ventures" to pool their talents and resources, and collectively conserve and manage priority habitats in specific geographical regions of the country. The Atlantic Coast Joint Venture Plan (ACJVP), approved in September 1989, steps down the goals and objectives of the NAWMP. It addresses the conservation needs for a broad mosaic of wetland habitats from Maine to South Carolina. The Canadian natural resource agencies and organizations are working separately but cooperatively with the United States organizations to address habitat protection and wetland management needs in the Maritime Provinces (ACJVP 1989).

The Atlantic Coast was identified as one of six priority habitats in need of immediate attention (ACJVP 1989). The black duck was also recognized as a species of international concern because of the long-term population decline. The Blackstone River and its watershed is one of the last significant black duck production areas in Worcester County, Massachusetts (ACJVP 1989). Production appears associated with old impoundments created

by industry at the turn of the century. The dams have created favorable waterfowl marsh and open water habitat. As noted in the previous section on dams, there were approximately 45 dams on the river at one time, albeit many of these have failed during floods. Some of the remaining impoundments are now falling into disrepair and in danger of being drained, resulting in loss of valuable marshland. Mallards, wood ducks and Canada geese also nest in the region as well as rails and other marsh birds. The river valley is a migration corridor for green winged teal, pintail, widgeon, mergansers, buffleheads, as well as the aforementioned species. The recently established Blackstone River and Canal Heritage State Park affords some protection to the Rice City impoundment but several others, including the now drained Fisherville Pond, require rehabilitation, enhancement, protection and management.

The following dams have created significant favorable waterfowl habitat along the Blackstone River (upstream to downstream). The total approximate habitat in acres are rough estimates based on grid dot analysis of U.S. topographic quadrangle sheets and includes both marsh and open water habitat used by waterfowl.

Location	Approx. Habitat (acres)
Fisherville Pond, Grafton, MA	185
Riverdale Pond, Riverdale, MA	60
Rice City Pond, Northbridge/Uxbridge, MA	75
Lackey Pond, Uxbridge, MA (Mumford River)	95
Manville Dam, Lincoln/Cumberland, RI	77
Ashton Dam, Lincoln/Cumberland, RI	20
Pratt (Lonsdale) Dam, Lincoln/Cumberland, RI	63
Valley Falls, Central Falls/Cumberland, RI	183

Sources: H. Heusmann, Waterfowl Biologist, MADFW
C. Allin, Wildlife Bilogist, RIDFWER

The primary waterfowl area of interest to the Massachusetts Division of Fisheries and Wildlife (MADFW) is the rehabilitation of Fisherville Pond with secondary interests at Rice City Pond, Lackey Pond (Mumford R.) and Riverdale Pond. Of the four sites in Massachusetts, Riverdale currently has the least amount of marshland, Lackey Pond, the most.

Historically, the unique Fisherville wet meadow and shallow marsh habitats functioned as premier waterfowl habitat. In Massachusetts, only 7 percent of its ponds are permanent shallow wetlands, hence the significance of rehabilitating Fisherville Pond (personal communication, Wayne MacCallum, Director, Massachusetts Division of Fisheries and Wildlife, 1994). Fisherville Pond was considered to be one of the most productive areas in the State, especially for mallards and black ducks, based on long-term waterfowl banding data primarily using airboat nightlighting. Banding allows biologists to trace waterfowl movements, determine recovery rates (hunting pressure), monitor survival rates of ducks and geese and assess the status of waterfowl populations. MADFW waterfowl banding procedures and records for the Blackstone Watershed sites are provided in Attachment 1 of this appendix.

Fisherville Pond was drained in 1982 to expedite the removal of gravel from the Quinsigamond River. The initial draining was to be only for a few months, but questions about the safety of the dam has prevented reflooding the area since (the gate has been welded open due to fears regarding safety of the dam). At the time Fisherville Pond was drained, emergent marsh vegetation existed along both shorelines of the Quinsigamond River in narrow bands, and as an extensive bed in the southwest cove of the main pond section (Heusmann 1993-4). A second large bed of emergent vegetation existed in the cove northwest of the existing dam. Vegetation on the banks of the Quinsigamond was removed during the dredging operations that precipitated the original draining of the pond. The vegetation beds existing in the coves receded back with the water and currently exist only along the river channel that runs through the former pond.

The second site of importance to Massachusetts is Rice City Pond, located directly on the Blackstone River (Heusmann 1993-4). As its name implies, the area has large stands of wild rice which attracts a variety of waterfowl, especially during the fall migration. In 1983, land around the pond was acquired by the state and a new boat launching site was created. Banding results vary year to year as water levels on Rice City Pond fluctuate with rainfall and boating is only good when water levels are high. For example, in 1993, a drought year, virtually no ducks were seen when the area was boated after a heavy rainfall. In addition, flow regulation and subsequent maintenance of stable water levels within seasonal fluctuations are a current concern since the facilities are presently in disrepair and water levels have been observed to drop at night (Heusmann 1993-4).

The third area of importance for banding in the Blackstone Valley is Lackey Pond Dam, located on the Mumford River in Uxbridge (Heusmann 1993-4). Since 1990, a deteriorating dam has resulted in inadequate water for airboating.

Primary impoundments of interest to the RIDFWER are those behind Pratt (Lonsdale) and Valley Falls Dams (Allin 1994). These areas contain substantial space for nesting and migratory waterfowl within a high density human populace. Maintenance (protection) and repair (enhancement) of these dams will continue to provide quality waterfowl habitat in Providence County, Rhode Island.

Goal

Preserve, enhance and restore significant waterfowl habitat in the Blackstone River.

Objectives

To achieve this goal, the following objectives were established:

1. To protect (i.e. maintain), repair and rehabilitate the existing dams/impoundments which contain significant marsh and open water habitat;

2. To protect buffering undeveloped adjacent upland habitats which are essential to protecting the integrity of these high priority areas (such sites furnish much of the nesting habitat used by waterfowl); and

3. To restore, enhance or create additional wetlands.

Life Histories of Major Waterfowl Nesting Species in the Blackstone River Valley

American Black Duck:

The American black duck was formerly the most important waterfowl species in Massachusetts and Rhode Island. The eastern counterpart to the mallard, the black duck evolved to fill the niche of breeding in forested habitat as well as coastal salt marshes and to wintering along coastal waters in the northeast. Being the only member of the genus Anas

breeding in the northeast, the black duck either did not evolve, or lost, sexual dimorphism, with both sexes adapting the same dark brown coloration that acted as camouflage in the shadowy, forested habitat they became suited to.

Black ducks are ground nesters, like most ducks, laying 7-12 eggs which are incubated 26 to 29 days depending on temperatures. Black ducks rely more on animal matter for their diet than other dabbling ducks. During the winter, black ducks are able to remain farther north than other members of their genus, by utilizing snails and mussels along with the seeds found in salt marshes and tidal flats of the coast.

Naturally secretive, the black duck is sensitive to disturbance and its status as a breeding bird in Massachusetts has declined significantly in the past 40 years as the state has become urbanized. This is apparent from Massachusetts Division of Fisheries and Wildlife banding records. During the 1970's, Division personnel banded an average of 150 black ducks each summer during airboat nightlighting operations. During the 1980's, the average annual catch was only 15 black ducks. Reasons for the decline are related to habitat loss and hybridization with the more numerous mallard.

The black duck remains an important bird in Massachusetts' waterfowl harvest, but much of the harvest is made up of migrant birds from Canada. Black duck specific harvest restrictions have been in place in Massachusetts and Rhode Island since 1982. Most recently, the daily bag limit for black ducks has been restricted to a single bird. The average annual Massachusetts harvest has been 15,000 black ducks in recent years.

Mallard:

Historical records indicate that the mallard was a rare bird in New England in colonial times. It became established as a breeding species in the region only after the use of live decoys was outlawed in 1935 and mallards previously kept for this purpose were liberated to the wild. The species is now firmly established and has become the most common duck nesting in Massachusetts and Rhode Island. Mallards are cosmopolitan, nesting in a variety of habitat from beaver ponds, to cranberry bogs, to urban parks.

The male mallards, with their green heads and white neck ring, are one of the more easily recognized ducks. The brown females are nondescript and similar in appearance to black ducks. A white wingbar above the blue speculum, however, readily distinguishes mallards from black ducks.

Mallards are ground nesters, laying an average of 9 eggs which are incubated for 28 days. Mallards feed more on grains and plant materials than black ducks do, and are commonly found in parks, accepting handouts of bread and other foods. This propensity enables more than 20,000 mallards to winter at sites where they are fed throughout the state, but particularly in eastern Massachusetts.

Mallards now vie with black ducks for first place in the regular season duck harvest with about 11,000 taken annually. But while most of this harvest occurs in coastal marshes and bays, most mallards are harvested on inland sites. The tendency of mallards to move into park sites during the winter serves to reduce hunting pressure in these birds.

Wood Duck:

The male wood duck is among the most colorful of all waterfowl with a crested green head, white facial marking, ruby red eyes, red, white, and black bill markings and body colors that range from a white belly, burgundy chest flecked with white, to a purplish black back. The female is brown with white eye patches.

Unlike mallards and black ducks, wood ducks are cavity nesters, utilizing both living and dead trees. Suitable nesting cavities are a limiting factor in wood duck populations since the ducks require large cavities found primarily in overmature trees. However, wood ducks will also use man-made boxes, and several thousand boxes have been erected in southern New England by both fish and wildlife agencies and by private citizens and organizations.

Wood ducks lay large clutches of 10 to 15 eggs which they incubate about 30 days. Females call the young from the cavity or nest box and lead them to water. Nest boxes placed on poles over water eliminate the sometimes hazardous overland travel ducklings must undergo if they are hatched in a cavity away from a suitable marsh.

Bag limits on wood ducks are more restrictive than for most other ducks with a 2 bird limit generally used. The season on wood duck was closed from the turn of the century until the late 1950s because of low populations. Wide spread use of nest boxes is credited with restoring populations and wood ducks are now at very high levels in the northeast. Wood duck harvests in Massachusetts in recent years have ranged from 4,000 to 12,000 birds, with the bulk of the harvest occurring during the first few days of the season. Wood ducks are warm weather ducks and do not overwinter in Massachusetts, but migrate to southern North Carolina, South Carolina, Georgia and northern Florida.

Canada Goose:

The Canada goose is another species that did not originally nest in Massachusetts or Rhode Island but became established in the state when the use of live decoys was outlawed in 1935 and birds kept as decoys were liberated. With no tradition of migration, geese remained in the state year round. Canada geese discovered excellent nesting conditions on the islands found in man made reservoirs, and lawns and golf courses provided excellent grazing. During the winter, geese could flock to open water found on some of the swifter moving rivers where often people would feed them.

Populations grew slowly at first, but as more geese adapted to a "wild" life style, production increased and recent population estimates now indicate over 30,000 birds are found in Massachusetts and 3000 in Rhode Island by late summer. Canada geese lay only 4 to 7 eggs and do not nest until their third spring. However, Canada geese, unlike ducks, maintain year round pair bonds and with both parents to guard the nest and stay with the young, survival of the goslings is very high.

There are a number of races of Canada geese which vary in size but the resident geese of Massachusetts tend to be large birds, 10 to 17 pounds in weight. All races of Canada geese are otherwise similar in appearance, with a black head and neck, a white cheek patch, light colored belly and chest, grey sides and black wings and tail.

Canada geese are frequently considered nuisance birds, primarily because of the amount of feces they deposit on lawns, putting greens, and sidewalks, but also due to the damage they do to crops, lawns, and water supplies. Control of local populations is sometimes difficult because of federal laws that protect migratory species which include arctic nesting migrant geese. It is not easy to distinguish truly wild geese from non migatory resident birds and hence, local birds can not be destroyed for fear of harming migrant geese.

The Canada goose harvest in Massachusetts averaged 6,000 to 8,000 birds until 1987 when it began to increase, reaching 25,000 by 1990. Restrictions in bag limits designed to protect migrant geese reduced the harvest back to 11,000 birds in 1992.

Biological Resources

Despite generations of development and change, the Blackstone River Valley hosts a rich array of natural resources, evident in its rivers and tributaries, wetlands, farms, forests, fields and rock outcroppings (BRVNHCC 1993). The river's basin, with its tributaries, lakes and ponds, supports numerous wildlife (terrestrial and aquatic) and vegetation habitats.

Through their Natural Heritage Programs, Massachusetts and Rhode Island have identified sites of statewide significance that shelter threatened or endangered species and important natural communities. The Massachusetts program has identified fifteen such sites in the upper Blackstone River Valley where thirteen varieties of rare plants and animals have been sighted (BRVNHCC 1993). The North American Waterfowl Management Plan has identified the Blackstone River corridor as an important flyway for migratory waterfowl (NAWMP 1986) and one of the last significant black duck production areas in Worcester County, Massachusetts (ACJVP 1989). The Valley Falls (Lonsdale) Marshes, within the municipalities of Lincoln, Cumberland and Central Falls, Rhode Island, are considered to be the most valuable wetland wildlife habitat in northern Rhode Island, and have been identified as one of fourteen statewide priority sites (BRVNHCC 1993). The Valley Falls Marshes is the one site designated within the Blackstone River corridor in Rhode Island as habitat for rare species (Enser 1994). The area provides nesting habitat for waterfowl and several of the rarer marsh-nesting birds including Least Bittern and Sora Rail. In addition, the Valley Falls Marshes provides feeding and resting habitat for migratory waterfowl which can number 500-1000 birds during spring and fall migration periods (Enser 1994).

General Design Guidelines for Developing Wetlands for Waterfowl

The following general design guidelines are based primarily on information provided by Heusmann (1993-4).

The ducks most commonly found on inland areas in Massachusetts and Rhode Island are lumped in the category of "dabbling ducks" as opposed to "diving ducks". "Dabbling ducks" are characterized by having legs set under their body which allows easy movement on land and the ability to wing by leaping straight up off land or water. "Diving ducks" have legs set farther back on the body and must run for several feet on land or water before being able to take off. Having legs set farther back allows ducks such as canvasbacks, red heads,

and scaup to dive below the water and feed on plants or animals found on the bottom. Dabbling ducks such as mallards, black ducks, and teal can not dive efficiently, and therefore must restrict their feeding to depths they can reach by "dabbling" beneath the water. They can also feed by "tipping" wherby they reach as far down as they can, tilting their rear up in the air, sort of standing on one's head. Depending on the size of the duck, this is generally 12 to 18 inches deep.

Waterfowl rely on emergent wetland habitat. Since emergent plants grow in water 3 feet or less in depth, water over three feet deep is of limited value to the waterfowl generally found on inland sites. However, water over three feet deep is of significant value to the fisheries. Because the most common ducks found on inland rivers and ponds are mallards, black ducks, and wood ducks, the best habitat for these species are wetland areas with an average depth of 18 inches or less, the depth at which they can dabble for food.

Wood ducks also require upland habitat where they can nest in cavity bearing trees. They also readily feed on acorns in the late summer and into fall. Suitable cavity trees can be supplemented by wood duck nest boxes placed directly in the marsh on poles or pipes.

Canada geese do much of their feeding on upland sites, grazing on short grasses, but they also can feed in water like dabbling ducks by tipping. Their longer necks allow them to feed on plants growing in deeper water than ducks can.

Canada geese, mallards, and black ducks all require stable water levels for successful nesting. Although both mallards and black ducks often nest on upland sites away from water, Canada geese nearly always nest surrounded by water, either on islands, on muskrat houses, or on tussocks in the marsh. Rising water levels after nests have been initiated by geese or ducks can flood such nests, destroying them. Wood ducks, as cavity nesters, are less prone to flooding, but all species do better rearing broods on areas with stable water conditions.

Therefore, in developing habitat for waterfowl on the Blackstone River system, the goal should be to maximize the amount of area impounded to 3 feet or less in depth with the bulk of that flooded to 18 inches or less. Ideally, cover to open water should be a 50-50 split with uniform interspersion as opposed to half of an area being open water and the other half vegetated. Finally, water levels should be stable within seasonal fluctuations.

In addition to restoring, enhancing or creating wetlands, buffering undeveloped upland areas should also be protected from future development. Such sites furnish most of the nesting habitat used by waterfowl.

Design Considerations for the Restoration of Fisherville Pond Marshes

The following design considerations are based primarily on information provided by Heusmann (1993-4).

At the time Fisherville Pond was drained, emergent marsh vegetation existed along both shorelines of the Quinsigamond River in narrow bands, and as an extensive bed in the southwest cove of the main pond section. A second large bed of emergent vegetation existed in the cove northwest of the existing dam.

Vegetation on the banks of the Quinsigamond was removed during the dredging operations that precipitated the original draining of the pond. The vegetation beds existing in the coves receded back with the water and currently exist only along the stream channel that runs through the former pond. If the pond elevation were suddenly raised to its former height, the emergent vegetation growing along the stream channel would be drowned. Instead, water levels should be raised gradually over a period of several years to allow existing beds of emergents to slowly expand back into their former range.

One unknown factor is how bottom compaction may effect the recovery of the emergent plants. At the time of draining, the bottom of much of the emergent marsh vegetation was floating. During airboat nightlight banding operations, persons getting out of the airboat in the marsh vegetation had no solid footing to stand on and the boat itself would drag sections of emergent vegetation along with it. The bottom settled after draining and the dried bottom is quite firm. Alternatively, desirable types of vegetation could be planted as part of the respective marsh restoration plan using appropriate state-of-the-art wetland design guidance documents.

Prior to re-inundation, grading the existing bottom to provide a more varied contour of shallow water (< 18 inches) and deep water (between 18 inches and three feet) areas could make the marsh even better than it was originally. However, disturbing the existing bottom may not be feasible because of the possibility of pollutants existing in the soil/sediment.

The idea of capping the existing bottom to prevent historic comtaminants from entering the water column poses difficulties for developing the pond as a wildlife marsh. The cap would have to be deep enough to prevent aquatic plants from reaching to the old bottom via their root system and pulling heavy metals and the like through their vascular system and redistributing the pollutants after plant decomposition. The question would then be, "will the resulting inundated area provide a suitable amount of shallow water habitat, and where will the required marsh vegetation come from?", since the original vegetation will have been buried. Any plans to cap the existing bottom would first require extensive surveying of elevations to determine if water levels can be raised high enough to provide water in the 1 to 18" range without flooding out private property.

The second precaution would be to cap with material that can support emergent vegetation. Capping with clay or sand would not allow emergents to grow for decades. Capping with top soil would probably be prohibitively expensive.

Potential Wetland Restoration Sites

In addition to maintaining or rehabilitaing the aforementioned dams with impoundments that contain significant waterfowl habitat, the restoration, enhancement, or creation of additional wetlands would also improve waterfowl habitat along the Blackstone River.

Wetlands form in three basic hydrologic systems: depressional, riverine, and tidal. Three critical factors govern the viability of a wetland ecosystem: hydrology, soils/geomorphology, and vegetation. These factors must be addressed in every wetland project regardless of its functions or purpose. Wetland projects normally fall into one of the following four categories (SCS 1992):

Wetland restoration is defined as the rehabilitation of a degraded wetland or a hydric soil area that was previously a wetland.

Wetland enhancement is defined as improvement, maintenance, and mangement of existing wetlands for a particular function or value, possibly at the expense of others.

Wetland creation is defined as the conversion of a non-wetland area into a wetland where a wetland never existed.

Constructed wetlands are specifically designed to treat both non-point and point sources of pollution.

Two potential sites for wetland habitat restoration projects in Rhode Island along the Blackstone River were identified by the Rhode Island Natural Heritage Program (RINHP) (Enser 1994) (Figure 1). The first site is at the location of the former Lonsdale Drive-In Theater, upstream and adjacent to the 200+ acres Valley Falls Pond/Marshes (also called Lonsdale Marshes). The second site is the "Island" located just above Pratt Dam, east of and adjacent to an inactive solid waste landfill in Cumberland.

The former Lonsdale Drive-In Theater, covering approximately 38 acres, is located on the floodplain of the Blackstone River in the town of Lincoln. Currently owned by a company called Macklands Inc., the area has been offered for sale during the past several years. Rick Enser, RINHP Coordinator, nominated this area as a potential site for habitat restoration under the "Partners for Wildlife" program to Greg Mannesto, USFWS Rhode Island's Private Lands Coordinator, in December 1993 (see Attachment 2 of this appendix for details). The Rhode Island Habitat Restoration Team, during their February 1994 meeting, thought the project had merit, but decided the land should first be acquired. They agreed that the first step would be to contact the landowner and negotiate a sale or donation (Enser 1994).

The "Island", encompassing approximately 40 acres, was created by the owner of the landfill. The plan was to divert the river to the west and use the resulting upland for an industrial park. The "Island" is also floodplain which could be rehabilitated to provide additional waterfowl habitat (Enser 1994). However, the landfill occupies the portion of the Peterson/Puritan Inc. Superfund National Priority Listed (NPL) Site, located within the towns of Lincoln and Cumberland, identified as the J.M. Mills Landfill Property (commonly referred to as Marszalkowski's dump). The Peterson/Puritan, Inc. Superfund Site, listed on the NPL in 1983, is divided into two operable units, allowing for resources and response actions to be focused in a phased approach (USEPA 1993). Operable Unit #1 (OU 1) includes the majority of the former Peterson/Puritan, Inc. facilities and adjoining properties exclusive of the landfill. A Record of Decision (ROD) presenting the selected remedial

action for OU 1 was signed in 1993. The landfill, designated as Operable Unit #2 (OU 2), was used as a solid waste landfill from 1954 through the early 1980's (USEPA 1991). The State of Rhode Island ordered the facility to cease accepting any wastes in 1982. A fence was erected around the landfill in 1991 to prohibit public access to the site. Heavy metals, polychlorinated biphenyls (PCBs), volatile organic compounds (VOCs), and semi-volatile organic compounds (SVOCs) have been identified in the landfill (USEPA 1991). The J.M. Mills Landfill (OU 2) is presently pending a Remedial Investigaton/Feasibility Study (RI/FS) (personal communication, David J. Newton, Remedial Project Manager, RI Superfund Section, USEPA Region I, 28 June 1994). However, EPA has set no formal timetable for this activity at the present time. The RI/FS will include an ecological risk assessment that will characterize, qualify and quantify the current and potential environmental risks associated with exposure to landfill derived contamination of soil, sediment, surface water and groundwater if no remedial action is taken within the landfill.

The contaminants in the landfill could potentionally be adversely impacting the nearfield and downstream environment of the Blackstone River including the significant Valley Falls Pond/Marsh area. It may be useful to evaluate the results of the aforementioned RI/FS and subsequent Remedial Design/Remedial Action (RD/RA) studies including potential mitigation of significant environmental impacts prior to conducting any wetland restoration work at the two aforementioned potential sites.

Phased Approach (i.e. steps) for Preservation, Enhancement and Restoration of Waterfowl Habitat

Improvement of Waterfowl Habitat - Steps:

The goal of preserving (protecting), enhancing and restoring significant waterfowl habitat in the Blackstone River can be achieved by acomplishment of the following objectives:

A. Protect (i.e. maintain), enhance (repair) and restore (rehabilitate) the existing dams/impoundments which contain significant marsh and open water habitat;

B. Protect undeveloped adjacent upland "buffer" habitats which are essential to preserving the integrity of these high priority areas (such sites furnish much of the nesting habitat used by waterfowl); and

C. Restore, enhance or create additional wetlands.

The key consideration for improving waterfowl habitat at the existing dams/impoundments is ensuring that stable water levels within seasonal fluctuations are maintained via actual run-of-the-river flow operations (i.e. inflow to the impoundment is equal to outflow or total discharge over the dam and/or via tailrace if a hydroelectric facility). Stable water levels are required for successful waterfowl nesting and all species of waterfowl do better rearing broods on areas with stable water conditions.

The steps to improving waterfowl habitat are as follows:

1. **Maintain dams and outlet structures for dams in good condition with significant waterfowl habitat (e.g. Valley Falls Dam/Pond).**

2. **Repair dams and outlet structures for dams in disrepair with significant waterfowl habitat** (e.g. Rice City Dam/Pond with its broken flashboards).

3. **Insure that flows at hydropower facilities are run-of-river in accordance with FERC permit or exemption requirements.**

4. **Rehabilitate dams and refill former impoundments that contained significant waterfowl habitat** (e.g. Fisherville Pond Dam). Subsequent design considerations are dependent upon how the contaminated sediments, if present, are dealt with (e.g. remediation, no action alternative, etc;) as dicussed in the previous section on Fisherville design considerations and in the report section on contaminated sediment.

5. **Determine the amount of undeveloped adjacent upland buffer habitat areas needed for nesting, and protect from future development** via various management options (e.g. fee title acquisition, conservation easements, cooperative agreements, leases, etc;). This step is also relevant to existing impoundments that need to be maintained (step 1) and repaired (step 2), and for the restoration, enhancement or creation of additional wetlands (step 6).

6. **Restore, enhance or create additional wetlands (e.g. former Lonsdale Drive-In Theater) using appropriate state-of-the-art wetland design documents.** The factors to be considered include but are not limited to the following steps:

a. Screen candidate rehabilitation/restoration sites and conduct wetlands functional assessment.

b. Select site(s) and determine structural/functional goals.

c. Determine structural/functional components.

d. Develop conceptual design and cost estimates based on following analyses:
- preliminary hydrological/hydrogeological analyses (existing sources, limited investigations);
- preliminary civil site layout;
- proposed hydrologic regime;
- identify wetland plant species to be used;
- identify source of hydric soils;
- prepare summary report.

e. Develop final design and cost estimates based on the following detailed analyses:

- detailed analyses of proposed hydrology;
- detailed soils analysis;
- detailed civil site plans including dam repair, water control structures, grading, etc;
- detailed vegetation planting plan driven by hydrology including species, locations, etc;
- alternatively consider natural recolonization via gradual expansion of existing vegetation or combination thereof;
- construction specifications;
- design report;
- monitoring plan (adherence to performance standards);
- construction/inspection oversight.

References Cited

Allin, C.C. 1994. Memorandum from Charles C. Allin, Wildlife Biologist, Rhode Island Department of Environmental Management (RIDEM), Division of Fish, Wildlife, and Estuarine Resources, West Kingston, RI to Robert W. Davis, Environmental Biologist, Environmental Resources Branch, USACE, New England Division, Waltham, MA, 8 March 1994.

Atlantic Coast Joint Venture Plan (ACJVP). 1989. Atlantic Coast Joint Venture Plan, North American Waterfowl Management Plan. U.S. Department of the Interior, Fish and Wildlife Service, September 1989.

Blackstone River Valley National Heritage Corridor Commission (BRVNHCC). 1993. Cultural and Land Management Plan for the Blackstone River Valley National Heritage Corridor.

Enser, R. 1994. Letter from Rick Enser, Coordinator, RIDEM, Division of Planning and Development, RI Natural Heritage Program, Providence, RI to Robert W. Davis, Environmental Biologist, Environmental Resources Branch, USACE, New England Division, Waltham, MA, 4 March 1994.

Heusmann, H.W. 1993-4. Personal communications, memorandums and letter reports from H.W. Heusmann, Waterfowl Biologist, Massachusetts Division of Fisheries & Wildlife, Waterfowl Research Section, Westboro, MA to Robert W. Davis, Environmental Biologist, USACE, New England Division, Waltham, MA.

North American Waterfowl Management Plan (NAWMP). 1986. North American Waterfowl Management Plan: A Strategy for Cooperation. U.S. Department of the Interior, Fish and Wildlife Service and Environment Canada, Canadian Wildlife Service, May 1986.

Soil Conservation Service (SCS). 1992. Field Engineering Handbook (Part 650), Chapter 13: Wetland Restoration, Enhancement, or Creation. U.S. Department of Agriculture, Soil Conservation Service, January 1992.

U.S. Environmental Protection Agency (USEPA). 1991. Action Memorandum: Request for a Removal Action at the Peterson/Puritan Inc. (J.M. Mills Landfill Property) NPL Superfund Site, Cumberland, Rhode Island. USEPA Region I, Environmental Services Division, Lexington, MA, September 25, 1991.

U.S. Environmental Protection Agency (USEPA). 1993. Record of Decision, Peterson/Puritan, Inc. Site, Operable Unit #1, Cumberland/Lincoln, Rhode Island. USEPA Region I, Boston, MA, September 30, 1991.

Appendix B

Figure 1

Appendix B

Attachment 1

Massachusetts Division of Fisheries and Wildlife Waterfowl Banding Records for Blackstone Watershed Sites

One of the functions of the Division of Fisheries and Wildlife is the banding of waterfowl for the U.S. Fish and Wildlife Service. Banding allows biologists to trace waterfowl movements, determine recovery rates (hunting pressure), and monitor survival rates of ducks and geese. Such information is used to assess the status of waterfowl populations and helps to establish waterfowl hunting season regulations that will provide suitable protection for the various species concerned.

The Division primarily has used two methods to band ducks; bait trapping and airboat nightlighting. Bait trapping requires that traps be set out, baited at frequent intervals, and then closed in order to catch ducks. Different types of traps and baits are necessary to catch target species. Target species for Massachusetts are Black Ducks, Mallards, and Wood Ducks. Bait trapping is labor intensive requiring frequent visits to the trapping site, but can be done by one person and can be very effective for banding ducks on some sites.

Airboat nightlighting involves using a boat equipped with an engine driven fan to propel it. Such a setup allows the boat to operate in the vegetated, shallow water areas where ducks roost at night. The combination of engine noise and bright spot lights confuse the birds enough to allow persons in the boat to net them with long handled dip nets. A three person crew is used; a driver and two netters. Airboat night lighting can be a very effective way of capturing large numbers of ducks for banding and enables biologists to band a greater variety of species since special traps are not required. Often, more ducks can be captured in a single night of airboating than during an entire season of bait trapping. Its efficiency makes it a preferred method of banding ducks. The main draw back, however, is that the boat is large and must be launched off a trailer from a suitable launching site. Its large size also means it can not navigate low bridges, or through standing, flooded timber like a canoe used for bait trapping can. The noise generated by the engine also makes it unsuitable for night work in urban areas.

The Division has banded waterfowl and other marsh birds on three sites in the Blackstone watershed. Fisherville Pond in Grafton is located at the confluence of the Blackstone and Quinsigamond Rivers. This area was used for airboat banding from the time the Division acquired its first airboat in 1967, until 1982 (no banding during 1973 or 1974 while awaiting monies for a new airboat engine) when the site was drained to expedite the removal of gravel from the Quinsigamond River. The initial draining was to be for only a few months, but questions about the safety of the dam has prevented reflooding the area since. This area was previously a major banding site for waterfowl, especially mallards and black ducks. Currently, most of the marsh vegetation has died off and the river remains in its channel.

The second site is located directly on the Blackstone River in Uxbridge; Rice City Pond. As its name implies, the area has large stands of wild rice which attracts a variety of waterfowl, especially during the fall migration. This site was first airboated in 1975, but access was difficult and only bait trap banding was conducted between 1976 and 1982, with mixed success. In 1983, land around the pond was acquired by the state and a new launching site was created. Both bait trapping and airboating were used to band ducks at Rice City between 1983 and 1985 but most of the birds banded were captured by nightlighting. In 1986, bait trapping on the site was discontinued, but the airboat was destroyed in an accident during 1987 and so this site was again bait trapped. Airboating resumed with a new boat late during the 1988 season and has continued since. Results vary year to year as water levels on Rice City Pond fluctuate with rainfall and boating is good only when water levels are high. 1993, for example, was a drought year and virtually no ducks were seen when the area was boated after a heavy rainfall.

The third area of importance for banding in the Blackstone Valley is located on the Mumford River in Uxbridge. This river is a tributary to the Blackstone. Lackey Dam Pond was first airboated in 1976. Airboat nightlighting continued until 1982 when the pond was drained to facilitate rebuilding a bridge over the outlet. Airboating was resumed in 1983 and continued until 1986. In 1987, with no airboat available, the area was bait trapped with moderate success. Airboating resumed late in the season during 1988 when a record catch of wood ducks was made. Apparently birds from Rice City Pond moved to Lackey Pond when frightened out by illegal gunning. Since 1990, a deteriorating dam has resulted in inadequate water for airboating.

Results of banding activities on the Blackstone watershed sites are presented below:

Waterfowl/marsh bird banding data for Blackstone Valley study sites.

Fisherville Pond, Grafton

	Species Banded								
Year	MALL	ABDU	MXB	WODU	AGWT	BWTE	VIRA	SORA	COMO	AMCO
1967	23	12	9	2	2	1				
1968	55	31	5	12	5					
1969	12	4	4	3	1	1	1	9	1	1
1970	4	3	1	1		1		2	1	4
1971*	6	5	2	1				2	1	1
1972	36	4	5	8	8			1		
1973	no banding due to budget constraints									
1974	no banding due to budget constraints									
1975*	29	34	6	11	3	4	2	7	5	
1976	64	21	9	28	9	15	3	1		
1977*	10	8		3		1		1		
1978	27	3		26	4	1				
1979	22	2		21		1		2		
1980	36	1		14	3	2		1		
1981	86	15	4	29	6					
1982	area drained, no further banding done									

* mechanical or equipment problems

MALL= mallard
ABDU= American black duck
MXB = mallard-black duck hybrid
WODU= wood duck
AGWT= American greenwinged teal
BWTE= bluewinged teal
VIRA= Virginia rail
SORA= sora rail
COMO= common moorhen
AMCO= American coot

Rice City Pond, Uxbridge

	Species Banded								
Year	MALL	ABDU	MXB	WODU	AGWT	BWTE	VIRA	SORA	COMO	AMCO
1975	28	35	1	15	4	18	1	2		
1977	3	1	2				(bait trapping only)			
1978	1		1	13		1	(bait trapping only)			
1979	4	8	1	35		4	(bait trapping only)			
1980	1			8		4	(bait trapping only)			
1981				41			(bait trapping only)			
1982	54	13	5	17			(bait trapping only)			
1983	33	11		113		1	(bait trap & airboat)			
1984	38	12	1	23	1	2	(bait trap & airboat)			
1985	142	39	7	73	2	1		3 (bait & boat)		
1986*	33	5	1	32						
1987	9			32			(bait trapping only)			
1988*				9						
1989	7		2	42	7			1		
1990	9	1		21				2		
1991	17			78	3			2		
1992	15		1	14	5					
1993				1				2		

* mechanical or equipment problems

MALL= mallard
ABDU= American black duck
MXB = mallard-black duck hybrid
WODU= wood duck
AGWT= American greenwinged teal
BWTE= bluewinged teal
VIRA= Virginia rail
SORA= sora rail
COMO= common moorhen
AMCO= American coot

Lackey Pond, Uxbridge

	Species Banded								
Year	MALL	ABDU	MXB	WODU	AGWT	BWTE	VIRA	SORA	COMO	AMCO
1976	9	12	5	3			2		3	
1977*	20	19		15						
1978	39	11	2	15						
1979	21	19	1	16						
1980	37	14		35						
1981	18	1		20						
1982	area drained, no banding done									
1983	45	17	4	53	1					
1984	6	4		6						
1985	55	31	1	75	9	4		2		
1986*	23	7		26	1					
1987	26	5	1	8			(bait trapping only)			
1988*	10	8	2	114	17					
1989	13	1	1	58	5	1		1		
1990	10	4		7	17	1	(low water)			
1991	dam leaking, water too low to airboat									
1992	dam leaking, water too low to airboat									
1993	dam leaking, water too low to airboat									

* mechanical or equipment problems

MALL= mallard
ABDU= American black duck
MXB = mallard-black duck hybrid
WODU= wood duck
AGWT= American greenwinged teal
BWTE= bluewinged teal
VIRA= Virginia rail
SORA= sora rail
COMO= common moorhen
AMCO= American coot

Appendix B

Attachment 2

STATE OF RHODE ISLAND AND PROVIDENCE PLANTATIONS
INTER-OFFICE MEMO

To: Greg Mannesto Date: December 28, 1993

Dept: U.S. Fish & Wildlife Service

From: Rick Enser

Dept: DEM - Natural Heritage Program

Subject: Nomination for Habitat Restoration Project.

With the information enclosed I would like to suggest a potential site for a habitat restoration project in Rhode Island. The site is the former Lonsdale Drive-In Theater, located on the floodplain of the Blackstone River in the town of Lincoln, an area I briefly mentioned at the October meeting. As outlined in orange on the attached aerial photograph, the subject area covers approximately 38 acres.

Currently owned by a company called Macklands Inc. the area has been offered for sale during the past several years. At one time the present owner had expressed interest in developing the western edge by removing material from within the drive-in to increase the upland edge, as a form of floodplain compensation. It is unlikely that this proposal would receive regulatory approval, and it appears the plan has been abandoned.

I foresee a number of benefits from the restoration of this site which would involve a number of local, state, and federal interests. These include, but are probably not limited to, the following:

1. The Blackstone River Anadromous Fish Restoration Task Force is currently studying the feasibility of reestablishing an anadromous fishery on the Blackstone River. Currently the Army Corps of Engineers (Bill Mullin, Project Leader) is conducting a feasibility study, and the US Fish & Wildlife Service has completed a preliminary assessment for the construction of fish ladders at downstream dams. It is thought that a primary spawning area would be the Lonsdale Marshes just to the south of the drive-in (outlined in red on the aerial, and continuing off the photo to the south). A brief discussion with Chris Powell (Fisheries Biologist, RIDEM Fish, Wildlife & Estuarine Resources) has indicated the potential of creating additional spawning habitat at the Drive-In site.

2. The Lonsdale Marshes, mentioned above, is a 200+ acre wetland complex which has been described as the most valuable wetland wildlife habitat in northern Rhode Island. The area provides nesting habitat for waterfowl (including Wood Duck, American Black Duck, Mallard and rarely Green-winged Teal) and several of the rarer

marsh-nesting birds including Least Bittern and Sora. In addition, the Lonsdale Marshes provides feeding and resting habitat for migratory waterfowl which can number 500-1000 birds during spring and fall migration periods. It appears likely that the restoration of the Lonsdale Drive-In would provide additional marsh habitat for migratory and resident wetland wildlife.

3. As indicated by the enclosed brochure, there is currently a great deal of effort being expended on the Blackstone River National Heritage Corridor. I think that the parties involved in this effort, including the National Park Service, RIDEM, and local organizations, would consider the restoration of the Drive-In as a very positive step, at least aesthetically, for the Heritage Corridor.

4. Another facet of the Heritage Corridor will be construction of the proposed Blackstone Valley bikeway which is currently in planning stages. Lisa Lawless, RIDEM engineer and bikeway project manager, has informed me that it appears the bikeway will traverse the western edge of the Drive-In (as indicated in dashed yellow). Restoration of this area will provide a more aesthetically pleasing landscape for users of the bikeway and, more importantly, may increase the potential for funding through the Federal Highway Administration.

5. As shown on the attached FEMA map, the Drive-In sits entirely within a Zone A floodway. I have slides which show the entire area underwater, a situation that occurs at least every 10 years. Restoration of this area would be of great benefit by increasing flood storage capacity by the removal of impervious concrete and asphalt.

I am certainly not qualified to discuss all the measures necessary for restoring this site. At the least would be the removal of the concrete parking areas, the two large movie screens, and other associated spotlight towers and debris. Discussions with other biologists and engineers would help identify additional work needed to restore the identified habitat types.

If you think this project is appropriate for further discussion by the Restoration Committee I can be prepared for the next meeting to show slides of the site and further discuss its restoration potential. Thanks for your consideration.

Appendix C - Anadromous Fisheries

APPENDIX C - ANADROMOUS FISHERIES

RESTORATION OF ANADROMOUS FISHERIES

Problem Identification

The Blackstone River is the second largest tributary to Narragansett Bay, draining approximately 540 square miles in south central Massachusetts and northern Rhode Island. Historically it supported spawning runs of anadromous species of fish. Each spring adult American shad, river herring (alewife and blueback herring), and Atlantic salmon would ascend the river to spawn (Borden 1993). Unfortunately the extensive construction of dams for water power in the 1800's and the resulting high levels of pollution interrupted and eliminated these runs. The first dam on the Blackstone was constructed in 1793 to generate power for Slater's Mill despite protests of upstream farmers and fishermen (BRVNHCC 1993). The effect of the dam was to destroy the anadromous fishery migration.

Atlantic salmon once constituted a large portion of the commercial catch in Naragansett Bay (Desbonnet and Lee 1991). However, the bay fishery was very short-lived, completely collapsing by 1869. The collapse can be attributed to the salmon's loss of access to suitable spawning grounds in upper reaches of Bay tributaries. All tributaries to the Providence and Seekonk rivers including the Blackstone were dammed by the early 1800s to provide water power for the region's burgeoning industrial needs (Goode 1887; cited in Desbonnet and Lee 1991). The Blackstone River becomes the tidal Seekonk River immediately downstream of the Main Street Dam in Pawtucket, the first dam on the Blackstone River. This closing of the tributaries would have severely eliminated, if not completely eliminated, access of salmon to their historical spawning beds in the upper tributaries upon which they were reared. Although the fishery was not studied to any great extent before it collapsed, and reference to damming as a cause for the fishery collapse is anecdotal, the adverse effect of river dams on salmonids is well documented for Atlantic salmon stocks. With no recruitment occurring in Narragansett Bay for Atlantic salmon populations, local extinction of the area's salmon was rapid and complete.

Alewives, another anadromous fish species, commanded an extensive fishery in Narragansett Bay from the mid-1800s to the turn of the century (Desbonnet and Lee 1991). But by the early 1900s this commercial fishery was declining rapidly, and it was essentially abandoned by 1930. This species, like the salmon, travels up the estuary to spawn, but it is not as reliant as salmon upon gaining access to the upper reaches of tributaries to

successfully reproduce. Although damming of tributaries in Narragansett Bay may have negatively influenced alewive stocks, the fishery's failure is generally attributed to overfishing (Goode 1887; cited in Desbonnet and Lee 1991). During the spring alewife runs, fish traps were placed throughout Narragansett Bay, particularly in the East and West passages and the mouth of Sakonnet Bay. These fish traps were often placed so densely that it was virtually impossible for any alewives to reach the upper bay without becoming lodged in one (Goode 1887; cited in Desbonnet and Lee 1991). Alewives have not been fished on a commercial basis in Narragansett Bay waters since the fishery's collapse (Desbonnet and Lee 1991). Since the late 1950s, however, alewives have begun to return to Narragansett Bay in increasing numbers, and have often been noted in the Providence and Seekonk rivers. Spawning now occurs in some of the lower and coastal tributaries of the bay which remained accessible, and the species appears to be re-populating itself as a springtime visitor to Narragansett Bay waters.

It is apparent that the collapse of Narragansett Bay fisheries for anadromous species is not directly attributable to water quality degradation in the estuary and tributaries (Desbonnet and Lee 1991). Overfishing took a rapid toll on the populations of these fishes as they moved through the bay to spawn, and loss of access to historic spawning areas via the construction of dams, at least for salmon, prevented the rapidly depleted adult stocks from replacing themselves. In the case of the alewife fishery, water quality degradation in the Providence and Seekonk rivers may have caused a loss of suitable spawning habitat, but extraordinary fishing pressure apparently was the main cause of the extinction of the commercial fishery in Narragansett Bay (Desbonnet and Lee 1991). American shad and river herring were not mentioned as anadromous fish species that contributed to the Narragansett Bay commercial catch in Desbonnet and Lee's 1991 report entitled "Historical Trends: Water Quality and Fisheries, Naragansett Bay."

Recent improvement in water quality along with advancements in fishway technology indicate that restoring populations of American shad and river herring to the lower reaches of the Blackstone River system may be possible (Borden 1993). Restoration of Atlantic salmon would be more difficult since historic salmon spawning and nursery habitat areas located in the upper tributaries of the Blackstone River are inacessible due to numerous dams on the mainstem river and tributaries. In addition, most of the tributary headwaters are impounded resulting in feeder streams too warm for salmon survival (Demaine and Guthrie 1979). Currently, Atlantic salmon are not considered as a viable restoration target species for the Blackstone River based upon the analyses and proposed actions in the "Final Environmental Impact Statement (FEIS) 1989-2012: Atlantic Salmon Restoration in New England" issued by

the USFWS in 1989. The Blackstone River was not included among the 28 major rivers in New England that contained significant Atlantic salmon populations in pre-colonial times (MacCrimmon and Gots 1979, Kendall 1935; cited in USFWS 1989) and consequently is not one of the rivers targeted for restoration in the FEIS.

The main restoration concern of the Division of Fish, Wildlife, and Estuarine Resources, RIDEM, is building fishways at the four lower dams (i.e. Phase 1 of the anadromous fishery restoration project) to open sufficient spawning and nursery habitat for self-sustaining populations of shad and river herring. The second major concern of the Division is sufficient flows during critical life-cycle periods during August and the spring upstream migration. Other concerns include but are not limited to seasonal river flows, water releases/flow regulation, water withdrawals, flow duration curves, and water and sediment quality, although contaminated sediments may have little bearing on the success of anadromous fish restoration on the Blackstone since healthy populations of anadromous species exist in river systems with comparable sediment contamination (O'Brien 1993).

However, the restoration of anadromous fish to the Blackstone River is an enormous undertaking and consequently a multi-state, multi-agency (federal, state, local and private) approach is required, combining all existing technical and financial resources for anadromous fish restoration.

Goal

Restore target species of anadromous fish to the Blackstone River. The restoration will be conducted in a phased approach focusing first on short term actions (i.e. lower four dams for Phase 1) and identifying long term activities.

Objectives

To achieve this goal, the following primary objectives were established:

1. To provide for migratory fish passage (upstream and downstream) at dams, and to remove stream blockages wherever feasible to allow access to the river's historical spawning and nursery habitat areas; and

2. Prior to and/or in conjunction with providing fish passage, reintroduce migratory fishes to habitat above present blockages. The young fish (juveniles) will become "imprinted" on the upstream habitat and will return to spawn there when fish passage is provided and/or the stream blockage is removed. Mature returning adult fish can be obtained from other river systems and/or trapped below blockages as they return to the Blackstone and transported and stocked upstream to spawn, or young hatchery-produced fish (fry and/or juveniles) or fish from other streams can be stocked above the blockages.

Life History and Environmental Requirement Summaries of Targeted Anadromous Fish Species for Restoration to the Blackstone River

Detailed life history information/species profiles on the targeted species are available in numerous documents in the literature for American shad (e.g. Weiss-Glanz et al. 1986; etc;) and river herring (e.g. Fay et al. 1983; Gray 1992; etc;). The following briefly summarizes their respective life histories and environmental requirements.

American shad:

The American shad, Alosa sapidissima, is an anadromous member of the family Clupeidae (herrings). Along the Atlantic coast, its range extends from southern Labrador to northern Florida. American shad undertake extensive seasonal migrations along the Atlantic coast. Shad migrate into rivers for spawning beginning in April in southern rivers and continuing until July in the northernmost rivers. Following their postspawning downstream migration, adult shad migrate north along the coast to Canada where they feed during the summer. A southward migration occurs along the continental shelf where the fish winter prior to spring spawning migrations to their natal (river of origin) rivers. Although shad weighing more than 10 pounds are occasionally captured, adult males typically weigh between 1 and 1/2 to 6 pounds, and females between 3 and 1/2 to 8 pounds. Shad may grow to 30 inches in length, but fish 20 to 24 inches long are the largest usually caught.

American shad have a range of life history patterns depending on their river of origin. In southern rivers, shad return to spawn by age 4, and spawn 300,000 to 400,000 eggs; they usually spawn only once, however. With increasing latitude, the mean age at first spawning increases to 5, and the number of eggs per spawning decreases to 125,000 to 250,000 eggs; the number of spawnings per life time, however, increases. In Rhode Island waters,

American shad juveniles leave their nursery areas in late fall, mature in the ocean, and return to the tributaries to spawn in the spring after two to five years. Spawning sites are the same from year to year. Shad spawn at night, usually in shallow water with moderate currents in the main stem of rivers.

The critical life stages of American shad are the eggs, larvae, and early juveniles (Klauda et al. 1991). Water temperatures > 13 C, pH > 6.0, and dissolved oxygen > 5.0 mg/L are important requirements for shad eggs. Larvae require water temperatures of 15.5-26.1 C, pH > 6.7, dissolved oxygen > 5.0 mg/L and suspended solids < 100 mg/L. Requirements of juvenile shad are similar to those of larvae.

River Herring:

River herring is a term applied collectively to alewife, Alosa pseudoharengus, and blueback herring, Alosa aestivalis, because of similarities in appearance, time of spawning, methods of capture, and uses of the commercial catch. Both species are also members of the family Clupeidae (herrings). The coastal range of the blueback herring is from Nova Scotia to Florida; the coastal range of the alewife is farther north, from Labrador to South Carolina. In coastal rivers where the ranges overlap, the fisheries for the two species are mixed. Both species are anadromous and undertake upriver spawning migrations during spring. Few individuals of either species exceed 12 inches in length or about 2/3 of a pound in weight. Alewives may live as long as 10 years and reach a length of 14 inches. Blueback herring live for about 7 or 8 years and reach a maximum length of about 13 inches.

Alewives spawn in the spring when water temperatures are between 16 C and 19 C; blueback herring spawn later in the spring, when water temperatures are about 5 C warmer. Fecundity (reproductive potential) and age at maturity for both species are similar. Between 60,000 and 300,000 eggs are produced per female; and maturity is reached at ages 3 to 5, primarily at age 4. In Rhode Island waters, river herring juveniles leave their nursey areas in fall, mature in the Atlantic Ocean, and return after two to five years to the tributaries for spring spawning.

Despite their similarities, there are important life history differences (Loesch 1987). Alewives select lentic (still water) areas for spawning. Blueback herring spawn in lotic (moving water) sites in the sympatric distribution (i.e. when they occupy the same range as

alewife), but use primarily lentic sites in their allopatric (occurring in different areas) range. The differential selection of spawning sites by blueback herring reduces competition with alewives for spawning grounds in sympatry. River herring return to natal streams for spawning, but they also readily colonize new streams or ponds and reoccupy streams from which they have been extirpated.

The critical life stages of alewife (AW) and blueback herring (BH), like the American shad, are the eggs, larvae, and early juveniles (Klauda et al. 1991). Water temperatures > 11 C (AW) and 14 C (BH), pH > 5.0 (AW) and > 5.7 (BH) and dissolved oxygen (DO) > 5.0 mg/L (AW and BH) are important habitat requirements for eggs. Larvae require water temperatures at least 8 C (AW) and 14 C (BH), pH > 5.5 (AW) and > 6.2 (BH), DO > 5.0 mg/L, and suspended solids < 500 mg/L.

Habitat Issues:

In addition to the blockage of shad and herring spawning migrations by dams, acid deposition and subsequent stream acidification may be a major problem in the decline and/or restoration of many anadromous fish. Laboratory studies have shown that river herring eggs and larvae suffer high mortalities below pH 6.5 and total dissolved aluminum levels greater than 0.34 mg/L. As reported in the Chesapeake Bay Program (1989), there is a high incidence of low pH and high dissolved aluminum events in many Eastern shore streams following heavy spring rains.

2.3 Biological Resources

The existing information on resident fishery resources in the Blackstone River in Rhode Island and Massachusetts is limited. Comprehensive fisheries surveys of the Blackstone River Watershed were conducted by the Rhode Island Division of Fish and Wildlife in 1975 (Demain and Guthrie 1979) and the Massachusetts Division of Fisheries and Game in 1973 (Bergin 1974). Twenty-one sampling stations including three on the mainstem of the Blackstone River and thirty-two sampling stations including five on the Blackstone mainstem were surveyed by Rhode Island and Massachusetts, respectively. A fisheries survey of the Blackstone River was also conducted in May 1981 in a cooperative effort by the Massachusetts DEQE and Division of Fisheries and Wildlife as part of the previously described "Sediment Control Plan for the Blackstone River" study (McGinn 1981). Seven sites located on the mainstem of the Blackstone River and one site on the Mumford River were surveyed.

Additional but limited fisheries data is also available from more recent site-specific surveys conducted in the Blackstone River for various purposes (e.g. in the vicinity of Woonsocket, Rhode Island, for the Ocean State Power water withdrawal (EEI 1987); fish toxics monitoring in Massachusetts by OWM). The earlier surveys indicated that the fishery resources present were generally typical of warm water habitats, however, the species found were only those capable of surviving in poor quality waters resulting in resident fish populations that were undesirable for sport fishing. Results of a biomonitoring survey of the Blackstone River and selected tributaries undertaken by the Massachusetts Division of Water Pollution Control's Technical Services Branch as part of a June 1985 water quality investigation revealed benthic macroinvertebrates that indicated some of the worst water quality to be found in Massachusetts inland streams (Johnson et al. 1992).

Recent fish community surveys reflect improvements in water quality. While the fishery is still characteristic of warm water habitats, there is a greater number of game species present. Some of these species (e.g. yellow perch, white perch, largemouth bass, smallmouth bass, black crappie, chain pickerel, and northern pike) are more typical of better water quality conditions. In 1994, the Blackstone River in Rhode Island was stocked by the RI Division of Fish, Wildlife, and Estuarine Resources (RIDFWER) on three separate occasions with a total of 2285 adult brown trout, a cold water habitat species. The improved water quality and observed productivity indicated some potential for a quality fishery. The primary limiting factor appears to be the relatively high water temperatures reached during the summer months. Public opinion of the program has been favorable with RIDFWER receiving positive comments throughout the fishing season. During prolific caddis "hatches", many people were observed fishing with fair success. The fish appeared to be in good condition. The summer survival will be evaluated during the fall of 1994.

Reintroduction of anadromous fishes to their previous spawning grounds in the Blackstone will also have a positive effect on the ecology of the river (Loesch 1987). In freshwater areas where herring have been restored, studies show that resident fish populations were enhanced. The juvenile herring produced in the spawning run serve as a food supply for bass and other resident species. All life stages of anadromous herrings are important forage for many freshwater and marine fishes. In addition, birds, amphibians, reptiles and mammals have also been documented as predators. The mortality of anadromous alewives provides an important source of nutrients for headwater ponds.

Macroinvertebrate population data collected in 1991 as part of the Blackstone River Initiative, when compared to macroinvertebrate community data collected in 1985, showed improvements at most stations (USEPA et al. 1991). Additional improvements in macroinvertebrate populations are expected due to the Upper Water Pollution Abatement District wastewater treatment plant's adding dechlorination of its wastewater in the fall of 1993.

Potential Solutions for Removing Barriers to Migratory Fish Passage

Barriers, both upstream and downstream, to fish migration exist on nearly every tributary of the Blackstone River system. The most well known are the hydropower dams, but fish migration can be blocked by a structure only one foot high, such as a road culvert. A wide variety of small to mid-sized dams are found in the Blackstone River watershed. These dams include hydroelectric, historic mill and flood control dams, as well as wildlife or recreational impoundments. At one time there were approximately 45 dams on the mainstem Blackstone River, however, most of these have washed out during floods. Currently, there are 17 dams on the river, all of which are between 7 and 25 feet high, with the exception of the 40 feet high Thundermist Dam in Woonsocket (see Table 1: Hazard and Condition of Dams on the Blackstone River in Chapter 3 of the main report and Appendix A).

The structures which act as upstream and/or downstream barriers to fish migration are diverse, ranging from hydropower dams to small road culverts. No one solution can address all situations. The following lists the diversity of potential solutions to address these problems.

Breaches:

The simplest solution for fish passage is to remove part or all of an obstruction. Breaching is a practical alternative when the barrier is no longer in use or the benefits of passage favor a modification to the structure. A breach solves both upstream and downstream fish passage needs. However, other issues (e.g. contaminated sediments) may be critical in determining whether this solution is practical.

Fish Ladders:

A common solution is to install a fish passage facility, or fishway, to allow fish to pass over or around an obstruction during its upstream migration. On smaller blockages, a "fish ladder" can be used. This is an inclined water channel structure with a series of baffles or weirs which interrupt and slow the flow of water. The fish swim up the ladder just as they would natural rapids.

Locks:

Fish locks pass fish around dams by raising the water level in a chamber, which the fish have already entered, until the water surface rises above the barrier. Locks are useful for certain fish, such as striped bass and sturgeon, which generally will not use fish ladders.

Fish Lifts:

For larger dams, where fish ladders may not be practical, a mechanized device known as a "fish lift or elevator" is often used. Fish are attracted by flow into a confined space and elevated in a volume of water over the dam. In some cases, fish will be transported in special tank trucks around several dams until all are fitted with passage facilities.

Retrofit:

Some structures such as culverts and gauging stations om smaller tributaries can be redesigned to provide the gradient and flow necessary for fish passage. Culverts can be buried below the streambed and gauging stations can be notched or modified to allow fish passage.

Fish passage technology has improved greatly in recent years. Several New England states have active and successful programs providing passage for migratory fish. For example, in Massachusetts, nearly 130 fishways maintain migrations on approximately one hundred tributaries. On the Connecticut River, migratory fishes have been restored to 174 miles of historic habitat as a result of fishway operations at 3 dams.

Upstream fish passage facilities allow adult anadromous fish to reach their spawning grounds but often do not provide for the safe return (e.g. minimizing the passage of fish through the hydroelectric turbines) of the adults and young to the marine environment. The lack of downstream fish passage facilities or inadequate facilities could have a significant negative impact on fish populations. Therefore, downstream fish passage facilities are also required at all dams on the Blackstone including the non-hydro dams but particularly at hydroelectric facilities to minimize entrainment of downstream-migrating fish in turbines.

A variety of downstream fish passage screening devices have been employed to prevent fish from becoming entrained in the turbine intake flows at hydroelectric facilities (USDOE 1991). The simplest, spill flows over the dam spillway, can transport fish over the hydropower dam rather than through the turbines. Typically, this is accomplished by placing a downstream migrant notch in the non-overflow section usually adjacent to the upstream fishway exit channel and providing for a plunge pool for the fish to safely fall into (see Attachment 1 of this appendix for details). Increased spillage at non-hydropower dams may be used to flush fish over a dam via a notch or through a bypass. At the other end of the scale, more sophisticated physical screening devices (e.g. angled bar racks) and light- or sound-based guidance measures are being studied to bypass downstream migrating fish with a minimal loss of water that could otherwise be used for power generation. There is presently no single downstream fish passage protection system or device which is biologically effective, practical to install and operate, and widely accepted to regulatory agencies (USDOE 1991) (see subsequent section on "Potential Impacts and Environmental Mitigation at Hydroelectric Projects" for more details).

Conceptual Fishway Designs/Preliminary Cost Estimates for the Lower Blackstone River

The USFWS Engineering Field Office at the request of the State of Rhode Island performed preliminary design of potential upstream and downstream fish passage facilities for the lower four dams on the Blackstone River using low flow tailwater depths obtained by the Corps in 1993 downstream of the four dams and other available information. A written description of what a typical fishway, that is proposed for upstream and downstream fish passage on the Blackstone in Rhode Island, would look like and how it functions is provided by the USFWS in Attachment 1 of this appendix. This attachment also includes specific design information for the four projects by providing sketches showing approximate layouts of the proposed upstream and downstream fishways. The aforementioned fishways were

designed (sized) for passing American shad and river herring; therefore, they will also readily pass Atlantic salmon which possess greater swimming abilitiies.

Preliminary "ballpark" cost estimates for upstream and downstream fishways at the first four dams are provided in the following table based on information provided by the USFWS. The upstream estimates are for simple denil fishways with no bypass reach/additional attraction water requirements. The average costs for these upstream fishways are from $15,000 to $20,000 per vertical foot. The number of vertical feet (VF) at each dam is the difference between the spillway elevation (head pool) and tailwater elevation under low to normal flow conditions. Detailed site-specific evaluations at each of these dams are also needed to effectively design downstream fishways and prepare cost estimates. Downstream passage facilities can cost more than upstream, especially at complex hydroelectric facilities. "Routine" design costs have been estimated as 15% of the total cost for each fishway (up and downstream).

TABLE 1

Preliminary Fishway Cost Estimates

Dam	VF	Upstream	Downstream	Design	Total
Main Street	20	$400,000	$150,000	$82,500	$632,500
Slater Mill	10	$200,000	$50,000	$37,500	$287,500
Eliz. Webbing	15	$300,000	$100,000	$60,000	$460,000
Valley Falls	10	$200,000	$200,000	$60,000	$460,000
Totals		$1,100,000	$500,000	$240,000	$1,840,000

Future Population Estimates Based on Potential Habitat Above Each Dam in Rhode Island

Potential habitat estimates in acreage for alewife and blueblack herring above each dam in Rhode Island were determined by RIDFWER fisheries biologists through aerial photo-interpretation and the use of a planimeter (Erkan 1994). Given the habitat acreage, potential population sizes were predicted for alewife and blueback herring populations (combined) on the Blackstone River following the methodology described by Gibson (1984). These estimates are provided in Table 2. The predictions assume an unimpeded route to the respective spawning areas (i.e. 100% fish passage above dams/fish ladders). However, a 5-10% mortality due to energy expenditure in fish ladder passage at each dam is considered reasonable. The significance of habitat acreage becomes obvious when considering the potential net population increases upstream of Valley Falls and Manville dams as illustrated in Table 2.

A potential population of approximately 110,000 river herring is predicted based upon potential habitat acreage if fish passage facilities are constructed and operated on the first four dams (i.e. Phase I). The predicted alewife/blueback herring population approaches 250,000 if fish passage facilities are constructed and operated at all ten dams on the Blackstone River in Rhode Island.

Currently the RIDFWER has no method to estimate American shad populations albeit they are attempting to develop a model using CFS average flows on known shad runs (Erkan

1994). Alternatively, RIDFWER may use potential adult American shad production estimate methodolgy being developed by the Connecticut Marine Fisheries Division for their plan for the restoration of anadromous fish to the Thames River Basin (Gephard 1994) or those being used in anadromous fish restoration plans in other New England States. For example, Maine estimated potential shad populations in the Kennebec River based on the production of 2.3 shad per 100 square yards of water surface acreage (MEDMR 1986). Using this approach, potential populations of approximately 12,000 and 51,000 American shad could be produced if fish passage facilities are constructed and operated on the first four dams and all ten dams in Rhode Island, respectively.

Potential Impacts and Environmental Mitigation at Hydroelectric Projects

There are presently six hydropower dams under FERC jurisdiction on the Blackstone River including three of the first four dams in Rhode Island.

The purpose of environmental mitigation requirements at hydroelectric projects is to avoid or minimize the adverse effects of development and/or operation. Adverse impacts include but are not limited to upstream and downstream fish passage, instream flows, and water quality (specifically, dissolved oxygen (DO)). Hydropower mitigation usually involves costs, such as reduced profits to owners and/or developers and reduced energy production.

The restoration of anadromous fish to the Blackstone River will require facilities for upstream fish passage at dams. The costs of upstream fish passage mitigation are relatively easy to determine (USDOE 1991). In addition to the capitol costs of constructing the fishway (ballpark cost estimates for the first four dams previously provided), there are operation and maintenance costs (e.g. for clearing debris from the fish ladder or fish lift/elevator and for electrical power to operate a fish lift/elevator), lost power generation resulting from flow releases needed to operate a fish ladder or fish lift/elevator (including attraction flows), and any monitoring and reporting costs.

A variety of screening devices are employed to prevent fish that are moving downstream from being drawn into turbine intakes (USDOE 1991). The simplest downstream passage technique is the use of spill flows similar to those used to increase DO concentrations or provide instream flows. Fish are naturally transported below the hydropower project in these nonpower water releases. Techniques that incorporate more

sophisticated technology are under development, but are not widely used. For example, light- or sound-based guidance measures are being studied as ways to pass migrating fish downstream with a minimal loss for power generation.

A number of measures, some used in combination, are employed to reduce entrainment of downstream-migrating fish in turbines. The most common downstream fish passage device is the angled bar rack, in which the trash rack is set at an angle to the intake flow and the bars may be closely spaced (approximately 2 cm) (USDOE 1991). This device is commonly used in the Northeast. Other frequently used fish screens range from variations of conventional trash racks (e.g., use of closely spaced bars) to more novel designs employing cylindrical, wedge-wire intake screens. Intake screens usually have a maximum approach velocity requirement and a sluiceway or some other type of bypass is employed as well.

In addition to the capitol costs of constructing a downstream fish passage facility (ballpark cost estimates for the first four dams previously provided), costs typically include those for cleaning closely spaced screens or maintaining traveling screens, lost power generation resulting from flow releases needed to operate sluiceways or other bypasses, and monitoring and reporting.

The potential strategies to mitigate for the aforementioned adverse environmental impacts of the lower four dams (i.e. primarily up- and downstream fish passage) will require additional detailed site-specific evaluation, study and design.

Ongoing Studies and Investigations

The Blackstone River Anadromous Fish Restoration Task Force, established by RIDEM's Division of Fish, Wildlife, and Estuarine Resouces (RIDFWER) in early 1993, has been meeting approximately semi-annually to discuss the issues associated with the restoration efforts. The primary mission of the task force is to consolidate and coordinate the individual efforts of various state, federal, and local organizations that are interested in the restoration and management of fish populations in the Blackstone River. The task force has open-ended membership and currently includes representation from a variety of interests including the Massachusetts Division of Fisheries and Wildlife. Since the primary objective to achieving the restoration goal is to remove the impediments to anadromous fish migrations

by providing upstream and downstream fish passage, future meetings will involve the dam owners, especially the hydroelectric facility operators who will ultimately be required by FERC to pay for these facilities under the conditions imposed in their present license and/or exemptions.

In the spring of 1993, RIDFWER released approximately 3,000 adult blueback herring just below Albion Dam, between Cumberland and Lincoln. These fish were obtained from the Charles River via a cooperative effort with the Massachusetts Division of Marine Fisheries and transported in a 1,000 gallon fiberglass tank equipped with aeration devices. Juvenile blueback herring, representing viable natural reproduction by the stocked adults, were recovered in August 1993 above the Valley Falls Dam (Erkan 1993). A school of juvenile bluebacks were observed immediately upstream of the Valley Falls Dam and nine were subsequently captured using their 16-foot electrofishing boat. The captured fish ranged in size from approximately 2 1/2 to 3 1/4 inches (60-82 millimeters), and appeared to be in excellent condition (health). These efforts indicate that the river has a high anadromous fish restoration potential.

Restore Anadromous Fish - Steps

The objective of restoring anadromous fisheries to the Blackstone River can be achieved by either removing dams, or by providing upstream and downstream migratory fish passage facilities at dams, and by reintroducing migratory fishes to the river's historical spawning and nursery habitat areas. The feasibility and cost-effectiveness of removing dams should be evaluated as part of the selection of a comprehensive plan. Restoration efforts should be conducted in a phased approach, with Phase 1 involving the establishment of fish passage at the lower four dams in order that the target species (i.e. American shad and river herring) be able to reach the significant Valley Falls Pond/Marsh spawning and nursery habitat. Non-targeted fish species (e.g. rainbow smelt, sea-run brown trout, striped bass and sturgeon) are also expected to use these facilities. Below the Valley Falls Dam there is only limited spawning and nursery habitat. Future phases of the restoration efforts should also be based upon habitat areas.

An active Strategic Anadromous Fish Restoration Plan (SAFRP) is required by the Federal Energy Regulatory Commission (FERC) before they will require hydropower facility owners to provide for fish passage facilities, even if the right of the Federal government to

require these facilities is already stipulated in the FERC license and/or exemption, as it is for the three of the lower four dams (Phase I) under FERC jurisdiction. The purpose of the SAFRP is to demonstrate that restoration of the anadromous fishery resource is feasible and realistic. The states, Federal government, or other organizations will need to find programs and funds to implement fish passage facilities at non-FERC dams. Both Rhode Island's DFWER and the MADFW support the goal of restoring anadromous fish to the Blackstone River.

Specific steps to restoring anadromous fisheries are as follows:

1. **Form a task force to coordinate the individual efforts of various state, federal, and local organizations interested in the restoration of anadromous fish to the Blackstone River.** Dam owners/hydropower operators should be included in the task force. DFWER has taken the lead on this (see "Ongoing Studies and Investigations" section of this report) for now. Involvement of the state of Massachusetts is important to this effort and will become critical after Phase I of the restoration effort is completed.

2. **Determine potential spawning, nursery habitat and forage areas.** Some of this information has been developed for this report (see Appendices) for the Rhode Island segments, but should be done also for Massachusetts segments in order to assess potential basinwide habitat.

3. **Predict future populations of shad and herring based on estimated habitat acreage.** Some of this information has been developed for this report (see Appendices) for the Rhode Island segments. This should also be done for Massachusetts segments, so that the ultimate potential populations for the river can be determined.

4. **Insure that river segments have sufficient flow at all times, particularly downstream of hydropower facilities.** This may require extensive coordination with FERC.

5. **Determine if all river segments have sufficient water quality for each life history stage of the anadromous fish.**

6. **Implement an active interim trap-and-truck stocking program for shad and herring to reintroduce the fish to the habitat above the dams.** A trap-and-truck program is critical to facilitate the documentation of spawning viability and potential production estimates. In addition, the young fish (juveniles) will become "imprinted" on the habitat and will return to spawn there when fish passage is provided or dams are removed. RIDFWER has performed limited trapping and trucking in the lower reaches of the Blackstone River. MADFW could potentially supply American shad from the Connecticut River at Holyoke for the trap-and-truck program.

7. **Develop and implement a Blackstone River Basin Strategic Anadromous Fish Restoration Plan (SAFRP).** The approved SAFRP should describe the task force's goals, document habitat areas and future populations, and document the viability of the fish as demonstrated in the interim trap-and-truck stocking program. The SAFRP should include an anadromous fish passage operational plan with sequential target dates for upstream and downstream passage for all dams based on "trigger numbers" for specific species returning to the base of each dam or passed at dams with fish passage facilities.

8. **Obtain tailwater depths downstream of dams under average flow conditions.** This step is necessary to perform preliminary fish passage designs. The Corps of Engineers installed staff gages and obtained tailwater depths at the lower four dams.

9. **Perform preliminary fish passage designs.** USFWS has performed preliminary design of fish passage facilities for upstream migration for the lower four dams. They have not yet preliminarily designed downstream fish passage facilities due to the far more extensive effort and data gathering required for three of the lower four dams: the three dams with hydropower facilities.

10. **Coordinate with the appropriate State Historic Preservation Office.** This is necessary to identify concerns, particularly for structures registered as Historic Structures, relative to the dam's appearance or historical integrity as a result of the proposed fish passage facilities/modifications. Although the Historic Preservation Offices are likely to support the goal of restoring historic anadromous fisheries, they are likely to have significant concerns at the dams.

11. **Petition FERC to require fish passage facilities and any other appropriate project modifications at hydropower dams under its jurisdiction.** This step should be performed by the states, in conjunction with the US Fish and Wildlife Service (USFWS). Recent legislation requires FERC to give equal consideration to both power generation and fish passage.

12. **Determine the impact of the fish passage facilities on hydropower operations and the reciprocal impact of the operation of the turbines on fish passage.** This step will require the cooperation of USFWS and the hydropower owners.

13. **Perform final fish passage design and cost estimates.** Approximate cost of Denil-type fishways, used by fish for upstream passage, are $15,000 to $20,000 for each vertical foot (difference between dam spillway and tailwater elevations). There are no rules-of-thumb for downstream fish passage costs as they are highly site-specific. Costs will likely be significantly impacted by any historic National Register status or canoe/boat portage that may be included.

14. **Construct fish passage facilities at the lower four dams (Phase I).**

15. **Manage restored fish stocks to protect the newly-introduced fishes until a self-sustaining population has been established.** This may include recreational or commercial harvest restrictions.

16. **Establish a high level of involvement by the Massachusetts Division of Fisheries and Wildlife (MADFW) once Phase 1 is successfully completed.** The MADFW has expressed an interest in extensive involvement at that time (personal communication, Mark Tisa, Ph.D., Assistant Director, Fisheries, 19 April 1994).

17. **Re-introduce anadromous fish populations to stocking areas farther upstream (per the SAFRP) in order to document the viability of the fish in those areas.**

18. **Evaluate the effectiveness of the fish passage facilities to assure the cost effectiveness of future efforts.**

19. **Document progress in reaching the SAFRP production goals.** An annual report should be prepared.

20. **Review FERC permits to insure incorporation of fish passage requirements in future licenses and/or exemptions.**

21. **Develop and implement a public support and involvement program to insure the long-term success of the anadromous fish restoration program.**

22. **Identify research needs/conduct needed studies on matters such as the evaluation of potential shad and river herring habitat in Massachusetts or the potential Atlantic salmon habitat in the Blackstone River watershed.** Studies and associated costs should be identified early in the process to assure that the studies receive funding.

References Cited

Bergin, J. 1974. Blackstone River Drainage Coldwater Fisheries Investigations, Survey and Inventory of Streams. Massachusetts Division of Fisheries and Game, Bureau of Wildlife Research and Management.

Borden, D. 1993. Letter from David V.D. Borden, Acting Chief, Rhode Island Department of Environmental Management, Division of Fish and Wildlife, Wakefield, RI to William Hubbard, Chief, Environmental Resources Branch, USACE, New England Division, Waltham, MA, 29 January 1993.

Blackstone River Valley National Heritage Corridor Commission (BRVNHCC). 1993. Cultural and Land Management Plan for the Blackstone River Valley National Heritage Corridor.

Chesapeake Bay Program (CBP). 1989. Chesapeake Bay Alosid Management Plan, An Agreement Committment Report from the Chesapeake Executive Council, Annapolis, MD.

Demaine, A.W. and R.C. Guthrie. 1979. Blackstone River Watershed Stream Survey, Fisheries Report No. 4. Rhode Island Division of Fish and Wildlife.

Desbonnet, A. and V. Lee. 1991. Historical Trends: Water Quality and Fisheries, Narragansett Bay. The University of Rhode Island Coastal Resources Center Contribution No. 100 and National Sea Grant Publication #RIU-T-91-001. Graduate School of Oceanography, Narragansett, RI. 101 pp.

Ecology and Environment, Inc. (EEI) 1987. Biological Survey of the Blackstone River, Woonsocket, Rhode Island: Preliminary Results. Prepared for Ocean State Power, Boston, MA by EEI, Buffalo, NY.

Erkan, D. 1993. Rhode Island Department of Environmental Management, Division of Fish, Wildlife, and Estuarine Resources (RIDFWER) Interoffice Memo from Dennis Erkan, Senior Fisheries Biologist, to John O'Brien, Deputy Chief of Freshwater and Anadromous Fisheries, RE: Blackstone River Anadromous Fish Restoration Efforts, 30 August 1993.

Erkan, D. 1994. Letter from Dennis Erkan, Senior Fisheries Biologist, RIDFWER, West Kingston, RI to Robert W. Davis, Environmental Biologist, Environmental Resources Branch, USACE, New England Division, Waltham, MA, 25 January 1994.

Fay, C.W., R.J. Neves, and G.B. Pardue. 1983. Species Profiles: Life Histories and Environmental Requirements of Coastal Fishes and Invertebrates (Mid-Atlantic) - Alewife/Blueback Herring. U.S. Fish and Wildlife Service, Division of Biological Services, FWS/OBS-82/11.9. U.S. Army Corps of Engineers, TR EL-82-4. 25pp.

Gephard, S.R. 1994. Letter with Attachments from Stephen R. Gephard, Senior Fisheries Biologist, Connecticut Department of Environmental Protection, Bureau of Natural Resources, Marine Fisheries Division, Old Lyme, CT to Robert W. Davis, Environmental Biologist, Environmental Resources Branch, USACE, New England Division, Waltham, MA, 10 June 1994.

Gibson, M.R. 1984. On the Relationship Between Stock Size and Production Area in Anadromous Alewives. Rhode Island Department of Environmental Management, Division of Fish and Wildlife, Research Reference Document 84/2. 10pp.

Goode, G.B. 1887. The Fisheries and Fishery Industry of the United States. U.S. Dept. of the Interior, Com. Fish and Fisheries, Washington, DC.

Gray, C.L. 1992. Alewife (Alosa pseudoharengus) Species Profile. Rhode Island Department of Environmental Management, Division of Fish & Wildlife, Marine Fisheries Section. Jointly Funded by the Narragansett Bay Project (NBP) and National Marine Fisheries Service. NBP-92-79.

Johnson, A.S., L.E. Kennedy and R.M. Nuzzo. 1992. A Report on Biological Conditions in the Blackstone River and Selected Tributaries - Results of the 1985 Biomonitoring Survey. Massachusetts Department of Environmental Protection, Division of Water Pollution Control, Technical Services Section, North Grafton, MA.

Kendall, W.C. 1935. The Fishes of New England. The Salmon Family. Part 2, The Salmons. Memoirs of the boston Society of Natural History. Vol. 9, No. 1, 166 pp.

Klauda, R.J., S.A. Fischer, L.W. Hall, Jr. and J.A. Sullivan. 1991. American Shad and Hickory Shad, Alosa sapidissima and Alsoa mediocris. In Habitat Requirements for Chesapeake Bay Living Resources, Second Edition. Prepared for Living Resources Subcommittee, Chesapeake Bay Program by Habitat Objectives Workgroup, Living Resources Subcommittee, Chesapeake Research Consortium, Inc., Solomon, MD. Pages 9-1 to 9-27.

Klauda, R.J., S.A. Fischer, L.W. Hall, Jr. and J.A. Sullivan. 1991. Alewife and Blueback Herring, Alosa pseudoharengus and Alosa aestivalis. In Habitat Requirements for Chesapeake Bay Living Resources, Second Edition. Prepared for Living Resources Subcommittee, Chesapeake Bay Program by Habitat Objectives Workgroup, Living Resources Subcommittee, Chesapeake Research Consortium, Inc., Solomon, MD. Pages 10-1 to 10-29.

Loesch, J.G. 1987. Overview of Life History Aspects of Anadromous Alewife and Blueback Herring in Freshwater Habitats. American Fisheries Society Symposium 1:89-103.

MacCrimmon, H.R., and D.L. Gots. 1979. World Distribution of Atlantic Salmon, Salmo salar. J. Fish. Res. Board Can. 35:422-457.

McGinn, J.M. 1981. A Sediment Control Plan fot the Blackstone River. Massachusetts Department of Environmental Quality Engineering, Office of Planning and Program Management.

Maine Department of Marine Resources (MEDMR). 1986. Strategic Plan and Operational Plan for the Restoration of Shad and Alewives to the Kennebec River Above Augusta. Prepared by Thomas S. Squiers, Jr. and Malcolm Smith, MEDMR.

O'Brien, J. 1993. Minutes of the First Meeting of the Blackstone River Anadromous Fish Restoration Task Force, 1 April 1993. Prepared by Chris Powell, RIDFWER, 21 April 1993.

U.S. Department of Energy (USDOE). 1991. Environmental Mitigation at Hydroelectric Projects, Volume 1. Current Practices for Instream Flow Needs, Dissolved Oxygen, and Fish Passage. Prepared for the U.S. Department of Energy, Idaho Field Office by Oak Ridge National Laboratory, Martin Marietta Energy Systems, Inc., Oak Ridge, TN and Idaho National Engineering Laboratory, EG&G Idaho, Inc., Idaho Falls, ID.

U.S. Environmental Protection Agency (USEPA). 1991. Blackstone River Initiative Phase 1: Dry Weather Assessment Interim Report of Data 1991. Prepared by: The U.S. EPA Region 1 and the Massachusetts Division of Water Pollution Control in cooperation with the Rhode Island Department of Environmental Management and The University of Rhode Island.

U.S. Fish and Wildlife Service (USFWS). 1989. Final Environmental Impact Statement 1989-2021: Atlantic Salmaon Restoration in New England. Prepared by U.S. Fish and Wildlife Service, Region 5, Newton Corner, Massachusetts.

Weiss-Glanz, L.S., J.G. Stanley, and J.R. Moring. 1986. Species Profiles: Life Histories and Environmental Requirements of Coastal Fishes and Invertebrates (North Atlantic) - American shad. U.S. Fish Wildf. Serv. Biol. Rep. 82(11.59). U.S. Army Corps of Engineers, TR EL-82-4. 16pp.

BLACKSTONE RIVER ANADROMOUS FISHERIES HABITAT ACREAGE AND POPULATION PREDICTIONS

DAM NUMBER AND NAME	HABITAT ACREAGE TO NEXT DAM	CUMULATIVE HABITAT ACREAGE	PREDICTED ALEWIFE/BLUEBACK POPULATION SIZE	NET POPULATION INCREASE ABOVE EACH DAM
1) Main Street	1.18	1.18	3,720	3,720
2) Slater Mill	13.67	14.85	22,066	18,346
3) Webbing Mills	23.79	38.64	43,220	21,154
4) Valley Falls	109.08	147.72	139,995 (110,947)[1]	96,775 (67,726)[1]
5) Pratt (passable)	57.92	205.64	139,995	29,048
6) Ashton	35.28	240.92	156,479	16,484
7) Albion	39.69	280.61	177,230	20,751
8) Manville	103.65	384.26	217,265	40,035
9) Woonsocket Falls	42.92	427.18	234,055	16,790
10) Bridge Street	33.22	460.40	246,708	12,653

Population estimates adapted from Gibson, 1984. $P = 3311.3(A^{.703})$, where A = total habitat acreage and P = total population size.

1-The figures in parentheses are predictions of potential population size and net increase respectively, upstream of Valley Falls Dam if Pratt Dam were not passable.

U.S. FISH & WILDLIFE SERVICE
ENGINEERING FIELD OFFICE
DEPARTMENT OF THE INTERIOR
SUITE 612, ONE GATEWAY CENTER
NEWTON CORNER, MA 02158

January 14, 1994

Mr William Mullen
New England Division
U. S. Army Corps of Engineers
Planning Division
424 Trapelo Road
Waltham MA 02254

Dear Mr Mullen:

The purpose of this letter is to provide your office with a written description of what a typical fishway that is proposed for fish passage on the Blackstone River in Rhode Island, currently being investigated under your Section 22 program, would look like and how it would functions. You verbally requested this information from me on December 13, 1993. We provided specific design information for the 4 projects at the recent meeting (October 26, 1993) of the Blackstone River Restoration Task Force, and a copy of our sketches showing approximate layouts was previously furnished. It is my understanding that this information will be provided to the local Historic Committees as well as the Conservation Commissions as an overview for their use since their members may not know what a fishway is. This generic information may not be fully applicable to all the projects currently under consideration for the Blackstone River.

GENERAL - The upstream fishway would consist of a 4 foot wide Denil fishway with a 1 on 8 floor slope. I have enclosed several figures showing the various components described below. A "Denil" fishway has 2 vertical walls, usually constructed out of 10" to 12" thick reinforced concrete, and a concrete floor slab. The reinforced concrete slab can range from 15" thick to greater than 24" depending upon design loads and codes. The distance between the walls for all 4 Blackstone River projects would be 4'. The projected height of the walls is 6' from the floor slab to the top of concrete. At the entrance channel, the section of the fishway where the upstream migrating anadromous fish enter and the water exits, the walls will probably be several feet higher due to greater tailwater depths. Beginning at the upstream end of the entrance channel is a sloped floor section containing the Denil baffles. The floor slope is 1 on 8 and is described in more detail under the Denil Baffle Section. Because of site conditions and difference in elevation between headwater and tailwater, there is an intermediate turning pool (or a resting pool), then a second (or third) Denil baffle leg or segment. An exit channel, where the water enters the

fishway and where the fish exit, connects the head pond (or the water surface upstream of the dam) to the uppermost section of the Denil baffles. An overall view of what a typical Denil fishway looks like in plan view and section view is shown on figure 1.

ENTRANCE CHANNEL - The fishway entrance channel always has a level floor slab. The entrance channel must be located as close to the base of the dam as is possible. It is designed so that at minimum operating flows (see later discussion on design flows) there is 2 feet between the water surface and the slab. This usually requires some ledge or concrete excavation and/or dredging to get to the necessary design depth. For non hydropower locations, the entrance channel is normally placed at a 45° angle towards the flow coming over the dam. This is necessary so that the upstream migrating fish swimming up along the opposite bank have a much better chance of finding the fishway entrance without experiencing a significant time delay. A channel may have to be dredged or excavated leading from the fishway entrance. The total length of the channel would be about 20', the average width would be about 2', and the depth is usually tapered down to a maximum of 2'. Since the upstream migrating fish are trying to find a spawning site and their movements are governed by temperature changes in the water, it is critical to design the fishways so that there is no significant time delay for the fish to get past the barrier. The fishway is designed so that the attraction jet coming out of its entrance is stronger than any other flow vectors nearby and located such that the upstream migrating fish (as well as resident fish) can find the entrance easily. See figure 2 for a typical entrance channel to a Denil fishway. As can be seen from this figure, there is a 135° turn inside the entrance channel. The lengths of the turn pools are a function of the overall width of the fishway. For a 4' wide Denil, these turn pools must be 10' to 12' long. Stop log slots are always provided near the downstream face of the entrance channel.

DENIL BAFFLE SECTION - At the upstream end of the entrance channel, the Denil baffle section begins. The concrete floor slab now is sloped. The floor slope depends upon the target fish. Typical floor slopes range from a 1' vertical rise for every 5' of length (called a 1 on 5) where the target fish are strong swimmers such as trout or salmon down to a 1 on 8 for relatively weak swimming fish such as American shad (which is one of the target fish for this study).

The Denil baffles are usually made out of normally sized 2" thick wood available at any lumber yard. A detail of a baffle that would be used in one of the fishways proposed for the Blackstone River is shown on figure 3. All dimensions and spacing of the Denil baffle are also a function of the width of the Denil fishway. For the 4' wide Denil, the clear opening between the sides of the baffle is 2'-4". The baffles are placed every 30" beginning at the start of the floor slope at the upstream end of the entrance channel. The baffles make a 45° angle to the floor slab as measured on the upstream face. The overall height of the baffles is 1 foot greater than the wall height, or in our case, 7'. Near the entrance channel, some of the lower baffles will be higher. Near the bottom of the Denil baffle opening there is a V notch. Again, sizing is dependant upon overall width. For our case, the bottom of the notch is 12" above

the bottom of the baffle, and the top of the notch is 24". A wood strut (usually a 2"x 6") ties the baffle together at both the top and at the bottom. The top strut is designed so that it will never be in the normal water column. The Denil baffle functions as an energy dissipator. The upstream migrating fish do not rest inside the sloped Denil sections of the fishway.

Our design standards allow for 6 to 9 feet of vertical rise before the next level floor section which is either a turning pool or a resting pool. At this level section there are no Denil baffles. Fish may rest in these sections for several minutes before moving upstream again. Once again, the length of these pools is a function of the overall width of the fishway. As stated above, this is between 10 to 12 feet for a turning pool or 12 to 16 feet for a resting pool.

A second Denil section (sometimes more) is usually required. The total length of the sloped sections are a function of the difference in elevation between the headwater levels above the barrier and the tailwater levels. A typical layout of Denil fishway is shown on figure 1. For most designs, the most economical layout has the lowermost Denil leg going in a downstream direction from the dam, a turning pool where there is a 180° turn and a second Denil section now going in an upstream direction. Some of the Denil fishways in Maine are over 50' high, although most are in the 6' to 14' high range.

EXIT CHANNEL - The uppermost Denil section terminates at the level exit channel where normally the fishway is cut through the existing dam. The exit channel is shown on figure 2. The width of the fishway at this point remains 4' wide. The invert elevation of the slab is similar in design aspects to the entrance channel. It is designed to be either 2' below the minimum headwater operating level or 30" below the normal water surface in the headpool. The concrete walls of the exit channel usually extend to a height at least 2' above the crest of the dam. A trash rack to prevent large sized debris from passing down the fishway is required at the upstream end of the fishway, as is an additional set of stoplog slots. This set of stoplog slots is usually used to shut the fishway down during the fall and winter. It is not used to regulate flows going down the fishway. A floating log boom is also a desired feature of a exit channel configuration. The boom helps keep all floating debris out of the fishway.

NON OVERFLOW SECTION AND DOWNSTREAM FISHWAY - Usually adjacent to he exit channel is a section of dam where a low height wall is constructed. This wall, which may be constructed out of timber or concrete, is designed to be slightly greater than the maximum operating level of the fishway. It extends from the river-side of the fishway out to a point approximately 4' to 5' past the fishway entrance channel, and is also shown on figure 2. The purpose of this non-overflow section is to prevent any headwater flow from passing over the dam, passing along the downstream face of the dam, and interfering with the attraction jet coming out of the fishway entrance. This non-overflow section is usually anywhere from 1.5' to 3' high. This non-overflow section does not have any significant effect on flood flows.

Many times a downstream migrant notch is placed in the non-overflow section at the farthest river-side location. The notch is usually from 9" to 18" deep and is usually 3' wide. During the upstream migration period, stoplogs or timbers are placed inside the notch and extended upward to meet the top level of the non-overflow section. During the downstream migration period for the juveniles which usually begins in the later part of summer when stream flows are usually at their historic lowest levels during the year, the boards are taken out of the downstream migrant notch and the river flows are concentrated so that there is a relatively deep cushion of water for the juveniles to pass over the dam in. If the notch is not provided the juveniles are very reluctant to pass over the dam if water depths are less than 6". The increased depth of water provided at the notch also helps protect them against predators. Adults usually come downstream about 3 weeks after passing upstream and usually come down at a time when water depths over the dam are acceptable. We do not advocate using a upstream fishway for downstream passage.

Below the downstream migrant notch must be a plunge pool at least 3' deep for the fish to fall into. It must be free from any debris or rock outcrops which could harm the descending fish. Normal amounts of flow required for a downstream fishway is usually about 20 CFS. Downstream passage at a hydropower plant may be significantly different depending upon site conditions.

DESIGN FLOWS - A fishway is not designed to operate at flood conditions. The migration period and the target fish, those that are expected to use the fishway, are usually established by the State fisheries biologists. The typical migration period in the coastal Rhode Island and Massachusetts area can begin as early as the first week in April and extend to the middle of June depending upon the target fish. Our engineers look at river flow data from nearby U.S.G.S. gaging stations for the upstream migration period, usually the last 10 to 15 years of data, and establish what a normal, minimum and maximum flow would be during this period at the project site. We do not use a 7Q10 or a 10 year flood for example. We would expect that the design flows we arrived at would be exceeded for some small time period. During very high flow events, upstream migrating fish would tend to hold up in a low velocity section of the river until the flow event recedes. At some point however, they must resume their upstream migration. At low flows, the water temperatures usually warm up fairly rapidly. This usually signals an end to the upstream movement of the anadromous fish. A typical maximum design flow would be two to three times the average April flow at the project site. We almost always require that a tailwater staff gage be installed near the proposed location of the fishway entrance and routinely read over a given period of time so that the entrance channel can be properly designed. A tailwater rating curve would be developed from this recorded data. These staff gages have been installed on the Blackstone River projects and will be used to set the elevations of the entrance channels.

FISHWAY FLOWS - The design flows through the Denil fishway are once again primarily a function of the width of the Denil fishway. The normal flows through a 4' wide Denil (30" of water at the exit channel and turning pools) is 10.5 cubic feet

of water per second (CFS). At low flows (24" at the exit channel) there is only 4.5 CFS passing through the fishway. The volume of water passing through the Denil appears to be much greater. It is almost always a concern of local interest groups and residents. They feel that by installing a Denil fishway, the water behind the dam will dry up or levels significantly decreased. In some instances, the volume of flow through the Denil is not enough to compete with the volume of flow passing over the dam or through a hydropower installation. Based upon the minimum releases required at the dams on the Blackstone River, additional attraction water will probably not be necessary at any of these 4 project sites.

I hope this information is of value to you. If you need any additional information, please contact me at your convenience at (617) 244-0837.

Sincerely

Dick Quinn
Hydraulic Engineer

cc: Greg Mannesto ES-RIFO
John O'Brien RI F&WL

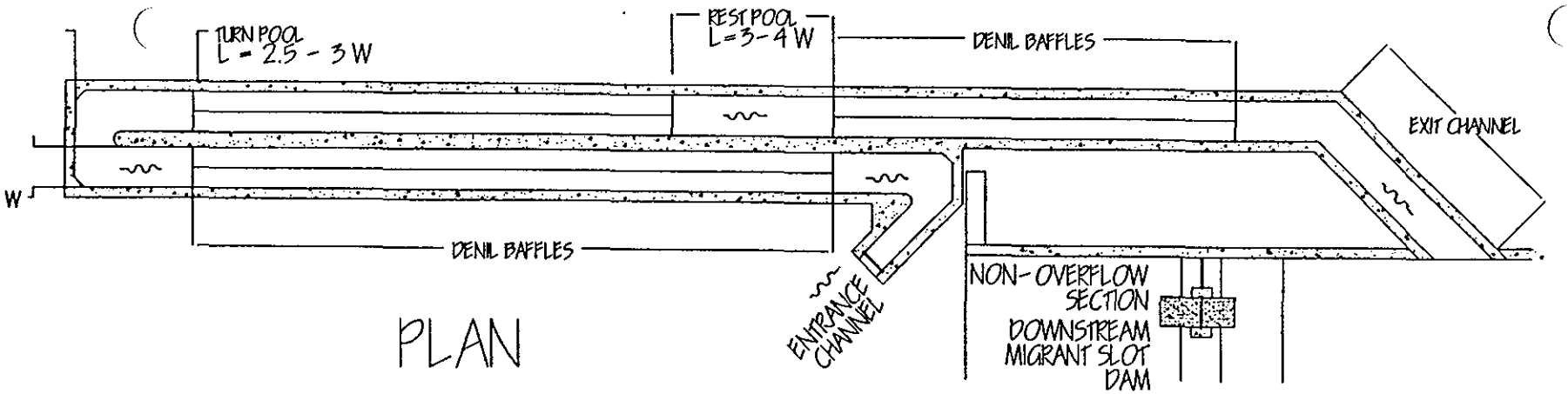

PLAN

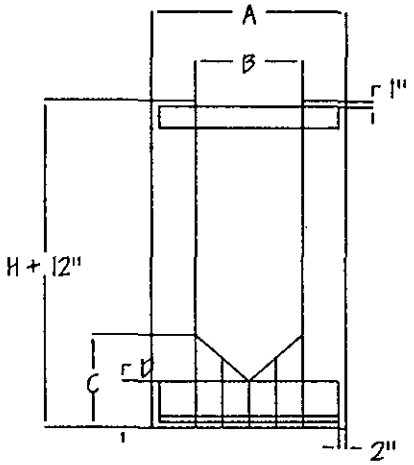

DENIL BAFFLE
(TIMBER)

FISHWAY WIDTH = W
(B = 7/12 W) (S = 2/3 W)

FISHWAY WIDTH W	A	B	C	D	BAFFLE SPACING S
4'-0"	4'-3"	2'-4"	2'-0"	1'-0"	2'-6"
3'-6"	3'-9"	2'-0"	1'-9"	10.5"	2'-4"
3'-0"	3'-3"	1'-9"	1'-6"	9"	2'-0"
2'-6"	2'-9"	1'-5.5"	1'-3"	7.5"	1'-8"
2'-0"	2'-3"	1'-2"	1'-0"	6"	1'-4"
1'-6"	1'-9"	10"	1'-0"	6"	1'-0"

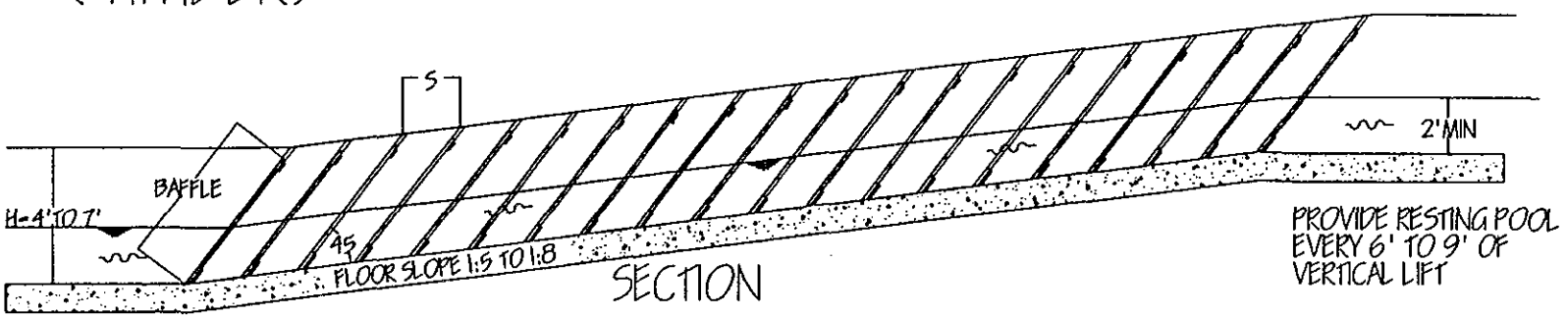

SECTION
DENIL FISHWAY DETAILS

FIGURE 1

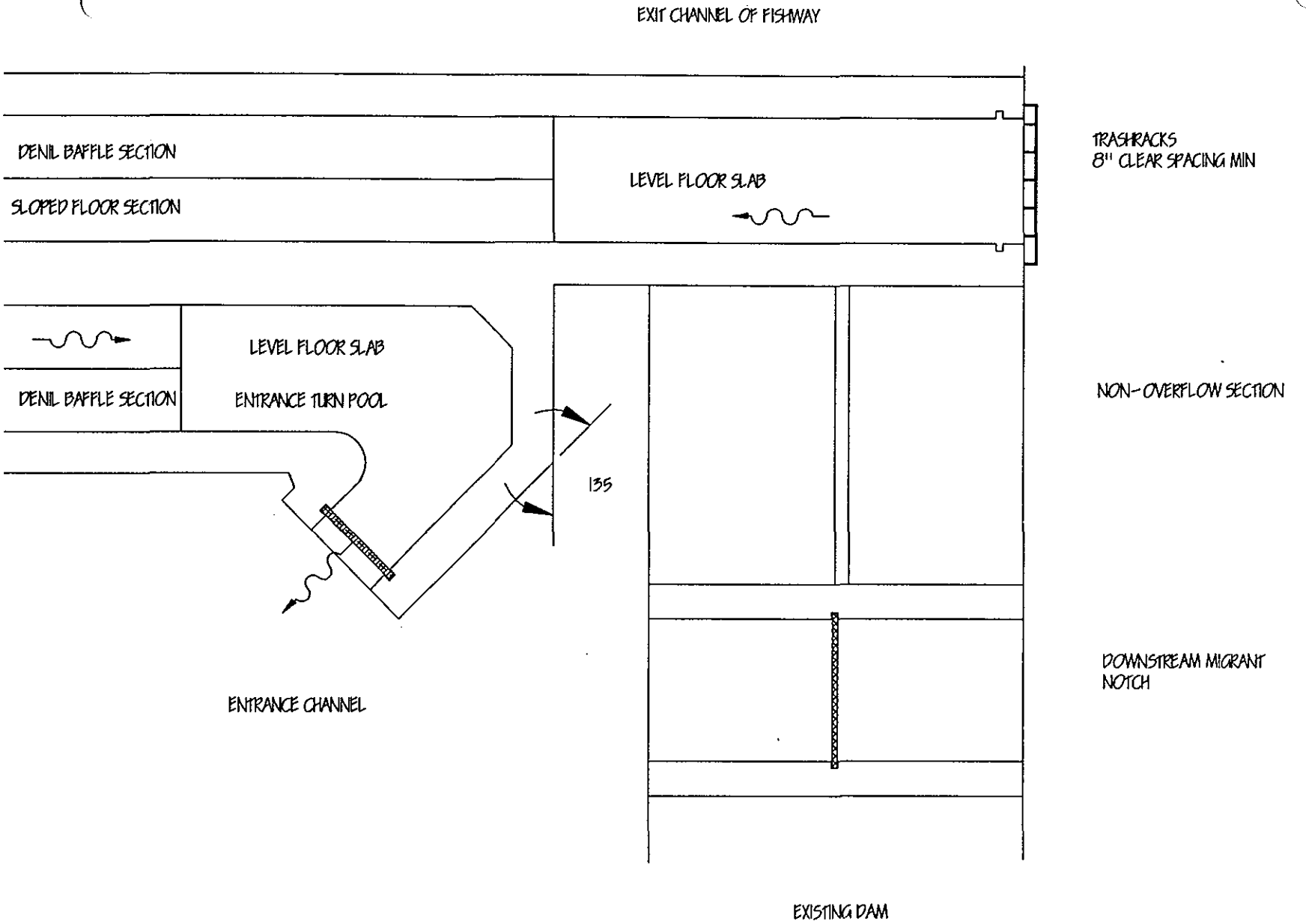

PLAN VIEW

FIGURE 2

1/4

FIGURE 1

MAIN STREET / BLACKSTONE ELECTRIC CO DAM

BLACKSTONE RIVER

80

8/22/93

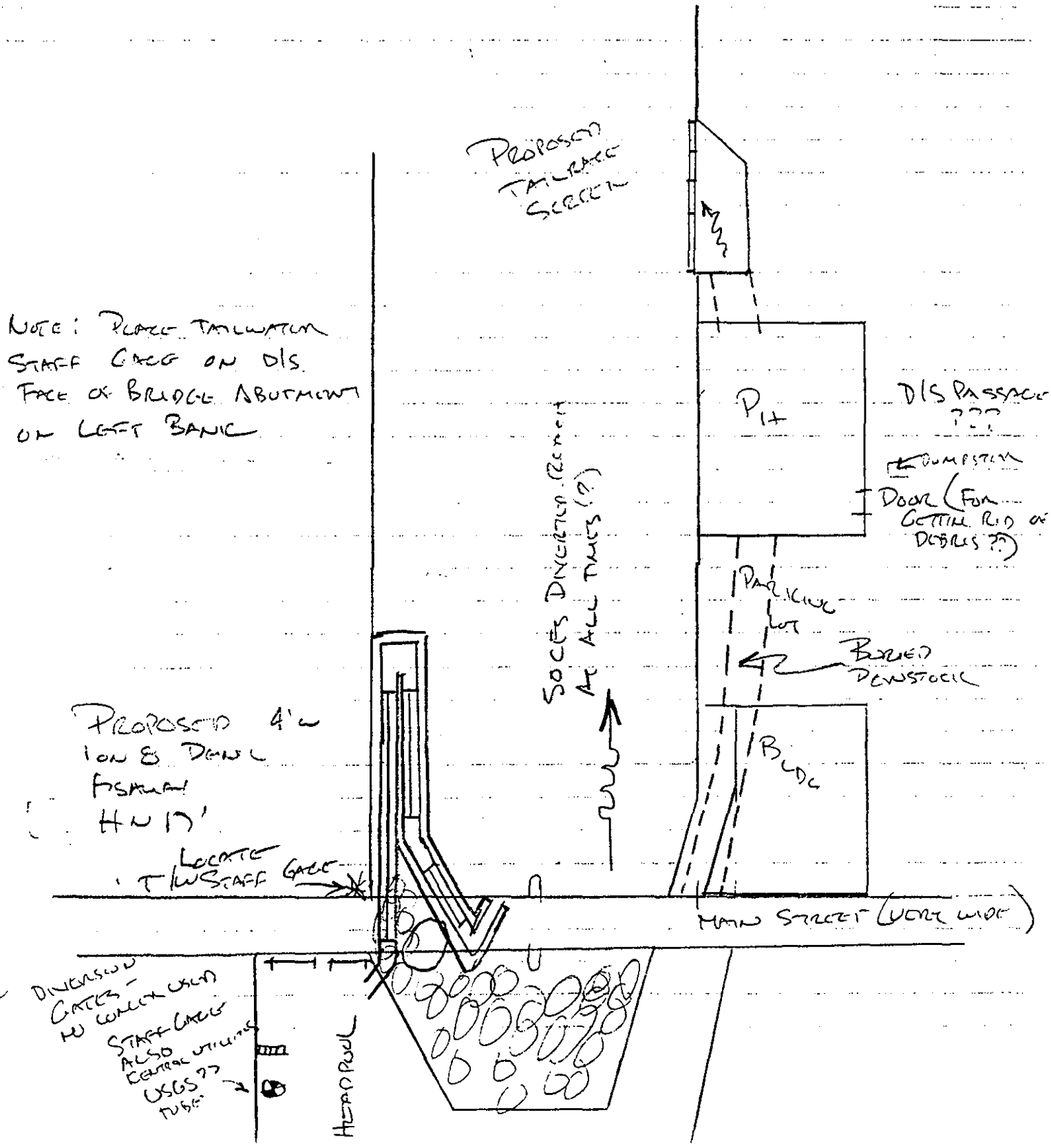

2/4

FIGURE 2
SLATER MILL DAM (NO HYDRO)

8/22/93

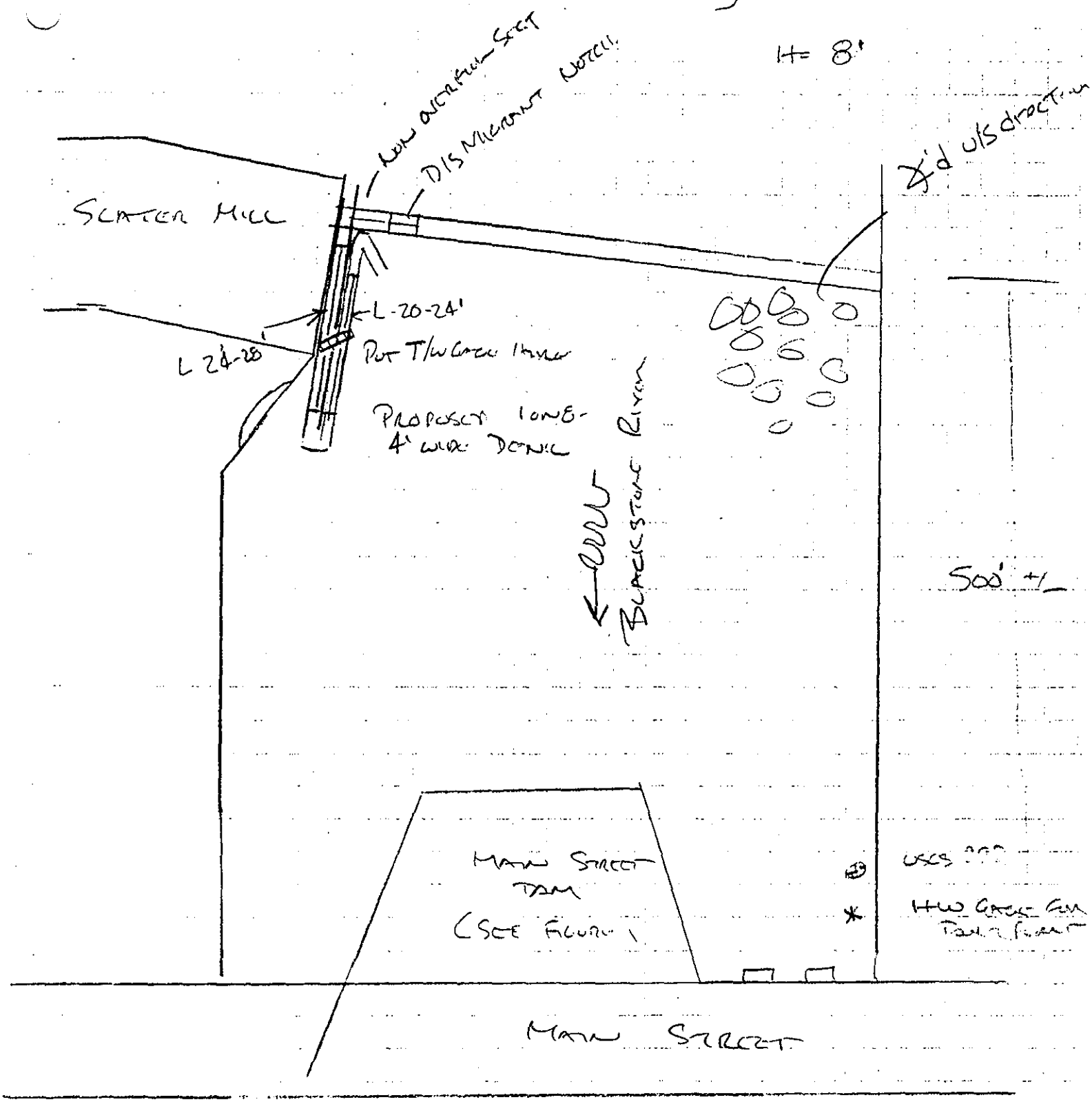

FIGURE 3

ELIZABETH WEBBINK CO DAM

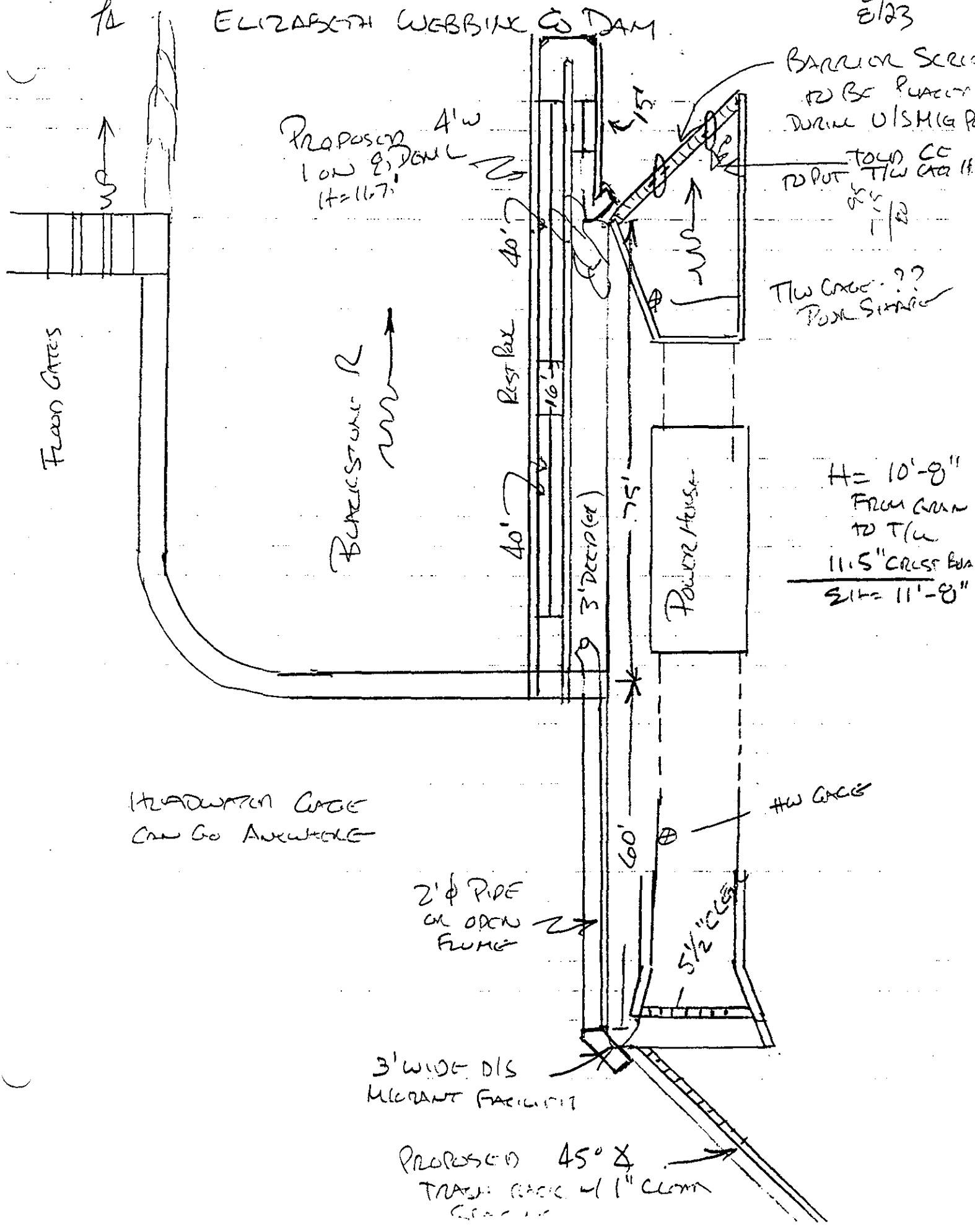

FIGURE 4

4/L GELARDIN/BRUNER/COTT WE

DRL 0/23/93

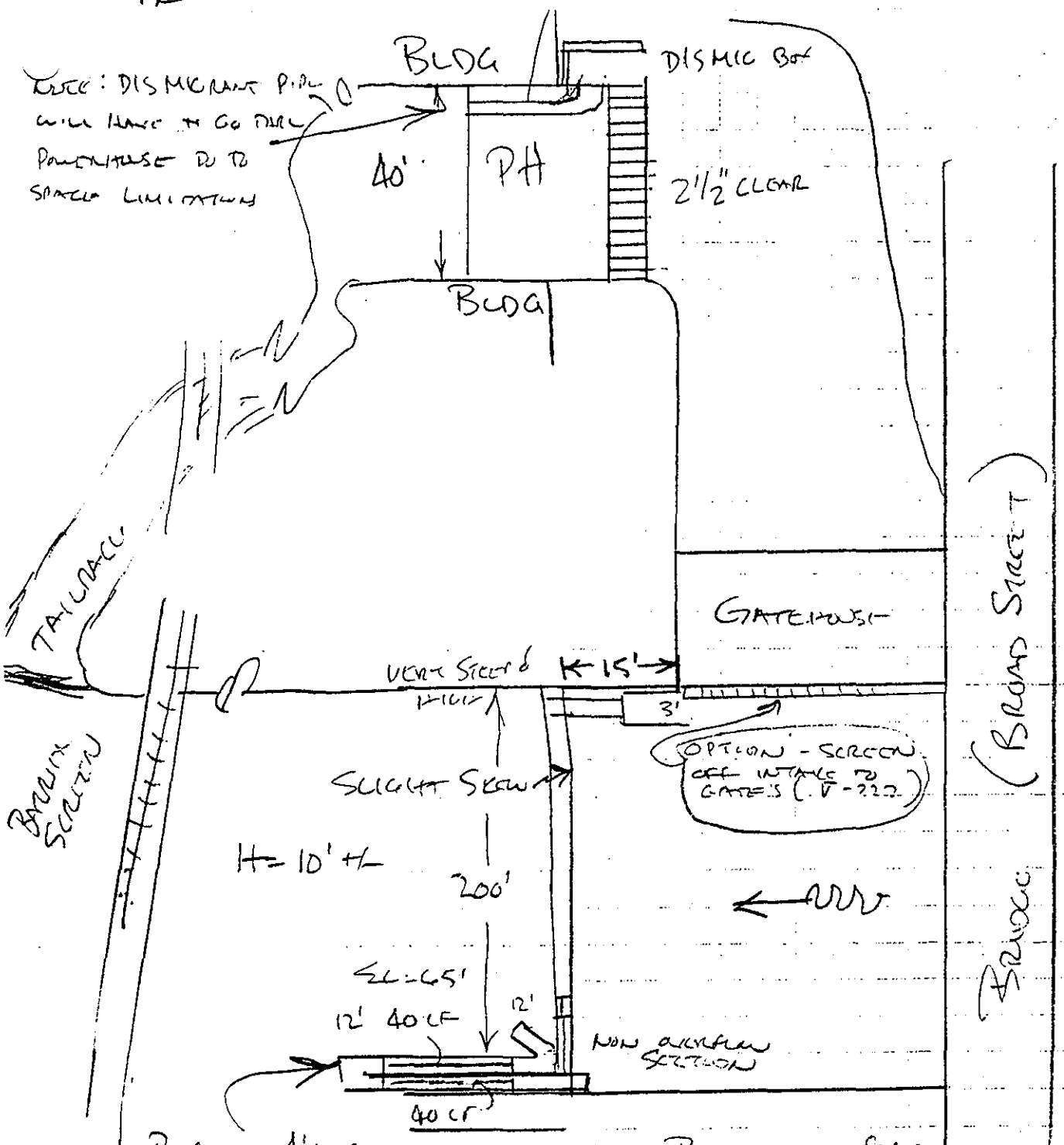

NOTE: BECAUSE OF PARK WOULD BE NICE TO PUT FISHWAY ON LEFT BANK FOR PUBLIC VIEWING ETC

COULD GO ON OTHER SIDE AS WELL BUT LEFT BANK SITE COULD BE MAINTAINED EASILY

Appendix D - Risk Assessment

Appendix D -Risk Assessment

Because many readers of this report are likely to be completely unfamiliar with risk assessment, a brief summary of what it is and what it involves is provided. Human health and ecological risk assessment is defined as a process that evaluates the likelihood that adverse effects to human health or the ecological environment may occur as a result of exposure to one or more contaminants. The basic elements in risk assessment include the processes of hazard identification, dose-response assessment, exposure assessment, and risk characterization. Human health risk assessment has been used by the USEPA and state regulatory agencies since the early 1980's to assess (i.e. quantify) the degree of threat posed by hazardous waste sites to humans, and is the primary means of determining cleanup levels. More recently, there has been a trend by the regulatory agencies to also quantify the risks to the ecological environment through ecological risk assessment.

Hazard identification is the process of showing causality, that is, "does a chemical cause cancer (a carcinogen) or induce some other adverse effect such as reproductive dysfunction or birth defects (a teratogen)?". The answer to this is either yes or no, although there are often uncertainties.

Dose response assessment determines the magnitude of the toxic response. This is usually accomplished experimentally, in the laboratory. Distinctions are made between carcinogens and non-carcinogens.

Exposure assessment determines the magnitude, frequency, and duration of exposure of the chemicals to the human or ecological "target receptor". Various assumptions are made about how the receptor would be exposed (and for how long and how much), and how the receptor would ingest, inhale, or touch the chemical.

Risk characterization integrates the findings of dose response and the assumptions of exposure to produce, at least for human risk assessment, a numerical estimate of the risk from the chemical(s).

After the risks have been assessed, the risks must be managed, typically by controlling the potential for exposure of the chemical(s) to the receptors. Typically, costs, feasibility and political issues surface that complicate the balancing of risks. Because risk

assessment involves so much uncertainty, and because the costs of reducing the risks are often large, the assumptions used in the risk analysis are often criticized. Risk assessment is, however, one of the only tools available for quantifying environmental risks.

Source of this information: U.S. Army Engineer Waterways Experiment Station, "Environmental Effects of Dredging Technical Notes", EEDP-06-15, December 1991.

Appendix E - Cost Estimate for Repairing Fisherville Pond Dam

Appendix E - Cost Estimate for Repairing Fisherville Pond Dam

Tasks specified in the Scope of Work for Fisherville Pond Dam included the performance of a limited site visit by Corps personnel to review the condition of the dam, identification of possible site defects, and the provision of a gross estimate of the cost to repair the dam. The Corps findings are documented as follows:

1. Existing dam safety reports and information specific to Fisherville Pond Dam were compiled. These reports included:

   a. U.S. Army Corps of Engineers, Phase I Dam Safety Inspection Report, MA00577, October 1978.

   b. Massachusetts Department of Environmental Management Inspection/Evaluation Report prepared by Hydraulic and Water Resources, Inc., dam inspected on July 15, 1988.

   c. Letter from Mr. Dennis McDonough, Regional Engineering Supervisor of Ducks Unlimited, Inc. to Mr. Coulten Bridges, May 10, 1989.

   d. B & J Drilling for Howland Engineering, Inc., boring logs of October 17-19, 1990.

   e. Massachusetts Department of Environmental Management Dam Safety Inspection Report (draft), prepared by Pare Engineering Corp., January 1994.

2. A review of the above reports indicated that Fisherville Pond Dam is a privately-owned high hazard earthen dam on the Blackstone River apparently in poor condition.

3. None of the reports included a cost estimate for all of the work needed to restore the dam, however, the draft inspection report prepared by Pare Engineering Corp. (for DEM), provided a list of several engineering recommendations for the dam, as well as corresponding costs. A cost estimate of $354,000 to $433,000 was made for the following tasks:

   a. remove trees, brush, weeds, and establish groundcover

b. repair riprap at upstream slope

c. construct a reverse weighted filter

d. point spillway and repair undermining at training wall

e. replace sluiceway gates and mechanism/repair concrete

f. replace/repair diversion structure gates/repair concrete

g. Operations and Maintenance Manual

h. Emergency Action Plan.

4. Pare Engineering Corp. also recommended a number of non-construction-type activities, and provided an estimate of $50,000 for the performance of these tasks, which included:

a. reinspect the site after the embankment and downstream areas have been cleared

b. set up and undertake a program to monitor the wells at the site and the masonry spillway and training walls

c. install 4 piezometers in the area of suspected seepage and perform a slope stability analysis

d. perform a hydraulic/hydrologic analysis to determine feasible alternatives to increase the spillway capacity, including operational procedures.

5. The Pare Engineering report noted that a previous 1992 cost estimate by the state assessed the construction cost of rebuilding the embankment at $500,000 to $700,000. Pare did not provide its own estimate for rebuilding the embankment, claiming that "the heavy tree cover made it impossible for Pare to determine if that magnitude of repairs is

required...". Subsequent conversations with personnel from the state DEM indicated that the 1992 cost estimate was merely a quick "back of the envelope" calculation of the cost.

6. Because of questions raised concerning the validity of the embankment cost estimate, and in accordance with the Scope of Work, Corps personnel were sent to inspect the embankment to come up with a cost for its restoration; the outlet and spillway were not inspected since it was believed that the Pare Engineering Corp. inspection and cost estimate were adequate for these areas.

7. The attached Memorandum documents the Corps embankment inspection findings, and provides a cost estimate of $120,000 for the restoration of the embankment. It should be noted that this estimate is based upon the assumption that the dam has a minimum of three feet of freeboard at all times. To insure that this freeboard is maintained, further hydrologic analysis will be required in order to determine if spillway capacity will need to be increased, or if the dam crest will have to be raised. In either case, the scope of work and cost of repairs/improvements will be significantly increased from those provided in the Memorandum.

8. One important part of the hydrologic analysis will be a determination of the degree of flood protection required of the dam. It is the state's responsibility to make this determination. This determination will significantly impact the spillway capacity/dam height that will be required, and associated costs. Conversations with state personnel indicate that the Spillway Design Flood (SDF) required is somewhere between 30 and 100 percent of the Probable Maximum Flood (PMF), with their decision influenced by the size and hazard posed by the dam, the amount of dam reconstruction planned, and any outlet operational plans (or lack of).

9. Pare Engineering Corp. stated that the Spillway Design Flood for this large size, high hazard structure is one-half of the PMF, based upon general state-provided guidance. However, the spillway for Fisherville Pond Dam can discharge only 44 percent of the SDF (i.e. only 22 percent of the PMF) before overtopping). At SDF outflow, the dam would be overtopped by 3.3 feet of water. Any overtopping of an earthen dam is likely to cause failure, therefore the Corps estimate for rebuilding the embankment was based upon a freeboard of 3 feet being maintained at all times. It is therefore highly likely that spillway modifications and/or dam raising costs will likely be quite significant.

10. In summary, the cost of rebuilding the dam is roughly estimated to be $354,000 to $433,000 (outlet and Canal gate repair, clearing of vegetation, O & M and Emergency Action Plan, and miscellaneous activities) plus $50,000 engineering studies (related to hydrology/hydraulic studies, etc.) plus $120,000 (embankment rebuilding) plus undetermined spillway modification and/or dam raising costs. As stated above, the amount of spillway modification and/or dam raising that will be required will depend on a determination by the state on this matter. Total cost of rebuilding Fisherville Pond Dam is therfore roughly $500,000 to $600,000 plus the possible major cost of spillway modification and/or dam raising.

11. The costs provided above do not include the potentially large costs associated with the cleanup of the state Superfund (21E) site (i.e. the mill area) located immediately downstream from the dam. The site is contaminated with releases of heating oil and solvents. In addition, the mill building itself is dilapidated, and may need to get torn down. Costs associated with possible refurbishing of the Blackstone Canal (parallels Fisherville Pond and passes through the mill site) are also not included.

CENED-ED-GD

14 April 1994
Mr. Dunbar/sd/7174

MEMORANDUM FOR Chief, Geotechnical Engineering Division

SUBJECT: Trip Report - Preliminary Embankment Evaluation, Fisherville Pond Dam, Grafton, MA

1. Summary. Two representatives of the Geotechnical Engineering Division and one representative of Planning Directorate performed a site inspection of Fisherville Pond Dam to evaluate it's condition and to address observations made in previous inspections by others. The dam was observed to be in poor condition without an established maintenance or inspection schedule. Observations were made and recommendations given to improve the condition of the dam so as to provide an operable, safe dam for future storage pools within the limits stated in the recommendations. The cost of the recommended improvements are estimated to be $120,000.00 dollars.

2. Purpose. This site visit was requested by Planning Directorate as part of a study of the Blackstone River. The purpose was to evaluate the condition of the dam and develop a preliminary plan and cost estimate to restore the existing dam to operating condition.

3. Date of Inspection. 14 March 1994.

4. Participants.

John C. Hart, Geotechnical Engineering Division
Stephen Dunbar, Geotechnical Engineering Division
Bill Mullen, Planning Directorate

5. Conclusions and Recommendations.

The recommendations made in this trip report are based on the assumption that the dam is never overtopped and a minimum of three feet of freeboard is maintained. Further hydrological analysis may require an increase in spillway capacity and dam crest height, which will significantly increase the scope of work and cost of repairs/improvements recommended in this report. It should be noted that the dam was covered with snow during this inspection; therefore a thorough inspection was not possible. The many inspections performed and reports written addressed the same concerns regarding the integrity of the dam. Those concerns are addressed below:

a. Vegetation. The dam has not been maintained and is nearly completely covered with brush and small trees. The presence of the vegetation makes it impossible to thoroughly inspect the dam, and the root systems create seepage paths which could lessen the integrity of the dam. Therefore, GED concurs with the need to clear and grub the complete surface of the dam as well as the need to clear a 15 foot wide area along the downstream toe for inspection purposes. Grubbed areas and animal burrows should be backfilled with gravel and thoroughly compacted.

b. Surface Runoff. Significant erosion due to surface runoff was not observed during GED's inspection. Erosion due to runoff was noted in the U.S. Army Corps of Engineers Phase I report dated October 1978. Erosion due to runoff could be minimized by topsoil and seeding the upstream slope and dam crest along with the installation of turf reinforcement such as Enkamat Erosion Control Matting. GED also recommends the installation of a 9-inch thick gabion mattress and 3-inch crushed stone bedding layer along the downstream slope and berm (see paragraph d.).

c. Adequacy of Embankment Materials. The information provided by Howland Engineering (borings and correspondence) indicates that the primary embankment materials are firm to very compact, fine to coarse sands and gravels. These materials are not impermeable, but are very stable provided the dam is not overtopped. The materials as described are generally resistant to piping, and shear strengths are high enough to consider the dam safe against a slope failure during the recommended maximum pool storage. Therefore, GED does not feel that the embankment has to be reconstructed as suggested in other reports. Improvements recommended for seepage are discussed in paragraph d.

d. Seepage at Downstream Toe. The seepage at the downstream toe is expected and permissible based on explorations performed by Howland Engineering and materials observed in the field. The gradation and density of materials classified in the boring logs significantly reduce the risk of a piping failure. Furthermore, there were no signs of piping or boils observed during GED's site visit, nor were there any signs reported in any other inspection. For seepage emergence and stability of the downstream toe, GED recommends the addition of a 10 foot wide compacted gravel berm along the downstream toe (with an average thickness of 3 feet) which will extend from the existing dike at the west end of the spillway to a point where the dam begins to meet the abandoned mill (see attached plan and sections). GED also recommends the addition of a gabion mattress and crushed stone bedding layer along the downstream slope and gravel berm. In addition to protection against piping failure, the gabion mattress provides the added benefits of preventing rodents from borrowing into the downstream slope and protecting the slope in the event the dam is overtopped.

e. Riprap on Upstream Slope. Several of the reports recommended that riprap be placed on the upstream slope for protection against wave action. It does not appear from the conditions at the site that stone protection is necessary. The dam is at the far end of an open pond which is relatively calm and covered with lily pads and other vegetation in the summer months. Without having a hydrological analysis available, it is assumed that no significant wave action will develop and that the installation of turf reinforcement will be adequate for slope protection. Should the permanent water level be raised, then riprap would be required.

f. Undercutting of Downstream Slope at Building. Undercutting of the downstream slope at the northwest corner of the old mill building has been mentioned in past reports. This undercutting appears to have been created for the passage of vehicles from the west side of the old mill to the east side. GED did not observe any signs of significant erosion occurring at this

location. A small gabion wall could be constructed in this area to provide vehicles with access to the toe of the dam near the spillway.

g. Monitoring Plan. Once all the improvements as recommended above have been made, an inspection program, including a clear indication as to who is responsible for those inspections, should be established. Specific attention should be given to any seepage at the downstream toe while investigating for other problems such as settlement of the crest, depressions on either the upstream or downstream slope, and vegetation growth in areas to be kept clear.

The recommended improvements, when completed, will produce a dam with an upstream slope of 1 on 3, a downstream slope of 1 on 2, and a constant crest width of 15 feet at elevation 296.7. There will also be a 10 foot wide berm at constant elevation 289.0 which will extend along the downstream toe from the west spillway abutment to a point near the old mill. The upstream slope and crest will have grass cover while the downstream slope and berm will be covered with gabion mattresses. The complete dam surface and an area beyond the toe of the berm will be clear of all vegetation, and must be maintained. Again, the recommendations given in this trip report are based on the assumption that the dam will not be overtopped and a minimum of three feet of freeboard is maintained. A preliminary plan and section showing proposed improvements, along with an estimate of repair and improvement costs are attached. The total cost of repairs and improvements to the dam is estimated to be $120,000.00 dollars. It should be noted that due to the limited survey and soils information available, this estimate is a "ballpark figure" and may significantly change upon further investigation of the dam.

6. Narrative. The Fisherville Pond Dam is a privately owned, 600 foot long earthen dam which extends along the north side of an abandoned mill in Grafton, Massachusetts. The average crest elevation of the dam is El. 296.0 and the sideslopes of the dam are approximately 1 vertical on 3 horizontal. (1 : 3). The estimated downstream toe and upstream water surface elevation is 289.0. There is an existing chain link fence which runs along the crest of the dam which would have to be removed prior to the start of clearing operations.

a. Vegetation. The entire dam, beginning from the east side of the canal gates, is covered with vegetation which varies in size from tall grass to small trees. There were also several abandoned utility poles on the slope of the dam which must be removed. The downstream toe area near the spillway was very wet and marshy and vegetation was heavy. This made it impossible to thoroughly inspect the toe.

b. Surface Runoff. Due to the snow cover, evidence of a surface runoff problem was not observed. This problem has been observed in past inspections. Therefore, GED has recommended topsoil and seeding the area along with turf reinforcement. as a possible solution to the problem.

c. Adequacy of Embankment Materials. Borings were performed through the embankment and foundation in October 1990 by B & J Drilling under the supervision of Howland Engineering, Inc., Nashua, NH. The soils encountered were described as firm to very compact sands and gravels. A visual inspection and classification of on site materials (material piled near burrow holes as well as on the surface) compared well with the descriptions in the boring logs. The high shear strength of compact sands and gravels combined with the relatively flat sideslopes observed in the field were indications that the existing dam is fairly stable.

d. Seepage at Downstream Toe. Ponded water was observed along the downstream toe at the east end of the dam (near the spillway). There were no signs of piping or boils observed. However, the snow cover during the site inspection coupled with the vegetation on the dam and toe area made it impossible to thoroughly inspect the entire dam. The toe area and beyond is relatively flat and is contained by the old mill to the west and the dike along the river to the east. Increased protection against seepage or piping failure, as well as increased stability, could be established by constructing a compacted gravel berm with a gabion mattress cover.

e. Riprap on Upstream Slope. The upstream slope of the dam marks the edge of Fisherville Pond. At the time of the inspection, the pond was very calm and the water level was very low (approximately 8 feet below crest). Photographs of the pond during summer months show that the pond is almost completely covered with lilypads and other water vegetation. It does not appear that wave action is a possible threat to the embankment. Surface erosion has been reported in past inspections, but was not visible at the time of this inspection due to the snow cover. A final upstream slope of 1 vertical on 3 horizontal (1:3) with turf reinforcement is recommended to prevent further erosion of the embankment surface and to provide some protection against increased pool elevations.

f. Undercutting of Downstream Slope at Building. The downstream slope becomes fairly steep at a point where the dam meets the northwest corner of the old mill. It is possible that the dam embankment was partially excavated so that the north side of the building (the marshy area where the seepage was observed) was accessible. It would be possible to construct a gabion wall in this area to provide stability to the embankment as well as maintain access to the north side of the building and downstream toe near the spillway.

g. Monitoring Plan. The existing dam is in poor condition and has not been maintained. Improvements to the dam will only be effective if a responsible party maintains the dam as well as performs periodic inspections. The inspections should target but not be limited to the suspected problem areas such as the seepage at the downstream toe, erosion due to runoff near the spillway abutment, and any settlement or sloughing of the embankment. The responsible party should be established prior to completion of the recommended improvements.

Stephen W. Dunbar
Civil Engineer

Fisherville Pond Dam, Grafton, MA
EstimatedRehabilitation Costs
Geotechnical Engineering Division

Operation:	Qty:	Unit:	Unit Price:	Cost:
Remove Chain Link Fence	600	l.f.	$2.00	$1,200.00
Clearing	1.1	acre	$2,000.00	$2,200.00
Excavation	1480	c.y.	$12.00	$17,760.00
Compacted Gravel Fill (in place)	2240	c.y.	$15.00	$33,600.00
Gabion Mattress (9" thickness)	1440	s.y.	$33.00	$47,520.00
Crushed Stone Bedding (3" thick)	130	c.y.	$12.00	$1,560.00
Topsoil & Seed	3000	s.y.	$4.00	$12,000.00
Turf Reinforcement	1390	s.y.	$3.00	$4,170.00
			Total Cost:	$120,010.00

printed 12:04 PM 04/08/94

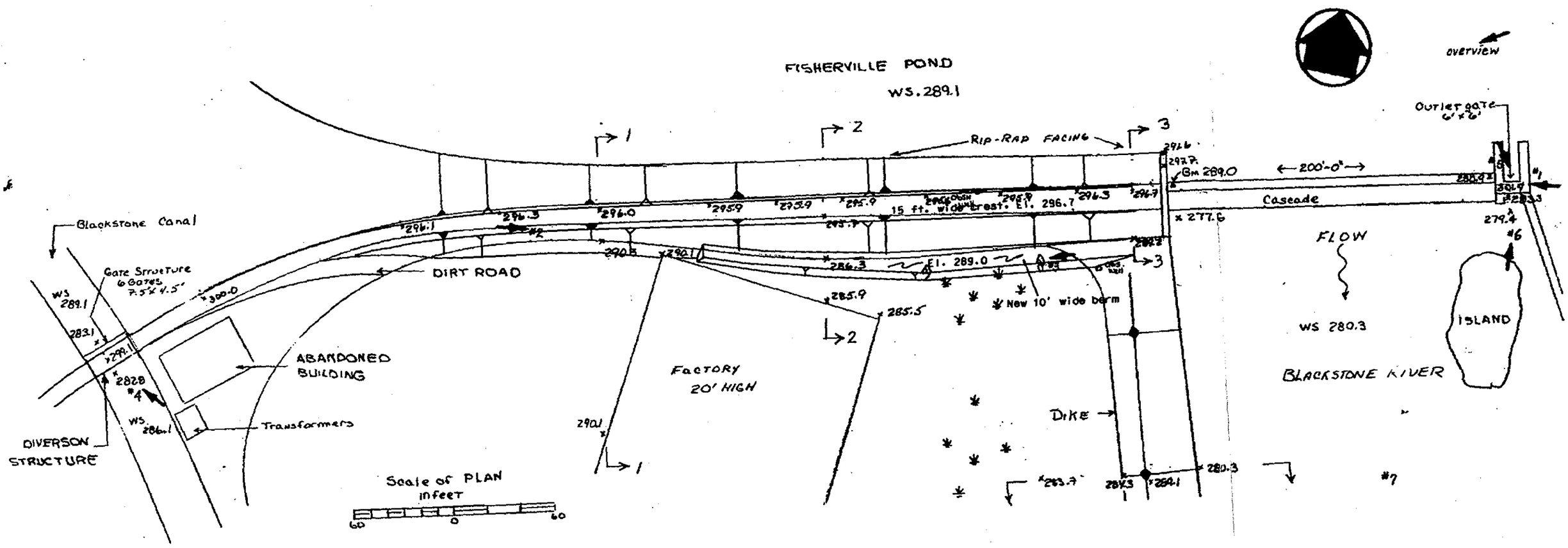

Existing Dam Improvements (Proposed
Geotechnical Engineering Division
& April 1994

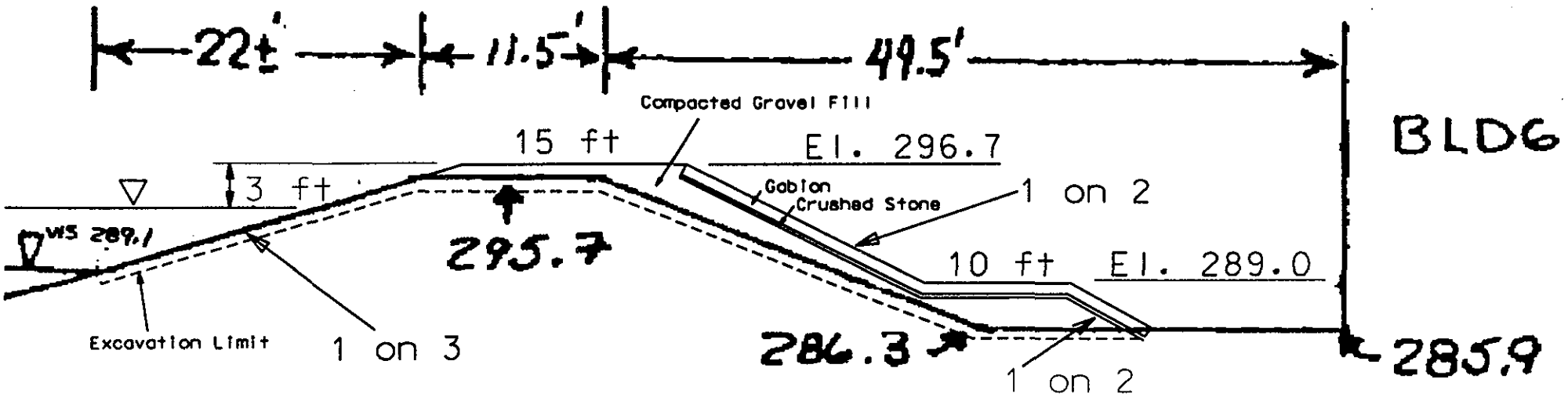

Section 2-2

Scale: 1" = 10'

Existing Dam Improvements (Proposed)
Geotechnical Engineering Division
8 April 1994

Appendix G - Scope of Work for the Blackstone River Watershed Water Quality and Anadromous Fisheries Restoration Study

STATE OF RHODE ISLAND AND PROVIDENCE PLANTATIONS

HISTORICAL PRESERVATION COMMISSION
Old State House
150 Benefit Street
Providence, Rhode Island 02903
401-277-2678 • FAX 401-277-2968 • TDD 401-277-3700

April 4, 1994

Mr. Joseph L. Ignazio
Director, Impact Analysis Division
New England Division
U. S. Army Corps of Engineers
424 Trapelo Road
Waltham, MA 02254-9149

Re: Fish Ladders Feasibility Study
Blackstone River, Rhode Island

Dear Mr. Ignazio:

The Rhode Island Historical Preservation Commission staff has reviewed the information you have provided in your letter of March 9, 1994 regarding the possibility of constructing fish ladders at existing dams to aid in the reintroduction of anadramous fish to the Blackstone River. This environmental restoration goal is certainly a worthy one.

As you note, implementing it has the potential to affect a number of historic dams listed or eligible for listing on the National Register of Historic Places. These ten dams together with the others upstream in Massachusetts exemplify the historical development of American hydraulic engineering from the 18th through the 20th centuries. Together with the river they form a large engineering system devoted to the development and regulation of industrial water power. As historic structures and landscape features they are significant landmarks in the local communities and in the Blackstone Valley as a whole. Activities that lessen their historical integrity should be avoided. Preservation is especially critical at the Slater Mill Dam which is part of the Slater Mill Historic Site, a National Historic Landmark.

The preliminary information on the Denil fishway indicates that the structure would be built on or through the existing dam. This could conceivably result in adverse effects to the dam's appearance and/or its historical integrity. Whether or not such adverse effects would be acceptable would depend on the degree to which a fish ladder would be visually intrusive or would have an impact on the dam structure. We would need to review more information on the fishways, their construction and the possible alternatives to determine the potential impacts more accurately. If the construction of fish ladders on a dam would have a significant adverse effect, then a bypass to the dam may represent an acceptable alternative. For example at Slater Mill Dam, a fishway constructed through the park at the east end of the dam might avoid an intrusive structure on this historic dam.

These comments are provided in accordance with Section 106 of the National Historic Preservation Act. We look forward to working with you on this valuable project. If you have any questions or comments, please contact Richard E. Greenwood, Project Review Coordinator for this office.

Very truly yours,

Edward F. Sanderson
Executive Director
Deputy State Historic
Preservation Officer

cc: Nancy Brittain, BRVNHCC

{2:45}

Mullen -1145

March 9, 1994

Planning Directorate
Impact Analysis Division

Edward F. Sanderson - Executive Director
Rhode Island Historic Preservation Commission
150 Benefit Street

Dear Mr. Sanderson:

The U.S. Army Corps of Engineers, New England Division (NED) is developing a framework for a comprehensive plan to achieve various restoration goals for the Blackstone River in Rhode Island under the Corps' Section 22 Planning Assistance to States Program including restoring anadromous fish, the enhancement of waterfowl habitat, and overall improvement and preservation of the recreational and historic environment in the Blackstone River watershed. Currently we are assessing the feasibility of pursuing this plan further and we would like your preliminary comments on the following.

One part of the project is to assess the feasibility of construction of fish passage facilities (or ladders) at four barriers on the Blackstone River in Rhode Island (see location map). The four dams are: the Main Street Dam in Pawtucket, the Slater's Mill Dam in Pawtucket, the Elizabeth Webbing Mill Dam in Central Falls/Pawtucket (also known as the Pawtucket, Central Falls, and Pantex Dam), and the Valley Falls Dam in Cumberland/Central Falls (also known as the Samoset Dam). The main purpose for the construction of the fish ladders is to facilitate the restoration of anadromous fish by providing both upstream and downstream passage over or around the dams to allow access to habitat areas. Currently, we have only very preliminary, technical sketch plan information from the U. S. Fish and Wildlife Service (enclosed).

The fishway would consist of a 4-foot wide Denil fishway with a 1 on 8 floor slope. A Denil fishway has 2 vertical walls, usually constructed out of 10" to 12" thick reinforced concrete and a concrete floor slab. The reinforced concrete slab can range from 15" thick to greater than 24" depending upon design loads and local building codes. The distance between the walls for all 4 Blackstone River projects would be 4 feet. The projected height of the walls is 6 feet from the floor slab to the top of the concrete. At the entrance channel, the section of the fishway where the upstream migrating anadromous fish enter and the water exits, the walls will probably be several feet higher due to greater tailwater depths.

The fishway entrance channel has a level floor slab. It is designed so that at minimum operating flows there is 2 feet between the water surface and the slab. This may require some ledge or concrete excavation and/or dredging to get to the necessary design depth. The entrance channel is normally placed at a 45 degree angle towards the flow coming over the dam. A channel may have to be dredged or excavated leading from the downstream fishway entrance and measuring about 20 feet long, 2 feet wide, and with a depth tapering down from a maximum of two feet.

We understand that project locations are situated within the Blackstone River National Heritage Corridor which was established by the United States Congress in 1986. This corridor includes approximately 250,000 acres, dozens of cities, towns, and villages, and over a half-million people. The Federal government does not own or manage any of the Corridor's lands; instead a consortium including the Blackstone River National Heritage Corridor Commission, interested individuals and organizations, local and state governments, and the National Park Service work together for the protection of this resource. This area's preservation is significant as a surviving example of the Industrial Period within the United States.

There are a variety of historic and archaeological resources within the proposed project area and its vicinity. The National Heritage Corridor mentioned above is the primary area of concern, although many other resources exist. The Blackstone Canal Historic District is located adjacent to the Blackstone River and along its length are numerous period (circa 1825) structures, bridges, locks, towpaths, etc. which contribute to its significance (Morenon and Raber 1989). This area is perceived to have a high sensitivity for containing both prehistoric and historic archaeological remains. The Slater's Mill Dam, Elizabeth Webbing Mill Dam, and the Valley Falls Dam and Mill are currently listed on the National Register of Historic Places. The Main Street Dam, though currently eligible for listing on the National Register, is not presently listed as such.

It should be noted that further on in this study, the feasibility of improving fish passage at other dams within the Blackstone River throughout Rhode Island will be studied in phases. These would include the following:

Pratt, Ashton, Albion, and Manville (the next series of four) followed by Woonsocket Falls and Saranac Mill as the final phase in Rhode Island (Saranac Mill Dam is located in Massachusetts, however the power house is within Rhode Island).

A series of historic mill districts are located along portions of the Blackstone River. These are described in detail in the Phase I Archaeological Survey of the area conducted for a proposed bikepath in 1989 by the Public Archaeology Program at Rhode Island College. These include the villages of Lonsdale,

Ashton, Albion, Manville, and Hamlet (Morenon and Raber 1989). Ashton and Albion Dams are both components of the Ashton and Albion National Register Historic Districts, respectively. Pratt is not listed; however, it is felt to be eligible (RIHPC, personal communication).

Several of the dams are used for hydroelectric power generation, although Slater's Mill and Pratt Dams are not being used for such purposes. Our main concerns are with the construction of these fish ladders within a National Heritage Corridor, as well as within National Register Historic Districts and properties. Prehistoric and historic archaeological remains may also be a concern at many of the areas. We assume that construction of the ladders may have to conform to standards developed for building within historic districts and that the ladders would have to not diminish the historic integrity of these properties. We would appreciate any preliminary comments on the preceding undertaking, including any restraints, restrictions, or concerns on the construction of the fish ladders.

If you have any questions, please contact Mr. Marc Paiva, project archaeologist of the Impact Analysis Division at (617) 647-8796.

Sincerely,

Joseph L. Ignazio
Director of Planning

Enclosures

cc:
Paiva
Davis
Ring
Mullen (114 S) ✓
Plan Exec Ofc File
Reading File
IAD File

Appendix G - Scope of Work for the Blackstone River Watershed Water Quality and Anadromous Fisheries Restoration Study

Appendix A

Blackstone River Watershed Water Quality and Anadromous Fisheries Restoration Study
Section 22 Planning Assistance to the States Program
Scope of Work

I. Introduction:

a. Authority:

The Corps of Engineers was requested by the States of Massachusetts and Rhode Island with the support of the Blackstone River Valley National Heritage Corridor Commission to conduct an investigation of the feasibility of restoring anadromous fish and enhancing waterfowl habitat in the Blackstone River watershed. This study would be conducted under the authority contained in the Corps of Engineers' Section 22, Planning Assistance to States Program. The study would also be conducted in cooperation with the Coastal America Initiative.

b. Background:

The Blackstone River Valley region has long been recognized for its historic significance in the birth of the American Industrial Revolution. In 1986, Congress passed Legislation to establish the Blackstone River Valley National Heritage Corridor in Massachusetts and Rhode Island for the purposes of preserving the significant national heritage contribution of the region and to provide a management framework to assist state and local governments in the development and implementation of management programs to retain and enhance the corridor.

The Blackstone River watershed occupies most of northern Rhode Island and extends northerly into south central Massachusetts. The Blackstone River itself originates in the southern part of Worcester, Massachusetts and flows south to the Main Street Dam in Pawtucket, Rhode Island. There it becomes the Seekonk River, a tidal estuary, which in turn flows south to the Providence River, a northern arm of Narragansett Bay. The fall over the entire length is approximately 440 feet.

The Blackstone River originally attracted industry because of the water power potential of the river. Dams were built to capture this energy and convert it to mechanical power for industry. Many of the impoundments behind these earthen dams also provide significant waterfowl habitat. Factories were built for the production of firearms, textile machinery, cotton thread, woolen and cotton cloths, dyeing of cloth, and many support industries. The Blackstone River was also heavily used for waste disposal. Dyes containing mercury, chromium, and other toxic metals were rinsed out of cloths at the mills. Tannic acid was dumped by the tanneries and metals by metalworking shops. As population grew in the region, the river became the discharge point for human waste. There is also the concern that the degradation of the dams, specifically Coves Pond, Fisherville Pond, and Lackey Pond, will result in the loss of existing waterfowl habitat.

With the passage of Federal legislation in the 1970's, new and improved treatment facilities have been constructed to address the major sources of waste discharge. Measures have also been undertaken to correct the combined sewer overflow problems in Worcester and to better regulate illegal industrial discharges to the River. Although these efforts have improved the overall water quality of the river, there remains a significant water quality problem. The Blackstone River is the largest source of pollutants such as suspended solids, PCB's, metals and organics discharging to Narragansett Bay. The source of this pollution is principally due to continued discharge of metals to the river and in the resuspension of contaminated sediments in the River.

The States of Massachusetts and Rhode Island are interested in resolving the water quality problems of the River and ultimately improving its overall resource value. One of the goals is the restoration of anadromous fisheries to the River. There has been significant study of the various problems and opportunities of the Blackstone River, but most of them have been either site specific or limited to single issues. The States and the Heritage Commission recognize that a comprehensive plan is required to look at the interrelated problems of the watershed, identify and summarize the results of prior investigations of these problems, and outline a course of action to achieve the goal of restoring the resource value of the Blackstone River.

c. Study Purpose and Scope:

The purpose of this investigation is to develop the framework for a comprehensive plan to evaluate and correct the water quality and related problems of the Blackstone River. As part of this effort, the study will address enhancing waterfowl habitat and the potential success of restoring anadromous fisheries to the watershed and identify the steps required to accomplish the restoration. The study will review pertinent reports prepared by Federal, State and other agencies and will identify ongoing or planned studies and projects in the watershed. The study will be coordinated with all appropriate Federal, State and interested parties. The scope of this study will be limited to existing information available from Federal, State and other sources.

II. Project Tasks

a. Data Collection:

Identify and describe existing and ongoing Federal, State and other studies or projects which have addressed or provide information on the water quality and related problems of the watershed. Identify and summarize existing water quality models, water and sediment sample analysis, land use information, habitat information and other pertinent data.

b. Problem Identification Summary:

Based on the the information collected in task 1, develop a summary description of the water quality and related problems of the Blackstone River and its tributaries. The description should outline the interrelationship of the various issues and problems.

c. Comprehensive Planning Strategy:

Develop a comprehensive planning strategy to evaluate the problems of the Blackstone River watershed, develop and analyze alternative solutions, and select a course of action. The study will review prior studies and outline required additional investigations.

d. Anadromous Fisheries Restoration:

Evaluate the current potential for the restoration of anadromous fisheries to the Blackstone River watershed and if not presently feasible, identify the steps necessary for possible future restoration. The anadromous fisheries restoration analysis will be conducted in a phased approach focussing on potential short term actions (lower 4 dams) and identifying the long term activities.

- List the target species for the restoration. Include short descriptions of life histories, and how they will become part of the Blackstone River aquatic resource, as well as benefits to estuarine areas. Estimate future population size potential for each species as various phases of the restoration are completed.

- Document the criteria required for the restoration of each of the target species. Identify, based on information and assistance provided by the Rhode Island, Department of Environmental Management, Division of Fish, Wildlife and Estuarine Resources, potential spawning and nursery areas for habitat restoration.

- Identify obstructions to fish passage. Provide a list of each dam. This list should include a general description, information about ownership, current use practices (hydropower, canals, etc.), and existing agreements relating to anadromous fish restoration.

- The US Fish & Wildlife Service, under one of their existing technical assistance programs, will develop conceptual designs and preliminary cost estimates for fish passage facilities at the lower four dams. This study will provide technical support to the F&W effort which includes; the installation of headwater and tailwater staff gages at the dams, the collection of three data sets, and the research and collection of mapping and plans on the dams.

- Identify potential impacts on the restoration efforts due to the operation of turbines, water withdrawals, and bypass flow patterns. For the areas directly impacted by the first 4 dams, discuss potential strategies to mitigate identified problems.

- In cooperation with US Fish and Wildlife Service, review existing permits which have been issued by the Federal Energy Regulatory Commission (FERC) for minimum water releases and future fishway construction agreements.

- Identify the role of all state and Federal regulatory agencies in addition to various permitting processes necessary to accomplish each phase of the effort.

e. Waterfowl Habitat Enhancement and Restoration:

Evaluate the current and potential for the enhancement and possible restoration of waterfowl habitat along the Blackstone River watershed and if not presently feasible, identify the steps necessary for possible future restoration. The waterfowl habitat enhancement analysis will be conducted in a phased approach focussing on potential short term actions and identifying the long term activities.

- Describe waterfowl habitat goals and the species such habitat would likely effect. Describe ecological interactions that would occur under such enhancement habitat conditions and any environmental impacts.

- Document the criteria required for the restoration of various species. Identify, based on information provided by the Massachusetts Division of Fisheries and Wildlife, potential sites for habitat restoration.

- For each dam, provide a general description, information about ownership, current use practices (hydropower, canals, etc.), its current flow operation, and minimum discharge requirements. If the dams were identified as high hazard dams, identify any studies which addressed the problems at the dam and any planned actions to repair the defects.

- For the Fisherville Pond Dam, conduct a limited site visit (2 engineers, 1 day each) to review the condition of the dam, identify possible defects in the site and provide a gross estimate of the cost to repair the dam.

- Review the normal yearly flow conditions in the Blackstone River and identify if the operation of any of the facilities on the dam would be problematic in the enhancement of waterfowl habitat.

- Identify the role of all state and Federal regulatory agencies in addition to various permitting processes necessary to accomplish each phase of the effort.

f. Identification of Available Funding Options:

The study will identify any existing Federal, State or other programs or funding sources which could be utilized to accomplish the goal of improving the resource value of the Blackstone River watershed.

III. Report Documentation

The Corps will develop a Technical Data Report which documents the results of the project. The report will include a 3-5 page Executive Summary which outlines the major points of the report. The report will be submitted to the States and other agencies in draft form for comment and review. Upon resolution of provided comments, the New England Division will prepare the final report.

IV. Project Coordination

The study will be conducted by the New England Division of the Corps of Engineers with the assistance of the various State resource agencies. The New England Division will coordinate with the States on all issues concerning the study which deviate from the original scope of work. The New England Division will maintain coordination with all appropriate Federal and State agencies throughout the study. Information concerning the investigation will also be provided to appropriate local communities and interested parties.

V. Project Cost and Completion Schedule

The cost of the study as outlined has been estimated at $80,000 with a completion schedule of nine months. The State of Rhode Island will provide $16,250 of the $40,000 non-Federal portion of the study, the Commonwealth of Massachusetts will provide $13,750 and the Blackstone River Valley National Heritage Corridor will provide the remaining $10,000.