WAR DEPARTMENT CORPS OF ENGINEERS

407-620A

PROPOSED DIKE WORK
CONNECTICUT RIVER
ANALYSIS OF DESIGN
CONCRETE STOP-LOG STRUCTURE
BOSTON & MAINE RAILROAD
AT DIKE STA. 198+76.31
CHICOPEE, MASS.

DATE	REVISION	REV. BY	CK. BY	AP. BY

CONNECTICUT RIVER FLOOD CONTROL

PROPOSED DIKE WORK

STOP-LOG STRUCTURE

BOSTON & MAINE RAILROAD

CHICOPEE, MASS.

U.S. ENGINEER OFFICE, PROVIDENCE, R.I.

SUBMITTED:	APPROVAL RECOMMENDED:	APPROVED:
Knud B. Nielsen	J. S. Burns	J. P. Bragdon
SENIOR ENGINEER HEAD, DESIGN SECTION	PRINCIPAL ENGINEER CHIEF, F.C. ENGINEERING DIV.	LT. COL. CORPS OF ENGINEERS DISTRICT ENGINEER

DESIGNED:	COMPUTED BY: JJP	FILE NO. CT-4-1244
J. C. Dingwall ASS'T. ENGINEER	CHECKED BY: CWBM	TO ACCOMPANY SPECIFICATIONS DATED DEC. 23, 1939.

WAR DEPARTMENT

U. S. ENGINEER OFFICE, PROVIDENCE, R. I.

Subject Chicopee Dike

Computation B & M R.R. Stop-log Structure

Computed by JGP **Checked by** JCT **Date** Dec. 1938

U. S. GOVERNMENT PRINTING OFFICE 3—10

This is the complete Analysis of Design for the concrete stop-log structure proposed at the Boston & Maine Railroad - Dike Sta 198+76.31 Chicopee Mass.

The basic structure consists of cantilever walls, parallel to the railroad, retaining the earth dike. Grooves are provided for timber stop-logs. A structural steel support is to be placed midway between the walls to decrease the stop-log span and thereby allow the use of timber for stop-logs.

Loading conditions comply with those recommended for Flood Walls & similar structures.

For further details of structure see drawings File Nos CT-4-1230, CT-4-1231, CT-4-1232 & CT-4-1233

WAR DEPARTMENT

U. S. ENGINEER OFFICE, PROVIDENCE, R. I.

Subject Chicopee Dike

Computation B & M RR Stop-Log Structure

Computed by JGP **Checked by** W. S. Tx. **Date** Dec. 1938

U. S. GOVERNMENT PRINTING OFFICE 3—10

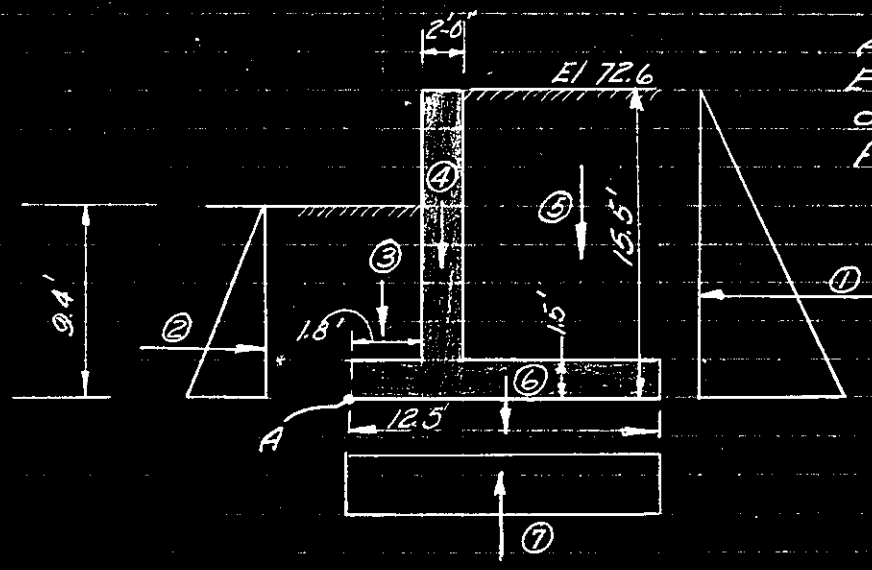

Assume water falling, at El. 66.5 saturated earth on both sides of wall, Full uplift

Moments About "A"

Force	Dimensions	Magnitude	Arm	Moments
3 ↓	125 x 1.8 x 7.9	1780	0.9	1600
4 ↓	150 x 2 x 14	4200	2.8	11750
5 ↓	125 x 8.7 x 14	15200	8.15	124000
6 ↓	150 x 1.5 x 12.5	2820	6.25	17630
7 ↑	62.5 x 12.5 x 9.4	7350	6.25	45900
ΣV		16650		109080
1 ←	$80 \times \overline{15.5}^2 \times \frac{1}{2}$	9600	5.17	49600
2 →	$80 \times \overline{9.4}^2 \times \frac{1}{2}$	3530	3.13	11050
ΣH		6070		38550

$\Sigma M_V = 109080$ '#

$\Sigma M_H = 38550$ '#

$\frac{\Sigma M}{\Sigma V} = \frac{70530}{16650} = 4.24'$, middle third is at 4.17'

Eccentricity $= \frac{12.5}{2} - 4.24 = 2.01'$

$\frac{\Sigma V}{b}\left(1 \pm \frac{6e}{b}\right) = \frac{16650}{12.5}\left(1 \pm 6 \times \frac{2.01}{12.5}\right) = 1330(1 \pm .97)$

Pressure railroad side = 2620 #/□'

" dike side = 40 #/□'

Subject: Chicopee Dike
Computation: B & M R.R. Stop Log Structure
Computed by: JGP Checked by: CWEM Date: Dec. 1938

U. S. GOVERNMENT PRINTING OFFICE 3—100

Sliding

neglecting passive resistance

$$\frac{\Sigma H}{\Sigma V} = \frac{6070}{16650} = .36$$

DESIGN OF STEM

1. At stop-log grooves

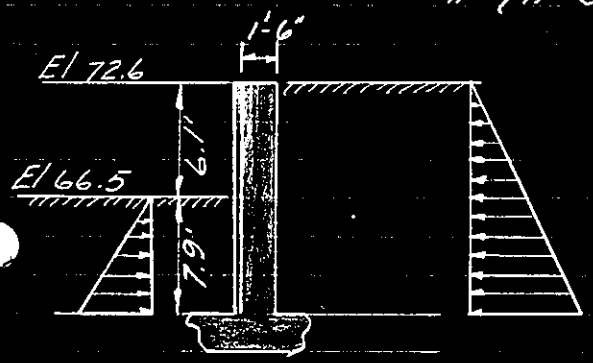

H_T	H_T^3 (net)	M 1# $13.33 H_T^3$	d "	A_s	Bars Dike side
1	1	10	14.5	–	7/8"φ @ 1'-0"
3	27	360	"	–	"
4	64	850	"	.04	"
5	125	1665	"	.09	"
6.1	227	3025	"	.16	"
8	504	6720	"	.35	"
10	936	12480	"	.65	"
12	1512	20200	"	1.05	1"□ @ 1'-0"
14	2232	29880	"	1.56	1"□ @ 6"

$f_s = 18000$ #/□", $j = .884$, $d = 14.5$

Bars - R.R. side use 5/8" φ @ 1'-0" (Temperature steel)

Unit shear at ground line $= \dfrac{\frac{1}{2} \times 80 \times \overline{6.1}^2}{12 \times .884 \times 14.5} = 9.7$ #/□"

Unit shear at base of stem

$$= \frac{\left(\frac{1}{2} \times 80 \times \overline{14}^2\right) - \left(\frac{1}{2} \times 80 \times \overline{8}^2\right)}{12 \times .884 \times 14.5} = 34.4 \text{ \#/□"}$$

Subject: Chicopee Dike
Computation: B & M RR Stop-Log Structure
Computed by: JGP Checked by: [illegible] Date: Dec. 1938

U. S. GOVERNMENT PRINTING OFFICE 3—10

2. At edge of crown

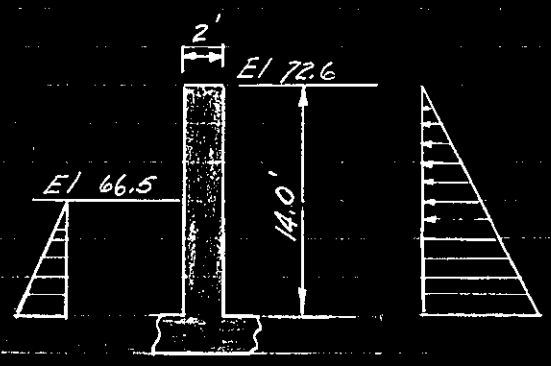

H_T	H_T^3	$M'^{\#}$ $13.33\ H_T^3$	d	A_s	Bars Dike Side
4	64	850	20.5	.03	3/4"φ @ 1'-0"
6.1	227	3025	"	.10	do
8	504	6720	"	.24	do
10	936	12480	"	.46	1"φ@1' 3/4"φ@1
12	1512	20200	"	.75	do
14	2232	29880	"	1.10	do

Bond at stop log groove

$$u = \frac{V}{\Sigma o j d}$$

Shear at 10' = $V = \frac{83 \times 10^2}{2} - \frac{83 \times 4^2}{2} = 3490^{\#}$

$$u = \frac{3490}{2.75 \times .88 \times 14.5} = 99\ \#/\square''$$

at 14' $V = \frac{83 \times 14^2}{2} - \frac{83 \times 8^2}{2} = 5480^{\#}$

$$u = \frac{5480}{6.75 \times .88 \times 14.5} = 63\ \#/\square''$$

3. At point midway along slope

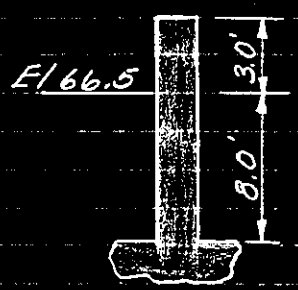

H_T	H_T^3 Net	M ft.lbs	d	A_s	Bars Dike Side
3	27	360	20.5	—	3/4"φ @ 1'-0"
5	117	1580	"	.06	"
7	279	3720	"	.14	"
9	513	6850	"	.25	"
11	819	10920	"	.40	"

Subject: Chicopee Dike
Computation: B & M R.R. Stop-Log Structure
Computed by: JGP Checked by: C.W.B.M. Date: Dec. 1938

U. S. GOVERNMENT PRINTING OFFICE 3—10

Design of Base
1. RR Side

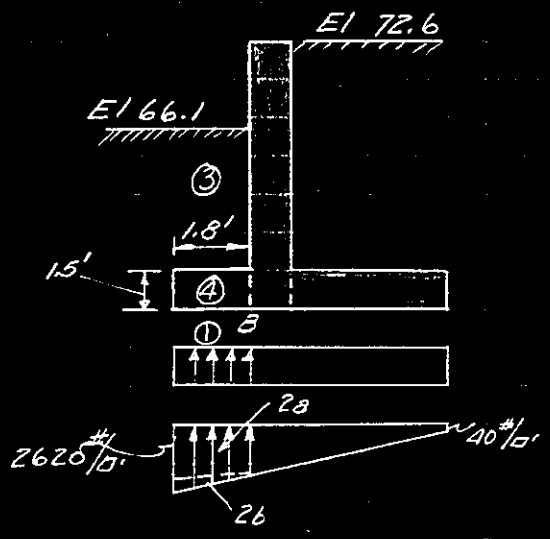

Moment about "B"			Vertical Forces	
Force	Dimensions	Magnitude	Arm	Moment
3 ↓	125 x 1.8 x 7.9	1780	0.9	1600
4 ↓	150 x 1.8 x 1.5	405	0.9	365
1 ↑	62.5 x 9.4 x 1.8	1060	0.9	950
2a ↑	2240 x 1.8	4030	0.9	3620
2b ↑	380 x 1.8 x ½	340	1.2	410
Σ ↓↑		3245 # ↑		3015 '# ↑

$$A_s = \frac{M}{f_s j d} = \frac{3015 \times 12}{18000 \times .88 \times 14.5} = .157 \ \square''$$

¾"φ @ 1'-0"

$$\text{Shear} = \frac{V}{b j d} = \frac{3245}{12 \times .88 \times 14.5} = 21 \ \#/\square''$$

$$u = \frac{3245}{2.36 \times .88 \times 14.5} = 107 \ \#/\square''$$ special anchorage

2 Dike Side

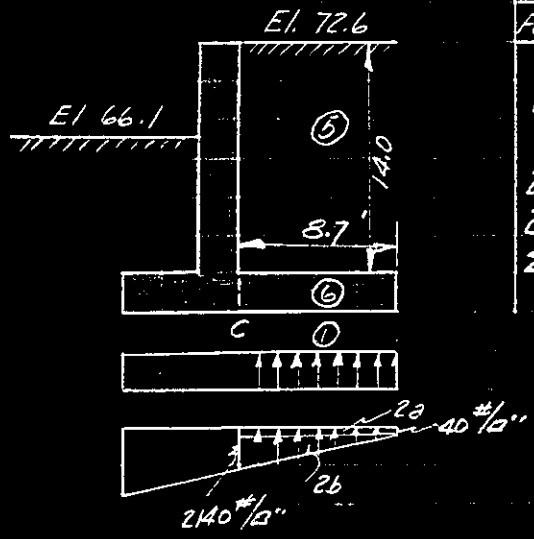

Moment about "C"			Vertical Forces	
Force	Dimensions	Magnitude	Arm	Moment
5 ↓	125 x 8.7 x 14	15200	4.35	66000
6 ↓	150 x 8.7 x 1.5	1960	4.35	8550
1 ↑	62.5 x 8.7 x 9.4	5110	4.35	22250
2a ↑	40 x 8.7	350	4.35	1520
2b ↑	2140 x 8.7 x ½	9300	2.90	27000
Σ		2400 # ↓		23780 '# ↓

$$A_s = \frac{23780 \times 12}{18000 \times .88 \times 14.5} = 1.23 \ \square''$$

⅞"φ @ 6" c-c

$$v = \frac{2400}{12 \times .88 \times 14.5} = 15.7 \ \#/\square''$$

$$u = \frac{2400}{5.5 \times .88 \times 14.5} = 34.2 \ \#/\square''$$

Subject Chicopee Dike
Computation B.&M. R.R. Stop-Log Structure
Computed by JGP Checked by CW.BM Date Dec 1938

U. S. GOVERNMENT PRINTING OFFICE 3—10

Section Halfway Down Slope

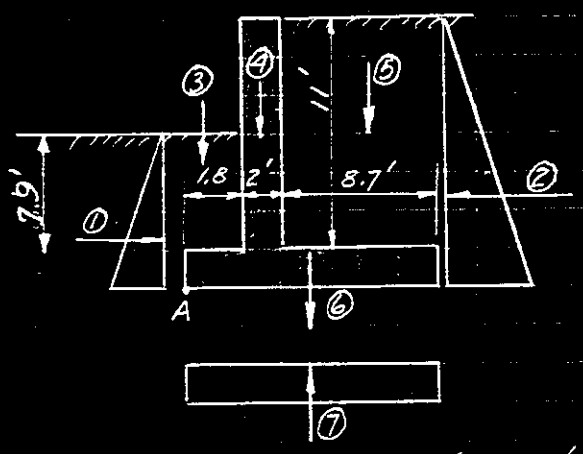

Moments About "A"

Force	Dimensions	Magnitude	Arm	Moments
3 ↓	125 x 1.8 x 7.9	1780	0.9	1600
4 ↓	150 x 2 x 11	3300	2.8	9240
5 ↓	125 x 8.7 x 11	11960	8.15	97500
6 ↓	150 x 1.5 x 12.5	2820	6.25	17630
7 ↑	62.5 x 12.5 x 9.4	7350	6.25	45900
ΣV		12330#		80070 '#
1 →	80 x $\overline{9.4}^2$ x ½	3530	3.13	11050
2 ←	80 x $\overline{12.5}^2$ x ½	6250	4.17	26100
ΣH		2720#		15050 '#

$\Sigma M_v = 80070$
$\Sigma M_h = 15050$

$$\frac{\Sigma M}{\Sigma V} = \frac{65020}{12330} = 5.27'$$

$$\text{Eccentricity} = \frac{12.5}{2} - 5.27' = .98'$$

$$\frac{\Sigma V}{b}\left(1 \pm \frac{6e}{b}\right) = \frac{12330}{12.5}\left(1 \pm \frac{6 \times .98}{12.5}\right) = 990(1 \pm .47)$$

Pressure railroad side = 1450 #/□"
" dike side = 530 #/□"

Subject: Chicopee Dike
Computation: B & M R.R. Stop-Log Structure
Computed by: JGP Checked by: CWBM Date: Dec. 1938

U. S. GOVERNMENT PRINTING OFFICE 3—10

Base design (section halfway down slope)

1. RR Side

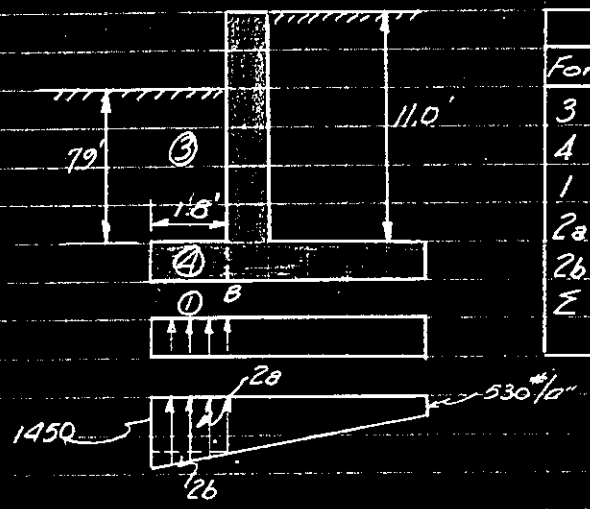

Moments about "B"		Vertical Forces		
Force	Dimensions	Magnitude	Arm	Moment
3 ↓	125 x 1.8 x 7.9	1780	0.9	1600
4 ↓	150 x 1.8 x 1.5	405	0.9	365
1 ↑	62.5 x 9.4 x 1.8	1060	0.9	950
2a ↑	1315 x 1.8	2360	0.9	2130
2b ↑	135 x 1.8 x ½	120	1.2	150
Σ		1355 ↑		1265'# ↑

$$A_s = \frac{M}{f_s j d} = \frac{1265 \times 12}{18000 \times .88 \times 14.5} = .07$$

$\frac{5}{8}$" ϕ @ 1'-0"

2. Dike Side

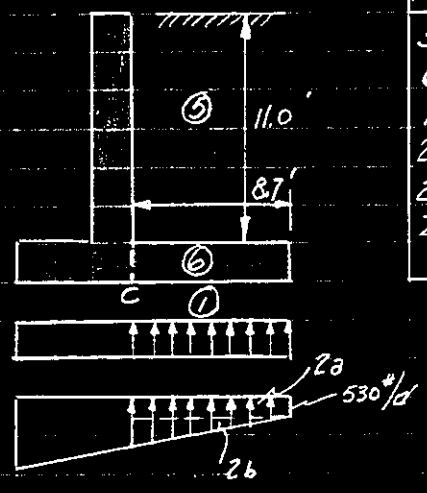

Moment about "C"		Vertical Forces		
Force	Dimensions	Magnitude	Arm	Moment
5 ↓	125 x 8.7 x 11	11960	4.35	52000
6 ↓	150 x 8.7 x 1.5	1960	4.35	8550
1 ↑	62.5 x 8.7 x 9.4	5110	4.35	22250
2a ↑	530 x 8.7	4610	4.35	20000
2b ↑	650 x 8.7 x ½	2830	2.90	8200
Σ		1370 ↓		10,100 ↓

$$A_s = \frac{10100 \times 12}{18000 \times .88 \times 14.5} = .53 \square''$$

$\frac{7}{8}$" ϕ @ 1'-0"

Subject: Chicopee Dike
Computation: B&M R.R. Stop-Log Structure
Computed by: JGP Checked by: [illegible] Date: Dec 1938

U. S. GOVERNMENT PRINTING OFFICE 3—10

Sheet pile cap use $\frac{1}{2}$"ϕ @ 1'-0" temperature steel

Stop log beams

$H = 6'$

bottom beam $L = 15'$ $w = 62.5 \times 6 = 375$ #/'

$M = 375 \times \overline{15}^2 \times 12/8 = 127000$ '# per ft. of depth

assume beam 6"x8"

Allowable $M = fS = 1750 \times \frac{5.5 \times \overline{7.5}^2}{6} = 90200$ '#

Actual $M = 127000 \times 5.5/12 = 58000$ '#

$V = 375 \times \frac{5.5}{12} \times \frac{15}{2} = 1290$ #

Allowable $V = \frac{2}{3}\, bdv = \frac{2}{3} \times 7.5 \times 5.5 \times 128 = 3520$ #

Bearing $1290\#/5.5 \times 5 = 46$ #/□' allowable $= 380$ #/□'

Center Support (between tracks)

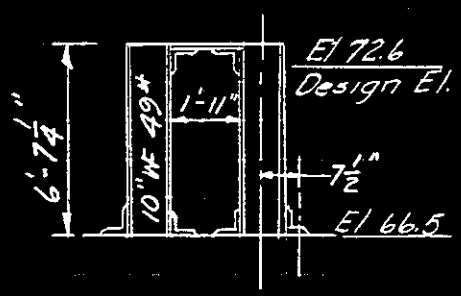

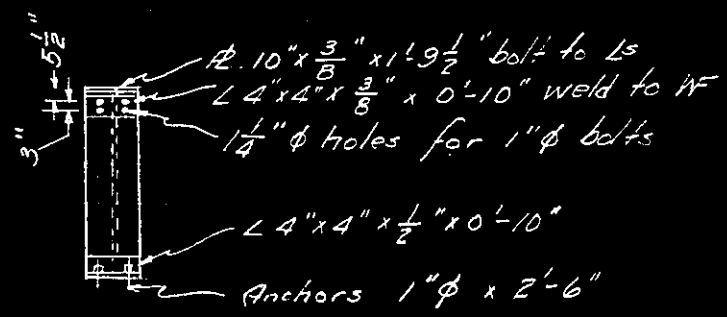

Max load on one WF $= \frac{P}{2} \times \frac{2}{3} \times \frac{wh^2}{2} = 62.5 \times \frac{\overline{6.1}^2}{2} \times \frac{2}{3} \times 15 = 11600$ #

Allowable load (10" WF 49#) = 41000 #

$M = 17450 \times 6.1/3 = 35450$ '# Allowable = 82000 '#

Note:- 10" WF 49" was used to obtain enough bearing surface for stop-log timbers on the flanges