# Design Analysis
# Volume II - Structural Calculations

# Regional Training Site-Maintenance
# Fort Devens, Massachusetts

## Concept Design (35%) Submittal

**US Army Corps**
**of Engineers**
New England Division
February 1994

# Regional Training Site - Maintenance
Fort Devens, MA.

35% Submittal
February 1994

Structural Calculations

# INDEX


| SUBJECT | PAGE |
|---|---|
| * SNOW & DRIFT LOAD | 1 |
| * WIND LOADS | 2 |
| *TANK WORK BAY FRAMES* | |
| * CRANE LOAD & SUPPORT DESIGN | 9 |
| * DEAD LOAD ANALYSIS | 17 |
| * SEISMIC LOADS | 20 |
| * TYPICAL FRAME - DEAD LOAD REACTIONS | 21 |
| - LIVE LOAD REACTIONS | 22 |
| - WIND LOAD REACTIONS | 23 |
| * BEARING CAPACITY ANALYSIS OF CRITICAL FOOTINGS IN ACCORDANCE WITH TM5-818-1 | |
| - TYPICAL FRAME | 25 |
| - FIRST INTERIOR FRAME | 32 |
| - END FRAME | 35 |
| - END WALLS & LONGITUDINAL LOADS (BIAXIAL LOADING) | 38 |
| * FOOTING REINFORCEMENT/SHEAR (TYPE A) | 44 |
| * SLAB ON GRADE DESIGN | 46 |
| * ENGINE TEST ROOM | 46A |
| *DEVICE LAB & CLASSROOM AREA* | |
| * DEAD LOAD ANALYSIS | 47 |
| * TYPICAL DEVICE LAB FRAME | 49 |
| - FRAME LOADS | 50 |
| * DEVICE LAB END FRAME | 52 |
| - FRAME LOADS | 53 |
| - BEARING CAPACITY ANALYSIS | 55 |
| * COLUMN LINE 3 FRAME | 59 |
| - FRAME LOADS | 60 |
| * BEARING END FRAME | 61 |
| - FRAME LOADS | 61 |
| - BEARING CAPACITY ANALYSIS | 65 |
| *FOOTING REINFORCEMENT/SHEAR (TYPE B) | 69 |
| *ADDITIONAL WORK FOR 95% SUBMISSION | 71 |
| -FOOTING C DESIGN | 72 |
| -DEEP FOOTING BEARING CAPACITY (COL LINE F-8) | 80 |
| -COMBINED FOOTING BEARING CAPACITY (EF-1) | 90 |
| -CONCRETE FRAME-WALL DESIGN | 96 |
| -CMU DESIGN | 130 |
| -CALCULATION CHECK, 6" STEM INCREASE, CRITICAL FOOTINGS CHECKED BY HAND & COMPUTER | 140 |
| -COMPUTER CHECK OF HAND CALCULATIONS, PAGES 65-69, COMMENT 3B | 158 |
| -STEP FOOTING DETAILS | 171 |
| -LOAD TABLE | 177 |
| *REFERENCES | 180 |
| *APPENDIX A | A1 |
| *APPENDIX B | B1 |

27 Sept 49 CORPS OF ENGINEERS, U.S. ARMY PAGE 1

SUBJECT RTS-Maint.

COMPUTATION SNOW & DRIFT LOAD

COMPUTED BY SAG CHECKED BY DATE 5-22-89

Fort Devens Ma. (Per TM5-809-1 "Load assumptions for Bldgs")

| Ground Snow Load (psf) | Frost Penetration IN. | Basic (MPH) Wind Speed |
|---|---|---|
| 45 | 64 | 80 |

Snow Load per MBMA

Min Roof live load = 20 psf

Basic Snow eq. $P_f = 0.7 P_g$

Roof Slope reduction, Cs for $a > 30°$, $a = 9.46° < 30°$ ∴ $C_S = 1$

Importance factor: Bldg. Cat III, $I = 1.2$ (Table C4.1)

$P_f = .7\, I\, C_s\, P_g = .7(1.2)(1)(45) = \boxed{37.8 \text{ psf}}$

Design Conditions: Balanced & Unbalanced for 2/12 slope

Drift per MBMA

Drift needs to be considered when

$$\frac{h_r - h_b}{h_b} > 0.2 \quad , \quad h_b = \frac{P_{f1}}{D}$$

$P_{f1}$ = Roof snow load on lower roof

Max intensity $P_t = D(h_d + h_b) \leq D h_r$

Basic equation. $h_d = \sqrt{\frac{W_b\, P_{fu}}{8D}} \leq h_r - h_b$

$h_d$ = height of drift above uniform roof snow
$h_r$ = Difference in roof heights
$h_b$ = height of uniform snow load on lower roofs
$W_b$ = horizontal Dim. of upper roof
$P_{fu}$ = Uniform snow load on upper roof = 37.8 psf
$D$ = Snow drift density
$D = .24 P_g + 9 \leq 30$
$W$ = width of drift taken as the smaller of $4h_d$ or $4(h_r - h_b)$

SUBJECT RTS- Maint

COMPUTATION SNOW & DRIFT LOAD

COMPUTED BY SAG CHECKED BY DATE 5-22-88

## Check Drift from Tank Repair Roof

$P_g = 45 psf$, $P_{f_L} = P_{f_U} = 37.8$ psf

$D = 0.24(45) + 9 = 19.8$ pcf $\leq 30.0$ ok

$h_b = \frac{37.8 \text{ psf}}{19.8 \text{ pcf}} = 1.91'$

$h_r = 37.375 - 22.43 = 14.945'$

$\frac{h_r - h_b}{h_b} = \frac{14.945' - 1.91}{1.91} = 6.82 > 0.2$

$W_b = 125.54'$, $P_{f_U} = 37.8$ psf

$h_r - h_b = 14.945' - 1.91' = 13.03'$

$h_d = \sqrt{\frac{(125.54)(37.8)}{8(19.8)}} = 5.47' < 13.03$ ok

$W = 4(5.47') = \underline{21.88'}$ or $4(13.03') = 52.12'$
Controls

$h_b + h_d = 1.91 + 5.47 = 7.38' < 14.945'$ ok

$P_T = 7.38' \times 19.8 \text{ pcf} = \underline{146.1 \text{ psf}}$

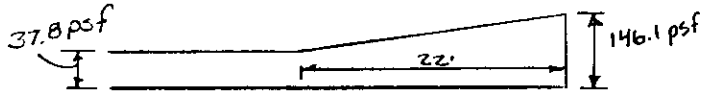


## Drift from Device Lab roof

$P_g = 45$ psf, $P_{f_L} = P_{f_U} = 37.8$ psf, $D = 19.8$ pcf, $h_b = 1.91$

$h_r = 21.62' - 16.375' = 5.25'$

$\frac{h_r - h_b}{h_b} = \frac{5.25 - 1.91}{1.91} = 1.75 > 0.2$

$W_b = 50.0'$, $h_r - h_b = 5.245 - 1.91 = 3.34'$

$h_d = \sqrt{\frac{(50)(37.8)}{8(19.8)}} = 3.45' > 3.34$ $\therefore$ $h_d = 3.34'$

$W = 4(3.34') = 13.36'$, $h_b + h_d = 1.91 + 3.34 = 5.25$

$P_T = 5.25' \times 19.8 = \underline{104 \text{ psf}}$

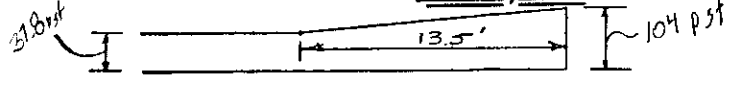

27 Sept 49 CORPS OF ENGINEERS, U.S. ARMY PAGE 3

SUBJECT RTS-Maint

COMPUTATION Wind Load

COMPUTED BY SAG CHECKED BY DATE 5-18-89

## Wind Loads (Per MBMA Criteria)

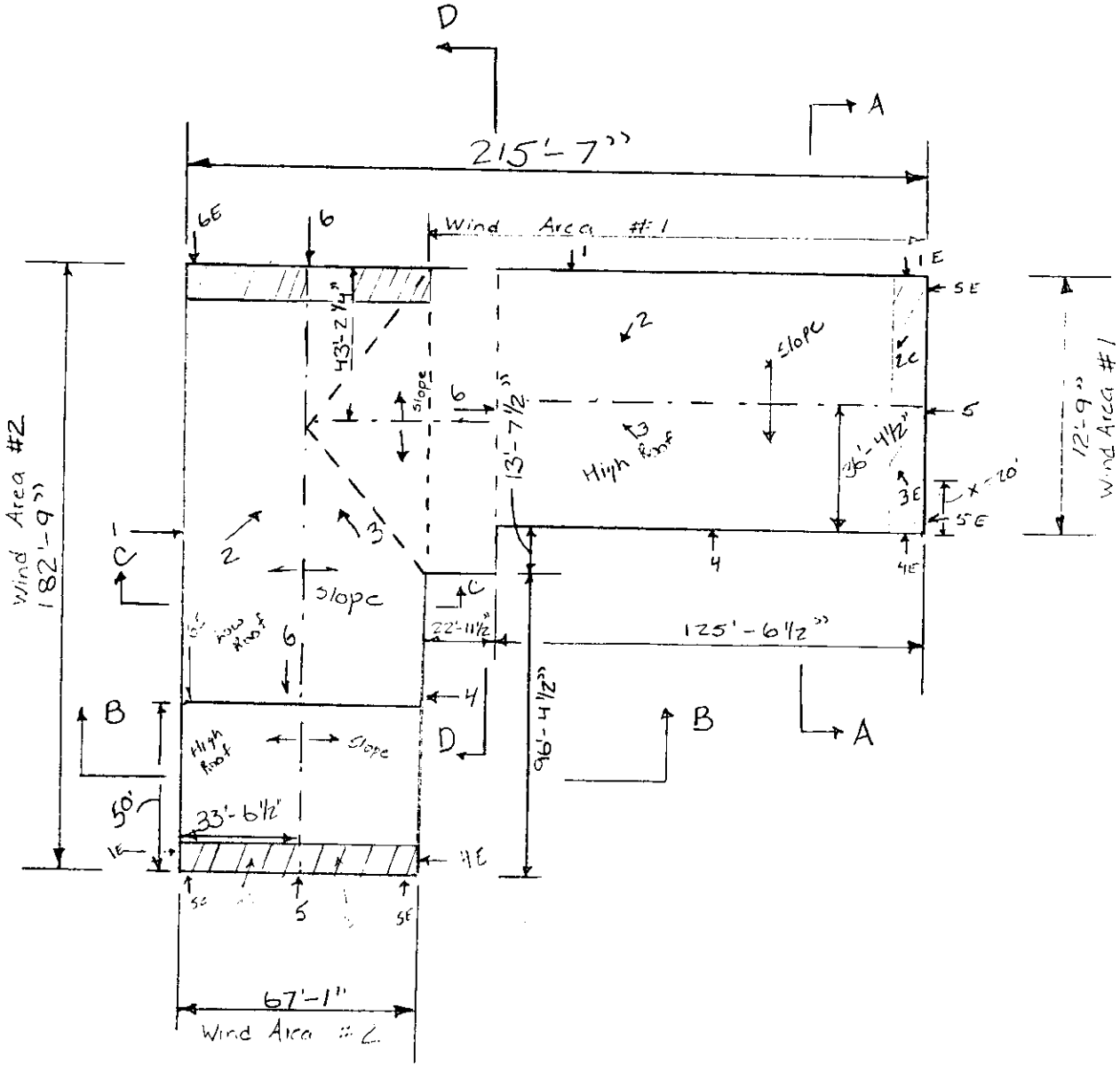


The building is Considered "Enclosed" Since the windows, doors, and rollup doors are designed to resist the wind pressure. The roll up doors will not be open permanately.

SUBJECT RTS-Maint.

COMPUTATION Wind Load

COMPUTED BY SAG CHECKED BY DATE 5-18-89

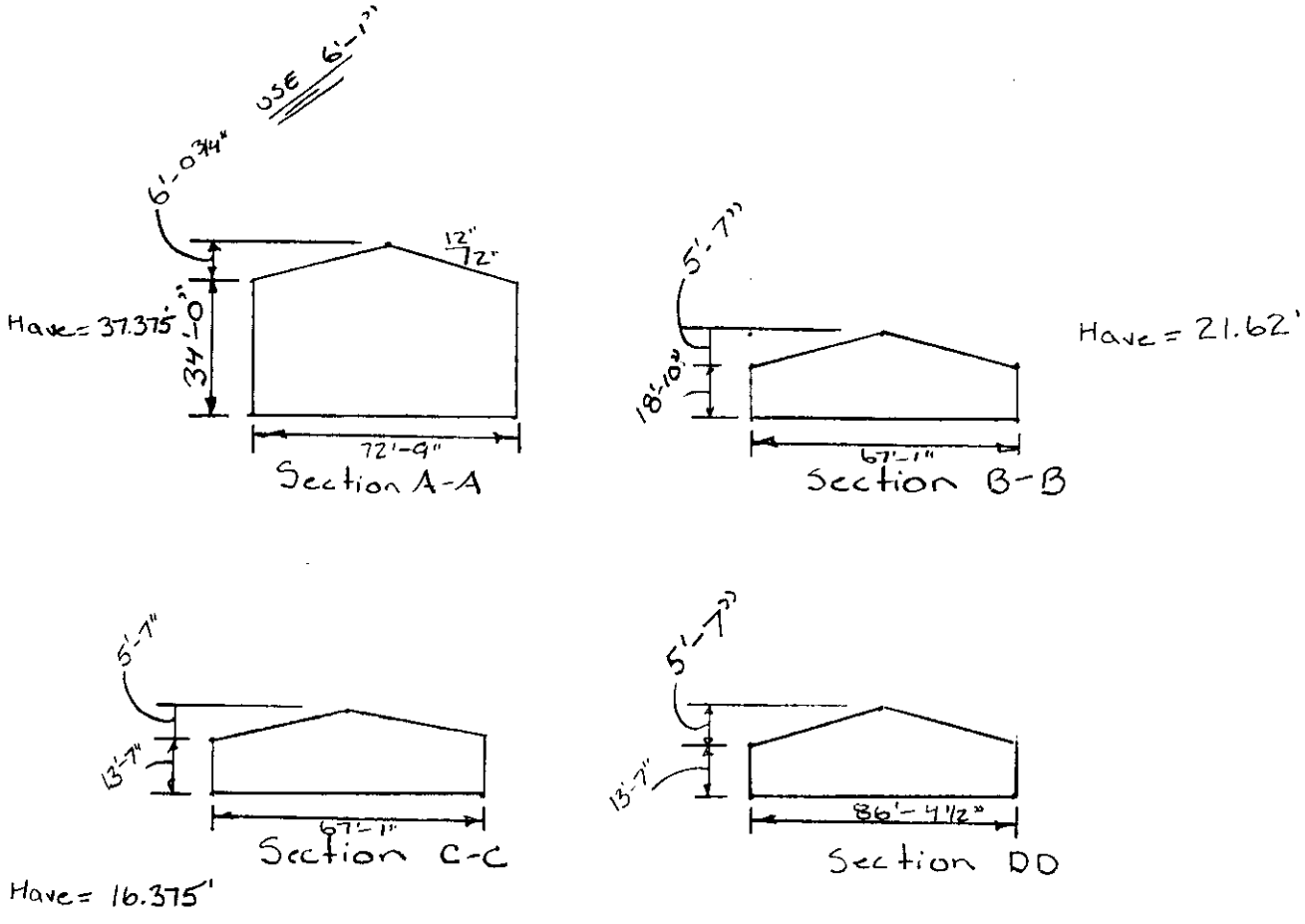


USE MAX Have = 37'

Data: 2/12 Slope => $\alpha = 9.46°$
Design wind speed = 80 MPH
Building Category III, $I = 1.10$
Location: 25 Mi inland
Bay spacing varies
Endwall column spacing varies
End Rigid Frames

$$\text{Velocity Pressure} = 0.00256\,(IV)^2\left(H/33\right)^{2/7}$$
$$= 0.00256\,(1.1 \times 80)^2\left(37/33\right)^{2/7}$$
$$= \underline{\underline{20.48 \text{ psf}}}$$

$$-\text{Velocity Pressure} = 0.00256\,(1.1 \times 80)^2\left(21.62/33\right)^{2/7}$$
$$\underline{\underline{17.57 \text{ psf}}}$$

(Positive Sign means inward acting pressure)

SUBJECT RTS - Maint.
COMPUTATION Wind load
COMPUTED BY SAG CHECKED BY DATE 5-18-89

## 1. WIND AREA #1

Determine Width of Edge Strip, Z
the smaller of
1. 10% of 72.75 = 7.275'
2. 40% of 34.0 = 13.6
but not less than
1. 4% of 72.75 = 2.91'
2. = 3.0'

∴ Z = 7.2'

Det. Width of End Zone, X
The larger of
1. 2Z = 14.55'
* 2. = 20.0'

Load on Main Frame — bay spacing varies

A. Interior Rigid Frame

Case I

| Load Location | Int. Zone Coeff. GCp | Load (Psf) (GCpq) |
|---|---|---|
| 1. Wall | +.25 | (.25)(20.48) = +5.12 |
| 2. Roof | -1.0 | (-1)(20.48) = -20.48 |
| 3. Roof | -.65 | (-.65)(20.48) = -13.31 |
| 4. Wall | -.55 | (-.55)(20.48) = -11.26 |

Case II

| | | |
|---|---|---|
| 1. Wall | +.65 | (+.65)(20.48) = +13.31 |
| 2. Roof | -.60 | (-.60)(20.48) = -12.29 |
| 3. Roof | -.25 | (-.25)(20.48) = -5.12 |
| 4. Wall | -.15 | (-.15)(20.48) = -3.07 |

B. Longitudinal Wind Bracing (End Wall)

Case I

| | | |
|---|---|---|
| 5. Int End Wall | +.25 | +.25(20.48) = +5.12 |
| 6. Int End Wall | -.55 | -.55(20.48) = -11.26 |
| 5E. Ext. End Wall | +.50 | +.50(20.48) = +10.24 |
| 6E. Ext. End Wall | -.70 | -.70(20.48) = -14.37 |

SUBJECT RTS-Maint

COMPUTATION Wind load

COMPUTED BY JAG CHECKED BY DATE 5-18-89

## Case II

| | | | (Psf) |
|---|---|---|---|
| 5. IEW | +.65 | +.65(20.48) = | 13.31 |
| 6. IEW | -.15 | -.55(20.48) = | 11.26 |
| 5E. EEW | +.90 | +.90(20.48) = | 18.43 |
| 6E. EEW | -.30 | -.70(20.48) = | 14.36 |

## Transverse Wind Bracing (End Rigid Frame)

| Load location | End Zone Coeff. $GC_{p2}$ | Int Zone Coeff $GC_{p1}$ | Load (plf) $GC_{p1} \times q \times$ 1/2 bay spacing $+ (GC_{p2} - GC_{p1}) \times q \times x$ |
|---|---|---|---|
| **Case I** | | | |
| 1E wall | +.5 | +.25 | (.25)(20.48)(11.04) + (.5-.25)(20.48)(200) = 158.9 |
| 2E Roof | -1.4 | -1.0 | (-1.0)(20.48)(11.04) + [(-1.4-(-1.0)](20.48)(200) = -390 |
| 3E Roof | -.80 | -.65 | (-.65)(20.48)(11.04) + [(-.8)-(-.65)](20.48)(200) = -208. |
| 4E wall | -.70 | -.55 | (-.55)(20.48)(11.04) + [(-.7)-(-.55)] 20.48(200) = -186. |
| **Case II** | | | |
| 1E wall | +.9 | +.65 | (.65)(20.48)(11.04) + (.9-.65)(20.48)20. = 249. |
| 2E Roof | -1.0 | -.60 | (-.6)(20.48)(11.04) + (-1.-(-.6))(20.48)(20) = -299. |
| 3E Roof | -0.4 | -.25 | (-.25)(20.48)(11.04) + (-.4-(-.25))(20.48)(20) = -118. |
| 4E wall | -0.3 | -.15 | (-.15)(20.48)(11.04) + (-.3-(-.15))20.48(20) = -95. |

## 2. Wind Area #2

- Width of edge strip, Z
  - *1. 10% of 67.08 = 6.7
  - 2. 40% of 18.83 = 7.53
- Width of end zone, X
  - 1. 2Z = 13.46
  - *2. x = 20.0

## Load on Main Frame

| Load location | Int. Zone Coeff. ($GC_p$) | Load ($GC_p q$) Psf |
|---|---|---|
| **A. Interior Rigid Frame** | | |
| **Case I** | | |
| 1. wall | +.25 | (+.25)(17.57) = 4.39 psf |
| 2. Roof | -1.0 | (-1.)(17.57) = -17.57 psf |
| 3. Roof | -.65 | (-.65)(17.57) = -11.42 psf |
| 4. Wall | -.55 | (-.55)(17.57) = -9.66 psf |
| **Case II** | | |
| 1. wall | +.65 | (+.65)(17.57) = +11.42 psf |
| 2. Roof | -.60 | (-.60)(17.57) = -10.54 |
| 3. Roof | -.25 | (-.25)(17.57) = -4.39 |
| 4. Wall | -.15 | (-.15)(17.57) = -2.63 |

SUBJECT RTS-Maint.
COMPUTATION Wind load
COMPUTED BY SAG CHECKED BY DATE 5-18-89

## B. Longitudinal Wind Bracing (End Wall)

### Case I

| | | |
|---|---|---|
| 5. Int. End Wall | +.25 | +.25(17.57) = 4.39 psf |
| 6. Int. EndWall | -.55 | -.55(17.57) = 9.66 |
| 5E. Ext End Wall | +.50 | +.50(17.57) = 8.785 |
| 6E Ext Endwall | -.70 | -.70(17.57) = 12.30 |

### Case II

| | | |
|---|---|---|
| 5. Int. Endwall | +.65 | +.65(17.57) = 11.42 psf |
| 6. Int Endwall | -.15 | -.15(17.57) = 2.63 psf |
| 5E Ext. Endwall | +.90 | +.90 (17.57) = 15.81 psf |
| 6E Ext. Endwall | -.30 | -.30 (17.57) = 5.27 psf |

## Transverse Wind Bracing (End Rigid Frame)

### Case I

| Load location | End Zone Coeff ($GCP_2$) | Int Zone Coeff ($GCP_1$) | Load (PIF) $GCp_1 \times q \times 1/2$ bay + $(GCp_2 - GCp_1) \times q \times x$ |
|---|---|---|---|
| 1E Wall | +.5 | +.25 | (.25)(17.57)(25/2) + (.5-.25)(17.57)(20) = 54.9 |
| 2E Roof | -1.4 | -1.0 | (-1.0)(17.57)(25/2) + (-1.4 - -1.0)(17.57)(20) = -360. |
| 3E Roof | -.80 | -.65 | (-.65)(17.57)(25/2) + (-.8 - -.65)(17.57)(20) = -195. |
| 4E Wall | -.70 | -.55 | (-.55)(17.57)(25/2) + (-.7 - -.55)(17.57)(20) = -173. |

### Case II

| | | | |
|---|---|---|---|
| 1E Wall | +.9 | +.65 | (.65)(17.57)(25/2) + (.90 - .65)(17.57)(20) = 22 |
| 2E Roof | -1.0 | -.60 | (-.6)(17.57)(25/2) + (-1. - -.6)(17.57)20 = -272. |
| 3E Roof | -0.4 | -.25 | (-.25)(17.57)(25/2) + (-.4 - (-.25)(17.57))20 = -107. |
| 4E Wall | -0.3 | -.15 | (-.15)(17.57)(25/2) + (-.3 - (-.15)(17.57))(20) = -85.4 |

Rollup door design Pressures: 16' x 14' = 224 ft²
Coeff. = 1.14, 1.05
Max Pressure = -1.14(20.48)(.9) = 21 psf

SUBJECT RTS-Maint

COMPUTATION

COMPUTED BY SAG CHECKED BY DATE

# TANK WORK BAY AREA

SUBJECT RTS - Maint

COMPUTATION Crane Calculations

COMPUTED BY SAG CHECKED BY DATE 5-18-89

CRANE CRITERIA : PER MBMA & TM5-809-1

All Craneways (except manually powered cranes) will have their design loads increased for impact as follows:

1. Vertical Force equal to 25% of the maximum wheel load.
2. A lateral force equal to 20% of the weight of the trolley and lifted load only applied one half at the top of each rail.
3. A longitudinal force of 10 percent of the maximum wheel load of the crane, applied at the top of the crane rail.
   (Design of longitudinal bracing)

Deflection of Runway Beams

- shall not exceed 1/600 for maximimum wheel load wo impact in the vertical
- shall not exceed 1/400 in the horizontal for full lateral force.

Notes: The building manufacturer will be responsible for the design of all crane support brackets and connections to the bldg. frame.

See - MBMA, "Low Rise Building Systems Manual" 1986 for crane load positioning and Criteria.

SUBJECT RTS-Medical
COMPUTATION CRANE Calculations
COMPUTED BY SAG CHECKED BY DATE 5-19-89

## Crane Supports

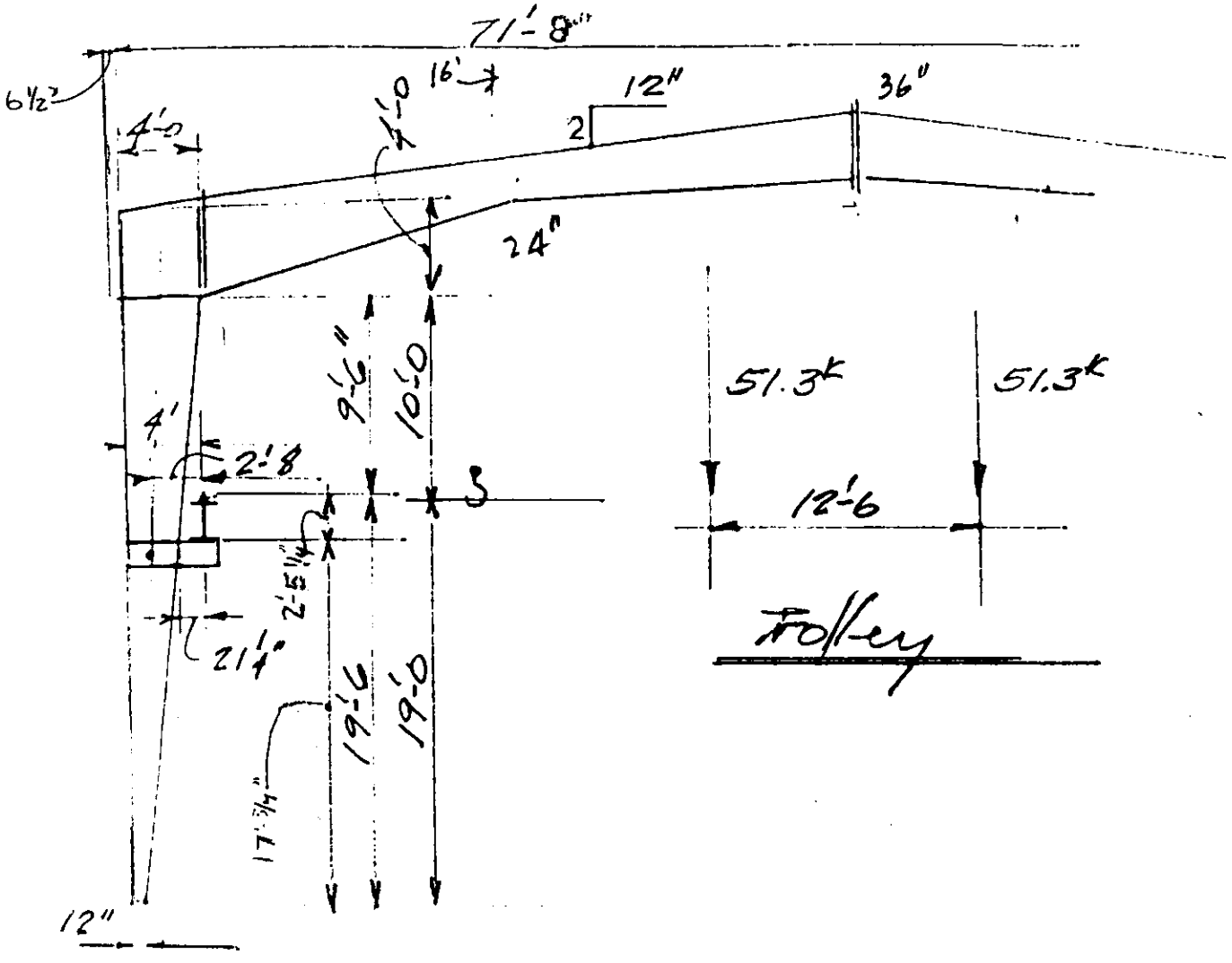


CRANE: Shepard Niles Series 1000 - 4 Wheel Crane
Max Wheel load 51.3 K (See Appendix A)
Rail 60 # /yd

Door 16' X 14' High

SUBJECT RTS - Maint.

COMPUTATION Tank Work Bay Frames - Crane Girder

COMPUTED BY SAG CHECKED BY DATE 5-19-89

## 1. CRANE GIRDER (25% Impact)

Max wheel load = 51.3K (See Appendix A)
Add Impact = 51.3(1.25) = $\boxed{64.125K}$

Find critical load location

1.

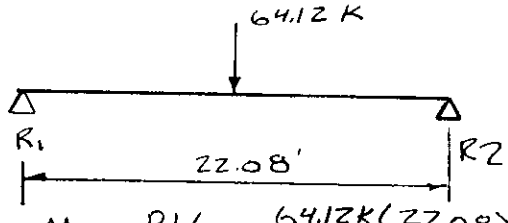


$M = PL/4 = \frac{64.12K(22.08)}{4} = 353.94$ FT-K

2.

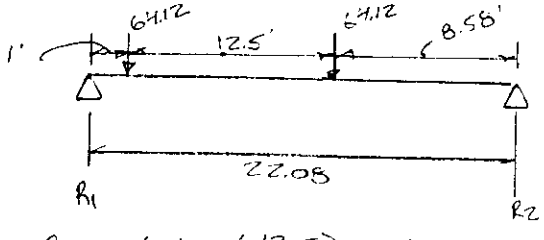


$R_2 = \frac{64.12(13.5) + 64.12(1)}{22.08} = 42.1$ K, $R_1 = 86.1$K

$M_2 = 42.1(8.58') = 361.22$ FT-K

3.

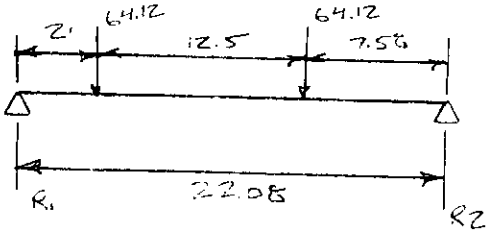


$R_2 = \frac{(64.12)(14.5) + 64.12(2)}{22.08} = 47.91$ K, $R_1 = 80.33$

$M_2 = 47.91(7.58) = \underline{\underline{363.16 \text{ FT-K}}}$ Max

SUBJECT R.T.S. - Maint.

COMPUTATION Tank Work Bay Frames - Crane Girder

COMPUTED BY SAG CHECKED BY DATE 5-19-89

4.

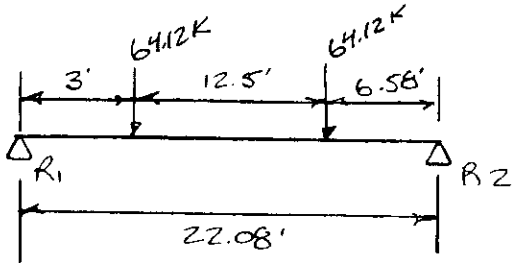


$$R_2 = \frac{(64.12K)(15.5) + 64.12(3)}{22.08'} = 53.72, \quad R_1 = 74.52$$

$$M_2 = 53.72(6.58) = 353.5 \text{ FTK}$$
$$M_1 = 74.52(3.0) = 223.56 \text{ FT-K}$$

Lateral Load (20%)

$$\text{Weight} = \text{Capacity}/2 + W_{\text{Hoist \& Trolley}}/2$$
$$= 25K + 8K = 33K \times .2 = 6.6K$$

$$M_{max_y} = \frac{6.6(14.5) + 6.6(2)}{22.08}(7.58') = \underline{\underline{37.4 \text{ FT-K}}}$$

Girder - W24 x 162 lb/FT
Rail - 60 lb/yd or 20 lb/FT
182 lb/FT

$$\underline{\underline{M_{max}\ X}} = \frac{.182(7.58)}{2}(22.08 - 7.58') + 363.16 \text{ FT-K}$$

$$= \underline{\underline{373.16 \text{ FT-K}}}$$

$$\underline{\underline{M_{max}\ y}} = \underline{\underline{37.4 \text{ FT-K}}}$$

SUBJECT RTS - Maint

COMPUTATION Tank Work Bay Frames - Crane Girder

COMPUTED BY SAG CHECKED BY DATE 5-19-89

$F_{by}$ from AISC, Section 1.5.1.4.3

$F_{by} = .75(36) = 27.0$ KSI

W24x162, $S_x = 414$ IN$^3$, $S_y = 68.4$ IN$^3$

$L_c = 13.7$ ft, $L_u = 29.3$ ft

$\therefore$ USE $F_b = .6 F_y = 22$ KSI

$$f_{bx} = \frac{373.16(12)}{414} = 10.82 \text{ KSI}$$

Assuming the Top Flange resists the lateral load

$$f_{by} = M_y / S_y/2 = \frac{37.4(12)}{68.4/2} = 13.12 \text{ KSI}$$

Check AISC formula 1.6-2 (with $f_a = 0$)

$$\frac{f_{bx}}{F_{bx}} + \frac{f_{by}}{F_{by}} = \frac{10.82}{22} + \frac{13.12}{27} = .977 < 1.0 \text{ OK}$$

Check Deflections

$E = 29{,}000$ KSI
$I_x = 5170$ IN$^4$
$I_y = 443$ IN$^4$

Check location (1)

$$\Delta x = \frac{Pl^3}{48EI} + \frac{5wl^4}{384EI} < 1/600$$

$$= \frac{51.3(22.08)^3 1728}{48(29{,}000)(5170)} + \frac{5(.182)(22.08)^4 1728}{384(29{,}000)(5170)} = .168 < \frac{22.08(12)}{600} = .442 \text{ OK}$$

$$\Delta y = \frac{Pl^3}{48EI} = \frac{6.6(22.08)^3 1728}{48(29{,}000)(5170)} = .017 < \frac{22.08(12)}{400} = .662$$

Check critical location (3)

$\Delta x_{max} = .179$ IN $< .442$ OK (See Appendix B)

$\Delta y_{max} = .2065$ IN $< .662$ OK

$\boxed{\text{USE W24x162}}$

SUBJECT R.T.J.- Maint

COMPUTATION TANK WORK BAY Frames - Crane Girder Support

COMPUTED BY SAG CHECKED BY DATE 5-19-89

Crane Girder Support

Find critical Reaction

1.

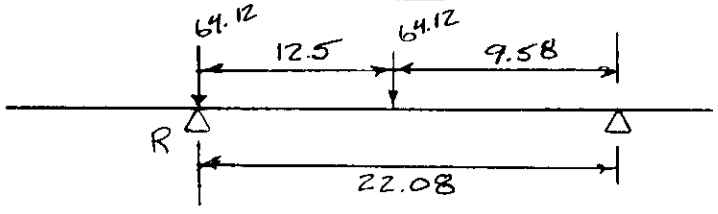


$$R = 64.12 + \frac{64.12(9.58)}{22.08} = \underline{\underline{91.94\ K}}$$

2.

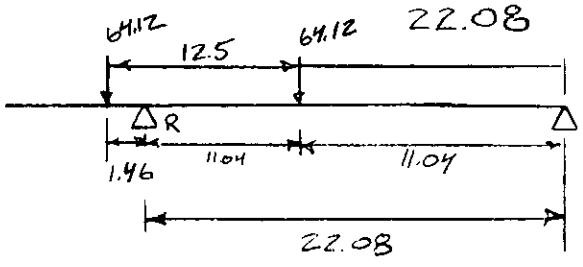


$$R = 64.12/2 + \frac{64.12(18.54)}{20} = 91.50K$$

3.

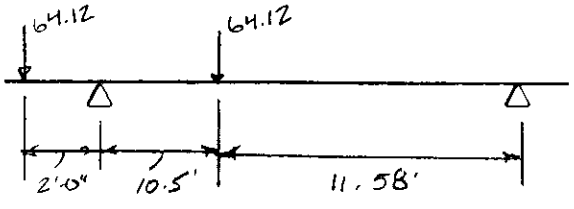


$$R = \frac{64.12(18)}{20} + \frac{64.12(11.58)}{22.08} = 91.34K$$

$P_{max} = 91.94K + .182(21.04) = 95.77\ K$

$M_{cant} = 95.77\ (1.77) = 169.51\ FT\text{-}K$

Take longitudinal force as a lateral force

$P_y = .1(51.3) = 5.13\ K$, $M_y = 5.13(1.77) = 9.08\ FT\text{-}K$

$\underline{\underline{\text{Try } W16 \times 77,\ S_x = 134\ IN^3,\ S_y = 26.9\ IN^3}}$

assume top flange resists loads

$$f_{by} = M_y/S_y/2 = \frac{9.08(12)}{26.9/2} = 8.10\ KSI$$

SUBJECT RTS - Maint.

COMPUTATION TANK WORK BAY Frames - Crane Girder Support

COMPUTED BY SAG CHECKED BY DATE 5-19-89

$$f_{bx} = \frac{169.51(12)}{134} = 15.18 \text{ KSI}$$

Check AISC Formula 1.6-2

$$\frac{15.18}{22} + \frac{8.10}{27} = .99 < 1.0 \quad \text{O.K.}$$

<u>Deflections</u> $I_x = 1110 \text{ IN}^4$
$I_y = 138 \text{ IN}^4$

$$\Delta_{MAX\,x} = \frac{Pl^3}{3EI} = \frac{95.77(1.77)^3(1728)}{3(29{,}000)(1110)} = .0095 < 1/600 = .03 \text{ OK}$$

$$\Delta_{MAX\,y} = \frac{5.13(1.77)^3(1728)}{3(29{,}000)(138)} = .0041 < 1/400 = .0531$$

SUBJECT RTS - Maint.

COMPUTATION Tank Work Bay Frames - Crane Building Loads

COMPUTED BY SAG CHECKED BY DATE 5-19-89

## Crane Loads on Building (No impact)

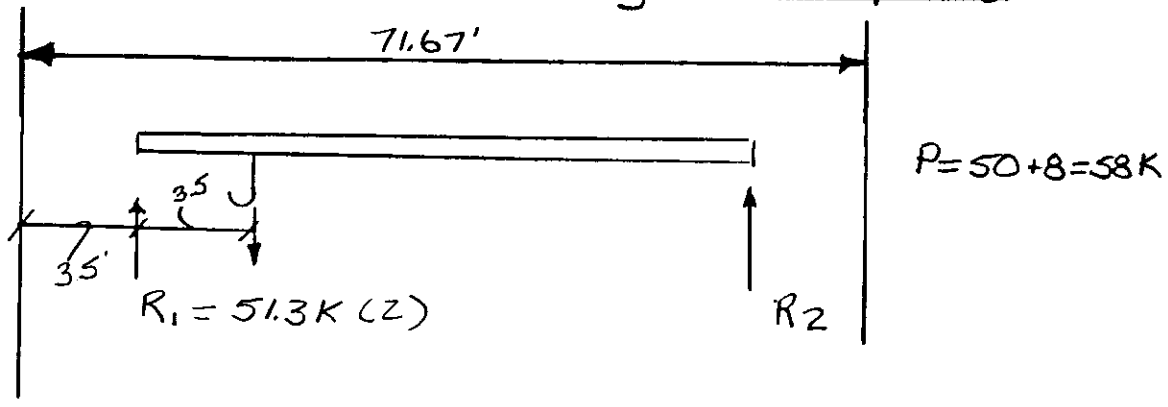


$$R_1 = \frac{61.17}{64.67} \times 58 + W/2 = 51.3 \times 2 = 102.6K$$

$$W = (51.3 \times 2 - 54.86) \times 2 = 95.5\ K$$

$$R_2 = \frac{3.5}{64.67} \times 58 + 1/2(95.5) = 50.9K$$

$P_1$ ℄

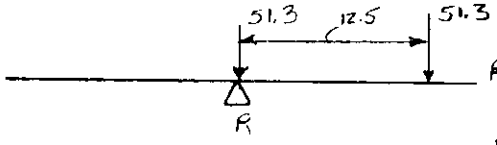


$$R = 51.3 + \frac{51.3(9.58)}{22.08}$$

$$R = 73.56\ K$$

$M$ ℄ $= 73.56\ (3.5 - .83) = 196.4\ 'K$

$P_2$ ℄ $\quad R = 50.9/2 + \dfrac{50.9/2\ (9.58)}{22.08} = 36.5\ K$

$M$ ℄ $\quad 36.5 \times 2.67 = 97.45\ 'K$

Total Lateral Force $= (50/2 + 8).2 = 6.6\ K$

$$P_{1,2}\ ℄ = 6.6 + \frac{6.6(9.58)}{22.08} = 9.46K$$

SUBJECT RTS-Maint.

COMPUTATION Tank Work Area Frame → Crane load Reactions.

COMPUTED BY SAG CHECKED BY DATE 5-19-89

Check Loads on Footings caused by crane loads

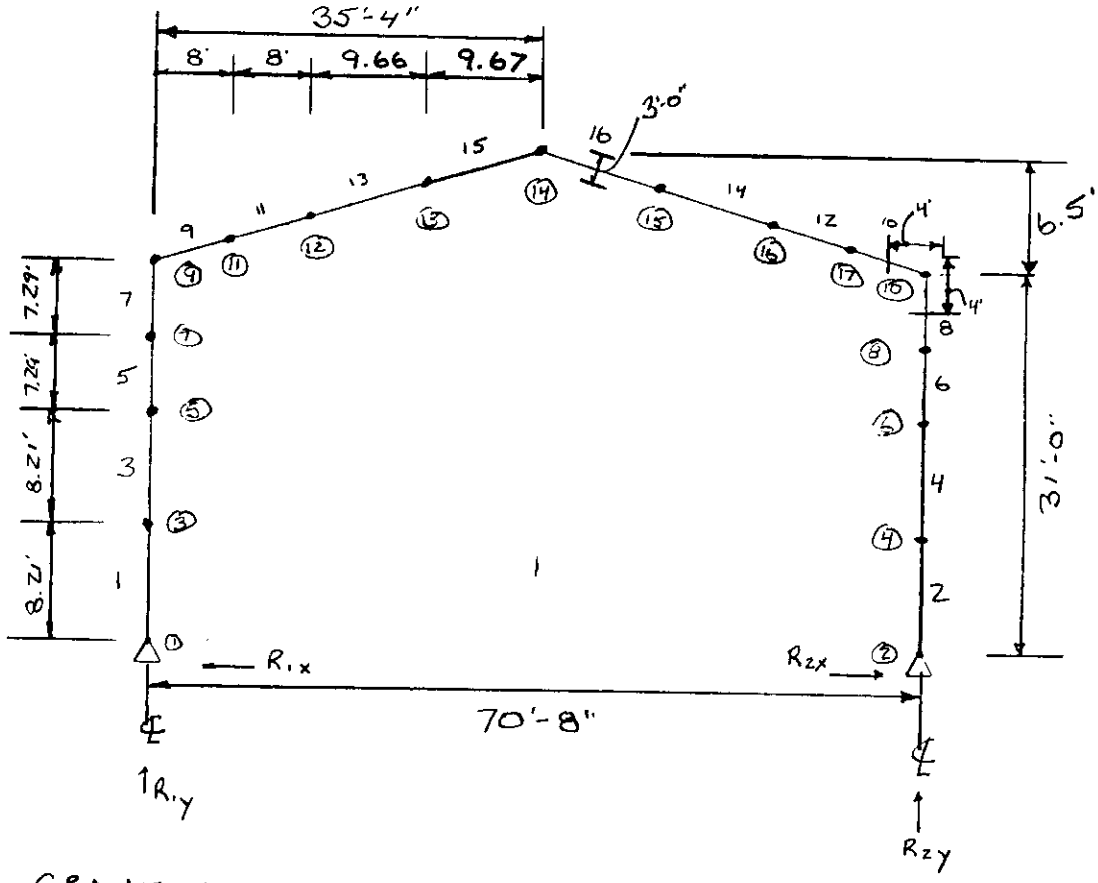


CRANE LOADS

$P_{1\,\ell L}$ @ J5 = 73.56 K↓, $M_{1\,\ell}$ @ J5 = 196.4 'K ↻+

$P_{2\,\ell L}$ @ J6 = 36.5 K↓, $M_{2\,\ell}$ @ J6 = 97.45 'K ↺−

Lateral Load @ J5 or J6 in either direction = 9.46 K ← or →

Results (See Comp Run) * = Crit condition

Load Case 1 (Lat Load → @ J5)

$R_1$ $R_x = -2.91$ K, $R_y = 69.96$ K

$R_2$ $R_x = -6.55$ K, $R_y = 40.10$ K

Load Case 2 (Lat. Load ← @ J5)

* $R_1$ $R_x = 11.02$ K, $R_y = 74.36$ K

$R_2$ $R_x = -1.55$ K, $R_y = 35.7$ K

Load Case 3 (Lat. Load → @ J6)

$R_1$ $R_x = 1.55$ K, $R_y = 69.96$ K

* $R_2$ $R_x = 11.02$ K, $R_y = 40.10$ K

SUBJECT R.T.S. - Maint.

COMPUTATION Tank Work Bay Frames - Dead Load Determination

COMPUTED BY SAG CHECKED BY DATE 5-22-89

# Tank Work Bay Frames

## Mechanical and electrical allowances

Mech. Duct - 4psf
Elect - 1.5psf
5.5 psf

Hung Mechanical equipment to be evaluated separately with respective footings.
(See frame Section)

other Roof loads = Steel Roof Panel
Insul. (6")
Purlins

## Frame Dead loads

Roof Panel assume continuous, $M_{max} = 1/10(w)(l)^2$
Try spacing = 5'-0" o.c.

$SL = 37.8$ psf, $WL = -20.48$ psf

$M_{max} = 1/10(.0378)(5)^2 = .0945$ FT-K
standing Seams, $F_b = 30$ KSI

$S_{xreq} = \frac{.0945 \text{ FT-K}(12)}{30} = .0378 < .07 \text{ IN}^3$ ok

WT = 1.42 lb/ft² (24 GA)

Wall Panel

$WL = -13.31$ psf Try 8'-0" Spacing

$M_{max} = 1/10(.013)(8)^2 = .083$ FT-K

$F_b = 48$ KSI

$S_{xreq} = \frac{.083(12)}{48 \text{ KSI}} = .021 \text{ IN}^3 < .048 \text{ IN}^3$

WT = 1.35 lb/ft² (24 GA.)

SUBJECT RTS. - Maint.

COMPUTATION Tank Work Bay Frames - Dead Load Determination

COMPUTED BY SAG CHECKED BY DATE 5-22-89

Purlins Try 5'-0" Spacing

Roofing - 1.42 psf
Insulation - 1 psf
Mech allow - 5.5 psf
Purlins - 2.0 psf
9.92 x 5' = 49.60 plf

Snow load = 37.8 psf(5') = 189.0 plf
238.6 plf

$$M = \frac{(.2386)(22.08)^2}{10} = 11.63 \text{ FT-K}$$

$$S_{req} = \frac{(11.63 \text{ FT-K})(12)}{33} = 4.23 \text{ IN}^3$$

Use 9.5 Z12 $S_x = 5.14 \text{ IN}^3$, WT = 6.05 lb/FT

Girt Design Try 8' Spacing

WL = 13.31 psf (8') = 106.5 plf

$$M = \frac{(.1065)(22.08)^2}{10} = 5.19 \text{ FT-K}$$

$$S_{x_{req}} = \frac{(5.19 \text{ FT-K})(12)}{33} = 1.89 \text{ IN}^3$$

USE 8 Z16 @ 8'-Spacing wt = 2.90 lb/FT

SUBJECT RTS- Maint.
COMPUTATION Tank Work Bay Frames-Dead Load Determination
COMPUTED BY SAG CHECKED BY DATE 5-22-89

## Roll up door calculation (Typical Frame)

Plywood = 36 pcf, 3/4"

36 pcf(4')(8')(.0625') = 72 lb
72/456 = .158 psf
(say .2)

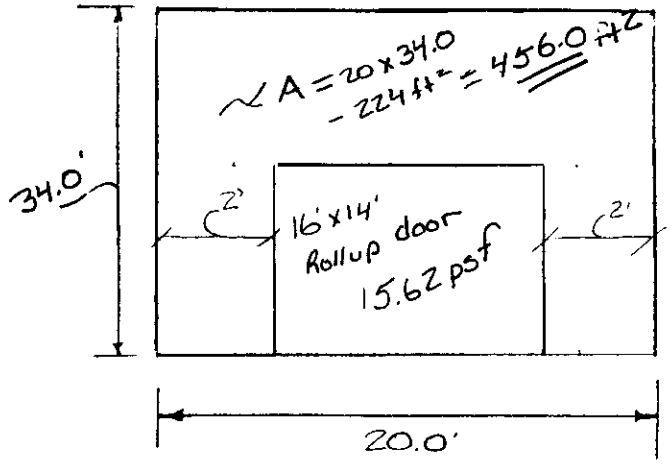


Elevation

$$456.0\,ft^2(.5 + 1.35 + 1.35 + .4\,psf + .2) = 1733.0\ lbs$$

$$\frac{1733.0\ lbs + (16 \times 14 \times 15.62)}{680.0\ ft^2} = \underline{\underline{7.69\ psf}}$$

**Beam Members** — LL = 37.8 psf
Roof DL = $5.5 + 1.42 + 1.2 + 1.0 + \frac{2000}{20 \times 72.75} = 10.5\,psf$

DL + LL = 48.3(20) = 966 lb/FT + beam wt.
(assume 150 lb/FT)

$$M_{max} = \frac{(1.116\ lb/FT)(72.75)^2}{10} = 591\ FT\text{-}K$$

$F_b = .6\,F_y$ $\quad S_{x\,req} = \frac{(591)(12)}{22} = 322.4\ in^3$

$\underline{W30 \times 116\ lb/ft}$

**Column Members** $P = 48.3psf(20)(72.75/2) + 116(72.75/2) = 39.4\ K$
Crane load = 74.36 K + 3.5(.077) + 20(.162) + 20(.02) = 78.3 K $\quad KL = 29.0'$
$\therefore$ W12x58

Dead + Wind: $P_{DEAD} = 10.5(20)(72.75/2) = 7.64\,K$
$P_{wall} = 7.69psf(20)(34) + 3.6 = \underline{8.83\,K}$
16.47 K

$M = (13.51)(34)(20)(29.0') = 262.5\ FT\text{-}K$

Negl. $F_a/F_b \Rightarrow$ W12 $B_x \simeq .227$
$P_{eq} = 16.47 + .227(262.5)(12) = 731.5\,K \Rightarrow \underline{\underline{W12 \times 230}}$

SUBJECT RTS- Maint

COMPUTATION Tank Work Bay Frames, Seismic

COMPUTED BY SAG CHECKED BY DATE 5-22-89

Seismic

$V = ZIKCSW$

$CS_{max} = .14$

$V = 0.14ZIKW$

K = 1.0 for moment resisting frame

K = 1.33 for braced frame (End Frame, lat dir)

K = 1.33 for braced frame (long. dir)

Zone 2 ⟹ Z = 3/8

I = 1.5, Bldg. Cat III

V = Total lateral force or shear at the base in pounds.

W = Total dead loads including collateral loads and partition loads

Included in W = Total dead load + 25% of snow load when snow load exceeds 31 psf

Features : Height, H = 34.0'

B = 72.75'

S = 20'

L = 125.54'

MH = 37.375'

Roof D.L.

| | | |
|---|---|---|
| Rigid Frame | = | 5.8 psf |
| Purlin | = | 1.2 psf |
| Panel | = | 1.42 psf |
| 6" Fiberglass | = | 1.0 psf |
| Mech & Elect | = | 5.5 psf |
| Mech equip | = | 1.4 psf |

Total RDL = 16.32 psf

Wall DL (WDL) (SIDE WALL) = 7.69 psf + 11.5 psf + 5.3 psf = 24.5 psf

Wall DL (End Wall) = 2.9 + 0.5 + 1.35 + 1.35 + .4 + .2 = 6.7 psf

Roof LL (25%) = .25(37.8) = 9.45 psf

SUBJECT RTS- Maint

COMPUTATION Tank Work Bay Frames

COMPUTED BY SAG CHECKED BY DATE 5-23-89

1. Seismic force to Rigid Frame (Reaction @ Footing)

$$W_1 = (B \times S \times RDL) + (H \times S \times WDL \times 2)$$

$$= (72.75 \times 20 \times 25.77) + (34 \times 20 \times 24.5 \times 2)$$

$$= 37,495 + 33,320 = 70,815 \text{ lb} = 70.8 \text{ K}$$

$$V_1 = 0.14(.375)(1)(1.5)(70.8 \text{ K}) = \boxed{5.57 \text{ K}}$$

$$R_1 = R_2 = 5.57/2 = 2.78 \text{K}$$

2. Transverse load End Frame (Reaction @ Footing)

$$W_2 = [W_1 + B \times MH \times WDL]$$

$$W_2 = [70.80 + \frac{72.75 \times 37.375 \times 6.7 \text{ psf}}{1000}] = 89.0 \text{ K}$$

$$V_2 = 0.14(.375)(1)(1.5)(89.0) = \boxed{7.0 \text{ K}}$$

3. Longitudinal load (1/2 Bldg.)

$$W_3 = (L \times B/2 \times RDL) + (B \times MH \times WDL) + (L \times H \times WDL)$$

$$= (125.54 \times 72.75/2 \times 25.77) + (72.75 \times 37.375 \times 6.7) + (125.54 \times 34 \times 24.5)$$

$$= 240,471 \text{ lb} = 240.50 \text{ K}$$

$$V_3 = 0.14(.375)(1)(1.5)(1.33)(240.5 \text{ K})$$

$$\boxed{= 25.20 \text{ K}}$$

# TYPICAL WORK BAY FRAME

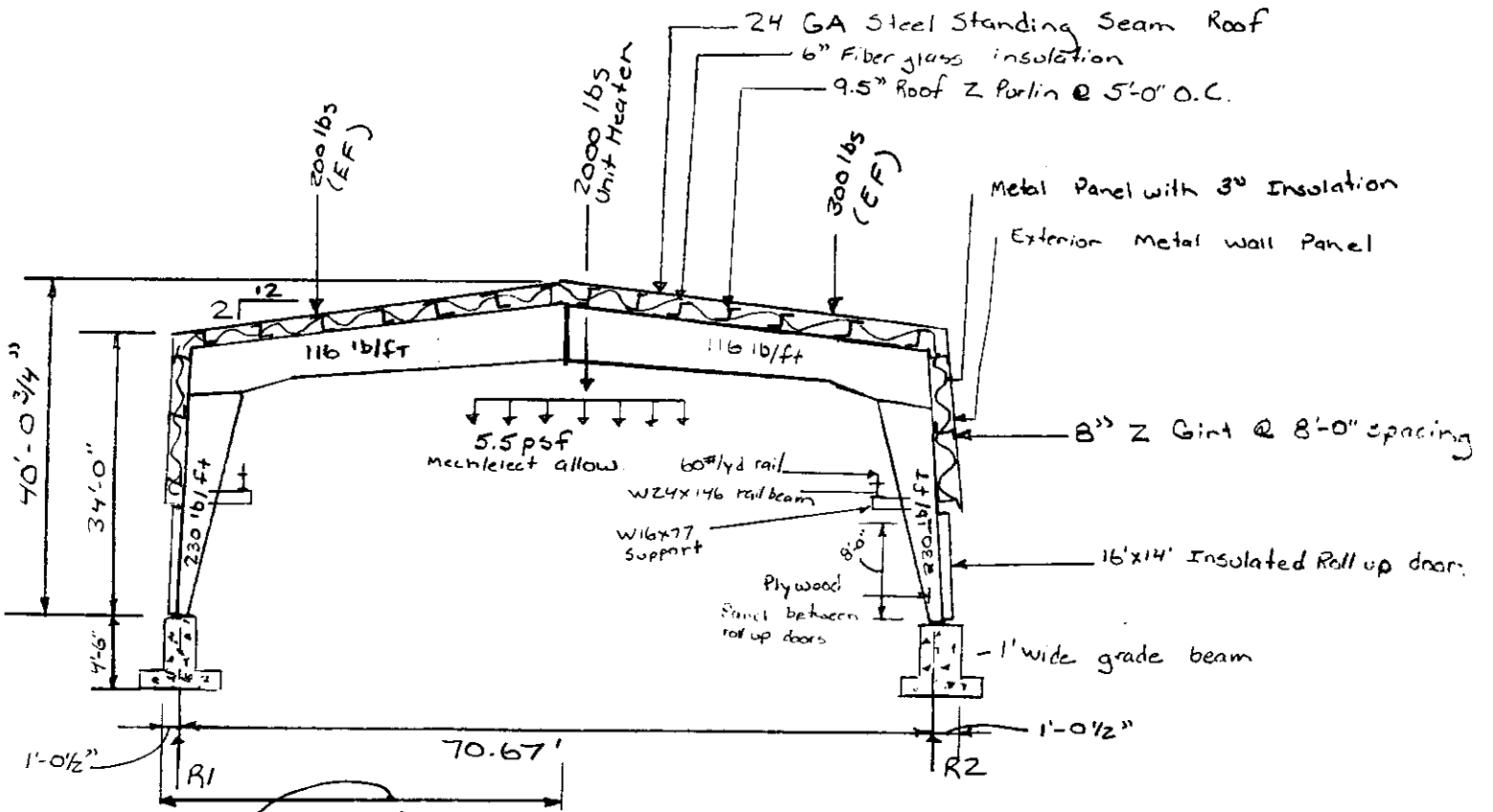


Weights of Frame member are assumed

24 Gage st roof = 1.42 psf
9.5" Roof Purlin, 6.05 lb/ft, 5'-0" spacing = 1.2 psf
6" Fiberglass insulation = 1.0 psf
3" Fiberglass w st panel = 1.35 psf + .5 psf
Arch steel panel = 1.35 psf
8" Z Girt, 2.9 lb/f @ 8'-0" spacing = .4 psf
Plywood Panel, 36 pcf x 3/4"
Roll up doors, 15.6 psf

} 7.69 psf (See Roll up door calc.)

SUBJECT RTS - Maint.

COMPUTATION Tank Work Bay Frames - Dead Load & Live load

COMPUTED BY SAG CHECKED BY DATE 5-23-89

## Calculate Dead Weight Reactions

$R_{1V} = R_{2V}$ , $R_{1H} = R_{2H} = 0$

$$R_{1V} = R_{2V} = (7.69\,psf)(34.0)(20.0) + (1.42 + 1.2 + 1.0 + 5.5\,psf)(36.375)(20)$$
$$+ 2000/2 + 230(29) + 116(36.375) + 60/3(20) + 162(20)$$
$$+ 77(3.5) + [1(4') + 2(1)](20)(150\,lb/ft^3) + 200 + 300/2$$

$$= 5229 + 6635 + 1000 + 6670 + 4220 + 400 + 3240 + 270 + 18{,}000$$

$$= \underline{\underline{45{,}914\ lb.}}$$

## Calculate Live Load Reactions

Frame spacing = 20'-0"

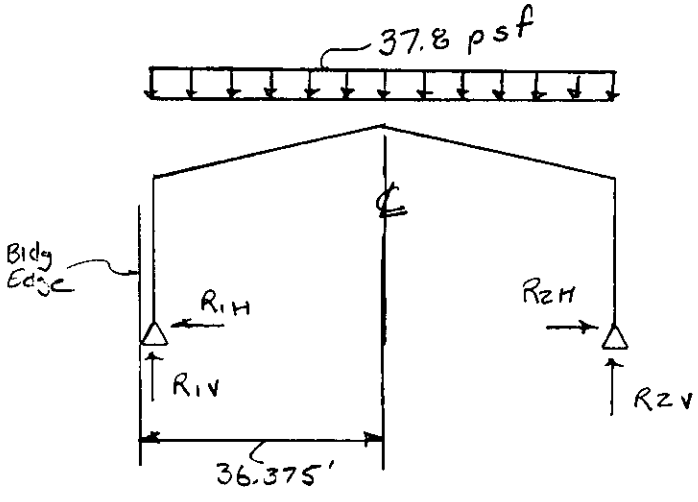


$R_{1H} = R_{2H} = 0$

$$R_{1V} = R_{2V} = 37.8(36.375)(20') = \underline{\underline{27{,}500\ lb}}$$

SUBJECT RTS-Maint.

COMPUTATION Tank Work Bay Frames - Typ. Frame Wind Load

COMPUTED BY SAG CHECKED BY DATE 5-23-89

Maximum Wind load Per MBMA

Typical Frame (Internal + External Summation)

Case I

$\frac{36.375}{\cos 9.46°} = 36.88'$

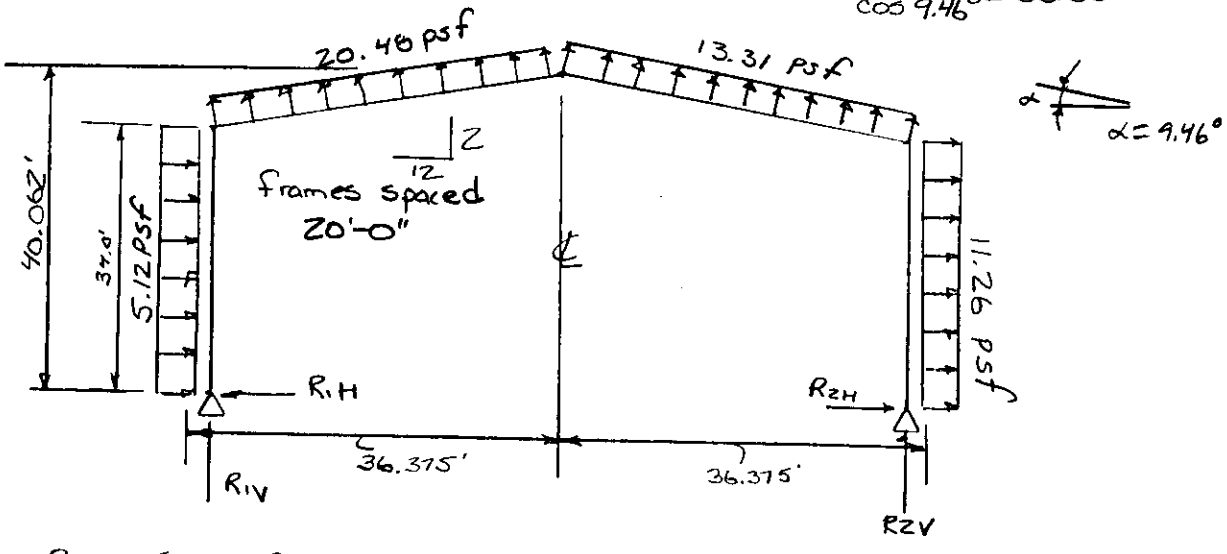


$R_{1H} = 5.12\,psf(34)(20) - (20.48)(36.88)(20)\sin 9.46°$
$= 3,482 - 2483 = \underline{+999\ lbs} \leftarrow$

$R_{2H} = 11.26\,psf(34)(20) + (13.31\,psf)(36.88)(20)\sin 9.46°$
$= 7657 + 1614 = \underline{+9271\ lbs} \leftarrow$

$R_{1V} = (20.48\,psf)(36.88)(20)\cos 9.46° = \underline{14901\ lb} \downarrow$

$R_{2V} = (13.31\,psf)(36.88)(20)\cos 9.46° = \underline{9684\ lb} \downarrow$

Case II

$R_{1H} = 13.31\,psf(34)(20) - (12.29\,psf)(36.88)(20)\sin 9.46°$
$= 9,051 - 1,490 = \underline{+7561\ lbs} \leftarrow$

$R_{2H} = 3.07\,psf(34)(20) + (5.12\,psf)(36.88)(20)\sin 9.46$
$= 2,088 + 621 = \underline{+2709\ lbs} \leftarrow$

$R_{1V} = 12.29\,psf(36.88)(20)\cos 9.46° = \underline{8942\ lbs} \downarrow$

$R_{2V} = (5.12\,psf)(36.88)(20)\cos 9.46 = \underline{3725\ lbs} \downarrow$

SUBJECT RTS-Maint.
COMPUTATION Tank Work Bay Frames - Foundation Design
COMPUTED BY SAG CHECKED BY DATE 5-23-89

Foundations Per Army TM5-818-1

Load Cases per MBMA Criteria

The following load cases are to be investigated:

1. D + S
2. D + A  A = Auxiliary Crane Loads
3. D + W or E
4. D + S + A
5. D + S + E
6. D + .5W (or 1.0 E) + A
7. D + S + .5W
8. D + .5S + W

Loading safety factors

For load cases: 1 D + W
2 D + A
3 D + W
4 D + S + A
5 D + .5W + A
7 D + S + .5W
8 D + .5S + W

A minimum factor of safety of 2.0 was used.

For load cases: 3 D + E
5 D + S + E
6 D + 1.0E + A

A minimum factor of safety of 1.5 was used

The following Frame cases were investigated for the Tank Work Bay area.

1. Typical Tank Bay Frame - 1D
2. 1ST Interior Work Bay Frame - 1D
3. End Frames - Transverse Dir. - 1D
4. End Walls & Longitudinal Loads - 2D
   The critical end wall will be checked for Biaxial Loading (2D). The critical main frame (1ST interior) will be checked for Biaxial loading (2D) due to longitudinal Wind and Seismic transmitted forces.

SUBJECT RTS-Maint.
COMPUTATION Footing Stability Analysis
COMPUTED BY SAG CHECKED BY DATE 5-24-89

Required : Perform Bearing Capacity Analysis of Footings in Accordance with Methods Presented in TM5-818-1. Reference Figure 6-4, Page 6-6.

Footing A (Exterior Footing) Typical Tank Bay Frame

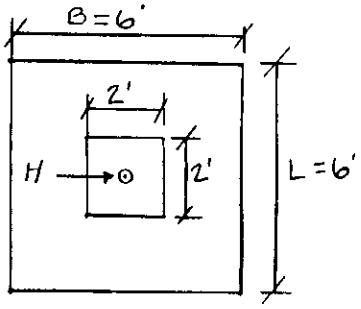


PLAN

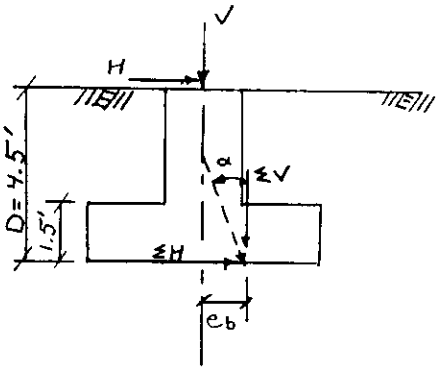


SECTION

Soil Parameters :
$\gamma_{moist} = 125$ PCF

$\phi = 30°$

$c = 0$

Groundwater below bottom of footing

Effective Wt. of Soil above Base = $(6)(6)(4.5)(125/1000) = 20.25^K$

Wt. of Conc. in Excess of Displaced Soil

$$\frac{[(6)(6)(1.5)+(2)(2)(3)](150-125)}{1000}$$

$= 1.65^K$

$$q_u = \gamma D N_q (1-\alpha/90°)^2 + 0.4\gamma B' N_\gamma (1-\alpha/\phi)^2$$

For $\phi = 30°$, $N_q = N_\gamma = 17$

1. LOAD CASE : DEAD + SNOW $V = 45.9 + 27.5 = 73.4^K, H=0$

$\Sigma V = 73.4 + 20.25 + 1.65 = 95.3^K$

$q_a = 95.3/(6)(6) = 2.65$ KSF (Actual Bearing Pressure)

$$q_u = \frac{(125)(4.5)(17) + 0.4(125)(6)(17)}{1000} = 14.66 \text{ KSF (Ultimate Pressure)}$$

Factor of Safety $= q_u/q_a = 14.66\text{ KSF}/2.65 = 5.53 > 2.0$ OK

SUBJECT RTS -Maint
COMPUTATION Footing Stability Analysis
COMPUTED BY SAB CHECKED BY DATE 5-24-89

Footing A (cont.)

2. LOAD CASE : DEAD + Auxiliary (LC#3, R2)

$\Sigma H = 11.02K$

$\Sigma V = 45.9 + 40.10 + 20.25 + 1.65 = 107.9K$

$eb = \Sigma M / \Sigma V = 11.02(4.5)/107.9 = .46'$

$B' = B - 2eb = 6 - 2(.46) = 5.08'$

$\alpha = ARCTAN(\Sigma H / \Sigma V) = ARCTAN(11.02/107.9) = 5.83°$

$q_a = \Sigma V / B'L = 107.9 / 5.08(6) = 3.54 \text{ KSF}$

$$q_u = \frac{125(4.5)(17)(1 - 5.83/90)^2 + 0.4(125)(5.08)(17)(1 - 5.83/30)^2}{1000}$$

$q_u = 11.16 \text{ KSF}$

$FS = 11.16\text{KSF} / 3.54 = 3.15 > 2.0$ ok

Check LC # 2, R1

Footing A (continued)

2. LOAD CASE: DEAD + Auxiliary (LC #2, $R_1$ critical)

$\Sigma H = 11.02$ K

$V = 45.9 + 74.36 = 120.3$ K, $\Sigma V = 120.3 + 20.25 + 1.65 = 142.2$ K

$e_b = \Sigma M / \Sigma V = 11.02(4.5)/142.2 = 0.35'$

B' = Effective Base Width

$B' = B - 2e_b = 6 - 2(.35) = 5.30'$

$\alpha = \text{ARCTAN}(\Sigma H/\Sigma V) = \text{ARCTAN}(11.02/142.2) = 4.43°$

$q_a = \Sigma V / B'L = 142.2/(5.3)(6) = 4.47$ KSF

$$q_u = \frac{125(4.5)(17)(1 - 4.43/90)^2 + 0.4(125)(5.30)(17)(1 - 4.43/30)^2}{1000}$$

$q_u = 11.92$ KSF

F.S. $= 11.92/4.47 = \underline{2.67 > 2.0}$ ok

3. LOAD CASE: DEAD + WIND or E

Wind LOAD CASE 1 * Critical Case

$R_{1H} = 999$ lbs $R_{2H} = 9271$ lbs $= 9.271$K

$R_{1V} = 45{,}914 - 14901 = 31{,}013$ lbs $= 31.0$ K

$R_{2V} = 45{,}914 - 9684 = 36{,}230$ lbs $= 36.2$ K

Check R2 $\Sigma V = 36.2 + 20.25 + 1.65 = 58.1$, $\Sigma H = 9.271$

$e_b = 9.271(4.5)/58.1 = .72$

$B' = 6 - 2(.72) = 4.56'$

$\alpha = \text{ARCTAN}(9.271/58.1) = 9.07°$

$q_a = \Sigma V / B'L = 58.1/4.56(6) = 2.12$ KSF

$$q_u = \frac{125(4.5)(17)(1 - 9.07/90)^2 + 0.4(125)(4.56)(17)(1 - 9.07/30)^2}{1000}$$

$q_u = 9.62$ KSF

FS $= 9.62/2.12$ KSF $= 4.54 > 2.0$ ok.

SUBJECT RTS-Maint.
COMPUTATION Footing Stability Analysis
COMPUTED BY SAG CHECKED BY DATE 5-24-89

LOAD CASE: DEAD + WIND (CONT.)
WIND LOAD CASE 2

$R_{1H} = 7.56\,K$, $R_{2H} = 2.71\,K$
$R_{1V} = 45.9 - 8.942 = 36.96\,K$
$R_{2V} = 45.9 - 3.725 = 42.17\,K$

Check R1 $\Sigma V = 36.96 + 20.25 + 1.65 = 58.86^K$, $\Sigma H = 7.56\,K$

$eb = 7.56(4.5)/58.86 = .58$

$B' = 6 - 2(.58) = 4.84'$

$\alpha = \text{ARCTAN}(7.56/58.86) = 7.32$

$q_a = \Sigma V/B'L = 58.86/4.84(6) = 2.03\ KSF$

$$q_u = \frac{125(4.5)(17)(1 - 7.32/90)^2 + 0.4(125)(4.84)(17)(1 - 7.32/30)^2}{1000}$$

$q_u = 10.42\ KSF$

$F.S. = 10.42/2.03 = 5.13 > 2.0$ OK

Check DEAD + EARTHQUAKE
$R_V = 45.9$, $R_H = 2.78\,K$
$\Sigma V = 45.9 + 20.25 + 1.65 = 67.8\,K$, $\Sigma H = 2.78\,K$

$eb = 2.78(4.5)/67.8 = .184$

$B' = 6 - 2(.184) = 5.63$

$\alpha = \text{ARCTAN}(2.78/67.8) = 2.35°$

$q_a = 67.8/5.63(6) = 2.0\ KSF$

$$q_u = \frac{(125)(4.5)(17)(1 - 2.35/90)^2 + 0.4(125)(5.63)(17)(1 - 2.35/30)^2}{1000}$$

$q_u = 13.13\ KSF$

$F.S. = 13.13/2.0 = 6.57 > 1.5$ OK

SUBJECT RTS-Maint.

COMPUTATION Foot Stability Analysis

COMPUTED BY SAG CHECKED BY DATE 5-24-69

4. LOAD CASE: DEAD + SNOW + A
(Roof SNOW LOAD = .75S when greater than 31 psf)

$V = 45.9 + .75(27.5) + 74.36 = 140.89$

$\Sigma V = 140.89 + 20.25 + 1.65 = 162.8\ K$

$\Sigma H = 11.02K$

$eb = \Sigma M / \Sigma V = 11.02(4.5)/162.8 = .305$

$B' = 6 - 2(.305) = 5.39$

$\alpha = ARCTAN(11.02/162.8) = 3.87°$

$q_a = 162.8/5.39(6) = 5.03\ KSF$

$$q_u = \frac{125(4.5)(17)(1 - 3.87/90)^2 + 0.4(125)(5.39)(17)(1 - 3.87/30)^2}{1000}$$

$q_u = 12.23\ KSF$

$F.S. = \frac{12.23\ KSF}{5.03\ KSF} = 2.43 > 2.0$ o.k.

5. LOAD CASE: DEAD + SNOW + EARTHQUAKE
(use .25S when snow load > 31 psf)

$V = 45.9 + .25(27.5) = 52.77\ K$, $H = 2.78K$

$\Sigma V = 52.77 + 20.25 + 1.65 = 74.67K$, $\Sigma H = 2.78K$

$eb = \Sigma M / \Sigma V = 2.78(4.5)/74.67 = .17$

$B' = 6 - 2(.17) = 5.66'$

$\alpha = ARCTAN(2.78/74.67) = 2.13°$

$q_a = 74.67/5.66(6) = 2.20\ KSF$

$$q_u = \frac{125(4.5)(17)(1 - 2.13/90)^2 + 0.4(125)(5.66)(17)(1 - 2.13/30)^2}{1000}$$

$= 13.27\ KSF$

$F.S. = 13.27KSF/2.20\ KSF = 6.03 > 1.50K$

SUBJECT RTS- Maint

COMPUTATION Tank Work Bay Frames - Footing Stability Analysis

COMPUTED BY SAG CHECKED BY DATE 5-24-89

6. LOAD CASE: DEAD + .5WIND (or 1.0E) + Auxiliary

$.5W = .5(9.271) = 4.63\ K$
$1.0E = 2.78K$

Check RZ

$\Sigma V = 45.9 - .5(9.684) + 74.36 = 115.42K + 20.25 + 1.65 = 137.32K$
$\Sigma H = 4.63K + 11.02\ K = 15.65K$

$eb = 15.65(4.5)/137.32 = .51$

$B' = 6 - 2(.51) = 4.98$

$\alpha = ARCTAN(15.65/137.32) = 6.5°$

$q_a = 137.32/4.98(6) = 4.60\ KSF$

$$q_u = \frac{(125)(4.5)(17)(1 - 6.5/90)^2 + 0.4(125)(4.98)(17)(1 - 6.5/130)^2}{1000}$$

$q_u = 10.83\ KSF$

$FS = 10.83\ KSF / 4.60 = 2.35 > 2.0$ OK

7. LOAD CASE: DEAD + SNOW + .5WIND
Check RZ

$V = 73.4 - .5(9.684) = 68.56\ K$
$\Sigma V = 68.56 + 20.25 + 1.65 = 90.46K$, $\Sigma H = 4.63K$

$eb = 4.63(4.5)/90.46 = .23$

$B' = 6 - 2(.23) = 5.54$

$\alpha = ARCTAN(4.63/90.46) = 2.93°$

$q_a = 90.46/5.54(6) = 2.72\ KSF$

$$q_u = \frac{(125)(4.5)(17)(1 - 2.93/90)^2 + 0.4(125)(5.54)(17)(1 - 2.93/130)^2}{1000}$$

$= 12.78\ KSF$

$FS = 12.78/2.72 = 4.70 > 2.0$ OK

SUBJECT RTS-Maint.

COMPUTATION Tank Work Bay Frames

COMPUTED BY SAG CHECKED BY DATE 5-24-89

8. LOAD CASE: DEAD + .5 SNOW + WIND

$V = 45.9 + .5(27.5) - 9.684 = 49.97\ K$
$H = 9.27\ K$

$\Sigma V = 49.97 + 20.25 + 1.65 = 71.87\ K$
$\Sigma H = 9.27 K$

$eb = 9.27(4.5)/71.87 = .58$

$B' = 6 - 2(.58) = 4.84$

$\alpha = ARCTAN(9.27/71.87) = 7.35°$

$q_a = 71.87/4.84(6) = 2.47\ KSF$

$$q_{ult} = \frac{125(4.5)(17)(1 - 7.35/90)^2 + 0.4(125)(4.84)(17)(1 - 7.35/30)^2}{1000}$$

$= 10.41\ KSF$

$FS = 10.41\ KSF / 2.47\ KSF = 4.21 > 2.0$ OK

SUBJECT RTS-Maint

COMPUTATION Tank Work Bay Frame

COMPUTED BY SAG CHECKED BY DATE 5-25-89

Check 1st Interior Work Bay Frame (Spacing = 21.04)

1. Dead Weight Reactions

$R_{1V} = R_{2V}, \quad R_{1H} = R_{2H} = 0$

$$R_{1V} = R_{2V} = (7.69\ psf)(34.0)(21.04) + (1.42 + 1.2 + 1.0 + 5.5\ psf)(36.375)(21.04') + 2000/2 + (200+300)/2 + 230(29) + 116(36.375) + 60/3(21.04) + 162(21.04) + 77(3.5) + [1(4') + 2(1)](21.04)(150\ lb/ft^3)$$

$$= 5501 + 6980 + 1000 + 250 + 6670 + 4219 + 421 + 3408 + 270 + 18{,}936$$

$$= \underline{\underline{47{,}655\ lb.}}$$

2. Calculate Live Load Reactions

$R_{1H} = R_{2H} = 0$

$R_{1V} = R_{2V} = 37.8\ psf\ (36.375)(21.04') = \underline{28{,}929\ lb}$

3. WIND LOADS

Case I

$R_{1H} = 5.12\ psf(34)(21.04) - (20.48)(36.88)(21.04)\sin 9.46°$
$= 3663 - 2612 = \underline{+1051\ lbs}$

$R_{2H} = (11.26)(34)(21.04) + (13.31)(36.88)(21.04)\sin 9.46°$
$= 8055 + 1697 = \underline{+9752\ lbs}$

$R_{1V} = (20.48\ psf)(36.88)(21.04)\cos 9.46° = \underline{15{,}675\ lb \downarrow}$

$R_{2V} = (13.31\ psf)(36.88)(21.04)\cos 9.46° = \underline{\underline{10{,}188\ lb \downarrow}}$

Case II

$R_{1H} = 13.31\ psf(34)(21.04) - (12.29)(36.88)(21.04)\sin 9.46°$
$= 9521 - 1567 = \underline{+7954\ lbs}$

$R_{2H} = (3.07\ psf)(34)(21.04) + (5.12\ psf)(36.88)(21.04)\sin 9.46° = \underline{+2849}$

$R_{1V} = (12.29\ psf)(36.88)(21.04)\cos 9.46° = \underline{9407\ lbs}$
$R_{2V} = (5.12\ psf)(36.88)(21.04)\cos 9.46° = \underline{3919\ lbs}$

SUBJECT RTS - Maint

COMPUTATION Tank Work Bay Frame - Footing Stability Analysis

COMPUTED BY SAG CHECKED BY DATE 5-25-89

From Previous Calculations the critical load cases to be investigated are: 2. DEAD + Auxiliary
4. DEAD + SNOW + A
6. DEAD + .5WIND + A

Required: Perform Bearing Capacity Analysis for 1st interior frame.

2. LOAD CASE: DEAD + Auxiliary

$\Sigma H = 11.02$ K

$V = 47.66 + 74.36 = 122.02$ K, $\Sigma V = 122.02 + 20.25 + 1.65 = 143.92$

$e_b = \Sigma M / \Sigma V = 11.02(4.5)/143.92 = .344$

$B' = B - 2e_b = 6 - 2(.344) = 5.31'$

$\alpha = ARCTAN(\Sigma H / \Sigma V) = ARCTAN(11.02/143.92) = 4.39°$

$q_a = \Sigma V / B'L = 143.92/5.31(6) = 4.52$ KSF

$$q_u = \frac{(125)(4.5)(17)(1 - 4.39/90)^2 + 0.4(125)(5.31)(17)(1 - 4.39/90)^2}{1000}$$

$q_u = 11.94$ KSF

$F.S. = 11.94/4.52 = 2.64 > 2.0$ ok

SUBJECT RTS-Maint.
COMPUTATION Tank Work Bay Frame - Footing Stability Analysis
COMPUTED BY SAG CHECKED BY DATE 5-25-89

4. DEAD + SNOW + A (Snow load = .75 S, when greater than 3/pf)

$\Sigma H = 11.02K$

$V = 47.66 + .75(28.93) + 74.36 = 143.72 K$
$\Sigma V = 143.72 + 20.25 + 1.65 = 165.62 K$

$e_b = \Sigma M / \Sigma V = 11.02(4.5)/165.62 = .299$

$B' = 6 - 2(.299) = 5.40$

$\alpha = ARCTAN(11.02/165.62) = 3.81°$

$q_a = 165.62/(5.4)(6) = 5.11$ KSF

$$q_u = \frac{(125)(4.5)(17)(1 - 3.81/90)^2 + 0.4(125)(5.40)(17)(1 - 3.81/30)^2}{1000}$$

$q_u = 12.27$ KSF

$FS = 12.27/5.11 = 2.40 > 2.0$ ok

6. DEAD + .5 WIND + A
@ R2 $.5(9.752) = 4.88K$

$\Sigma V = 47.66 - .5(10.19) + 74.36 = 116.92 + 20.25 + 1.65 = 138.82$
$\Sigma H = 4.88 + 11.02 = 15.9K$

$e_b = 15.9(4.5)/138.82 = .515$

$B' = 6 - 2(.515) = 4.97'$

$\alpha = ARCTAN(15.9/138.82) = 6.53°$

$q_a = 138.82/(6)(4.97) = 4.66$ KSF

$$q_u = \frac{(125)(4.5)(17)(1 - 6.53/90)^2 + 0.4(125)(4.97)(17)(1 - 6.53/30)^2}{1000}$$

$q_u = 10.81$ KSF

$FS = 10.81/4.66 = 2.32 > 2.0$ ok

SUBJECT RTS- Maint.

COMPUTATION Foundation Design

COMPUTED BY JAG CHECKED BY DATE 5-30-88

Check End Frame - Transverse Direction

Wind Reactions (See Wind load Calcs. for forces)

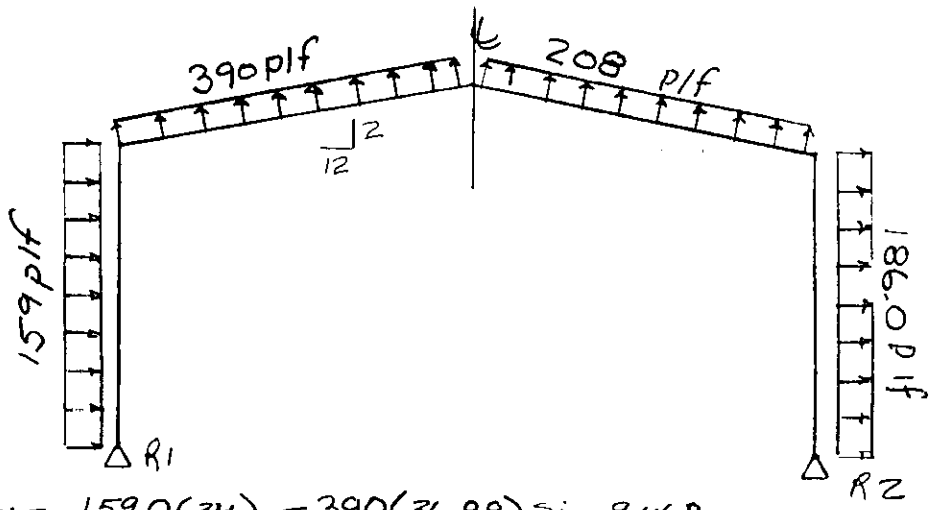


$R_{1H} = 159.0(34) - 390(36.88)\sin 9.46°$

$= 5406 - 2364 = \underline{3042 \text{ lbs}}$ ←

$R_{2H} = 186(34) + 208(36.88)\sin 9.46°$

$= \underline{7585 \text{ lbs}}$ ←

$R_{1V} = 390(36.88)\cos 9.46° = \underline{14,188 \text{ lb.}}$

$R_{2V} = 208(36.88)\cos 9.46° = \underline{7,567 \text{ lb.}}$

DEAD LOAD REACTIONS $R_{1V} = R_{2V}$

$R_{1V} = R_{2V} = 7.69\text{psf}(34)(22.088/2) + 3.8\text{psf}(34.80)(17.33/2)$
$+ (1.42 + 1.2 + 1.0 + 5.5)(36.375)(22.088/2) + 2000/2$
$+ 230(29) + 116(36.375) + 60/3(22.088/2)$
$+ 162(22.088/2) + 77(3.5)$
$+ [1(4) + 2(1)](22.083/2 + 17.33/2)150$

$= 2887 + 1146 + 6670 + 4220 + 221 + 1789 + 270 + 17,236$

$= \underline{\underline{34,939 \text{ lb.}}}$

Check Load Cases: D+W

&

D+.5W+A (critical Combination)

SUBJECT RTS-Maint
COMPUTATION Foundation Design
COMPUTED BY SAG CHECKED BY DATE 5-30-88

Check LOAD CASE: O+W

R1

$\Sigma H = 3.04\ K$
$V = 34,939 - 14,188 = 20,751$ lb or $20.75\ K$
$\Sigma V = 20.75\ K + 20.25 + 1.65 = 42.65\ K$

$e_b = \Sigma M / \Sigma V = 3.04(4.5)/42.65 = .32'$

$B' = B - 2e_b = 6 - 2(.32) = 5.36'$

$\alpha = ARCTAN(\Sigma H / \Sigma V) = ARCTAN(3.04/42.65) = 4.09°$

$q_a = \Sigma V / B'L = 42.65/(5.36)(6) = 1.33\ KSF$

$$q_u = \frac{125(4.5)(17)(1 - 4.09/90)^2 + .4(125)(5.36)(17)(1 - 4.09/30)^2}{1000}$$

$q_u = 12.11\ KSF$

$F.S. = 12.11/1.33 = 9.10 > 2.0$ OK

R2

$\Sigma H = 7.58\ K$
$V = 34,939 - 7567 = 27,372$ lbs or $27.4\ K$
$\Sigma V = 27.4\ K + 20.25 + 1.65 = 49.30\ K$

$e_b = 7.58(4.5)/49.3 = .692$

$B' = B - 2e_b = 6 - 2(.692) = 4.62'$

$\alpha = ARCTAN(7.58/49.3) = 8.74°$

$q_a = \Sigma V / B'L = 49.30/4.62(6) = 1.78\ KSF$

$$q_u = \frac{(125)(4.5)(17)(1 - 8.74/90)^2 + .4(125)(4.62)(17)(1 - 8.74/30)^2}{1000}$$

$q_u = 9.77\ KSF$

$F.S. = 9.77/1.78 = 5.49 > 2.0$ OK

SUBJECT RTS - Maint
COMPUTATION Foundation Design
COMPUTED BY SAG CHECKED BY DATE 5-30-89

LOAD CASE: D + .5W + A

$.5W = 7.58(.5) = 3.79K$

$V = 34.94 - .5(7.57) + 74.36 = 105.52\ K$

$\Sigma V = 105.52 + 20.25 + 1.65 = 127.42K$

$\Sigma H = 3.79K + 11.02K = 14.81K$

$e_b = 14.81(4.5)/127.42 = .52$

$B' = 6 - 2(.52) = 4.96'$

$\alpha = ARCTAN(14.81/127.42) = 6.63°$

$q_a = 127.42/4.96(6) = 4.28\ KSF$

$$q_u = \frac{(125)(4.5)(17)(1 - 6.63/90)^2 + 0.4(125)(4.96)(17)(1 - 6.63/90)^2}{1000}$$

$= 10.76\ KSF$

$FS = 10.76\ KSF / 4.28 = 2.51 > 2.0$ ok

SUBJECT RTS- Maint.

COMPUTATION Foundation Design

COMPUTED BY SAG CHECKED BY DATE 5-30-89

## Check End Walls & Longitudinal Loads

END WALL

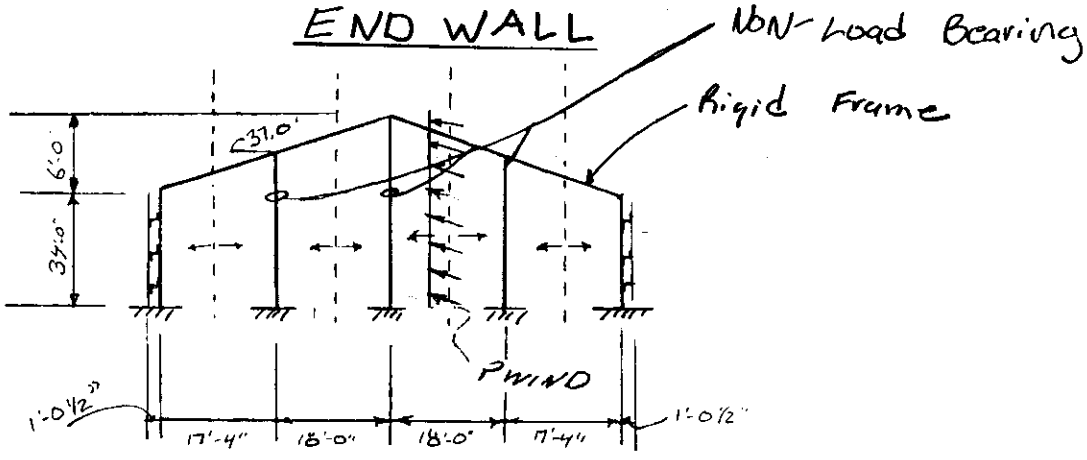


CASE II Critical

Wind Load on Center Column (Center footing)

$(13.31\ psf)(40/2)(18') = \underline{\underline{4792\ lbs.}}$

Wind load on end frame column.

$18.43\ psf(34.8/2)(9.665) = \underline{\underline{3099\ lbs.}}$

* Wind load on 1st interior column.

$[18.43\ psf(11.33) + 13.31\ psf(6.33)]\ 37/2 = \underline{\underline{5422\ lbs.}}$

* Critical for end wall

Determine dead load on 1st interior column (END WALL)

DL = 17.66'(37')(3.8 psf) + 53(37') + [1(4)+2(1)]13.66[150]
= 16,738 lbs or 16.74 kips

Seismic load = (17.66')(37)(67) = 4378 lb.
V = .14(.375)(1)(1.5)(1.33)(4.378K) = .46 K

Main frame footing (Longitudinal load)
LOAD TO EACH WIND CROSS BRACING

37.375/2 [18.43 psf x 20 + 13.31 x 16.375] = 10,961 lb

load to each Footing = 10,961 lb / 2 = 5480 lb

Seismic (longitudinal load to main frame)

Assume the complete load is taken by the vertical Cross framing ( V3 = 25.2 K)

load to each footing = 25.2K / 2 = 12.6 K

End Wall Footing Stability

- assume 1/2 the horizontal wind force is transmitted to the end wall Vt. framing. Vertical wind force is assumed to be taken by the rigid frame footings.

From R1 - 159 (34/2) - 390(36.88) Sin 9.46° = 339 lbs.

From R2 - 186 (34/2) + 208(36.88) Sin 9.46° = 4423 lbs

4423/2 = 2211.5 lbs 339/2 = 169.5

Col line -2 = R = 2211.5 lbs.
col line -4 = R = 2211.5 + 169.5 = 2381 lbs.
Col line -6 = R = 169.5 lbs.

SUBJECT RTS-Maint - TANK Repair Area
COMPUTATION Foundation Design
COMPUTED BY SAG CHECKED BY DATE 6-1-89

## Check End Wall Footings (TANK Repair Area) Biaxial Loading

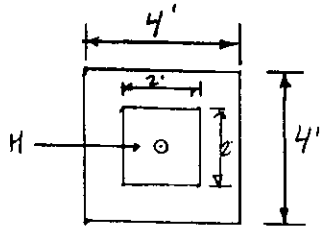


Plan

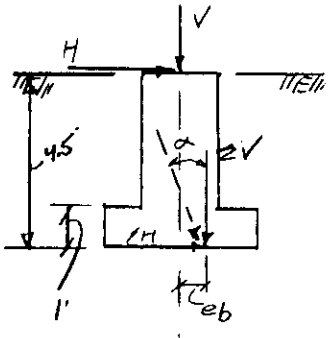


Effective Wt. of Soil above Base
$= 4(4)(4.5)(125/1000) = 9.0\ K$

Wt of Conc. in Excess of Displaced Soil

$$\frac{[4(4)(1.0)+(2)(2)(3.5)](150-125)}{1000}$$

$= .75K$

For $\phi = 30°$, $N_q = N_\gamma = 17$

Note: Column is not load bearing

The Following Load Cases do not apply or are not critical to the design: 1.- D+S, 2.- D+A, 4.-D+S+A, 5.- D+S+E, 6.- D+.5W+A, 7.-D+S+.5W, 8.- D+.5S+W

### 3. LOAD CASE: D+ W or E

Check 1st interior col.

$DL = 16.74$ Kips
$WL_b = 5.42$ Kips, $WL_y = 2.2$ Kips
$E = .46\ K$ (Not critical)

$\Sigma V = 16.74 + 9.0 + .75 = 26.5\ K$
$\Sigma H_b = 5.42$ Kips, $\Sigma H_y = 2.2$ Kips

$e_b = 5.42(4.5)/26.5 = .92K$, $e_y = 2.2(4.5)/26.5 = .373'$

$B' = B - 2e_b = 4 - 2(.92) = 2.16$, $y' = 4 - 2(.373) = 3.25'$

$H = \sqrt{(5.42)^2 + (2.2)^2} = 5.85\ K$

$\alpha = ARCTAN(\Sigma H/\Sigma V) = ARCTAN(5.85/26.5) = 12.45°$

$q_a = \Sigma V/B'L' = 26.5/2.16(3.25) = 3.77$ KSF

$$q_u = \frac{125(4.5)(17)(1-12.45/90)^2 + 0.4(125)(2.16)(17)(1-12.45/30)^2}{1000}$$

$= 7.73$ KSF $FS = 7.73/3.77 = \underline{2.05\ 72.0\ ok}$

# Biaxial Loading To Main Frame (2D)

due to longitudinal Wind and Seismic Loads

(Check 1ST interior side wall footing)

Load Case : DEAD + SNOW - NOT Critical

Load Case : DEAD + A - NOT critical

Load case : DEAD + W or E

DEAD + WIND

$\Sigma V = 47.66 - 10.19 + 20.25 + 1.65 = 59.37\,K$

$\Sigma H_b = 9.75\,K$

$e_b = 9.75(4.5)/59.37 = .740'$, $B' = 6 - 2(.74) = 4.52'$

$\Sigma H_y = 5.5\,K$

$e_y = 5.5(4.5)/59.37 = .417'$, $y' = 6' - 2(.417) = 5.17'$

$\Sigma H = \sqrt{(9.75)^2 + (5.5)^2} = 11.2\,K$

$\alpha = \text{ARCTAN}(11.2/59.37) = 10.68°$

$$q_a = 59.37K / (4.52)(5.17) = 2.54\ KSF$$

$$q_u = \frac{125(4.5)(17)(1 - 10.68/40)^2 + 0.4(125)(4.52)(17)(1 - 10.68/30)^2}{1000}$$

$q_u = 9.02\ KSF$

$F.S. = 9.02\,KSF / 2.54 = 3.55 > 2.0$

SUBJECT RTS - Maint.

COMPUTATION Foundation Design - Biaxial Loading

COMPUTED BY SAG CHECKED BY DATE 6-1-89

DEAD + SEISMIC Longitudinal Direction

$\Sigma V = 47.66 + 20.25 + 1.65 = 69.56$ K

$\Sigma H_y = 12.6$ K $\quad e_y = 12.6(4.5)/69.56 = .815'$

$y' = 6 - 2(.815) = 4.37'$

$\alpha = \text{ARCTAN}(12.6/69.56) = 10.26°$

$q_a = 69.56/(4.37)(6) = 2.65$ KSF

$$q_u = \frac{125(4.5)(17)(1 - 10.26/90)^2 + 0.4(125)(4.37)(17)(1 - 10.26/30)^2}{1000}$$

$= 9.11$ KSF

$FS = 9.11 \text{ KSF} / 2.65 \text{ KSF} = 3.44 > 2.0$ OK

LOAD CASE : DEAD + .5 WIND + A

From 1-D Analysis $\Rightarrow$ $\Sigma V = 138.82$ K
$\Sigma H = 15.9$ K
$e_b = .515$
$B' = 4.97'$

$\Sigma H_y = .5(5480) = 2740$ lbs. $= 2.74$K

Conservatively add longitudinal crane load $= .1(51.3K) = 5.13K$

$\Sigma H_y = 2.74 + 5.13 = 7.87$ K

$e_y = 7.87(4.5)/138.82 = .255$

$y' = 6 - 2(.255) = 5.49'$

$\Sigma H = \sqrt{(15.9)^2 + (7.87)^2} = 17.74$K

$\alpha = \text{ARCTAN}(17.74/138.82) = 7.28°$

$q_a = 138.82/(4.97)(5.49) = 5.09$ KSF

$$q_u = \frac{125(4.5)(17)(1 - 7.28/90)^2 + 0.4(125)(4.97)(17)(1 - 7.28/30)^2}{1000}$$

$q_u = 10.5$ KSF $\quad FS = 10.5/5.09 = 2.06 > 2.0$ OK

SUBJECT RTS - Maint.

COMPUTATION Foundation Design - Biaxial Loading

COMPUTED BY SAG CHECKED BY DATE 6-2-89

LOAD CASE : DEAD + 1.0E + A

For this Case Total crane weight is used only

$\Sigma V = 47.66 + 74.36 + 20.25 + 1.65 = \underline{143.92K}$

$\Sigma H_y = 12.6K$

$e_y = 12.6(4.5)/143.92 = .394'$

$y' = 6' - 2(.394) = 5.21'$

$\alpha = ARCTAN(12.6/143.92) = 5.0°$

$q_a = 143.92/5.21(6) = 4.60\ KSF$

$$q_u = \frac{125(4.5)(17)(1 - 5.0/90)^2 + 0.4(125)(5.21)(17)(1 - 5/30)^2}{1000}$$

$q_u = 11.60\ KSF$

$F.S. = 11.60/4.60 = 2.52 > 2.0$

SUBJECT R.T.S. - Maint.

COMPUTATION Footing Reinforcement

COMPUTED BY SAG CHECKED BY DATE 5-25-89

Footing A Check: D+S+A ($1^{st}$ Interior Frame) $P_{Max} = 143.72$ K

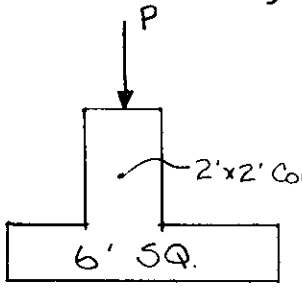


DL = 47.66 K
LL = .75(28.93) + 74.4 = 96.1 K
Col size = 24" x 24"
Footing size = 6' SQ = 36 ft2
Footing Slab thickness = 18"

Factored Load = 1.4(47.66) + 1.7(96.1) = 230.094 K
or 230,094 lb

factored load intensity $q_s = U/A_F = \frac{230094}{36} = 6392$ psf

Shear Capacity

$d = 18" - (3 + 1"/2) = 14.5"$

Shear @ d from Support Face

factored $V_u = 6392(6/2 - 2/2 - 14.5/12)6 = 30,362$ lb.

$b_w = 6.0' = 72"$

$V_n = \frac{30,362}{.85} = \underline{35,720 \text{ lb}}$

available $V_c = 2\sqrt{f_c'}\, b_w d = 2\sqrt{3000}(72)(14.5) = \underline{114,364 \text{ lb}}$ OK

2-Way Action @ d/2

factored $V_u = 6392\left[36 - \left(\frac{24 + 14.5}{12}\right)^2\right] = 164,316$ lb.

$V_n = 164,316/.85 = \underline{193,313 \text{ lb}}$

$b_o = (24 + 14.5)4 = 154$ IN

$V_c = 4\sqrt{f_c'}\, b_o d = 4\sqrt{3000}(154 \text{ IN})(14.5) = \underline{489,226 \text{ lb}}$

SUBJECT RTS- Maint

COMPUTATION Footing Reinforcement

COMPUTED BY SAG CHECKED BY DATE 5-25-89

Bending Moment

Moment Arm = 6/2 - 2/2 = 2'

Factored $M_u = 6392 \times 6 \left[\frac{(2)^2}{2}\right] = 76,704$ FT-lb

or

920,448 IN-lb

$M_n = \frac{920,448}{.9} = 1,022,720$ IN-lb

$M_n = A_s f_y (d - a/2)$

assume $d - a/2 = .9d$

$1,022,720 = A_s \times 60,000 \times .9 \times 14.5$

$A_s = 1.31$ IN²/72 IN band

$a = \frac{A_s f_y}{.85 f_c' b} = \frac{1.31(60,000)}{.85(3000)(72)} = .428$

$1,022,720 = A_s \times 60,000 (14.5 - .428/2)$

$A_s = 1.19$ IN²/72 IN band

$\rho = 1.19/14.5(72) = .0011$

Min = .0018 (72)(14.5) = 1.88 IN²/72 IN band

USE 6 #6 bars EW @ 12" $A_s = 2.64$ IN²

Bearing Strength of Col. $P_u = 230,094$ lb

$\phi P_{nb} = .6(3000)(24 \times 24) = 1,036,800$ lb

Dowels Min = 0.005(24)(24) = 2.88 IN²

8 #8 bars — $A_s = .79(8) = 6.32$ IN²

SUBJECT RTS-Maint.

COMPUTATION Slab on grade M1-TANK

COMPUTED BY SAG CHECKED BY DATE 5-25-89

Ref.: TM5-809-12 "Concrete Floor Slabs on Grade Subjected to Heavy Loads"

Requirements: Design the Slab on grade in the work bay area for the M1 Abrams Tank.

Tank:
Total Gross Weight = 60 Tons = 120,000 lbs.

Data: Subgrade Soil Modulus = K = 200 pci
Conc. compressive str. = 4000 psi
Conc. flexural str. = 600 psi

Solution: Based on 120 kips gross weight, the equivalent forklift truck Category IV is selected (Para. 3-2). From the 1st tabulation in paragraph 3-2 for cat IV, forklift truck axle load is 25 to 36 kips. Table 5-2 is entered using 36 kips

8" Slab ok for 5,000,000 vehicle passes.

Min steel = .05% x 12 x 8 = .048 $IN^2$

USE WWF 6x6 - W10/W10

SUBJECT R.T.S. - Maint.

COMPUTATION Device Lab — Classroom Area

COMPUTED BY SAG CHECKED BY DATE

# DEVICE LAB
# &
# CLASSROOM AREA

SUBJECT RTS. – Maint.
COMPUTATION Device Lab – Classroom Area
COMPUTED BY SAG CHECKED BY DATE 5-25-89

Device Lab – Classroom Area

Mechanical and Electrical allowances

| | |
|---|---|
| Acoustical Fiber Tile | – 1 psf |
| Susp. st. Channel Syst. | – 2 psf |
| Mech. duct allow. | – 4 psf |
| Electrical lighting, Misc. allowances | – 1.5 psf |
| | 8.5 psf |

Hung. Mechanical equipment to be evaluated separately.

Purlins Check Combined Uniform and Drift loads

1. Low Roof below tank repair high roof

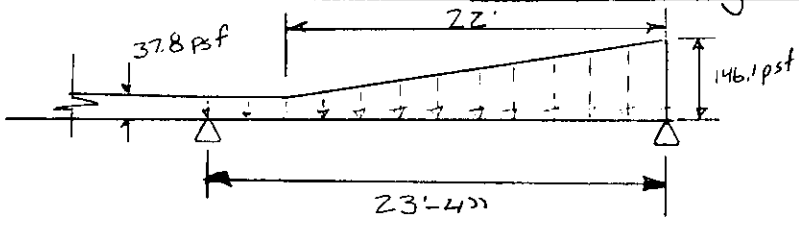


USE AVE = $\frac{146.1 + 37.8}{2}$ = 91.95 psf x 2.5' = 228 plf

Roofing = 1.42 psf
Ins. = 1 psf
Mech allow = 8.5 psf
Purlin = 2.0 psf
12.92 psf x 2.5 = 32.3 plf
260.3 plf

$M = \frac{(.2603)(23.33)^2}{10} = 14.2$

$S = \frac{14.2(12)}{33} = 5.16 \text{ IN}^3$

USE 9.5 Z 12 @ 24" $S_x = 5.14 \text{ IN}^3$ Wt = 6.05 lb/FT)

SUBJECT R.T.S. - Maint

COMPUTATION Device lab - Classroom Area

COMPUTED BY SAG CHECKED BY DATE 5-25-89

## 2. Low Roof from Device lab

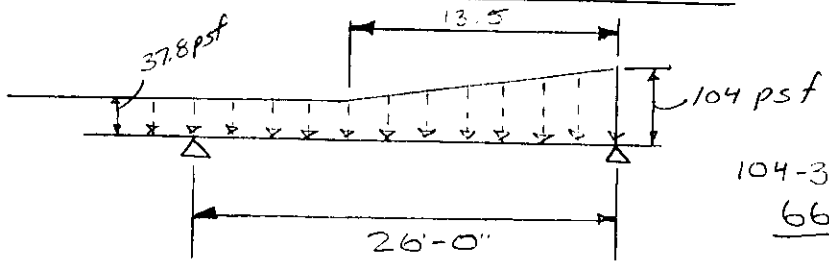


$104 - 37.8 = 66.2$ psf

$\frac{66.2 \text{ psf}}{2} = 33.1$ psf

$$AVE = \frac{37.8 + (33.1 + 37.8)}{2} = 54.35 \text{ psf}$$

LL = 54.35 x 2 = 108.7 plf
DL = 12.92 x 2 = 25.8 plf
134.5 plf

$$M = \frac{.1345(26)^2}{8} = 11.36 \text{ FT-K}$$

$$S = \frac{11.36(12)}{33} = 4.13 \text{ IN}^3$$

USE 9.5 Z12 wt = 6.05 lb/FT

## 3. Check Uniform 25.0' Span

DL = 12.92 psf x 4.0 = 51.68
LL = 37.8 psf x 4.0 = 151.2
202.9 plf

$$M = \frac{(.2029)(25.0)^2}{10} = 12.68 \text{ FT-K}$$

$$S = \frac{12.68(12)}{33} = 4.6 \text{ IN}^3$$

USE 9.5 Z 12 wt = 6.05 lb/FT

# Typical Device lab frame

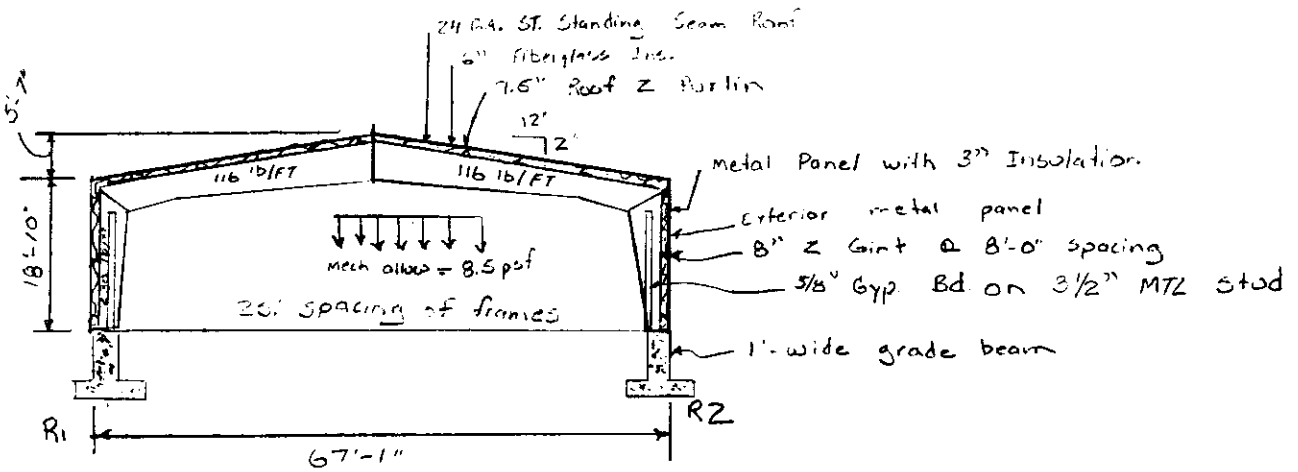


wt. – 5/8" Gyp. Bd. on 3 1/2" MTL STUD = 8 psf
24 GA Roof = 1.42 psf
9.5 Roof Purlin, 6.05 lb/ft @ 4'-0" O.C. = 1.51 psf
6" Fiberglass insulation = 1.0 psf
3" Fiberglass w st panel = 1.85 psf
Arch. Steel panel = 1.35 psf
8" Purlin = .4 psf
Window, glass, frame & sash = 8 psf, 8'x4' (1 eq.)

SUBJECT RTS-Maint.

COMPUTATION Device Lab Frame

COMPUTED BY SAG CHECKED BY DATE 6-2-89

## Calculate Dead Weight Reactions (Col. line 12)

$R_{1V} = R_{2V}$ , $R_{1H} = R_{2H} = 0$

$R_{1V} = R_{2V} = (1.42 + 1.5 + 1.0 + 8.5)\,34.0(25) + (1.35 + .4 + 1.85)[(8.83 \times 25) - (8' \times 4')] + 8(8' \times 4') + 8[(15.3)(25) - (8' \times 4')] + 116(34.0) + 120(15.3) + [1(4) + (2 \times 1)](25 - 6)\,150\ \text{lb/ft}^3$

$= 10557 + 1580 + 256 + 2804 + 3944 + 1836 + 17100$

$= \underline{38{,}077\ \text{lb}}$ or $\underline{38.08\ \text{Kips}}$

## Calculate live Load Reactions (Col. line 12)

$R_1 = R_2 = 37.8\ \text{psf}(25')(34) = \underline{\underline{32{,}130\ \text{lbs.}}}$

## WIND LOADS

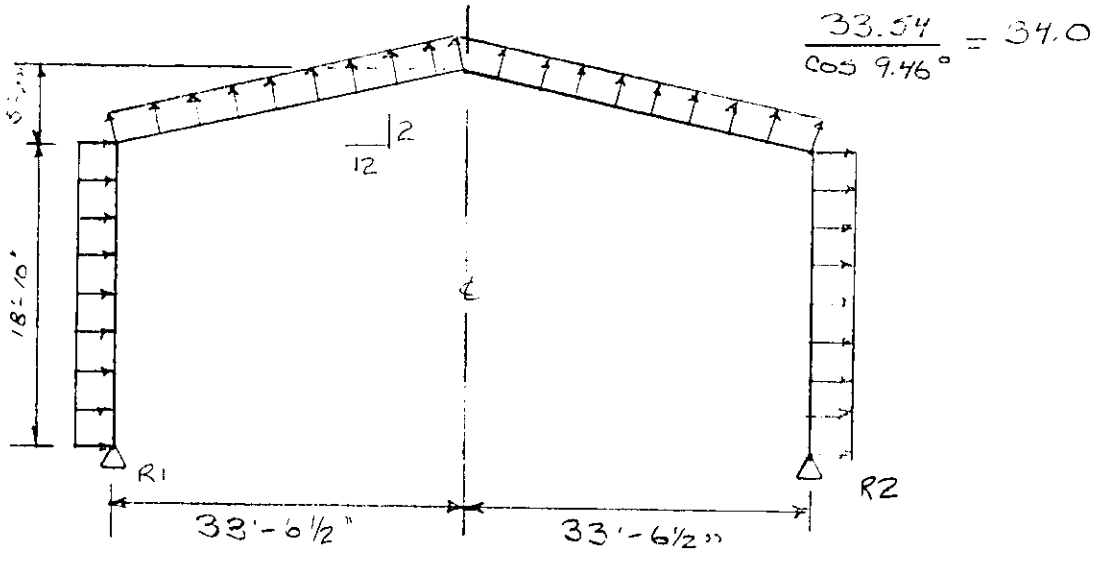

SUBJECT RTS - Maint.
COMPUTATION Device Lab Frame.
COMPUTED BY SAG CHECKED BY DATE 6-12-89

Case I

$R_{1H} = 4.39 psf(18.83)(25) - (17.57)(34)(25)\sin 9.46°$
$= 2067 - 2455 = \underline{-388 \text{ lb}}$

$R_{2H} = 9.66 psf(18.83)(25) + 11.42(34)(25)\sin 9.46°$
$= 4547 + 1595 = \underline{6,142 \text{ lb.}}$

$R_{1V} = (17.57 psf)(34.0)(25)\cos 9.46° = \underline{14,732 \text{ lb.}}$

$R_{2V} = (11.42 psf)(34.0)(25)\cos 9.46° = \underline{9,575 \text{ lb.}}$

Case II

$R_{1H} = 11.42 psf(18.83)(25) - 10.54(34)(25)\sin 9.46°$
$= 5376 - 1472 = \underline{3904 \text{ lb}}$

$R_{2H} = 2.63 psf(18.83)(25) + 4.39(34)(25)\sin 9.46°$
$= 1238 + 613 = \underline{1,851 \text{ lb}}$

$R_{1V} = (10.54)(34.0)(25)\cos 9.46° = \underline{8,837 \text{ lb}}$

$R_{2V} = (4.39)(34.0)(25)\cos 9.46° = \underline{3,681 \text{ lb}}$

By observation and comparison with the tank work bay frames, the footings are stable.

## Device Lab End Frame

Frames: 25.0/2 + 26.0/2 =

$\frac{33.54}{\cos 9.46°} = 34.0'$

$\frac{22.27}{\cos 9.46°} = 22.57$

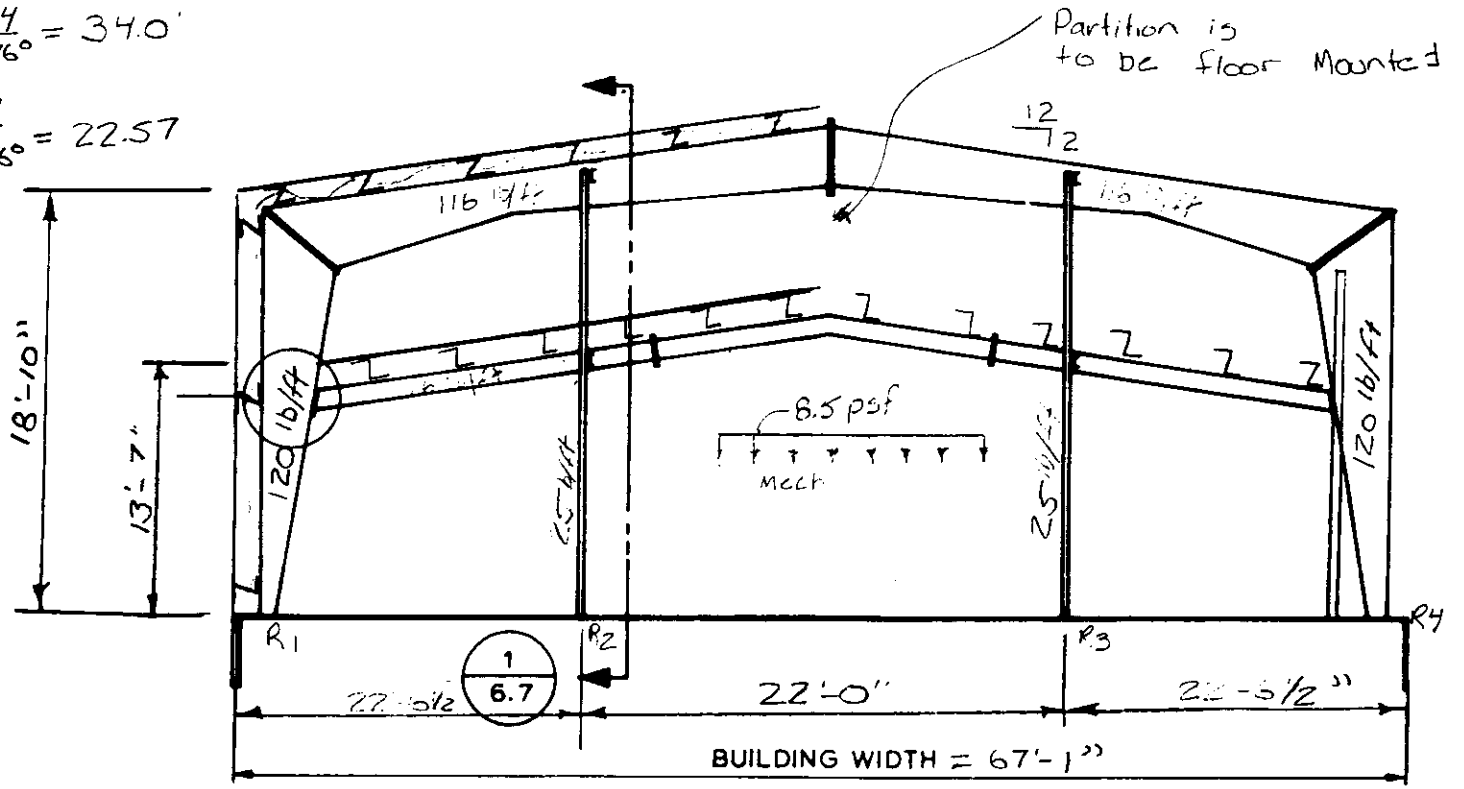


## DEAD WEIGHT REACTIONS

$R_{1V} = R_{4V}$, $R_{1H} = R_{4H} = 0$

(Assuming interior columns take no load)

$R_{1V} = R_{4V} = (1.42 + 1.5 + 1.0 + 8.5)(25/2)(34) + (1.42 + 3.0 + 1.0 + 8.5)(26/2)(34)$
$+ (1.35 + .4 + 1.85)[(13.58 \times 25/2) - (4' \times 4')] + 8(8 \times 4) + (1.35 + .4 + 1.85)$
$[(13.58 \times 26/2) - (4' \times 4')] + 8[(10.08)(26/2) - (4 \times 4)]$
$+ 116(34) + 120(15.2) + 26(34) + [1(4) + 2(8)](25.5 - 6)\,150$

$R_{1V} = R_{4V} = 5278.5 + 6153 + 790 + 256 + 578 + 1402 + 920 + 3944 + 1836$
$+ 884 + 17550 = \underline{39{,}592 \text{ lb.}}$ or $\underline{39.6\text{K}}$

SUBJECT RTS-Maint

COMPUTATION Device Lab - End Frame

COMPUTED BY SAG CHECKED BY DATE 6-2-89

DEAD Weight Reaction (assume interior columns are load bearing)

$$R2 = R3 = (1.42 + 30 + 1.0 + 8.5)(22.57)(13) + (1.35 + .4 + 1.85)(22.57)(5.25) + 25(22.57)$$
$$= 4084 + 427 + 564.5 = \underline{\underline{5075.5 \text{ lb.}}}$$

Live load Reactions

$$R_1 = R_4 = 37.8(34.0)(12.5) + 37.8(34.0)(13) + 33.1(13)(34)$$
$$= 16{,}065 + 16{,}708 + 14{,}630 = \underline{\underline{47{,}403 \text{ lb.}}}$$

$$R2 = R3 = 37.8(22.57)(13) + 33.1(22.57)(13)$$
$$= 10{,}943 + 9583 = \underline{\underline{20{,}802 \text{ lb}}}$$

Wind Load Case I

high Roof

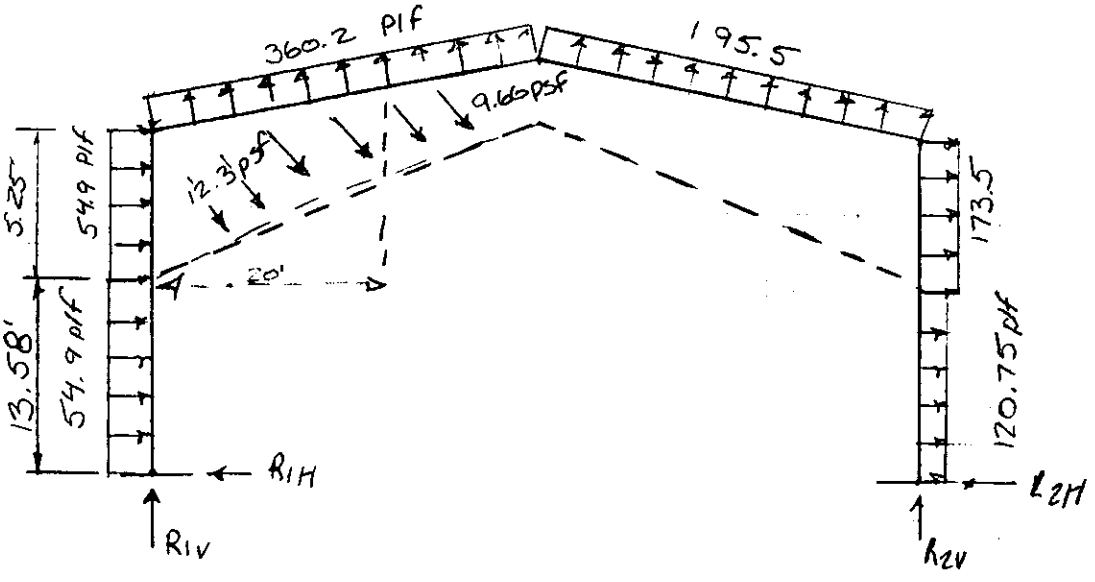

SUBJECT RTS-Maint

COMPUTATION Device 49D - End Frame

COMPUTED BY SAG CHECKED BY DATE 6-14-89

Low Roof Case I

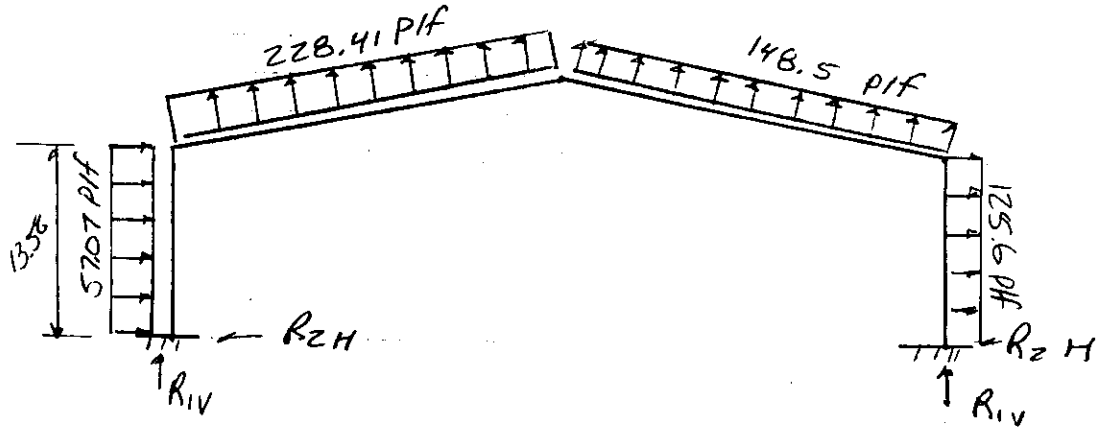


Reactions

high roof

$R_{1Hx} = 54.9(18.83) - 360.2(34)(\sin 9.46°)$
$= 1034 - 2013 = -979$ lb

$R_{2Hx} = 120.75(13.58) + 173.5(5.25) + 195.5(34)(\sin 9.46°)$
$= 1640 + 911 + 1092 = 3643$ lbs

$R_{1V} = 360.2(34)\cos 9.46° = 12{,}080$ lbs

$R_{2V} = 195.5(34)\cos 9.46° = 6556$ lbs

$R_{1Hy} = R_{2Hy} = 12.3\text{ psf}(5.25)(20) + 9.66(5.25)(14) = 2001$ lbs
(Due to CROSS BRACING this load is transfered to Col. line 12)

Low roof

$R_{1Hx} = 57(13.58) - 228.41(34)\sin 9.46°$
$= 774 - 1276 = -502$ lbs.

$R_{2Hx} = 125.6(13.58) + 148.5(34)\sin 9.46° = 2536$ lbs.

$R_{1V} = 228.41(34)\cos 9.46 = 7660$ lbs

$R_{2V} = 148.5(34)\cos 9.46 = 4980$ lbs

$R_{1Hy} = R_{2Hy} = 0$

SUBJECT RTS-Maint
COMPUTATION Device Lab - End Frame
COMPUTED BY SAG CHECKED BY DATE 6-14-89

## Combined Reactions

$R_{1Hx} = -979 + -502 = -\underline{1481 \text{ lb.}}$

$R_{2Hx} = 3643 + 2536 = +\underline{6179 \text{ lb.}}$

$R_{1V} = 12080 + 7660 = \underline{19740 \text{ lb}}$

$R_{2V} = 6556 + 4980 = \underline{11,536 \text{ lb.}}$

$R_{1Hy} = R_{2Hy}$ due to end wall

## Area of Exterior Zone & Interior Zone

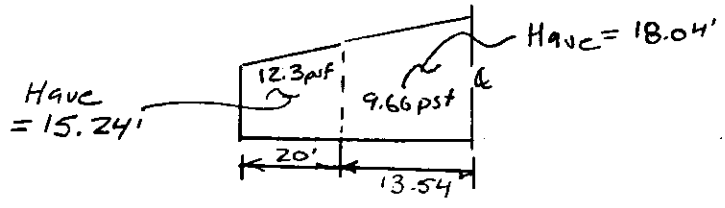


$R_{1Hy} = R_{2Hy} = 12.3psf(20)(15.24/2) + 9.66(13.54)(18.04/2)$

$= 1874 \text{ lb} + 1180 = \underline{\underline{3054 \text{ lb.}}}$

## Bearing Capacity Analysis (6x6 Footing)

1. LOAD CASE 8 DEAD + SNOW

$V = 36.9K + 47.4 = 84.3K$

Not Critical - See tank bay calcs.

SUBJECT RTS- Maint.

COMPUTATION Device lab - End Frame

COMPUTED BY SAG CHECKED BY DATE 6-15-89

2. DEAD + Auxiliary - N.A.

3. LOAD CASE 8 DEAD + WIND or E
(E not critical, See tank Bay Calcs.)

$R_1H_x = -1481$ lb $R_2H_x = 6179$
$R_1H_y = 3054$ lb $R_2H_y = 3054$ lb

$R_1V = 39.6 - 19.740 = 19.86K$
$R_2V = 39.6 - 11.54 = 28.06K$

Check R1

$\Sigma V = 19.86 + 20.25 + 1.65 = 41.76$ K
$\Sigma H_b = 3.05$ K, $\Sigma H_y = 1.48$K

$e_b = 3.05(4.5)/41.76 = .329$, $B' = 6 - 2(.329) = 5.342'$

$e_y = 1.48(4.5)/41.76 = .160$, $Y' = 6 - 2(.16) = 5.68'$

$\Sigma H = \sqrt{(3.05)^2 + (1.48)^2} = 3.39$ K

$\alpha = \text{ARCTAN}\left(3.39/41.76\right) = 4.64°$

$q_a = 41.76K/(5.342)(5.68) = 1.37$ KSF

$$q_u = \frac{125(17)(4.5)(1 - 4.64/90)^2 + 0.4(125)(5.342)(17)(1 - 4.64/30)^2}{1000}$$

$= 12.31$ KSF

$FS = 12.31/1.37 = 8.98 > 2.0$ ok

Check R2

$\Sigma V = 28.06 + 20.25 + 1.65 = 49.96$ K
$\Sigma H_b = 6.179$ K, $\Sigma H_y = 3.05$K.

$e_b = 6.179(4.5)/49.96 = .556$, $B' = 6' - 2(.556) = 4.89'$

$e_y = 3.05(4.5)/49.96 = .275$, $Y' = 6' - 2(.275) = 5.45'$

$\Sigma H = \sqrt{(6.179)^2 + (3.05)^2} = 6.89K$

$\alpha = \text{ARCTAN}\left(6.89/49.96\right) = 7.85°$

SUBJECT RTS-Maint.
COMPUTATION Device Lab - End Frame
COMPUTED BY SAG CHECKED BY DATE 6-15-89

$$q_a = 49.96K / (4.89)(5.45) = 1.87 \text{ KSF}$$

$$q_u = \frac{125(4.5)(17)(1 - 7.85/90)^2 + 0.4(125)(4.89)(17)(1 - 7.85/30)^2}{1000}$$

$$q_u = 10.23 \text{ KSF}$$

$$FS = 10.23 \text{KSF} / 1.87 \text{KSF} = 5.47 > 2.0$$

4 LOAD CASE: DEAD + SNOW + A - N.A.

5 LOAD CASE: DEAD + SNOW + E - Not Critical

6 LOAD CASE: DEAD + .5W + A - N.A.

7 LOAD CASE: DEAD + SNOW + .5W (Check R2)

$$\Sigma V = 39.6 + 47.4 - .5(11.54) + 20.25 + 1.65 = 103.13$$

$$\Sigma H_b = .5(6.179) = 3.09 \text{ K}, \quad \Sigma H_y = .5(3.05) = 1.52 \text{ K}$$

$$e_b = 3.09(4.5)/103.13 = .135, \quad B' = 6' - 2(.135) = 5.73'$$

$$e_y = 1.52(4.5)/103.13 = .066, \quad Y' = 6' - 2(.06) = 5.87'$$

$$\Sigma H = \sqrt{(3.09)^2 + (1.52)^2} = 3.44$$

$$\alpha = \text{ARCTAN}(3.44/103.13) = 1.91°$$

$$q_a = 103.13 / (5.73)(5.87) = 3.07 \text{ KSF}$$

$$q_u = \frac{125(4.5)(17)(1 - 1.91/90)^2 + 0.4(125)(5.73)(17)(1 - 1.91/30)^2}{1000}$$

$$q_u = 13.43 \text{ KSF}$$

$$FS = 13.43 \text{ KSF} / 3.07 = 4.37 > 2.0 \text{ o.k.}$$

SUBJECT RTS-Maint
COMPUTATION Device Lab - End Frame
COMPUTED BY SAG CHECKED BY DATE 6-15-89

8. LOAD CASE: DEAD + .5S + W

$\Sigma V = 39.6 + .5(47.4) - 11.54 + 20.25 + 1.65 = 73.66K$
$\Sigma H_b = 6.179K$ , $\Sigma H_y = 3.05\ K$

$e_b = 6.179(4.5)/73.66 = .377$ , $B' = 6' - 2(.377) = 5.25'$

$e_y = 3.05(4.5)/73.66 = .186$; $Y' = 6' - 2(.186) = 5.63'$

$\Sigma H = \sqrt{(6.179)^2 + (3.05)^2} = 6.89\ K$

$\alpha = ARCTAN(6.89K/73.66) = 5.34°$

$q_a = 73.66/(5.25)(5.63) = 2.49\ KSF$

$$q_u = \frac{125(4.5)(17)(1 - 5.34/90)^2 + 0.4(125)(5.25)(17)(1 - 5.34/30)^2}{1000}$$

$q_u = 11.48\ KSF$

$FS = 11.48/2.49 = 4.61 > 2.0$ OK

Col. line 3

Width = 17.5/2 + 25.0/2 = 21.25'

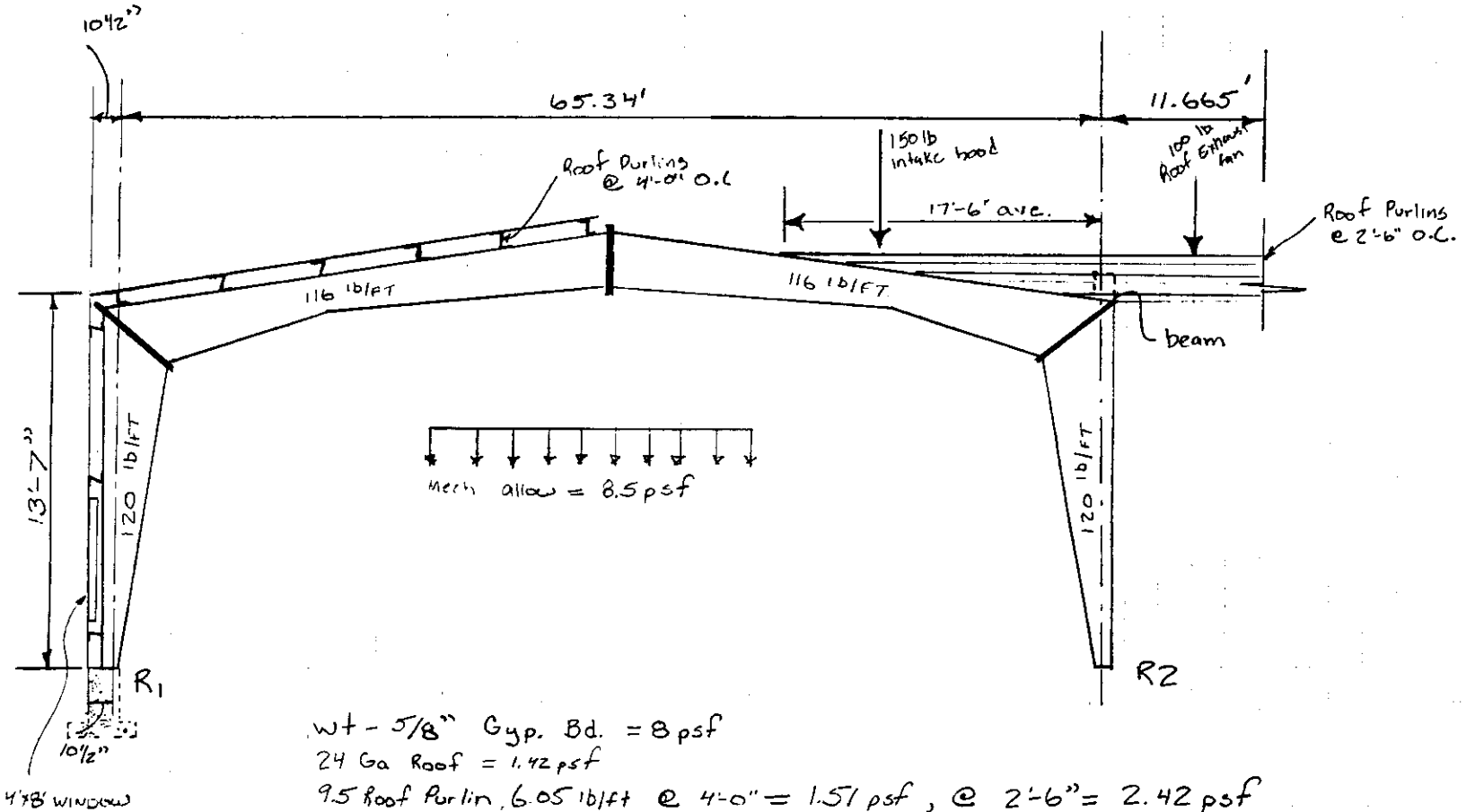


wt - 5/8" Gyp. Bd. = 8 psf
24 Ga Roof = 1.42 psf
9.5 Roof Purlin, 6.05 lb/ft @ 4'-0" = 1.51 psf, @ 2'-6" = 2.42 psf
6" Fiberglass = 1.0 psf
3" Fiberglass with st. panel = 1.85 psf
Arch. Steel panel = 1.35 psf
8" Purlin = .4 psf
Window, glass, frame = 8 psf

SUBJECT RTS - Maint.
COMPUTATION Office Frame
COMPUTED BY SAG CHECKED BY DATE 6-5-89

Calculate Dead Weight Reactions Col. line 3

$R_1 = (1.42 + 1.51 + 1.0 + 8.5)(34.)(21.25)$
$+ (1.35 + .4 + 1.85)[(13.58 \times 21.25) - (8' \times 4')]$
$+ 8(8' \times 4') + 8[(10.08)(21.25) - (8')(4)]$
$+ 116(34.0) + 120(10.08) + [1(4) + (2)(1)](21.25' + 10.0 - 6.0')150$ lb/ft

$= 8981 + 924 + 256 + 1458 + 3944 + 1210 + 22,725$
$= \underline{\underline{39,500 \text{ lb}}}$

$R_2 = (1.42 + 1.51 + 1.0 + 8.5)(34 - 17.5)(21.25) + (1.42 + 2.42 + 1.0 + 8.5)(29.2)(21.25)$
$+ 150 + 100 + 116(34) + 120(10.08) + 27'(30 \text{ lb/ft}) + 2125(50)$
$= 4358 + 8277 + 150 + 100 + 3944 + 1210 + 810 + 106 \text{ lb.}$
$= \underline{\underline{19,911 \text{ lb.}}}$

Live Load Reactions

$R_1 = 37.8 \text{ psf}(34')(21.25) = 27,310.5 \text{ lb.} = \underline{\underline{27.3 \text{ Kips}}}$

$R_2 = 37.8 \text{ psf}(34)(21.25) + 45.97 \text{ psf}(11.665)(21.25) = 38705.6 \text{ lb}$
$= \underline{\underline{38.7 \text{ K}}}$

Frame Not Critical => See tank bay frames

Check R2 with Concrete Frame (Col line 5, 7, 9)

DL REACTION FROM CONCRETE FRAM
$150[(6')(1)(12') + .83(6)(10.91)] + 5.5(6)(10.91) = 19.3 \text{ K}$

LL REACTION $= \dfrac{20 \text{ psf}(6)(10.91)}{1000} = 1.3 \text{ K}$

Total DL + LL = 19.9 + 38.7 + 19.3 + 1.3 = 79.2

FROM Table on page 29 : 1 = 140.69 for 6x6 footing
∴ footing is adequate

SUBJECT RTS-Maint

COMPUTATION Office Area - End Frame

COMPUTED BY SAG CHECKED BY DATE 6-13-89

# END FRAME - OFFICE AREA

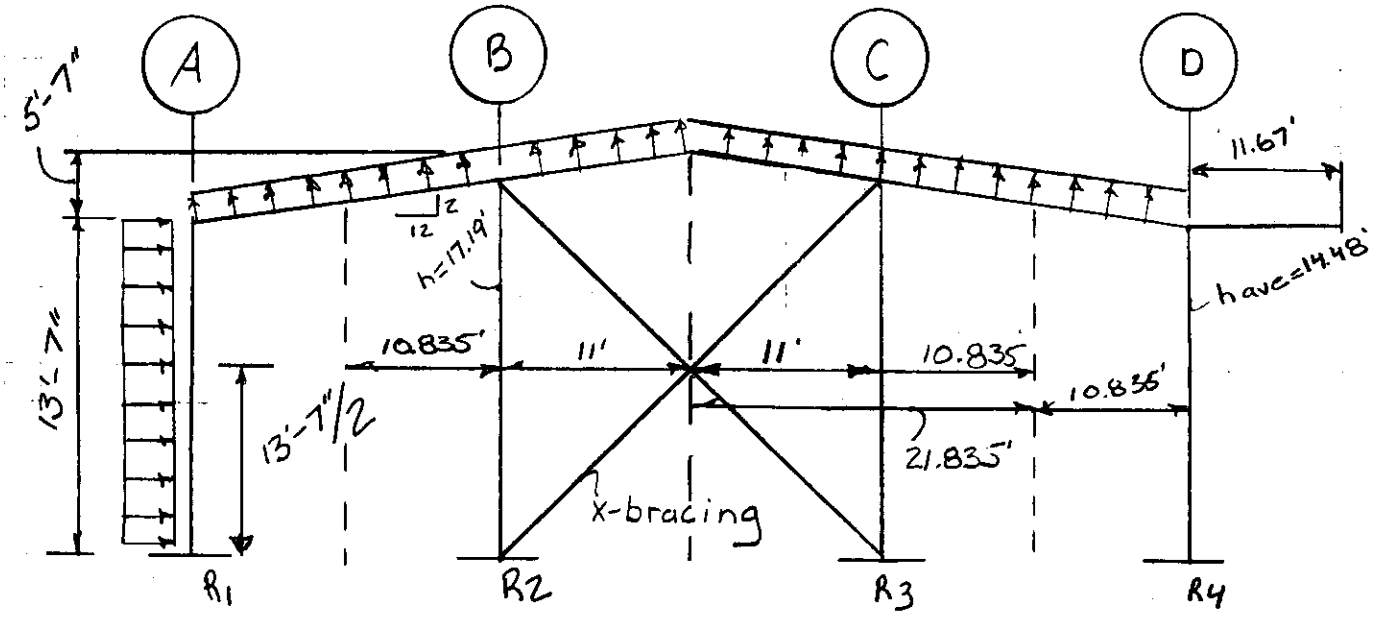


* Case I — (Assume uplift by influence area) $\frac{32.67}{\cos 9.46^\circ} = 33.12^\circ$

$R_{1Hx} = 54.9\,plf(6.79) = \underline{372\ lbs.}$

$R_{2H_1} = 195.5(33.12)\sin 9.46^\circ = \underline{1064.2\ lb}$

$R_{3H} = 54.9(6.79) - 360.2(33.12)\sin 9.46^\circ = \underline{-1588\ lb.}$

$\underline{R_{4x} = 0}$

$R_{1V} = 10.835(360.2) = \underline{3902\ lb}$
$R_{2V} = 21.835(360.2) = \underline{7864\ lb}$
$R_{3V} = 21.835(195.5) = \underline{4269\ lb}$
$R_{4V} = 22.5(195.5) = \underline{4398\ lb}$

Case II

$R_{1Hx} = 225.3(6.79) = \underline{1530\ lbs}$
$R_{2Hx} = 107(33.12)\sin 9.46^\circ = \underline{582\ lb.}$
$R_{3H} = 225.3(6.79) - 272.3(33.12)\sin 9.46^\circ = \underline{47.5\ lb.}$
$R_{4V} = 0$
$R_{1V} = 10.835(272.3) = \underline{2950\ lb}$
$R_{2V} = 21.835(272.3) = \underline{5946\ lb}$
$R_{3V} = 21.835(107.6) = \underline{2349\ lb}$
$R_{4V} = 22.5(107.6) = \underline{2421\ lb}$

SUBJECT RTS - Maint

COMPUTATION Office Area - End Frame

COMPUTED BY SAG CHECKED BY DATE 6-14-89

Wind Direction in the Y Direction

Case I (6 int., 6E)

$R_{1Hy} = 12.30\,psf(6.79)(10.835) = \underline{905\ lb.}$

$R_{2Hy} = 12.30\,psf(17.19/2)(10.835) + 9.66(17.19/2)(11)$
$= \underline{2059\ lb.}$

$R_{4Hy} = 9.66(14.48/2)(22.5) = \underline{1574\ lb.}$

$R_{3Hy} = 9.66(17.19/2)(21.835) = \underline{1813\ lb}$

Case II (5 int, 5E)

$R_{1Hy} = 15.81\,psf(6.79)(10.835) = \underline{1163\ lb.}$

$R_{2Hy} = 15.81(17.19/2)(10.835) + 11.42\,psf(17.19/2)(11)$
$= \underline{2552\ lb.}$

$R_{3Hy} = 11.42\,psf(17.19/2)(21.835) = \underline{2143\ lb.}$

$R_{4Hy} = 11.42\,psf(14.48/2)(22.5) = \underline{1860\ lb}$

Case I, appears critical for Wind load

SUBJECT RTS - Maint.

COMPUTATION Office Area - End Frame

COMPUTED BY SAG CHECKED BY DATE 6-14-89

## DEAD LOAD REACTIONS (1/2 span = 12.5')

R1 => NOT CRITICAL

R2 = R3

$$R2 = R3 = (1.42 + 1.51 + 1.0 + 8.5)(21.835)(12.5) + (1.35 + .4 + 1.85)[(17.19)(21.835) - (4)(4)] + 8(4)(4) + 8[(17.19)(21.835) - (4)(4)] + 50(21.835) + 50(19.167) + [1(4) + 2(1)](21.835 - 4)150 + 2(20)(27.9)$$

Bracing

$$= 3393 + 1294 + 128 + 2875 + 1092 + 958 + 16{,}051 + 1116$$

$$= \underline{26{,}907 \text{ lb} = 26.91K}$$

$$R4 = (1.42 + 1.51 + 1.0 + 8.5)\,5.42(12.5) + (1.42 + 2.42 + 1.0 + 8.5)(5.42 + 11.66)(12.5) + (1.35 + .4 + 1.85)(14.48)(22.5) + 8(14)(22.5) + 50(22.5) + 50(13.58) + [1(4) + 2(1)][22.5 - 4)150$$

$$= 842 + 2849 + 1173 + 2520 + 1125 + 679 + 16{,}650 = \underline{25{,}838 \text{ lb.} = 25.84K}$$

## Live Load Reactions

$$R2 = R3 = 37.8\text{psf}(21.835)(12.5) = \underline{10{,}317 \text{ lb}} \text{ or } \underline{10.3K}$$

$$R4 \text{ (Drift Inc)} = 37.8\text{psf}(21.67/2)(12.5) + 45.47(23.33/2)12.5$$

$$= \underline{11{,}822 \text{ lb or } 11.8K}$$

*Check For Critical

$$R2, R3 = 26.9 + 10.3 = 37.2K$$

$$* \; R4 = 25.8 + 11.8 = \underline{37.6K}$$

SUBJECT RTS-Maint

COMPUTATION Office area - End Frame

COMPUTED BY SAG CHECKED BY DATE 6-6-89

Check Footing @ E3 (To See if Critical)

Roof Area = (12.5' + 8.75') 11.665 = 247.9 ft²

Dead Load = (1.42 + 2.42 + 1.0 + 8.5) 247.9 ft² + 150 lb + 50(16.75') + 50(21.25)

= 5357 lbs. ∴

Live Load

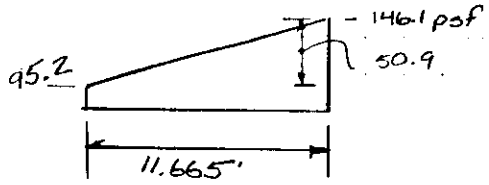


LL = 95.2(247.9 ft²) + 50.9/2 (247.9 ft²) = 29,909 lbs.

DL + LL = 35,266 lbs. < 37,600

∴ R4 Critical for DL + LL

Seismic V = Z I K Cs W

@ R2, R3

W = (26.91 - 16.05) + .25 (10.3) = 13.43

V = .14 (.375)(1)(1.5)(1.33)(13.43) = 1.4 K

@ R4

W = (25.84 - 16.65) + .25 (11.8) = 12.14K

V = .14 (.375)(1)(1.5)(1.33)(12.14K) = 1.27K

SUBJECT RTS-Maint.
COMPUTATION Office Area - End Frame
COMPUTED BY SAG CHECKED BY DATE 6-6-89

## Check Bearing End Frame (Col. line 1)

### Footing B (exterior)

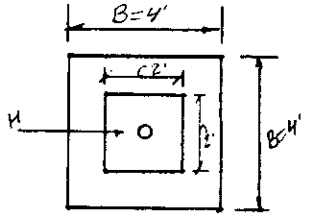


PLAN

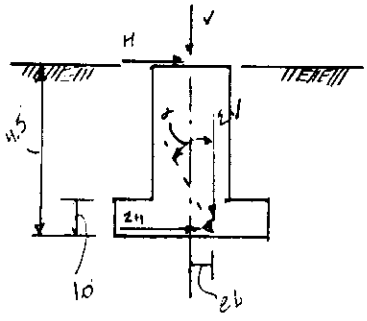


Effective Wt. of Soil above base
$= 4(4)(4.5)(125/1000) = 9.0K$

Wt. of Concrete in excess of Displaced Soil.

$$\frac{[4(4)(1.0)+(2)(2)(3.5)](150-125)}{1000} = .75K$$

For $\phi = 30°$, $N_q = N_\gamma = 17$

$$q_u = \gamma D N_q (1-\alpha/90°)^2 + 0.4\gamma B' N_\gamma (1-\alpha/\phi)^2$$

### 1. LOAD CASE: DEAD + SNOW (D-1)(RH)

$V = 25.79 + 11.82 = 37.61$ K
$\Sigma V = 37.61 + 9.0 + .75 = 47.36$ K

$q_a = 47.36/(4)(4) = 2.96$ KSF

$$q_u = \frac{(125)(4.5)(17) + 0.4(125)(4)(17)}{1000} = 12.96$$

Factor of Safety $= q_u/q_a = 12.96/2.96 = 4.38$ 72.0 OK

SUBJECT RTS-Maint

COMPUTATION Office Area - End Frame

COMPUTED BY SAG CHECKED BY DATE 6-14-89

3. LOAD CASE: DEAD + WIND or (E)

Check R2 with wind load

$\Sigma V = 26.91 - 7.86 + 9 + .75 = 28.8K$

$\Sigma Hb = 2.06K$

$\Sigma Hy = 1.06K$

$eb = 4.5(2.06)/28.8 = .32'$, $B' = 4 - 2(.32) = 3.36'$

$ey = 4.5(1.06)/28.8 = .165'$, $y' = 4 - 2(.165) = 3.67'$

$\Sigma H = \sqrt{(2.06)^2 + (1.06)^2} = 2.32K$

$\alpha = ARRTAN\left(2.32/28.8\right) = 4.6°$

$qa = 28.8/(3.67)(3.36) = 2.33$ KSF

$$qu = \frac{125(17)(4.5)(1 - 4.6/90)^2 + 0.4(125)(3.36)(17)(1 - 4.6/30)^2}{1000}$$

$qu = 10.66$ KSF $FS = 10.66/2.33 = 4.57 > 2.0$

Check R3 with wind load

$\Sigma V = 26.91 - 4.27 + 9 + .75 = 32.39K$

$\Sigma Hb = 1.81K$

$\Sigma Hy = 1.59K$

$eb = 1.81(4.5)/32.39 = .251'$, $B' = 4 - 2(.251) = 3.50'$

$ey = 1.59(4.5)/32.39 = .221$, $y' = 4 - 2(.221) = 3.56'$

$\Sigma H = \sqrt{1.81^2 + (1.59)^2} = 2.41K$

$\alpha = ARCTAN\left(2.41/32.39\right) = 4.26°$

$qa = 32.39/(3.5)(3.56) = 2.60$ KSF

$$qu = \frac{125(17)(4.5)(1 - 4.26/90)^2 + 0.4(125)(3.5)(17)(1 - 4.26/30)^2}{1000}$$

$qu = 10.87$ $FS = 10.87/2.6 = 4.18 > 2.0$

SUBJECT RTS-Maint.
COMPUTATION Office Area End Wall
COMPUTED BY SAG CHECKED BY DATE 6-8-89

5. LOAD CASE: DEAD + SNOW + EARTHQUAKE (D-1)
(USE .25S when snow load > 31psf)

$\Sigma V = 26.91 + .25(10.3) + 9.0 + .75 = 39.23\,K$ (29.48K)
$\Sigma H_E = 1.4K$

$e_b = 1.4(4.5)/39.23 = .16$, $B' = 4 - 2(.16) = 3.68'$

$\alpha = ARCTAN(1.4/39.23) = 2.04°$

$q_a = 39.23/4(3.68) = 2.66$ KSF

$$q_u = \frac{(125)(17)(4.5)(1 - 2.04/90)^2 + .4(125)(3.68)(17)(1 - 2.04/30)^2}{1000}$$

$= 11.85$ KSF $\quad FS = 11.85/2.66 = 4.45 > 1.5$

7. LOAD CASE: DEAD + SNOW + .5 WIND (Check R3)

$\Sigma V = 26.91 + 10.3 - (4.27).5 + 9.0 + .75 = 44.82$ (35.1K)

$\Sigma H_b = (.5)(1.81) = .905\,K$
$\Sigma H_y = (.5)(1.59) = .795\,K$

$e_b = .905(4.5)/44.82 = .091$, $B' = 4 - 2(.091) = 3.82'$

$e_y = .795(4.5)/44.82 = .080$, $Y' = 4' - 2(.08) = 3.84'$
$\Sigma H = 1.2K$

$\alpha = ARCTAN(1.2/44.82) = 1.53°$

$q_a = 44.82/(3.84)(3.82) = 3.05$ KSF

$$q_u = \frac{(125)(17)(4.5)(1 - 1.53/90)^2 + .4(125)(3.82)(17)(1 - 1.53/90)^2}{1000}$$

$= 12.38$ KSF

$FS = 12.38/3.05 = 4.05 > 2.0$

SUBJECT RTS-Maint.

COMPUTATION OFFICE Area End Wall

COMPUTED BY SAG CHECKED BY DATE 6-14-89

8 LOAD CASE 8 DEAD + .5S + W

$\Sigma V = 26.91 + .5(10.3) - 4.27 + 9 + .75 = 37.54$ K

27.79 K

$\Sigma H_b = 1.81$ K

$\Sigma H_y = 1.59$ K

$e_b = 1.81(4.5)/37.54 = .217$, $B' = 4 - 2(.217) = 3.57'$

$e_y = 1.59(4.5)/37.54 = .190$, $Y' = 4 - 2(.190) = 3.62'$

$\Sigma H = 2.41$ K

$\alpha = \text{ARCTAN}(2.41/37.54) = 3.67°$

$q_a = 37.54/3.57(3.62) = 2.90$ KSF

$$q_u = \frac{125(17)(4.5)(1 - 3.67/90)^2 + .4(125)(3.57)(17)(1 - 3.67/90)^2}{1000}$$

$q_u = 11.60$ KSF

$FS = 11.60/2.9 = 4.0 > 2.0$ OK

SUBJECT RTS-Maint.
COMPUTATION Footing Reinforcement
COMPUTED BY SAG CHECKED BY DATE 6-6-89

Footing B Check D+S

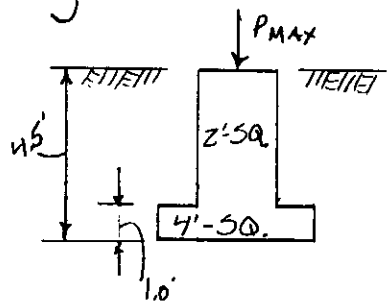


$P_{max} = 37.61K$
$DL = 25.79K$
$LL = 11.82K$
Col size = 24" x 24"
Footing Size = 4'SQ = 16 ft²
Footing Slab thickness = 12 IN

Factored Load $= 1.4(25.79) + 1.7(11.82) = 56.2K$ or 56200 lb.

factored load intensity $q_s = U/A_F = 56{,}200/16 = 3513$ psf

Shear Capacity

$d = 12" - (3 + .75/2) = 8.625"$

Shear @ d from Support Face

factored $V_u = 3513(4/2 - 2/2 - 8.625/12)4 = 3{,}952$ lb

$b_w = 4.0' = 48"$

$V_n = 3952/.85 = 4649$ lb. lb

available $V_c = 2\sqrt{f_c'}\, b_w d = 2\sqrt{3000}(48)(8.625) = 45{,}351$ lb OK

2-Way Action @ d/2

factored $V_u = 3513\left[16 - \left(\frac{24 + 8.625}{12}\right)^2\right] = 30{,}241$ lb.

$V_n = 30{,}241/.85 = 35{,}578$ lb.

$b_o = (24 + 8.625)(4) = 130.5$ IN

$V_c = 4\sqrt{f_c'}\, b_o d = 4\sqrt{3000}(130.5)(8.625) = 246{,}598$ lb OK

SUBJECT RTS - Maint.

COMPUTATION Footing Reinforcement

COMPUTED BY SAG CHECKED BY DATE 6-6-89

Moment Arm = 4/2 − 2/2 = 1'

Factored $M_u = 3513 \times 4 \left[\frac{(1)^2}{2}\right] = 7026$ FT-lb

or

84,312 IN-lb

$M_n = 84{,}312/.9 = 93{,}680$ IN-lb

$M_n = A_s f_y (d - a/2)$ Take $d - a/2 = .9d$

$93{,}680 = A_s \times 60{,}000 \times .9 \times 8.625''$

$A_s = .20$ IN²/72 IN band, $\rho = .2/48(8.625) = .0004$

Min = .0018(48)(8.625) = .74 IN²

4 - #6 bars EW. => As = 4(.44) = 1.76 IN² ok

Dowels

Min = 2.88 IN²

8 # 6 bar ok

SUBJECT RTS-Maint.

COMPUTATION 95% Submission

COMPUTED BY SAG CHECKED BY DATE 8-29-89

Additional Work for 95% Submission

# FTG. C DESIGN

SUBJECT RTS- Maintenance

COMPUTATION Footing TYPE C

COMPUTED BY SAG CHECKED BY DATE 8-8-89

Footing @ F4

Footing Type C

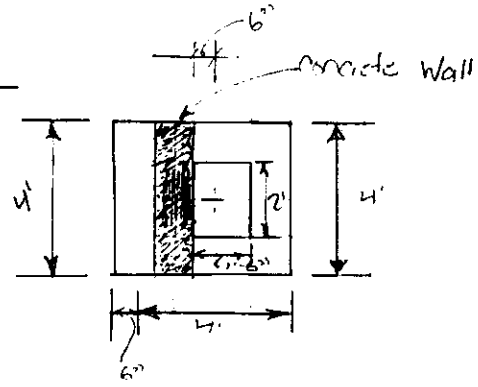


Calculate dead load from Tank Bay Column
(NON LOAD BEARING)

Column = 50. lb/ft (40') = 2000 lbs
Siding = 3.8 psf (26.42 X 20) = 2007.9 lbs

Calculate dead load from frame and wall above Footing

Roof above (1.42 + 2.42 + 1.0 + 8.5)(24.33/2)(4) = 649 lb.

Live load from Roof

Uniform : 37.8 psf (24.33/2)(4) = 1839.3 lb.
drift : $\left(\frac{146.1 - 37.8}{2}\right)(24.33/2)(4)$ = 2635 lb
4474.3 lb.

Frame DEAD LOAD

.83(1)(21.83/2)(150)(4) = 5,436. lb.
(1)(18.41)(150)(4) = 11,046. lb.
16,482 lb
5.5 psf (21.83/2)(4) = 240 lb
16,722 lb

Frame live load

20 psf (21.83/2)(4) = 873.2 lb.

SUBJECT RTS- Maintenance

COMPUTATION Footing Type C

COMPUTED BY SAG CHECKED BY DATE 8-8-89

Seismic Force @ Bottom

$.25(LL) = .25(873.2 + 4474.3) = 1337 lb$

$W = 1337 + 2000 + 2007 + 649 + 16,722 = 22,715 lb.$

$V = (.14)(.375)(1)(1.5)(22,715) = \underline{1789 \text{ lb}} \leftarrow$

Wind Load

$1331 \text{ psf}(26.42 \times 20) = 7033 \text{ lbs.} \rightarrow$

Add Internal Wall load

$10 \text{ psf}(4)(18.41) = \underline{736 \text{ lb}} \rightarrow$

$\underline{7769 \text{ lb}} \rightarrow$

uplift $= 20.48 \text{ psf}(4)(24.33/2) = \underline{996 \text{ lbs}}$

Footing Stability

Check
1. D+S
2. D+W
3. D+S+E
4. D+S+.5W
5. D+.5S+W

SUBJECT RTS-Maintenance
COMPUTATION Bearing Capacity Type C
COMPUTED BY SAG CHECKED BY DATE 8-8-89

## Bearing Capacity

LOAD Case : D+S

DEAD = 2000 + 2008 + 649 + 16,722 lb = 21,379 lb. ✓

Live = 4474.3 + 873.2 = 5,347 lb.

Effective Weight of Soil above base

$(2.5)(4.5)(4)(125/1000) = 5.625$ K

Wt of Concrete in Excess of Displaced Soil

$$\frac{[4.5(4)(1) + 2(1.5)(1.5) + 1(4)(1.5)]\,150-125}{1000} = .712 \text{ K}$$

$\Sigma V = 21.4K + 5.35K + 5.625 + .712 = 33.1$ K

$$q_a = \frac{33.1 \text{ K.}}{4(4.5)} = 1.83 \text{ KSF}$$

$$q_u = \frac{(125)(2.5)(17) + 0.4(125)(6)(17)}{1000} = 10.4 \text{ KSF}$$

FS = 10.4 / 1.83 = 5.68 > 2.0 OK

Check Eccentricities of Loads (using 4000 psf allowable.)

$$x = M/V = \frac{4008(2) + 22,718(3) + [1(4)(1.5)(3) + 2(1.5)(1.5)1.75 + 4.5(4)1(2.25)]150}{31,001}$$

$x = \frac{86126}{31,001} = 2.78'$ $e = 4.5/2 - 2.78 = .53'$

$$P/A + \frac{VEC}{I} = \frac{31,001}{4.5(4)} + \frac{31001(.53)(2.25)}{30 \text{ ft}^4}$$

$= 1722 + 1232$ psf $= 2954$ psf $< 4000$ ok

$I = 1/12(4)(4.5)^3 = 30.375$ ft 4

SUBJECT RTS- Maintenance

COMPUTATION Bearing Capacity Type C

COMPUTED BY SAG CHECKED BY DATE 8-8-89

LOAD CASE: D + W

$V = 21,379 - 996 = 20,383$ lb

$\Sigma V = 20.4K + 5.625 + .712K = 26.74K$

$\Sigma H = 7769$ lb. or $7.8K$

$e_b = 7.8(2.5)/26.74 = .73$

$B' = 4.5 - 2(.73) = 3.04'$

$\alpha = \text{ARCTAN}(7.8/26.74) = 16.26°$

$q_a = 26.74/3.04(4.0) = 2.19$ KSF

$$q_u = \frac{(125)(2.5)(17)(1 - 16.26/90)^2 + 0.4(125)(3.04)(1 - 16.26/30)^2(17)}{1000}$$

$$q_u = \frac{3566 + 542.0}{1000} = 4.12 \text{ KSF}$$

$FS = 4.12/2.19 = 1.88 < 2.0$ NG

TRY 5' base

Weight above base $= 5(4)(2.5)(125)/1000 = 6.25K$

Weight of Concrete in excess of Displaced soil

$$\frac{[5(4)(.1) + 2(1.5)(1.5) + 1(4)(1.5)]\,150 - 125}{1000} = .762K$$

$\Sigma V = 20.4 + 6.25 + .762 = 27.41K$

$\Sigma H = 7.8$

$e_b = 7.8(2.5)/27.41 = .71'$

$B' = 5 - 2(.71) = 3.52'$

$\alpha = \text{ARCTAN}(7.8/27.41) = 15.88°$

SUBJECT RTS - Maintenance

COMPUTATION Bearing Capacity Type C

COMPUTED BY SAG CHECKED BY DATE 8-8-89

$q_a = 27.41 / 3.52(4.0) = 1.95$ KSF

$$q_u = \frac{(125)(2.5)(17)(1 - 15.88/40)^2 + .4(125)(3.52)(1 - 15.88/60)^2 17}{1000}$$

$q_u = 4.26$ KSF

$FS = 4.26 / 1.95 = 2.18 > 2.0$ ok

3. LOAD CASE: D + S + E
(USE .75 SNOW LOAD for S)

$V = 21379 + .75(4474 + 873) = 25{,}389$

$\Sigma V = 25.4 + 6.25 + .762 = 32.41$ K

$\Sigma H = 178$ [illegible] K

$e_t = 1.8(2.5)/32.41 = .17'$

$E' = 5 - 2(.17) = 4.72'$

$\alpha = \text{Arctan}(1.8/[\text{illegible}]) = 2.18°$

$q_a = [\text{illegible}] = 1.72$ KSF

$$q_u = \frac{[\text{illegible}]}{1000}$$

$q_u = 8.15$ $FS = 8.15/1.72 = 4.74 > 1.5$ ok

SUBJECT RTS- Maintenance

COMPUTATION Footing Type C

COMPUTED BY SAG CHECKED BY DATE 8-8-89

4. LOAD CASE: D + S + .5W

$V = 21.4 + 5.35 = 26.75$ K  $26.75 - (.5)(.996) =$

$\Sigma V = 21.4 + 5.35 + 6.25 + .762 - .5(.996) = 33.26$ K

$\Sigma H = .5(7.8) = 3.9$ K

$eb = 3.9(2.5)/33.26 = .293'$

$B' = 5 - 2(.293) = 4.41$

$\alpha = ARCTAN(3.9/33.26) = 6.7°$

$q_a = 33.26/4.41(4) = 1.88$ KSF

$q_u = \frac{125(2.5)(17)(1 - 6.7/90)^2 + 0.4(125)4.41(1 - 6.7/30)^2 17}{1000}$

$= 6.8$ KSF  $FS = 6.8/1.88 = 3.62 > 2.0$ ok

5. LOAD CASE 3 D + .5S + W

$V = 21,379 + .5(5,347) = 24.05$

$\Sigma V = 24.05 + 5.625 + .712 - .996 = 29.39$ K

$\Sigma H = 7.8$ K

$eb = 7.8(2.5)/29.39 = .66'$

$B' = 5 - 2(.66) = 3.68$

$\alpha = ARCTAN(7.8/29.39) = 14.86°$

$q_a = 29.39/3.68(4) = 2.0$ KSF

$q_u = \frac{125(2.5)(17)(1 - 14.86/90)^2 + 0.4(125)3.68(1 - 14.86/30)^2 17}{1000}$

$= 4.5$ KSF  $FS = 4.5/2.0 = 2.25 > 2.0$ ok

SUBJECT RTS Maintenance
COMPUTATION Footing - Type C
COMPUTED BY SAG CHECKED BY DATE 8/15/89

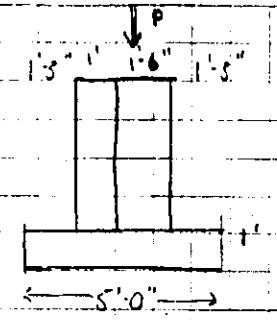


$P = 1.4(DL) + 1.7(LL)$ square
$= 1.4(21379) + 1.7(5347)$
$= 39020.50$

$q_s = 39020.50/4*5 = 1951$ psf

Shear capacity:

$d = 12" - (3 + 1/2) = 8.5"$

Factored $V_u = 1951(5/2 - 1/2 - \frac{8.5}{12})(5) = 12600$ lb

$V_n = 12600/.85 = 14824$ lb

$V_c = 2\sqrt{f'_c}\, b_w d = 2\sqrt{3000}(8.5)(60) = 55,867$ lb okay

2 way action @ d/2

Factored $V_u = 1951[20 - (\frac{12+8.5}{12})^2] = 33,326$ lb

$V_n = 33326/.85 = 39207.3$ lb

$b_o = (12+8.5)(4) = 82$

$V_c = 4\sqrt{f'_c}\, b_o d = 4\sqrt{3000}(8.5)(82) = 152705$ lb okay

Bending Moment

Moment Arm $= (5/2 - 1/2) = 2.0'$

Factored $M_u = 1951[5(\frac{2^2}{2})] = 19510$ lb ft $= 234120$ lb in

$M_n = 234120/.9 = 260133$ lb in

$M_n = A_s f_y (d - a/2)$ $260133/60000(8.5 - a/2) = 0.5667$ in$^2$

$a = \frac{0.5667(60000)}{0.85(3000)(60)} = 1.5688$

$A_s = 260133/60000(8.5 - 1.5688/2) = 0.562$ in$^2$ $\rho = 0.562/8.5(60) = 0.0011$

min $= 0.0018(60)(8.5) = 1.026$ in$^2$/60 in

USE = 6 @ 12 okay ($A_s = 2.2$ in$^2$)

# DESIGN OF DEEP FOOTING

## Col. line F-8

Critical Load Cases

D+S
D+W
D+S+A
D+.5W+A

Computer Check LC - D+.5W+A

SUBJECT RTS - Maintenance

COMPUTATION Footing - DEEP Footing Calculation

COMPUTED BY SAG CHECKED BY DATE 8-8-89

Check Footing @ Col line F-8

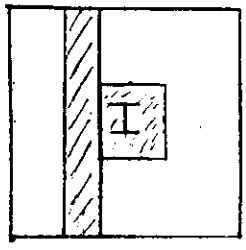

DEAD LOAD REACTIONS

FROM TANK BAY FRAME

$R = 7.69psf(34)(22.088/2) + 3.8(34.8-14.7)(17.33/2)$
$+(1.42+1.2+1.0+5.5)(36.375)(22.088/2) + 300$
$+ 230(29) + 116(36.375) + 60/3(22.088/2)$
$+ 162(22.088/2) + 77(3.5)$
$+ [1(4) + (2)(1)](22.083/2)150$

$= 2888 + 661 + 3664 + 300 + 6670 + 4219 + 221$
$+ 1789 + 270 + 993.7$ lb

$= 30,619$ lb

FROM FRAME & Roof (6' SPAN)

Roof Above $= (1.42 + 2.42 + 1.0 + 8.5)(24.33/2)(6) = 973$ lb.

FRAME DEAD LOAD

$.83(1)(21.83/2)150(6) = 8153$
$(1)(18.41)(150)(6) = 16,569$
$5.5(21.83/2)(6) = 360$
25,082 lb. or 25.1K

SUBJECT RTS - Maintenance

COMPUTATION Footing

COMPUTED BY SAG CHECKED BY DATE 8-8-89

Live loads

SNOW @ Tank Area = 37.8(36.375)(22.088/2)
= 15,185 lbs

Snow @ Frame Roof
uniform = 37.8(24.33/2)(6) = 2759 lbs.
drift = $\left(\frac{146.1 - 37.8}{2}\right)$(24.33/2)(6) = 3952 lbs
6711 lbs.

Live load @ Frame Roof = 20 psf(21.83/2)6 = 1310 lbs

Wind Loads

$R_{Hx}$ = (186 plf)24 + 208(36.88) sin 9.46° = 7585

$R_V$ = 208(36.88) cos 9.46° = 7566 lbs

$R_{Hy}$ = 18.42 psf(9.[illegible]) [illegible] = 3637 lb.
+ 10 psf (13.58)(6) = [illegible]
[illegible] lb.

Check the Following Critical load Cases

1. DEAD + SNOW
2. DEAD + WIND
3. DEAD + SNOW + A
4. DEAD + .5 WIND + A

SUBJECT RTS-MAINT

COMPUTATION

COMPUTED BY SAG CHECKED BY DATE 8-8-89

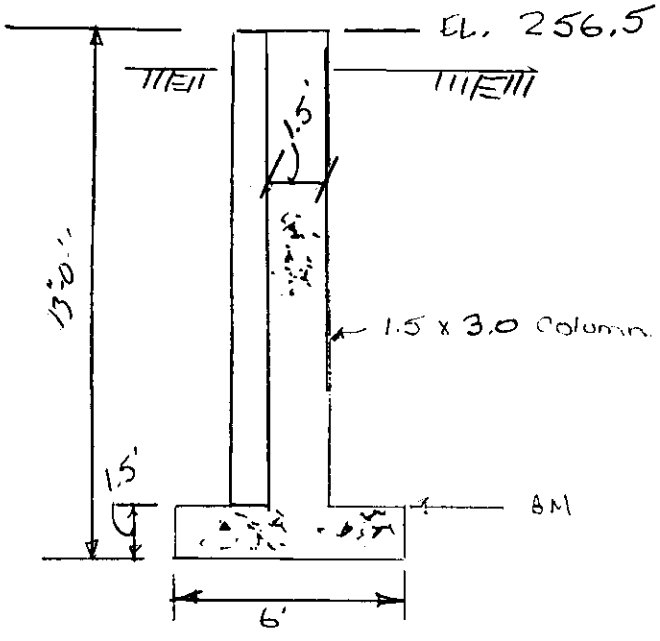


LOAD CASE: D+S

DEAD LOAD = 30.619 + 25.1 = 55.72 Kips

Live load = 15.2 + 6.7 + 1.3 = 23.2 Kips

Effective weight of Soil above base

12.5(6)(6)(125/1000) = 56.25 Kips

wt of Concrete in Excess

$$\frac{[6\times6\times1.5 + 2(1.5)(11.5) + 1(6)11.5]\,150-125}{1000} = 3.31 \text{ Kips}$$

$\Sigma V = 55.72 + 23.2 + 56.25 + 3.31 = 138.5$ Kips

$q_a = 138.5/(6)(6) = 3.85$ KSF

$$q_u = \frac{125(12.5)(17) + 0.4(125)(6)(17)}{1000} = 31.66 \text{ KSF}$$

FS = 31.66/3.85 = 8.22 > 20 ok

SUBJECT RTS-Maintenance
COMPUTATION Footing
COMPUTED BY JAG CHECKED BY DATE 8-8-89

LOAD CASE: DEAD + WIND

$V = 55.72 - 7.57 = 48.18$

$\Sigma V = 48.18 + 56.25 + 3.31 = 107.74\ K$
$\Sigma H_b = 7.58K$
$\Sigma H_y = 4.45K$

$\Sigma H = \sqrt{7.58^2 + 4.45^2} = 8.789$ $\quad \alpha = \text{Arctan}\frac{\Sigma H}{\Sigma V} = \text{Arctan}\frac{8.789}{107.74} = 4.66°$

$e_B = 7.58(13)/107.74 = 0.91$ $\quad B' = 6 - 2(.91) = 4.18\ ft$

$e_L = 4.45(13)/107.74 = .54$ $\quad L' = 6 - 2(.54) = 4.92\ ft$

$$q_u = \frac{[1.25(12.5)(17)](1 - \frac{4.66}{90})^2 + 0.4(125)(4.18)(17)(1 - \frac{4.66}{30})^2}{1000}$$
$= 23.88 + 2.53 = 26.41\ \text{Kips}^2$

$q_a = 107.74/(4.18)(4.92) = 5.24\ KSF$

$F.S. = 26.41/5.24 = \underline{5.04 > 2.0}$ okay

SUBJECT RTS- Maintenance
COMPUTATION Footing
COMPUTED BY SAG CHECKED BY DATE 8-8-89

LOAD CASE: DEAD + .5WIND + 1

$V = 55.72 - (.5)(7.57) + 74.36 = 126.29$

$\Sigma V = 126.29 + 56.25 + 3.31 = 185.85$ K

$\Sigma H_b = 11.02 + .5(7.58) = 14.81$ K

$\Sigma H_y = 5.13 + .5(4.4) = 7.33$ K

$\Sigma H = \sqrt{14.81^2 + 7.33^2} = 16.52$ $\alpha = \text{ARCTAN } 16.52/185.85 = 5.08°$

$e_B = 14.81(13.0)/185.85 = 1.03'$ $B' = 6 - 2(1.03) = 3.94$

$e_L = 7.33(13.0)/185.85 = .51$ $L' = 6 - 2(0.51) = 4.98$

$q_u = [1.25(125)(17)](1 - \frac{5.1}{90})^2 + [0.4(125)(0.94)(17)](1 - \frac{5.1}{30})^2$

$= 23{,}637 + 2{,}307 = 25{,}944 = 25.94$ KSF

$q_a$ $185.85/(3.94)(4.98) = 9.47$ KSF

F.S. $= 25.94/9.47 = 2.74 > 2.0$ Okay

SUBJECT RTS- Maint.
COMPUTATION Footing
COMPUTED BY SAG CHECKED BY DATE 8-8-89

LOAD CASE: DEAD + SNOW + A
using (.75S)

$V = 55.72 \text{ Kips} + .75(23.2) + 74.36 = 147.5 \text{ K}$

$\Sigma V = 147.5 + 56.25 + 3.31 = 207.06 \text{K}$

$\Sigma H = 11.02 \text{ K}$ $\alpha = \text{Arc tan} \frac{11.02}{207.1} = 3.04°$

$e_B = 13'(11.02)/207.06 = .692$ $B' = 6 - 2(0.692) = 4.62$

$$q_u = \frac{\{125(12.5)(17)\}(1 - \frac{3.04}{90})^2 + \{0.4(125)(4.62)(17)\}(1 - \frac{3.04}{30})^2}{1000}$$

$= 24.80 + 3.17 = 27.97 \text{ KSF}$

$q_a = 207.06/(4.62)(6) = 7.47 \text{ KSF}$

F.S. $= 27.97/7.47 = 3.74 > 2.0$ ok

CBEAR/PC - BEARING CAPACITY ANALYSIS
FOUNDATION AND SOIL DESCRIPTIONS

* FOUNDATION GEOMETRY WIDTH = 6.00 LENGTH = 6.00

| LEFT SIDE: ELEV. (ft) | X-COORD. (ft) | RIGHT SIDE: ELEV. (ft) | X-COORD. (ft) |
|---|---|---|---|
| 0.00 | 0.00 | 0.00 | 6.00 |

FOUNDATION TYPE : FINITE PRESSURE TYPE : GROSS

* SOIL DATA

| LEFT SIDE: ELEV. (ft) | X-COORD. (ft) | RIGHT SIDE: ELEV. (ft) | X-COORD. (ft) |
|---|---|---|---|
| 12.50 | 0.00 | 12.50 | 6.00 |

| FRICTION ANGLE (deg) | COHESION (psf) | UNIT WEIGHT MOIST (pcf) | UNIT WEIGHT SATURATED (pcf) |
|---|---|---|---|
| 30.00 | 0.00 | 125.00 | 125.00 |

LOAD CASE : D+.5W+A

# CBEAR/PC - BEARING CAPACITY ANALYSIS

## * SURCHARGE DESCRIPTION

| LAYER NO. | SURFACE ELEVATION (ft) | UNIT WEIGHT MOIST (pcf) | UNIT WEIGHT SAT. (pcf) |
|---|---|---|---|
| 1 | ******* | *** | *** |
| 2 | ******* | *** | *** |

## * SUBSOIL DESCRIPTION

| ELEVATION (feet) | FRICTION ANGLE | COHESION (psf) | UNIT WT. MOIST | UNIT WT. SAT. |
|---|---|---|---|---|
| ******* | *** | *** | *** | *** |

## * WATER TABLE DESCRIPTION

WATER TABLE ELEVATION : ***** (ft)

UNIT WEIGHT OF WATER : ***** (pcf)

## * APPLIED LOAD DESCRIPTION

| | | | |
|---|---|---|---|
| APPLIED LOAD | : | 185.8 | (kips) |
| X-COORD. of LOAD | : | 2.0 | (ft) |
| Z-COORD. of LOAD | : | 2.5 | (ft) |
| ANGLE of INCLINAT. | : | 5.1 | (deg.) |

CBEAR/PC - BEARING CAPACITY ANALYSIS
Using Meyerhof (1963)

* EFFECTIVE BASE DIMENSIONS : WIDTH = 4.00000 LENGTH = 5.00000

*** SUMMARY OF BEARING CAPACITY FACTORS ***

| FACTORS | C | Q | G | BEARING CAPACITY (kips/ft**2) | |
|---|---|---|---|---|---|
| BEARING CAP. | 30.1396 | 18.4011 | 15.6680 | 34.6272 | |
| SHAPE - CONC. | 1.00000 | 1.00000 | 1.00000 | 34.6272 | NOT SEL |
| SHAPE ECC. | 1.00000 | 1.00000 | 1.00000 | 32.6687 | NOT SEL |
| INCLINATION | 0.89029 | 0.89029 | 0.69000 | 28.3003 | NOT SEL |
| BASE TILT | 1.00000 | 1.00000 | 1.00000 | 28.3003 | SELECTE |
| GROUND SLOPE | 1.00000 | 1.00000 | 1.00000 | 28.3003 | NOT SEL |
| EMBEDMENT | 1.00000 | 1.00000 | 1.00000 | 28.3003 | NOT SEL |

| | FNC | + | FNQ | + | FNG | = | Q |
|---|---|---|---|---|---|---|---|
| COMBINE EFFECTS of FACTORS | 0.00000 | | 25.5976 | | 2.70276 | | 28.3003 |

Since $Q = 28.3 > q_u$ ok
Comp

$Q_{calc} = 25.94$

Bearing Capacity for combined footing
EF-1

SUBJECT RTS - Maintenance
COMPUTATION Footing Design
COMPUTED BY SAG CHECKED BY DATE 8-2-89

## Calculate Loads on the Combined footing EF-1

### Live loads

Uniform Snow Load = (37.8 psf)(559.01 ft²) = 21,131 lb
drift = $\left(\frac{146.1-37.8}{2}\right)$(157.38 ft²) = 8,522 lb

29,653 lb.

### DEAD LOADS (See page 35)

$$
\begin{aligned}
R_V = {} & 7.69\,psf(34)(22.088/2) + 3.8(34.8-14.7)(17.33/2) \\
& + 3.3(13.58)(23.33/2) + (1.42+1.2+1.0+5.5)(36.375) \\
& (22.088/2) + 200 + (1.42+2.42+10+8.5)(25.875/2) \\
& (24.33/2) + 230(29) + 116(36.375) + 50(25/2) \\
& + 60/3(22.088/2) + 162(22.088/2) + 77(3.5) \\
& + [1(4)+2(1)]\left(\frac{22.088}{2}+\frac{23.33}{2}-6\right)(150) \\
& + 3(13.58)(1)(150) \\
= {} & 2888 + 662 + 602 + 3664 + 200 + 2100 + \\
& 6670 + 4219 + 625 + 221 + 1789 + 270 \\
& + 15038 + \\
= {} & \underline{45{,}059 \text{ lb.}}
\end{aligned}
$$

### Wind Loads

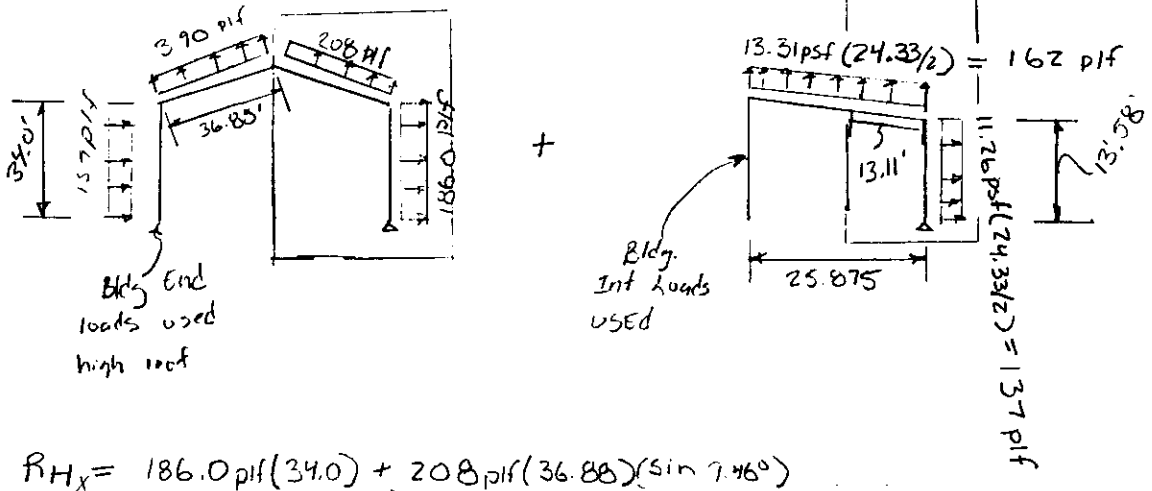


$R_{H_X}$ = 186.0 plf(34.0) + 208 plf(36.88)(sin 9.46°) + 137(13.58) + 162(13.11) sin 9.46° = **9794 lbs** ←

$R_V$ = (208)(36.88) cos 9.46° + 162(13.11) cos 9.46° = **9661 lbs** ↓

SUBJECT RTS-Maintenance

COMPUTATION Footing Design

COMPUTED BY SAG CHECKED BY DATE 8-8-89

Calculate loads on Combined footing EF-1

Wind Loads Continued

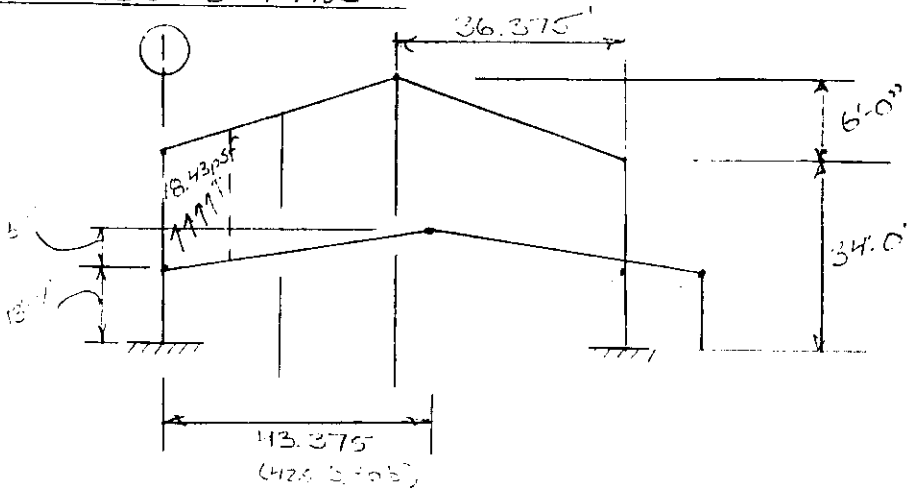


$R_{Hy}$ = 18.43 psf (9.665)(34 − 13.58) = 3637 lb.

Conservatively add internal wind load on wall

10 psf (13.58')(3') = 407 lb

$R_{Hy}$ Total = 4044 lb.

Foundation Analysis

Check Footing for Extreme load Cases

1. DEAD + SNOW + A
2. DEAD + WIND
3. DEAD + .5 WIND + A

SUBJECT RTS-Maintenance

COMPUTATION Footing Design

COMPUTED BY JAG CHECKED BY DATE 8-8-89

LOAD CASE: DEAD + WIND

$V = 45.06 - 9.66 = 36.4K$

$\Sigma V = 36.4 + 20.25 + 1.95 = 58.6K$

$\Sigma H_b = 9.8K$, $\Sigma H_y = 4.0K$ $H = \sqrt{(9.8)^2 + (4.0)^2} = 10.58K$

$$e_b = \frac{9.8(4.5) + 6(1)}{58} = .86$$

$$e_y = \frac{4.0(4.5)}{58.6} = .307$$

$B' = 6 - 2(.86) = 4.28'$, $Y' = 6 - 2(.307) = 5.39'$

$\alpha = \text{ARCTAN}(\Sigma H / \Sigma V) = \text{ARCTAN}(10.58/58.6) = 10.23°$

$q_a = 58.6/(4.28)(5.39) = 2.54$ KSF

$$q_u = \frac{(125)(4.5)(17)(1 - 10.23/90)^2 + 0.4(125)(4.28)(17)(1 - \frac{10.23}{30})^2}{1000}$$

$q_u = 9.09$ KSF

$FS = 9.09/2.54 = 3.57 > 2.0$ OK.

SUBJECT RTS - Maintenance

COMPUTATION Footing Design

COMPUTED BY SAG CHECKED BY DATE 8-8-89

$\gamma_m = 125$ pcf, $\phi = 30°$, $C = 0$

Load Case: DEAD + SNOW + A.

$\Sigma H = 11.02$ K

$V = 45.059 + .75(29.65) + 74.36 = 141.65$ K

Effective weight of Soil above base =
$(6)(6)(4.5)(125/1000) = 20.25$ K

Wt of Conc. in Excess of Displaced Soil

$$\frac{[(6)(6)(1.5) + 2(3)(3) + 1(2)(3)]\,150-125}{1000} = 1.95\text{ K}$$

$\Sigma V = 141.65 + 20.25 + 1.95 = 163.85$ K

$$e_b = \Sigma M / \Sigma V = \frac{11.02(4.5) + 6(1)}{163.85} = .339$$

$B' = 6 - 2(.339) = 5.32'$

$\alpha = \text{ARCTAN}(11.02/163.85) = 3.85°$

$q_a = 163.85/(5.32)(6) = 5.13$ KSF

$$q_u = \frac{(125)(4.5)(17)(1 - 3.85/90)^2 + 0.4(125)(5.32)(17)(1 - 3.85/30)^2}{1000}$$

$q_u = 12.19$ KSF

$FS = 12.19\text{ KSF}/5.13\text{ KSF} = 2.38 > 2.0$ OK.

SUBJECT RTS - Maintenance
COMPUTATION Footing Design
COMPUTED BY SAG CHECKED BY DATE 8-8-89

Load Case: DEAD + .5 WIND + A

LOADS FROM CRANE

$V = 74.36$ K
$H_b = 11.02$ K
$H_y = .1(51.3) = 5.13$ K

$\therefore V = 45.06 - 9.66 + 74.36 = 109.76$
$\Sigma V = 109.76 + 20.25 + 1.95 = 132$ Kips.

$\Sigma H_b = 11.02K + .5(9.79) = 15.91$ K
$\Sigma H_y = 5.13 + .5(4.0) = 7.13$ K

$H = \sqrt{(15.91)^2 + (7.13)^2} = 17.43$ K

$e_b = \dfrac{15.91(4.5) + 6(1)}{132} = .59'$ $B' = 6 - 2(.59) = 4.82'$

$e_y = \dfrac{7.13\ K(4.5)}{132} = .24$ $Y' = 6 - 2(.24) = 5.52'$

$\alpha = ARLTAN(17.43/132.0) = 7.52°$

$q_a = 132.0 / (4.82)(5.52) = 4.96$ KSF

$$q_u = \frac{(125)(4.5)(17)(1 - 7.52/90)^2 + 0.4(125)(4.82)(17)(1 - 7.52/30)^2}{1000}$$

$q_u = 10.33$

$FS = 10.33/4.96 = 2.08 > 2.0$ o.k

# Concrete Frame — Wall

SUBJECT RTS-Maintenance
COMPUTATION Concrete Frame — Wall
COMPUTED BY SAG CHECKED BY DATE 8-7-89

Wall & FRAME Along Column line E

Calculate loads per linear Feet of Wall

Live/Snow Load

UNIFORM: 37.8 psf (24.33/2) = 460 lb/LF
DRIFT: $\left(\frac{146.1-37.8}{2}\right)$ 24.33/2 = 659 lb/LF
1119 lb/LF

DEAD Load

Roof (1.42 + 2.42 + 1.0 + 8.5)(24.33/2) = 162 lb/LF
Roof Fan = 300 lb/LF
462 lb/LF

Wind

Exterior Windward = 13.31 lb/FT
Exterior Leeward = −3.07 lb/FT
16.38 lb/FT

Inter Windward = +10 lb/FT
Inter leeward = −10 lb/FT
20.0 lb/FT

Uplift = −20.48 psf (24.33/2) = −249 lb/LF

Seismic force subjected to Concrete Frame/wall

V = Z I K CS W

CS = .14
K = 1.0
I = 1.5
Z = 3/8

W = Total dead load + 25% Snow load

.25 (1119 lb/ft) = 280 lb/FT

.25 (21.83)(20 lb/ft²) = 109 lb/FT

389

SUBJECT RTS- Maintenance

COMPUTATION Concrete Frame -Wall

COMPUTED BY SAG CHECKED BY DATE 8-7-89

Frame

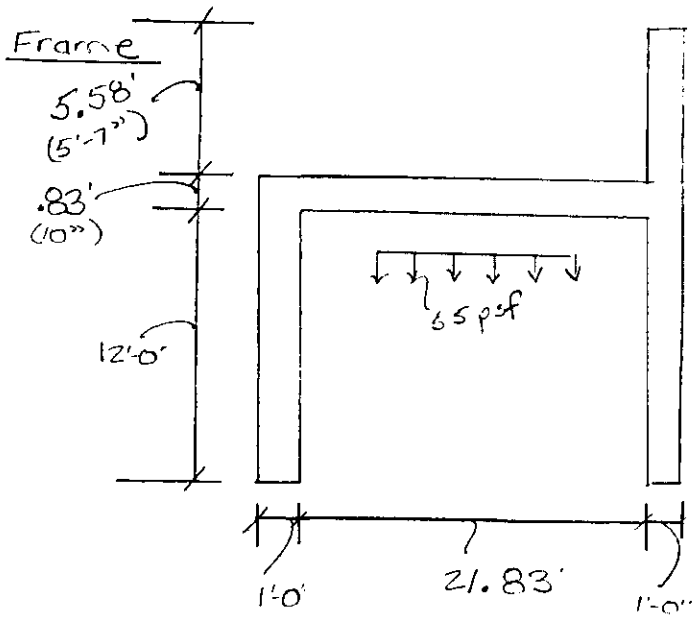


$$W = 389 + 462 + 5.5(21.83) + .83(1)(21.83)(150\ lb/ft^3) + (1')(12.83 + 18.41)(1)(150\ lb/ft^3)$$

$$= 389 + 462 + 120 + 2717 + 4686 = 8374\ lb$$

$$V = (.14)(.375)(1)(1.5)(8374) = \underline{\underline{659\ lb}} \leftarrow$$

Wall

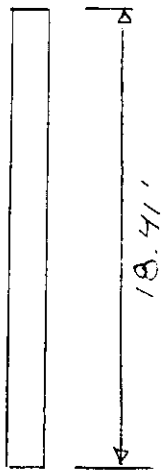


$$W = 280 + 462 + 18.41(1)(1)(150)$$
$$= 3503\ lbs$$

$$V = .14(.375)(1)(1.5)(3503) = \underline{\underline{276\ lb}} \leftarrow$$

SUBJECT RTS-Maintenance

COMPUTATION Concrete Frame-Wall

COMPUTED BY SAG CHECKED BY DATE 87-89

## FRAME LOAD CASES

**LC-1 : DL + LL**

P= 1119 + 462 = 1581 lb.

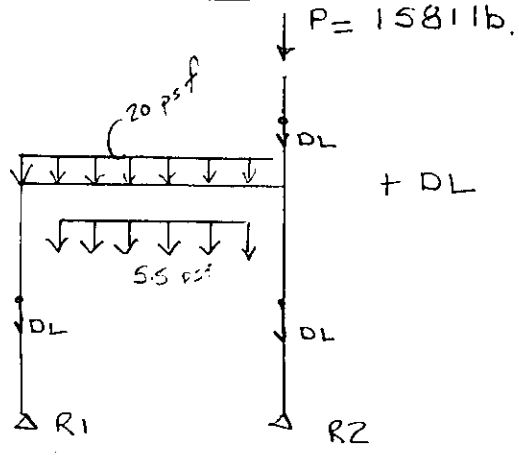


**LC-2 : DL + WL**

DL= 462 - 249 = 213 lbs

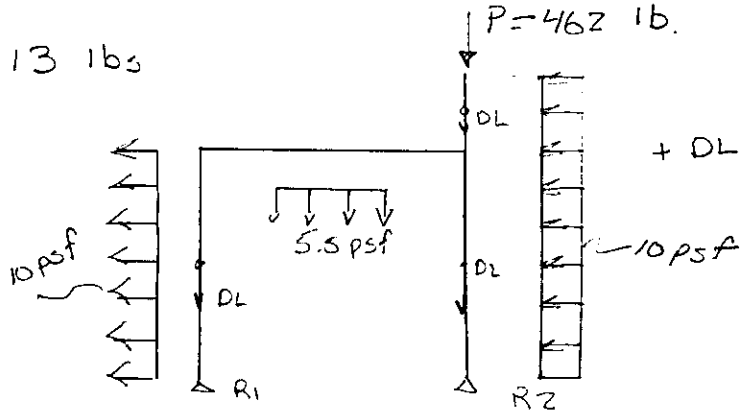


**LC-3 : DL + E**

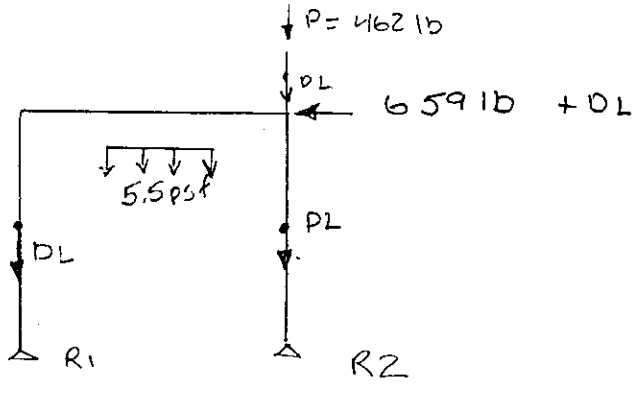

SUBJECT RTS - Maintenance

COMPUTATION Concrete Frame - Wall

COMPUTED BY SAG CHECKED BY DATE 8-7-89

LC-4: DL + .25SL + E

P = 389 + 462 = 851 lbs

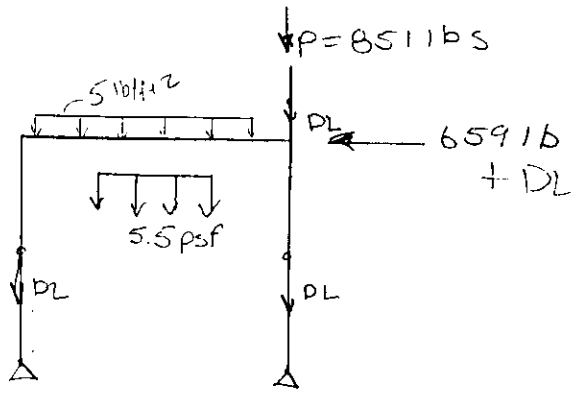


LC-5: DL + SL (or LL) + .5W

P = 1581 - (249).5 = 1456.5

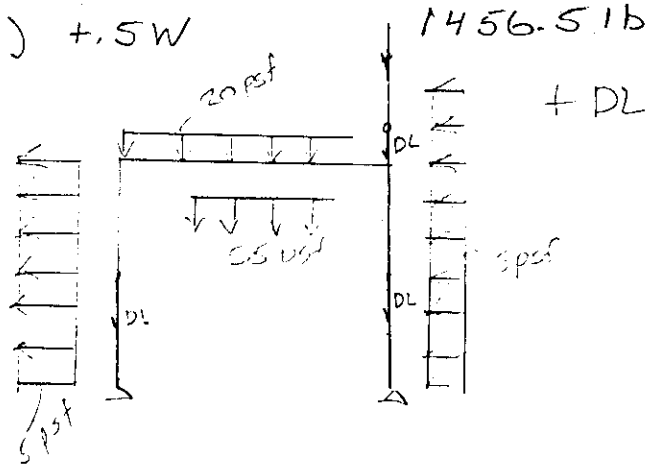


LC-6: DL + .5 SL + W

P = .5(1119) + 462 - 249 = 772 lbs

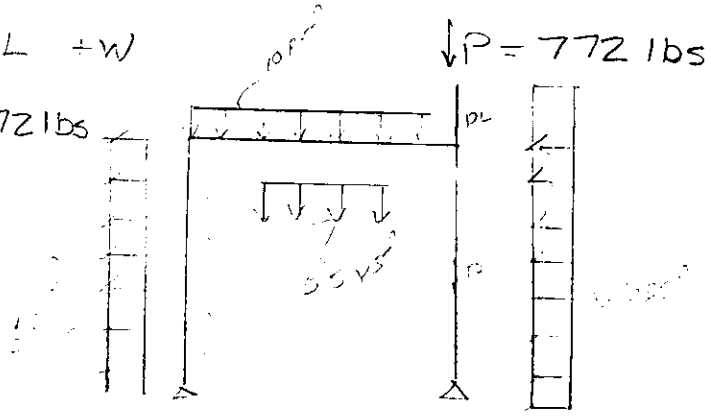

SUBJECT RTS - Maintenance

COMPUTATION Concrete Frame - Wall

COMPUTED BY SAG CHECKED BY DATE 8-7-89

Wall

LC 1 - DL + SL

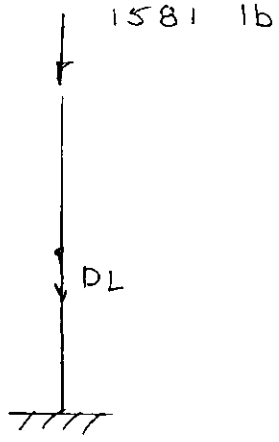


LC 2 - DL + WL

P = 462 - 249 = 213 lb.

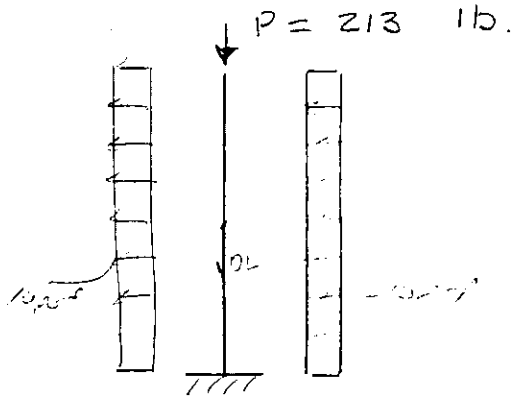


LC 3 - DL + LL + WL

P = 1119 + 462 - 249 = 1332 lb

LC4 DL + LL + WL

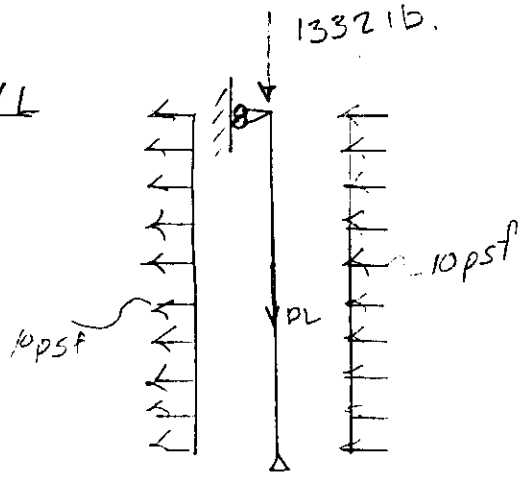

RTS. - Maintenance

AR 190-11 "Physical Security of Arms, Ammunition, and Explosives", March, 1986

Category II Arms "Structural Criteria"

A. Walls — No 4 bars, @ 9" O.C. staggered on each face to form a grid of 4½ inches square. 8 inch wall.

B. Ceilings, Roofs — No 4 bars min., area of opening does not exceed 96 $IN^2$

C. Floors — Min 6" of concrete reinforced by 6 x 6 — W4/W4

D. Doors — Constructed of 1¾" thick solid or laminated wood w/ 12-gauge steel plate on the outside face or std. 1¾" thick hollow metal, Industrial type w/min 14 gauge skin plate thickness and internal stiffners @ 6" O.C

SUBJECT R.T.S. - Maint

COMPUTATION Concrete design per WSD

COMPUTED BY SAG CHECKED BY DATE 10-16-89

Note: Structural Design must also conform to requirements of AR 190-11 "Physical Security of Arms, Ammunition, and Explosives", March 1986.

See Computer runs at end of Section for maximum design moments.

Concrete: $f_c' = 3000$ psi, $f_c = .45 f_c' = 1350$
$f_s = 24{,}000$ psi (grade 60) $a = 1.76$
$j = .886$, $R = 204$

Top Slab

$d = 10'' - 2'' - .5(.875) = 7.56$ IN

$Req\ d = \sqrt{M/Rb}$ $-M = 10.28$ FT-K or 10280 FT-lb.

$= \sqrt{\frac{10280 \times 12}{204 \times 12}} = 7.1'' < 7.56''$ ok

$A_s = \frac{M}{f_s\, j\, d} = \frac{10280 \times 12}{24{,}000 \times .886 \times 7.56} = .767$ IN$^2$

#7 @ 9" O.C. ($A_s = .8$ IN$^2$)

$+M = 3.3$ FT-K $< 10.28$ FT-K ok

$v = \frac{1946 \text{ lbs}}{12(7.56)} = 21.45 < 1.1\sqrt{f_c'} = 60$ ok

$\rho_{min} = .0033 < \rho = .0067 < \rho_{max} = .016$ ok

Horiz. Min $= 0.0018(12)(10) = .216$ IN$^2$
#4 @ 9" $A_s = .267$ IN$^2$ ok

Area of opening $= 81$ IN$^2 < 96$ IN$^2$ AR 190-11 ok

Column

$M_{max} = 10.28$ FT-K or 10280 FT-lb

$d = 12'' - 2'' - .5(.75) = 9.625''$

$A_s = \frac{10280 \times 12}{24{,}000 \times .886 \times 9.625} = .603$ IN$^2$

Use #6 @ 9" O.C., $A_s = .59$ IN$^2$

Horizontal: Use #4 @ 9" O.C. (AR 190-11)

Wall

$M_{Max} = 8.473$ FT-K < 10.28 FT-K

#6 @ 9" O.C. OK

$v = \frac{1841}{12(7.56)} = 20.29$ Kips < 60 Kips OK

LC #4

Maximum Moment Diagram

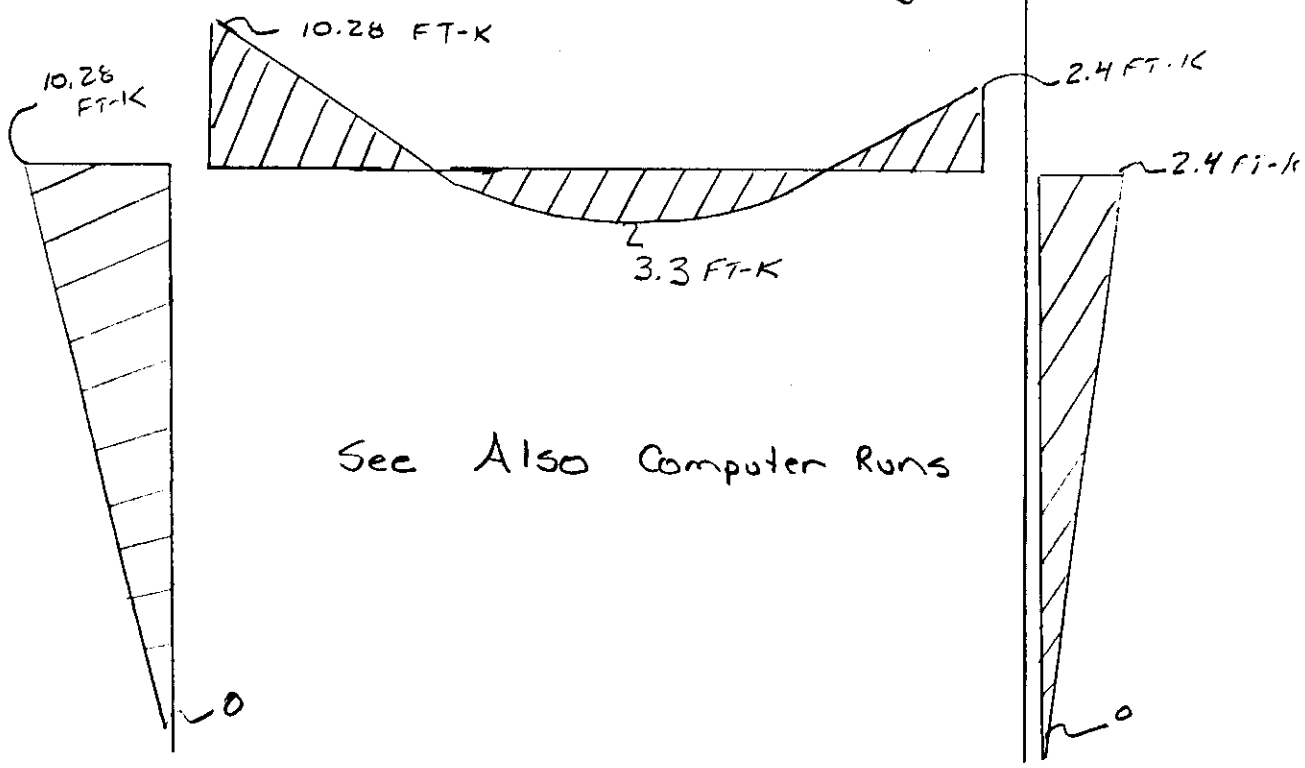


See Also Computer Runs

27 Sept 49

SUBJECT RTS-Maint

COMPUTATION Sketch of Frame

COMPUTED BY SAG

CHECKED BY

DATE 10-16-69

CORPS OF ENGINEERS, U.S. ARMY

PAGE 104

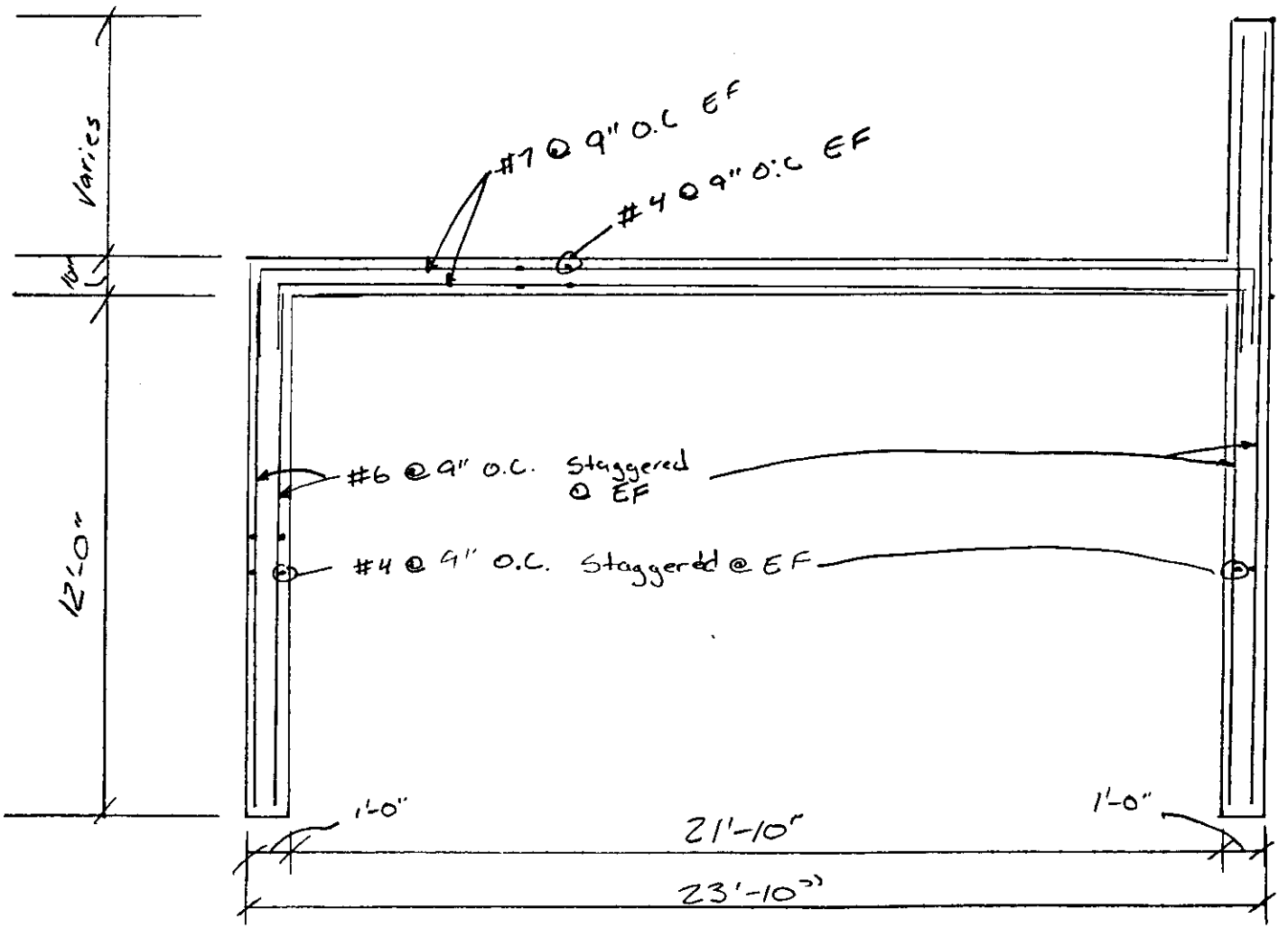

SUBJECT RTS Maintenance

COMPUTATION Arms Room

COMPUTED BY _____ CHECKED BY _____ DATE 8/9/89

## Footing Stability Calcs. for Wall & Frame

Frame 2'-6" footing

$\gamma_m = .125$ $N_q = N_\gamma = 17$ $\phi = 30°$ $c = 0$

Eff wt of soil above Base = 0.9375

Wt of Conc. in Excess of Displaced Soil = 0.1125

$q_u$ = 6.6875 ksf

LC #4 $\Sigma V = 3.746 + .1125 + .9375 = 4.796$

$\Sigma H = 0.857$

$e_o = .857(2.5)/4.796 = 0.446$

$B' = 3 - 2(0.446) = 2.1$

$q_a = 4.796/2.1 = 2.27$ F.S. = 6.6875/2.27 = 2.94 > 2.0 Okay

13' footing

LC #4 $\Sigma V = 3.746 + 0.375 + 4.875 = 8.996$

$\Sigma H = 0.857$

$e_o = .857(13)/8.996 = 1.238$

$B' = 3 - 2(1.238) = 0.524$

$q_a = 8.996/0.524 = 17.16$ F.S. = 33.3125/17.16 = 1.76 > 1.5 for this Okay

SUBJECT RTS Maintenance

COMPUTATION Arms Room

COMPUTED BY SG CHECKED BY DATE 8/9/89

(b) Section → 2'-6" footing

$\gamma_m = 125$ $N_q = N_\gamma = 17$ $\phi = 30°$ $c = 0$

Est. Wt. of Soil above base $= (2.5)(.125)(125.0) = 0.9375$ K

Wt. of Conc. in Excess of Soil $= \frac{[3.14 + (1.14)(1.5)](150-125)}{1000} = 0.1125$ K

$q_u = cN_c + \gamma_m D N_q + 0.5\gamma_m B N_\gamma$

$= 0 + 125(2.5) + 125(1.5)(17) + 0.5(125)(3)(17) = 6.6875$ ksf

LC #1 $\Sigma V = 6.311 + 0.9375 + 0.1125 = 7.061$

$\Sigma H = 0.5861$

$e_b = 0.5861(2.5)/7.061 = 0.207$

$B' = 3 - 2(.207) = 2.58$

$q_a = 7.06/2.58(1) = 2.73$ F.S. $= 6.6875/2.73 = 2.44 > 2.0$ okay

LC #2 $\Sigma V = 4.558 + 0.9375 + 0.1125 = 5.608$

$\Sigma H = 0.3677$

$e_b = 0.3677(2.5)/5.608 = 0.164$

$B' = 3 - 2(.164) = 2.67$

$q_a = 5.608/2.67 = 2.09$ F.S. $= 6.6875/2.09 = 3.18 > 2.0$ okay

LC #3 $\Sigma V = 4.322 + 0.9375 + 0.1125 = 5.372$

$\Sigma H = 0.1786$

$e_b = 0.1786(2.5)/5.372 = 0.083$

$B' = 3 - 2(.083) = 2.833$

$q_a = 5.372/2.833 = 1.89$ F.S. $= 6.6875/1.89 = 3.52 > 1.5$ (earthquake) okay

SUBJECT RTS Maintenance

COMPUTATION Arms Room

COMPUTED BY SG CHECKED BY DATE 8/9/89

LC #4

$\Sigma V = 4.77 + 0.9375 + 0.1125 = 5.82$

$\Sigma H = 0.198$

$e_o = 0.198(2.5)/5.82 = 0.085$

$B' = 3 - 2(0.85) = 2.83$

$q_a = 5.82/2.83 = 2.06$ F.S. $= 6.6875/2.06 = 3.24 > 1.5$ Earthquake okay

LC #5

$\Sigma V = 5.84 + 0.9375 + 0.1125 = 6.89$

$\Sigma H = 0.516$

$e_o = 0.516(2.5)/6.89 = 0.187$

$B' = 3 - 2(0.187) = 2.62$

$q_a = 6.89/2.62 = 2.62$ F.S. $= 6.687/2.62 = 2.54 > 2.0$ okay

LC #6

$\Sigma V = 5 + 0.1125 + 0.9375 = 6.05$

$\Sigma H = 0.4066$

$e_o = 0.4066(2.5)/6.05 = 0.168$

$B' = 3 - 2(0.168) = 2.66$

$q_a = 6.05/2.66 = 2.27$ F.S. $= 6.687/2.27 = 2.94 > 2.0$ okay

SUBJECT RTS Maintenance

COMPUTATION Arms Room

COMPUTED BY _____ CHECKED BY _____ DATE 8/9/89

Wall Section → 13' footing

$\gamma_m = 125$ $N_q = N_\gamma = 17$ $\phi = 30°$ $c = 0$

Eff. wt of soil above base = $36(13)(125)/1000 = 4.875$ K

Wt of Conc in Excess of Displaced Soil = $[36(1.1) + 1(1)(12)](150-125)/100 = 0.375$ K

$q_u = 0 + 125(13) + 125(17)(12) + 0.5(125)(17)(3) = 30.3125$ ksf

LC #1 $\Sigma V = 6.011 + 4.875 + 0.375 = 11.26$
$\Sigma H = 0.5861$

$e_b = 0.5861(13)/11.26 = 0.6766$

$B' = 3 - 2(0.6766) = 1.646$

$q_a = 26/1.646 = 6.83$ F.S. = $30.3125/6.83 = 4.43 > 2.0$ okay

LC #2 $\Sigma V = 4.558 + 4.875 + 0.375 = 9.808$
$\Sigma H = 0.3677$

$e_b = 0.3677(13)/9.808 = 0.487$

$B' = 3 - 2(.487) = 2.025$

$q_a = 9.808/2.025 = 4.84$ F.S. = $30.3125/4.84 = 6.25 > 2.0$ okay

LC #3 $\Sigma V = 4.322 + 4.875 + 0.375 = 9.572$
$\Sigma H = 0.1786$

$e_b = 0.1786(13)/9.572 = 0.242$

$B' = 3 - 2(.242) = 2.515$

$q_a = 9.572/2.515 = 3.8$ F.S. = $30.31/3.8 = 7.9 > 2.0$ okay

SUBJECT RTS Maintenance

COMPUTATION Arms Room

COMPUTED BY _____ CHECKED BY _____ DATE 8/9/89

LL #4 $\Sigma V = 4.77 + 0.375 + 4.875 = 10.02$

$\Sigma H = 0.198$

$e_b = 0.198(13)/10.02 = 0.256$

$B' = 3 - 2(.256) = 2.48$

$q_a = 10.02/2.48 = 4.0302$ F.S. $= 30.3125/4.03 = 7.76 > 2.0$ okay

LL #5 $\Sigma V = 5.84 + 0.375 + 4.875 = 11.09$

$\Sigma H = 0.516$

$e_b = 0.516(13)/11.09 = 0.605$

$B' = 3 - 2(.605) = 1.80$

$q_a = 11.09/1.8 = 6.2$ F.S. $= 30.3125/6.2 = 4.89 > 2.0$ okay

LL #6 $\Sigma V = 5 + 4.875 + .375 = 10.25$

$\Sigma H = 0.4066$

$e_b = .4066(13)/10.25 = 0.51568$

$B' = 3 - 2(.5158) = 1.968$

$q_a = 10.25/1.968 = 5.206$ F.S. $= 30.31/5.2 = 5.8 > 2.0$ okay

SUBJECT [illegible]

COMPUTATION [illegible] Reinforcement

COMPUTED BY SG CHECKED BY _____ DATE 8/9/89

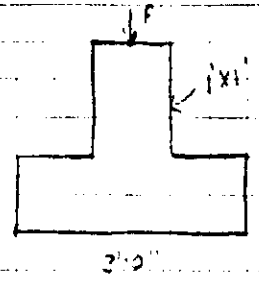


## Reinforcement Design

P = [illegible] = 12.03 k

$q = U/A_F = 12203/3(1) = 4067$ psf

## Shear Capacity

d = 12" - 2 - ½ = [illegible]

Shear @ d from support face

Factored $V_u$ = [illegible] $(\frac{3}{2} - [illegible])3$ = 2500.675 lb

$V_n$ = [illegible] = 2942 lb

Okay

$\phi 2\sqrt{f'_c}\,bd$ = 2(.85)[illegible](12)(36) = 37,484 lb

## Bending Moment

Moment from [illegible]

Factored $M_u$ = [illegible] $3(\frac{1}{2})^2$ = 600.5 lb-ft = 7208 lb-in

$M_n = \frac{7208}{.9}$ = [illegible]

$M_n = A_s f_y (d - a/2)$ = [illegible] = 8.55

$A_s$ = [illegible]/(60000)(0.85) = 0.156 in²

a = .156(60000)/(0.85(3000)(36)) = 0.102

8020 = [illegible](60000)(8.5 - .102/2)

$A_s$ = 0.141 in²

$\rho$ = 0.141/(9.5(36)) = 0.00404

$M_{in}$ = 0.00045(36)(9.5) = 0.156 in² USE #4 @ 12" ($A_s$ = 0.20)

USE #6 BARS AS STANDARD

SUBJECT RTS - Maintenance

COMPUTATION Footing Reinforcement

COMPUTED BY SAG CHECKED BY DATE 10-16-89

## Reinforcement

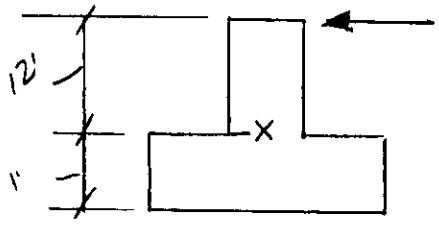


.857 K (LC #4)

$BM_{@X} = .857(12) = 10.284 \text{ FT-K}$

$$A_S = \frac{10284 \times 12}{24{,}000 \times .886 \times 7.625} = .60 \text{ IN}^2$$

USE #6 @ 9" O.C.

RTS FRAME TYPICAL

1 *** JOINT DATA ***

| JOINT | X (FT) | Y (FT) | FIXITY X | FIXITY Y | FIXITY R | KX (LB / IN) | KY (LB / IN) | KR (IN-LB / RAD) |
|---|---|---|---|---|---|---|---|---|
| 1 | .00 | .00 | * | * | | | | |
| 2 | .00 | 6.00 | | | | | | |
| 3 | .00 | 12.00 | | | | | | |
| 4 | 11.91 | 12.00 | | | | | | |
| 5 | 23.83 | 12.00 | | | | | | |
| 6 | 23.83 | 15.62 | | | | | | |
| 7 | 23.83 | 18.41 | | | | | | |
| 8 | 23.83 | 6.00 | | | | | | |
| 9 | 23.83 | .00 | * | * | | | | |

1 *** MEMBER DATA ***

| MEMBER | END A | END B | LENGTH FT | I FT**4 | A FT**2 | AS FT**2 | E KSI | G KSI |
|---|---|---|---|---|---|---|---|---|
| 1 | 1 | 2 | 6.00 | .1800E+02 | .6000E+01 | .6000E+01 | .3000E+04 | .1304E+04 |
| 2 | 2 | 3 | 6.00 | .1800E+02 | .6000E+01 | .6000E+01 | .3000E+04 | .1304E+04 |
| 3 | 3 | 4 | 11.91 | .5739E+00 | .9925E+01 | .9925E+01 | .3000E+04 | .1304E+04 |
| 4 | 4 | 5 | 11.91 | .5739E+00 | .9925E+01 | .9925E+01 | .3000E+04 | .1304E+04 |
| 5 | 5 | 6 | 3.62 | .1810E-02 | .2790E+00 | .2790E+00 | .3000E+04 | .1304E+04 |
| 6 | 6 | 7 | 2.79 | .1810E-02 | .2790E+00 | .2790E+00 | .3000E+04 | .1304E+04 |
| 7 | 5 | 8 | 6.00 | .1800E+02 | .6000E+01 | .6000E+01 | .3000E+04 | .1304E+04 |
| 8 | 8 | 9 | 6.00 | .1800E+02 | .6000E+01 | .6000E+01 | .3000E+04 | .1304E+04 |

1 *** LOAD CASE 1 DL+LL

| MEMBER | LA FT | PA LB / FT | LB FT | PB LB / FT | ANGLE DEG |
|---|---|---|---|---|---|
| 3 | .00 | .2000E+02 | 11.91 | .2000E+02 | .00 |
| 3 | .00 | .5500E+01 | 11.91 | .5500E+01 | .00 |
| 3 | .00 | .1250E+03 | 11.91 | .1250E+03 | .00 |
| 4 | .00 | .2000E+02 | 11.91 | .2000E+02 | .00 |
| 4 | .00 | .5500E+01 | 11.91 | .5500E+01 | .00 |
| 4 | .00 | .1250E+03 | 11.91 | .1250E+03 | .00 |

| JOINT | FORCE X LB | FORCE Y LB | MOMENT FT-LB |
|---|---|---|---|
| 2 | .0000E+00 | -.1800E+04 | .0000E+00 |
| 6 | .0000E+00 | -.8370E+03 | .0000E+00 |
| 7 | .0000E+00 | -.1581E+04 | .0000E+00 |
| 8 | .0000E+00 | -.1800E+04 | .0000E+00 |

1 *** LOAD CASE 2 DL + WL

| MEMBER | LA FT | PA LB / FT | LB FT | PB LB / FT | ANGLE DEG |
|---|---|---|---|---|---|
| 1 | .00 | -.1000E+02 | 6.00 | -.1000E+02 | .00 |
| 2 | .00 | -.1000E+02 | 6.00 | -.1000E+02 | .00 |
| 3 | .00 | .5500E+01 | 11.91 | .5500E+01 | .00 |
| 3 | .00 | .1250E+03 | 11.91 | .1250E+03 | .00 |
| 4 | .00 | .5500E+01 | 11.91 | .5500E+01 | .00 |
| 4 | .00 | .1250E+03 | 11.91 | .1250E+03 | .00 |
| 5 | .00 | -.1000E+02 | 2.79 | -.1000E+02 | .00 |
| 6 | .00 | -.1000E+02 | 2.79 | -.1000E+02 | .00 |
| 7 | .00 | .1000E+02 | 6.00 | .1000E+02 | .00 |
| 8 | .00 | .1000E+02 | 6.00 | .1000E+02 | .00 |

| JOINT | FORCE X LB | FORCE Y LB | MOMENT FT-LB |
|---|---|---|---|
| 2 | .0000E+00 | -.1800E+04 | .0000E+00 |
| 6 | .0000E+00 | -.8370E+03 | .0000E+00 |
| 7 | .0000E+00 | -.4620E+03 | .0000E+00 |
| 8 | .0000E+00 | -.1800E+04 | .0000E+00 |

1 *** LOAD CASE 3 DL + E

| MEMBER | LA FT | PA LB / FT | LB FT | PB LB / FT | ANGLE DEG |
|---|---|---|---|---|---|
| 3 | .00 | .1250E+03 | 11.91 | .1250E+03 | .00 |
| 3 | .00 | .5500E+01 | 11.91 | .5500E+01 | .00 |
| 4 | .00 | .1250E+03 | 11.91 | .1250E+03 | .00 |
| 4 | .00 | .5500E+01 | 11.91 | .5500E+01 | .00 |

| JOINT | FORCE X LB | FORCE Y LB | MOMENT FT-LB |
|---|---|---|---|
| 2 | .0000E+00 | -.1800E+04 | .0000E+00 |
| 5 | -.6590E+03 | .0000E+00 | .0000E+00 |
| 6 | .0000E+00 | -.8370E+03 | .0000E+00 |
| 7 | .0000E+00 | -.4620E+03 | .0000E+00 |
| 8 | .0000E+00 | -.1800E+04 | .0000E+00 |

SUBJECT
COMPUTATION
COMPUTED BY CHECKED BY DATE

1 *** LOAD CASE 4 DL + .25 SL + E

| MEMBER | LA FT | PA LB / FT | LB FT | PB LB / FT | ANGLE DEG |
|---|---|---|---|---|---|
| 3 | .00 | .1250E+03 | 11.91 | .1250E+03 | .00 |
| 3 | .00 | .5500E+01 | 11.91 | .5500E+01 | .00 |
| 3 | .00 | .5000E+01 | 11.91 | .5000E+01 | .00 |
| 4 | .00 | .1250E+03 | 11.91 | .1250E+03 | .00 |
| 4 | .00 | .5500E+01 | 11.91 | .5500E+01 | .00 |
| 4 | .00 | .5000E+01 | 11.91 | .5000E+01 | .00 |

| JOINT | FORCE X LB | FORCE Y LB | MOMENT FT-LB |
|---|---|---|---|
| 2 | .0000E+00 | -.1800E+04 | .0000E+00 |
| 5 | -.6590E+03 | .0000E+00 | .0000E+00 |
| 6 | .0000E+00 | -.8370E+03 | .0000E+00 |
| 7 | .0000E+00 | -.8510E+03 | .0000E+00 |
| 8 | .0000E+00 | -.1800E+04 | .0000E+00 |

1 *** LOAD CASE 5 DL + SL + .5W

| MEMBER | LA FT | PA LB / FT | LB FT | PB LB / FT | ANGLE DEG |
|---|---|---|---|---|---|
| 1 | .00 | -.5000E+01 | 6.00 | -.5000E+01 | .00 |
| 2 | .00 | -.5000E+01 | 6.00 | -.5000E+01 | .00 |
| 3 | .00 | .2000E+02 | 11.91 | .2000E+02 | .00 |
| 3 | .00 | .1250E+03 | 11.91 | .1250E+03 | .00 |
| 3 | .00 | .5500E+01 | 11.91 | .5500E+01 | .00 |
| 4 | .00 | .2000E+02 | 11.91 | .2000E+02 | .00 |
| 4 | .00 | .1250E+03 | 11.91 | .1250E+03 | .00 |
| 4 | .00 | .5500E+01 | 11.91 | .5500E+01 | .00 |
| 5 | .00 | -.5000E+01 | 2.79 | -.5000E+01 | .00 |
| 6 | .00 | -.5000E+01 | 2.79 | -.5000E+01 | .00 |
| 7 | .00 | .5000E+01 | 6.00 | .5000E+01 | .00 |
| 8 | .00 | .5000E+01 | 6.00 | .5000E+01 | .00 |

| JOINT | FORCE X LB | FORCE Y LB | MOMENT FT-LB |
|---|---|---|---|
| 2 | .0000E+00 | -.1800E+04 | .0000E+00 |
| 6 | .0000E+00 | -.8370E+03 | .0000E+00 |
| 7 | .0000E+00 | -.1457E+04 | .0000E+00 |
| 8 | .0000E+00 | -.1800E+04 | .0000E+00 |

1 *** LOAD CASE 6 DL + .5SL + WL

| MEMBER | LA FT | PA LB / FT | LB FT | PB LB / FT | ANGLE DEG |
|---|---|---|---|---|---|
| 1 | .00 | -.1000E+02 | 6.00 | -.1000E+02 | .00 |
| 2 | .00 | -.1000E+02 | 6.00 | -.1000E+02 | .00 |
| 3 | .00 | .1250E+03 | 11.91 | .1250E+03 | .00 |
| 3 | .00 | .5500E+01 | 11.91 | .5500E+01 | .00 |
| 3 | .00 | .1000E+02 | 11.91 | .1000E+02 | .00 |
| 4 | .00 | .1250E+03 | 11.91 | .1250E+03 | .00 |
| 4 | .00 | .5500E+01 | 11.91 | .5500E+01 | .00 |
| 4 | .00 | .1000E+02 | 11.91 | .1000E+02 | .00 |
| 5 | .00 | -.1000E+02 | 2.79 | -.1000E+02 | .00 |
| 6 | .00 | -.1000E+02 | 2.79 | -.1000E+02 | .00 |
| 7 | .00 | .1000E+02 | 6.00 | .1000E+02 | .00 |
| 8 | .00 | .1000E+02 | 6.00 | .1000E+02 | .00 |

| JOINT | FORCE X LB | FORCE Y LB | MOMENT FT-LB |
|---|---|---|---|
| 2 | .0000E+00 | -.1800E+04 | .0000E+00 |
| 6 | .0000E+00 | -.8370E+03 | .0000E+00 |
| 7 | .0000E+00 | -.7720E+03 | .0000E+00 |
| 8 | .0000E+00 | -.1800E+04 | .0000E+00 |

1 LOAD CASE 1

.0067°

$\frac{2}{360} = \frac{23.83(12)}{360} = .79''$

JOINT DISPLACEMENTS

| JOINT | DX IN | DY IN | DR RAD |
|---|---|---|---|
| 1 | .0000E+00 | .0000E+00 | .0000E+00 |
| 2 | -.5409E-04 | -.9981E-04 | .0000E+00 |
| 3 | .8719E-04 | -.1496E-03 | .0000E+00 |
| 4 | .6765E-04 | -.6708E-02 | .0000E+00 |
| 5 | .4810E-04 | -.2840E-03 | .0000E+00 |
| 6 | -.1171E-03 | -.1155E-02 | .0000E+00 |
| 7 | -.2445E-03 | -.1595E-02 | .0000E+00 |
| 8 | .1217E-03 | -.1670E-03 | .0000E+00 |
| 9 | .0000E+00 | .0000E+00 | .0000E+00 |

SUBJECT

COMPUTATION

COMPUTED BY CHECKED BY DATE

MEMBER END FORCES

| MEMBER | JOINT | AXIAL LB | SHEAR LB | MOMENT FT-LB | MOMENT EXTREMA FT-LB | LOCATION FT |
|---|---|---|---|---|---|---|
| 1 | 1 | -.3593E+04 | -.5861E+03 | .0000E+00 | .0000E+00 | .00 |
| | 2 | -.3593E+04 | .5861E+03 | -.3517E+04 | -.3517E+04 | 6.00 |
| 2 | 2 | -.1793E+04 | -.5861E+03 | -.3517E+04 | -.3517E+04 | .00 |
| | 3 | -.1793E+04 | .5861E+03 | -.7033E+04 | -.7033E+04 | 6.00 |
| 3 | 3 | -.5861E+03 | .1793E+04 | -.7033E+04 | .3650E+04 | 11.91 |
| | 4 | -.5861E+03 | .0000E+00 | .3650E+04 | -.7033E+04 | .00 |
| 4 | 4 | -.5861E+03 | .0000E+00 | .3650E+04 | .3650E+04 | .00 |
| | 5 | -.5861E+03 | .1793E+04 | -.7033E+04 | -.7033E+04 | 11.91 |
| 5 | 5 | -.2418E+04 | .0000E+00 | .0000E+00 | .0000E+00 | .00 |
| | 6 | -.2418E+04 | .0000E+00 | .0000E+00 | .0000E+00 | .00 |
| 6 | 6 | -.1581E+04 | .0000E+00 | .0000E+00 | .0000E+00 | .00 |
| | 7 | -.1581E+04 | .0000E+00 | .0000E+00 | .0000E+00 | .00 |
| 7 | 5 | -.4211E+04 | .5861E+03 | -.7033E+04 | -.3517E+04 | 6.00 |
| | 8 | -.4211E+04 | -.5861E+03 | -.3517E+04 | -.7033E+04 | .00 |
| 8 | 8 | -.6011E+04 | .5861E+03 | -.3517E+04 | .0000E+00 | 6.00 |
| | 9 | -.6011E+04 | -.5861E+03 | .0000E+00 | -.3517E+04 | .00 |

STRUCTURE REACTIONS

| JOINT | FORCE X LB | FORCE Y LB | MOMENT FT-LB |
|---|---|---|---|
| 1 | .5861E+03 | .3593E+04 | .0000E+00 |
| 9 | -.5861E+03 | .6011E+04 | .0000E+00 |
| TOTAL | .0000E+00 | .9604E+04 | |

LOAD CASE 2

JOINT DISPLACEMENTS

| JOINT | DX IN | DY IN | DR RAD |
|---|---|---|---|
| 1 | .0000E+00 | .0000E+00 | .2017E-04 |
| 2 | -.1457E-02 | -.9586E-04 | .1868E-04 |
| 3 | -.2700E-02 | -.1417E-03 | .1440E-04 |
| 4 | -.2719E-02 | -.5806E-02 ok | .0000E+00 |
| 5 | -.2737E-02 | -.2032E-03 | .2193E-04 |
| 6 | -.1603E-01 | -.6714E-03 | .4823E-03 |
| 7 | -.3335E-01 | -.7997E-03 | .5285E-03 |
| 8 | -.1303E-02 | -.1266E-03 | .1905E-04 |
| 9 | .0000E+00 | .0000E+00 | .1816E-04 |

SUBJECT

COMPUTATION

COMPUTED BY CHECKED BY DATE

MEMBER END FORCES

| MEMBER | JOINT | AXIAL LB | SHEAR LB | MOMENT FT-LB | MOMENT EXTREMA FT-LB | LOCATION FT |
|---|---|---|---|---|---|---|
| 1 | 1 | -.3451E+04 | -.6635E+03 | .0000E+00 | .0000E+00 | .00 |
| | 2 | -.3451E+04 | .6035E+03 | -.3801E+04 | -.3801E+04 | 6.00 |
| 2 | 2 | -.1651E+04 | -.6035E+03 | -.3801E+04 | -.3801E+04 | .00 |
| | 3 | -.1651E+04 | .5435E+03 | -.7241E+04 | -.7241E+04 | 6.00 |
| 3 | 3 | -.5435E+03 | .1651E+04 | -.7241E+04 | .3166E+04 | 11.91 |
| | 4 | -.5435E+03 | -.9603E+02 | .3166E+04 | -.7241E+04 | .00 |
| 4 | 4 | -.5435E+03 | .9603E+02 | .3166E+04 | .3201E+04 | .71 |
| | 5 | -.5435E+03 | .1459E+04 | -.4953E+04 | -.4953E+04 | 11.91 |
| 5 | 5 | -.1299E+04 | -.5580E+02 | .1788E+03 | .1788E+03 | .00 |
| | 6 | -.1299E+04 | .2790E+02 | .3892E+02 | .3892E+02 | 3.62 |
| 6 | 6 | -.4620E+03 | -.2790E+02 | .3892E+02 | .3892E+02 | .00 |
| | 7 | -.4620E+03 | .0000E+00 | .0000E+00 | .0000E+00 | 2.79 |
| 7 | 5 | -.2758E+04 | .4877E+03 | -.5132E+04 | -.2386E+04 | 6.00 |
| | 8 | -.2758E+04 | -.4277E+03 | -.2386E+04 | -.5132E+04 | .00 |
| 8 | 8 | -.4558E+04 | .4277E+03 | -.2386E+04 | .0000E+00 | 6.00 |
| | 9 | -.4558E+04 | -.3677E+03 | .0000E+00 | -.2386E+04 | .00 |

STRUCTURE REACTIONS

| JOINT | FORCE X LB | FORCE Y LB | MOMENT FT-LB |
|---|---|---|---|
| 1 | .6635E+03 | .3451E+04 | .0000E+00 |
| 9 | -.3677E+03 | .4558E+04 | .0000E+00 |
| TOTAL | .2958E+03 | .8009E+04 | |

LOAD CASE 3

JOINT DISPLACEMENTS

| JOINT | DX IN | DY IN | DR RAD |
|---|---|---|---|
| 1 | .0000E+00 | .0000E+00 | .6737E-04 |
| 2 | -.4858E-02 | -.1024E-03 | .6543E-04 |
| 3 | -.9436E-02 | -.1548E-03 | .5961E-04 |
| 4 | -.9464E-02 | -.5807E-02 ok | -.3162E-04 |
| 5 | -.9492E-02 | -.1901E-03 | .6718E-04 |
| 6 | -.1241E-01 | -.6583E-03 | .6718E-04 |
| 7 | -.1466E-01 | -.7866E-03 | .6718E-04 |
| 8 | -.4716E-02 | -.1201E-03 | .6594E-04 |
| 9 | .0000E+00 | .0000E+00 | .6552E-04 |

SUBJECT

COMPUTATION

COMPUTED BY CHECKED BY DATE

MEMBER END FORCES

| MEMBER | JOINT | AXIAL LB | SHEAR LB | MOMENT FT-LB | MOMENT EXTREMA FT-LB | LOCATION FT |
|---|---|---|---|---|---|---|
| 1 | 1 | -.3687E+04 | -.8376E+03 | .0000E+00 | .0000E+00 | .00 |
| | 2 | -.3687E+04 | .8376E+03 | -.5025E+04 | -.5025E+04 | 6.00 |
| 2 | 2 | -.1887E+04 | -.8376E+03 | -.5025E+04 | -.5025E+04 | .00 |
| | 3 | -.1887E+04 | .8376E+03 | -.1005E+05 | -.1005E+05 | 6.00 |
| 3 | 3 | -.8376E+03 | .1887E+04 | -.1005E+05 | .3166E+04 | 11.91 |
| | 4 | -.8376E+03 | -.3319E+03 | .3166E+04 | -.1005E+05 | .00 |
| 4 | 4 | -.8376E+03 | .3319E+03 | .3166E+04 | .3588E+04 | 2.62 |
| | 5 | -.8376E+03 | .1223E+04 | -.2143E+04 | -.2143E+04 | 11.91 |
| 5 | 5 | -.1299E+04 | .0000E+00 | .0000E+00 | .0000E+00 | .00 |
| | 6 | -.1299E+04 | .0000E+00 | .0000E+00 | .0000E+00 | .00 |
| 6 | 6 | -.4620E+03 | .0000E+00 | .0000E+00 | .0000E+00 | .00 |
| | 7 | -.4620E+03 | .0000E+00 | .0000E+00 | .0000E+00 | .00 |
| 7 | 5 | -.2522E+04 | .1786E+03 | -.2143E+04 | -.1071E+04 | 6.00 |
| | 8 | -.2522E+04 | -.1786E+03 | -.1071E+04 | -.2143E+04 | .00 |
| 8 | 8 | -.4322E+04 | .1786E+03 | -.1071E+04 | .0000E+00 | 6.00 |
| | 9 | -.4322E+04 | -.1786E+03 | .0000E+00 | -.1071E+04 | .00 |

STRUCTURE REACTIONS

| JOINT | FORCE X LB | FORCE Y LB | MOMENT FT-LB |
|---|---|---|---|
| 1 | .8376E+03 | .3687E+04 | .0000E+00 |
| 9 | -.1786E+03 | .4322E+04 | .0000E+00 |
| TOTAL | .6590E+03 | .8009E+04 | |

1 LOAD CASE 4

JOINT DISPLACEMENTS

| JOINT | DX IN | DY IN | DR RAD |
|---|---|---|---|
| 1 | .0000E+00 | .0000E+00 | .6733E-04 |
| 2 | -.4855E-02 | -.1041E-03 | .6535E-04 |
| 3 | -.9424E-02 | -.1581E-03 | .5940E-04 |
| 4 | -.9453E-02 | -.6036E-02 ok | -.3169E-04 |
| 5 | -.9482E-02 | -.2150E-03 | .6724E-04 |
| 6 | -.1240E-01 | -.8234E-03 | .6724E-04 |
| 7 | -.1465E-01 | -.1060E-02 | .6724E-04 |
| 8 | -.4708E-02 | -.1325E-03 | .6587E-04 |
| 9 | .0000E+00 | .0000E+00 | .6541E-04 |

SUBJECT

COMPUTATION

COMPUTED BY CHECKED BY DATE

MEMBER END FORCES

| MEMBER | JOINT | AXIAL LB | SHEAR LB | MOMENT FT-LB | MOMENT EXTREMA FT-LB | LOCATION FT |
|---|---|---|---|---|---|---|
| 1 | 1 | -.3746E+04 | -.8570E+03 | .0000E+00 | .0000E+00 | .00 |
| | 2 | -.3746E+04 | .8570E+03 | -.5142E+04 | -.5142E+04 | 6.00 |
| 2 | 2 | -.1946E+04 | -.8570E+03 | -.5142E+04 | -.5142E+04 | .00 |
| | 3 | -.1946E+04 | .8570E+03 | -.1028E+05 | -.1028E+05 | 6.00 |
| 3 | 3 | -.8570E+03 | .1946E+04 | -.1028E+05 | .3288E+04 | 11.91 |
| | 4 | -.8570E+03 | -.3319E+03 | .3288E+04 | -.1028E+05 | .00 |
| 4 | 4 | -.8570E+03 | .3319E+03 | .3288E+04 | .3694E+04 | 2.38 |
| | 5 | -.8570E+03 | .1283E+04 | -.2377E+04 | -.2377E+04 | 11.91 |
| 5 | 5 | -.1688E+04 | .0000E+00 | .0000E+00 | .0000E+00 | .00 |
| | 6 | -.1688E+04 | .0000E+00 | .0000E+00 | .0000E+00 | .00 |
| 6 | 6 | -.8510E+03 | .0000E+00 | .0000E+00 | .0000E+00 | .00 |
| | 7 | -.8510E+03 | .0000E+00 | .0000E+00 | .0000E+00 | .00 |
| 7 | 5 | -.2971E+04 | .1980E+03 | -.2377E+04 | -.1188E+04 | 6.00 |
| | 8 | -.2971E+04 | -.1980E+03 | -.1188E+04 | -.2377E+04 | .00 |
| 8 | 8 | -.4771E+04 | .1980E+03 | -.1188E+04 | .0000E+00 | 6.00 |
| | 9 | -.4771E+04 | -.1980E+03 | .0000E+00 | -.1188E+04 | .00 |

STRUCTURE REACTIONS

| JOINT | FORCE X LB | FORCE Y LB | MOMENT FT-LB |
|---|---|---|---|
| 1 | .8570E+03 | .3746E+04 | .0000E+00 |
| 9 | -.1980E+03 | .4771E+04 | .0000E+00 |
| TOTAL | .6590E+03 | .8517E+04 | |

1 LOAD CASE 5

JOINT DISPLACEMENTS

| JOINT | DX IN | DY IN | DR RAD |
|---|---|---|---|
| 1 | .0000E+00 | .0000E+00 | .1042E-04 |
| 2 | -.7552E-03 | -.1011E-03 | .0000E+00 |
| 3 | -.1293E-02 | -.1523E-03 | .0000E+00 |
| 4 | -.1313E-02 | -.6707E-02 | .0000E+00 |
| 5 | -.1333E-02 | -.2744E-03 | .1307E-04 |
| 6 | -.8071E-02 | -.1101E-02 | .2432E-03 |
| 7 | -.1680E-01 | -.1506E-02 | .2664E-03 |
| 8 | -.5788E-03 | -.1622E-03 | .0000E+00 |
| 9 | .0000E+00 | .0000E+00 | .0000E+00 |

SUBJECT

COMPUTATION

COMPUTED BY CHECKED BY DATE

MEMBER END FORCES

| MEMBER | JOINT | AXIAL LB | SHEAR LB | MOMENT FT-LB | MOMENT EXTREMA FT-LB | LOCATION FT |
|---|---|---|---|---|---|---|
| 1 | 1 | -.3641E+04 | -.6637E+03 | .0000E+00 | .0000E+00 | .00 |
| | 2 | -.3641E+04 | .6337E+03 | -.3892E+04 | -.3892E+04 | 6.00 |
| 2 | 2 | -.1841E+04 | -.6337E+03 | -.3892E+04 | -.3892E+04 | .00 |
| | 3 | -.1841E+04 | .6037E+03 | -.7605E+04 | -.7605E+04 | 6.00 |
| 3 | 3 | -.6037E+03 | .1841E+04 | -.7605E+04 | .3651E+04 | 11.91 |
| | 4 | -.6037E+03 | -.4802E+02 | .3651E+04 | -.7605E+04 | .00 |
| 4 | 4 | -.6037E+03 | .4802E+02 | .3651E+04 | .3658E+04 | .24 |
| | 5 | -.6037E+03 | .1745E+04 | -.6460E+04 | -.6460E+04 | 11.91 |
| 5 | 5 | -.2294E+04 | -.2790E+02 | .8942E+02 | .8942E+02 | .00 |
| | 6 | -.2294E+04 | .1395E+02 | .1946E+02 | .1946E+02 | 3.62 |
| 6 | 6 | -.1457E+04 | -.1395E+02 | .1946E+02 | .1946E+02 | .00 |
| | 7 | -.1457E+04 | .0000E+00 | .0000E+00 | .0000E+00 | 2.79 |
| 7 | 5 | -.4039E+04 | .5758E+03 | -.6550E+04 | -.3185E+04 | 6.00 |
| | 8 | -.4039E+04 | -.5458E+03 | -.3185E+04 | -.6550E+04 | .00 |
| 8 | 8 | -.5839E+04 | .5458E+03 | -.3185E+04 | .0000E+00 | 6.00 |
| | 9 | -.5839E+04 | -.5158E+03 | .0000E+00 | -.3185E+04 | .00 |

STRUCTURE REACTIONS

| JOINT | FORCE X LB | FORCE Y LB | MOMENT FT-LB |
|---|---|---|---|
| 1 | .6637E+03 | .3641E+04 | .0000E+00 |
| 9 | -.5158E+03 | .5839E+04 | .0000E+00 |
| TOTAL | .1479E+03 | .9480E+04 | |

LOAD CASE 6

JOINT DISPLACEMENTS

| JOINT | DX IN | DY IN | DR RAD |
|---|---|---|---|
| 1 | .0000E+00 | .0000E+00 | .2019E-04 |
| 2 | -.1458E-02 | -.9917E-04 | .1861E-04 |
| 3 | -.2691E-02 | -.1483E-03 | .1406E-04 |
| 4 | -.2710E-02 | -.6252E-02 ok | .0000E+00 |
| 5 | -.2729E-02 | -.2271E-03 | .2216E-04 |
| 6 | -.1603E-01 | -.8070E-03 | .4825E-03 |
| 7 | -.3336E-01 | -.1021E-02 | .5288E-03 |
| 8 | -.1293E-02 | -.1385E-03 | .1901E-04 |
| 9 | .0000E+00 | .0000E+00 | .1802E-04 |

SUBJECT

COMPUTATION

COMPUTED BY CHECKED BY DATE

MEMBER END FORCES

| MEMBER | JOINT | AXIAL LB | SHEAR LB | MOMENT FT-LB | MOMENT EXTREMA FT-LB | LOCATION FT |
|---|---|---|---|---|---|---|
| 1 | 1 | -.3570E+04 | -.7024E+03 | .0000E+00 | .0000E+00 | .00 |
| | 2 | -.3570E+04 | .6424E+03 | -.4034E+04 | -.4034E+04 | 6.00 |
| 2 | 2 | -.1770E+04 | -.6424E+03 | -.4034E+04 | -.4034E+04 | .00 |
| | 3 | -.1770E+04 | .5824E+03 | -.7709E+04 | -.7709E+04 | 6.00 |
| 3 | 3 | -.5824E+03 | .1770E+04 | -.7709E+04 | .3409E+04 | 11.91 |
| | 4 | -.5824E+03 | -.9603E+02 | .3409E+04 | -.7709E+04 | .00 |
| 4 | 4 | -.5824E+03 | .9603E+02 | .3409E+04 | .3441E+04 | .71 |
| | 5 | -.5824E+03 | .1578E+04 | -.5420E+04 | -.5420E+04 | 11.91 |
| 5 | 5 | -.1609E+04 | -.5580E+02 | .1788E+03 | .1788E+03 | .00 |
| | 6 | -.1609E+04 | .2790E+02 | .3892E+02 | .3892E+02 | 3.62 |
| 6 | 6 | -.7720E+03 | -.2790E+02 | .3892E+02 | .3892E+02 | .00 |
| | 7 | -.7720E+03 | .0000E+00 | .0000E+00 | .0000E+00 | 2.79 |
| 7 | 5 | -.3187E+04 | .5266E+03 | -.5599E+04 | -.2620E+04 | 6.00 |
| | 8 | -.3187E+04 | -.4666E+03 | -.2620E+04 | -.5599E+04 | .00 |
| 8 | 8 | -.4987E+04 | .4666E+03 | -.2620E+04 | .0000E+00 | 6.00 |
| | 9 | -.4987E+04 | -.4066E+03 | .0000E+00 | -.2620E+04 | .00 |

STRUCTURE REACTIONS

| JOINT | FORCE X LB | FORCE Y LB | MOMENT FT-LB |
|---|---|---|---|
| 1 | .7024E+03 | .3570E+04 | .0000E+00 |
| 9 | -.4066E+03 | .4987E+04 | .0000E+00 |
| TOTAL | .2958E+03 | .8557E+04 | |

PROGRAM CFRAME V02.05 24JUL84
*-*-*-*-*-*-*-*-*-*-*-*-*-*-*-*-*

RUN DATE = 89/08/08
RUN TIME = 8.00.49

RTS WALL

1 *** JOINT DATA ***

| JOINT | X | Y | FIXITY X | FIXITY Y | FIXITY R | KX | KY | KR |
|---|---|---|---|---|---|---|---|---|
| | --- FT --- | | | | | ---LB / IN--- | | IN-LB /RAD |
| 1 | .00 | .00 | * | * | * | | | |
| 2 | .00 | 9.20 | | | | | | |
| 3 | .00 | 18.41 | | | | | | |

1 *** MEMBER DATA ***

| MEMBER | END A | END B | LENGTH FT | I FT**4 | A FT**2 | AS FT**2 | E KSI | G KSI |
|---|---|---|---|---|---|---|---|---|
| 1 | 1 | 2 | 9.20 | .6500E+02 | .9205E+01 | .9205E+01 | .3000E+04 | .1304E+04 |
| 2 | 2 | 3 | 9.20 | .6500E+02 | .9205E+01 | .9205E+01 | .3000E+04 | .1304E+04 |

1 *** LOAD CASE. 1 DL+SL

| JOINT | FORCE X LB | FORCE Y LB | MOMENT FT-LB |
|---|---|---|---|
| 2 | .0000E+00 | -.2762E+04 | .0000E+00 |
| 3 | .0000E+00 | -.1581E+04 | .0000E+00 |

1 *** LOAD CASE 2 DL+WL

| MEMBER | LA FT | PA LB / FT | LB FT | PB LB / FT | ANGLE DEG |
|---|---|---|---|---|---|
| 1 | .00 | -.2000E+02 | 9.20 | -.2000E+02 | .00 |
| 2 | .00 | -.2000E+02 | 9.20 | -.2000E+02 | .00 |

| JOINT | FORCE X LB | FORCE Y LB | MOMENT FT-LB |
|---|---|---|---|
| 2 | .0000E+00 | -.2762E+04 | .0000E+00 |
| 3 | .0000E+00 | [illegible] | .0000E+00 |

1 LOAD CASE 1

JOINT DISPLACEMENTS

| JOINT | DX IN | DY IN | DR RAD |
|---|---|---|---|
| 1 | .0000E+00 | .0000E+00 | .0000E+00 |
| 2 | .0000E+00 | -.1206E-03 | .0000E+00 |
| 3 | .0000E+00 | -.1645E-03 | .0000E+00 |

MEMBER END FORCES

| MEMBER | JOINT | AXIAL LB | SHEAR LB | MOMENT FT-LB | MOMENT EXTREMA FT-LB | LOCATION FT |
|---|---|---|---|---|---|---|
| 1 | 1 | -.4343E+04 | .0000E+00 | .0000E+00 | .0000E+00 | .00 |
| | 2 | -.4343E+04 | .0000E+00 | .0000E+00 | .0000E+00 | .00 |
| 2 | 2 | -.1581E+04 | .0000E+00 | .0000E+00 | .0000E+00 | .00 |
| | 3 | -.1581E+04 | .0000E+00 | .0000E+00 | .0000E+00 | .00 |

STRUCTURE REACTIONS

| JOINT | FORCE X LB | FORCE Y LB | MOMENT FT-LB |
|---|---|---|---|
| 1 | .0000E+00 | .4343E+04 | .0000E+00 |
| TOTAL | .0000E+00 | .4343E+04 | |

1 LOAD CASE 2

JOINT DISPLACEMENTS

| JOINT | DX IN | DY IN | DR RAD |
|---|---|---|---|
| 1 | .0000E+00 | .0000E+00 | .0000E+00 |
| 2 | -.6111E-04 | -.8263E-04 | .0000E+00 |
| 3 | -.1463E-03 | -.8854E-04 | .0000E+00 |

MEMBER END FORCES

| MEMBER | JOINT | AXIAL LB | SHEAR LB | MOMENT FT-LB | MOMENT EXTREMA FT-LB | LOCATION FT |
|---|---|---|---|---|---|---|
| 1 | 1 | -.2975E+04 | -.3682E+03 | .3389E+04 | .3389E+04 | .00 |
| | 2 | -.2975E+04 | .1841E+03 | .8473E+03 | .8473E+03 | 9.20 |
| 2 | 2 | -.2130E+03 | -.1841E+03 | .8473E+03 | .8473E+03 | .00 |
| | 3 | -.2130E+03 | .0000E+00 | .0000E+00 | .0000E+00 | 9.20 |

| JOINT | FORCE X LB | FORCE Y LB | MOMENT FT-LB |
|---|---|---|---|
| 1 | .3682E+03 | .2975E+04 | -.3389E+04 |
| TOTAL | .3682E+03 | .2975E+04 | |

1

MEMBER END FORCES

| MEMBER | LOAD CASE | JOINT | AXIAL LB | SHEAR LB | MOMENT FT-LB | MOMENT EXTREMA FT-LB | LOCATION FT |
|---|---|---|---|---|---|---|---|
| 1 | 1 | 1 | -.4343E+04 | .0000E+00 | .0000E+00 | .0000E+00 | .00 |
| | | 2 | -.4343E+04 | .0000E+00 | .0000E+00 | .0000E+00 | .00 |
| | 2 | 1 | -.2975E+04 | -.3682E+03 | .3389E+04 | .3389E+04 | .00 |
| | | 2 | -.2975E+04 | .1841E+03 | .8473E+03 | .8473E+03 | 9.20 |
| 2 | 1 | 2 | -.1581E+04 | .0000E+00 | .0000E+00 | .0000E+00 | .00 |
| | | 3 | -.1581E+04 | .0000E+00 | .0000E+00 | .0000E+00 | .00 |
| | 2 | 2 | -.2130E+03 | -.1841E+03 | .8473E+03 | .8473E+03 | .00 |
| | | 3 | -.2130E+03 | .0000E+00 | .0000E+00 | .0000E+00 | 9.20 |

1 *-*-*-*-*-*-*-*-*-*-*-*-*-*-*-*
PROGRAM CFRAME V02.05 24JUL84
*-*-*-*-*-*-*-*-*-*-*-*-*-*-*-*

RUN DATE = 89/08/29
RUN TIME = 7.14.44

RMS WALL

1 *** JOINT DATA ***

| JOINT | X | Y | FIXITY X | FIXITY Y | FIXITY R | KX | KY | KR |
|---|---|---|---|---|---|---|---|---|
| | ---- FT ---- | | | | | ---LB / IN--- | | IN-LB /RAD |
| 1 | .00 | .00 | * | * | * | | | |
| 2 | .00 | 9.20 | | | | | | |
| 3 | .00 | 18.41 | | | | | | |

1 *** MEMBER DATA ***

| MEMBER | END A | END B | LENGTH FT | I FT**4 | A FT**2 | AS FT**2 | E KSI | G KSI |
|---|---|---|---|---|---|---|---|---|
| 1 | 1 | 2 | 9.20 | .6500E+02 | .9205E+01 | .9205E+01 | .3000E+04 | .1304E+0 |
| 2 | 2 | 3 | 9.20 | .6500E+02 | .9205E+01 | .9205E+01 | .3000E+04 | .1304E+0 |

1 *** LOAD CASE 1

| JOINT | FORCE X LB | FORCE Y LB | MOMENT FT-LB |
|---|---|---|---|
| 2 | .0000E+00 | -.2762E+04 | .0000E+00 |
| 3 | .0000E+00 | -.1581E+04 | .0000E+00 |

1 *** LOAD CASE 2 ( LOAD CASE 3 - DL + LL + WL )

| | | | | | |
|---|---|---|---|---|---|
| 1 | .00 | -.2000E+02 | 9.20 | -.2000E+02 | .00 |
| 2 | .00 | -.2000E+02 | 9.20 | -.2000E+02 | .00 |

| JOINT | FORCE X LB | FORCE Y LB | MOMENT FT-LB |
|---|---|---|---|
| 2 | .0000E+00 | -.2752E+04 | .0000E+00 |
| 3 | .0000E+00 | -.1332E+04 | .0000E+00 |

1 LOAD CASE 1

JOINT DISPLACEMENTS

| JOINT | DX IN | DY IN | DR RAD |
|---|---|---|---|
| 1 | .0000E+00 | .0000E+00 | .0000E+00 |
| 2 | .0000E+00 | -.1206E-03 | .0000E+00 |
| 3 | .0000E+00 | -.1645E-03 | .0000E+00 |

MEMBER END FORCES

| MEMBER | JOINT | AXIAL LB | SHEAR LB | MOMENT FT-LB | MOMENT EXTREMA FT-LB | LOCATION FT |
|---|---|---|---|---|---|---|
| 1 | 1 | -.4343E+04 | .0000E+00 | .0000E+00 | .0000E+00 | .00 |
| | 2 | -.4343E+04 | .0000E+00 | .0000E+00 | .0000E+00 | .00 |
| 2 | 2 | -.1581E+04 | .0000E+00 | .0000E+00 | .0000E+00 | .00 |
| | 3 | -.1581E+04 | .0000E+00 | .0000E+00 | .0000E+00 | .00 |

STRUCTURE REACTIONS

| JOINT | FORCE X LB | FORCE Y LB | MOMENT FT-LB |
|---|---|---|---|
| 1 | .0000E+00 | .4343E+04 | .0000E+00 |
| TOTAL | .0000E+00 | .4343E+04 | |

1 LOAD CASE 2 LOAD CASE 3 - DL+LL+WL)

JOINT DISPLACEMENTS

| JOINT | DX IN | DY IN | DR RAD |
|---|---|---|---|
| 1 | .0000E+00 | .0000E+00 | .0000E+00 |
| 2 | -.6111E-04 | -.1137E-03 | .0000E+00 |
| 3 | [illegible] | [illegible] | [illegible] |

MEMBER END FORCES

| MEMBER | JOINT | AXIAL LB | SHEAR LB | MOMENT FT-LB | MOMENT EXTREMA FT-LB | LOCATION FT |
|---|---|---|---|---|---|---|
| 1 | 1 | -.4094E+04 | -.3682E+03 | .3389E+04 | .3389E+04 | .00 |
| | 2 | -.4094E+04 | .1841E+03 | .8473E+03 | .8473E+03 | 9.20 |
| 2 | 2 | -.1332E+04 | -.1841E+03 | .8473E+03 | .8473E+03 | .00 |
| | 3 | -.1332E+04 | .0000E+00 | .0000E+00 | .0000E+00 | 9.20 |

STRUCTURE REACTIONS

| JOINT | FORCE X LB | FORCE Y LB | MOMENT FT-LB |
|---|---|---|---|
| 1 | .3682E+03 | .4094E+04 | -.3389E+04 |
| TOTAL | .3682E+03 | .4094E+04 | |

SUBJECT

COMPUTATION

COMPUTED BY CHECKED BY DATE

*-*-*-*-*-*-*-*-*-*-*-*-*-*-*-*-*

PROGRAM CFRAME V02.05 24JUL84

*-*-*-*-*-*-*-*-*-*-*-*-*-*-*-*-*

RUN DATE = 89/08/08
RUN TIME = 8.06.06

T/S WALL W/PIN

1 *** JOINT DATA ***

| JOINT | X (FT) | Y (FT) | FIXITY X | FIXITY Y | FIXITY R | KX (LB / IN) | KY (LB / IN) | KR (IN-LB /RAD) |
|---|---|---|---|---|---|---|---|---|
| 1 | .00 | .00 | * | * | | | | |
| 2 | .00 | 9.20 | | | | | | |
| 3 | .00 | 18.41 | * | | | | | |

1 *** MEMBER DATA ***

| MEMBER | END A | END B | LENGTH FT | I FT**4 | A FT**2 | AS FT**2 | E KSI | G KSI |
|---|---|---|---|---|---|---|---|---|
| 1 | 1 | 2 | 9.20 | .6500E+02 | .9205E+01 | .9205E+01 | .3000E+04 | .1304E+( |
| 2 | 2 | 3 | 9.20 | .6500E+02 | .9205E+01 | .9205E+01 | .3000E+04 | .1304E+( |

1 *** LOAD CASE 1 DL + WL + LL (LC-4)

| MEMBER | LA FT | PA LB / FT | LB FT | PB LB / FT | ANGLE DEG |
|---|---|---|---|---|---|
| 1 | .00 | .2000E+02 | 9.20 | .2000E+02 | .00 |
| 2 | .00 | .2000E+02 | 9.20 | .2000E+02 | .00 |

| JOINT | FORCE X LB | FORCE Y LB | MOMENT FT-LB |
|---|---|---|---|
| 2 | .0000E+00 | -.2762E+04 | .0000E+00 |
| 3 | .0000E+00 | -.1332E+04 | .0000E+00 |

LOAD CASE 1

JOINT DISPLACEMENTS

| JOINT | DX IN | DY IN | DR RAD |
|---|---|---|---|
| 1 | .0000E+00 | .0000E+00 | .0000E+00 |
| 2 | .1867E-04 | -.1137E-03 | .0000E+00 |
| 3 | .0000E+00 | -.1507E-03 | .0000E+00 |

MEMBER END FORCES

| MEMBER | JOINT | AXIAL LB | SHEAR LB | MOMENT FT-LB | MOMENT EXTREMA FT-LB | LOCATION FT |
|---|---|---|---|---|---|---|
| 1 | 1 | -.4094E+04 | .1841E-03 | .0000E+00 | .8473E+03 | 9.20 |
| | 2 | -.4094E+04 | .0000E+00 | .8473E+03 | .0000E+00 | .00 |
| 2 | 2 | -.1332E+04 | .0000E+00 | .8473E+03 | .8473E+03 | .00 |
| | 3 | -.1332E+04 | .1841E+03 | .0000E+00 | .0000E+00 | 9.20 |

STRUCTURE REACTIONS

| JOINT | FORCE X LB | FORCE Y LB | MOMENT FT-LB |
|---|---|---|---|
| 1 | -.1841E+03 | .4094E+04 | .0000E+00 |
| 3 | -.1841E+03 | -.1803E-04 | .0000E+00 |
| TOTAL | -.3682E+03 | .4093E+04 | |

MEMBER END FORCES

| MEMBER | LOAD CASE | JOINT | AXIAL LB | SHEAR LB | MOMENT FT-LB | MOMENT EXTREMA FT-LB | LOCATION FT |
|---|---|---|---|---|---|---|---|
| 1 | 1 | 1 | -.4094E+04 | .1841E+03 | .0000E+00 | .8473E+03 | 9.20 |
| | | 2 | -.4094E+04 | .0000E+00 | .8473E+03 | .0000E+00 | .00 |
| 2 | 1 | 2 | -.1332E+04 | .0000E+00 | .8473E+03 | .8473E+03 | .00 |
| | | 3 | -.1332E+04 | .1841E+03 | .0000E+00 | .0000E+00 | 9.20 |

SUBJECT RTS- Maintenance

COMPUTATION CMU DESIGN

COMPUTED BY SAG CHECKED BY DATE 8-4-89

# CMU DESIGN

- work bay wall
- Mechanical Room

SUBJECT RTS - Maintenance

COMPUTATION CMU DESIGN

COMPUTED BY SAG CHECKED BY DATE 8-4-89

## CMU DESIGN

**Seismic:**
(TM5-809-10)

$$F_p = Z I C_p W_p$$

$C_p = .3$ (Table 3-4)
$I = 1.5$
$Z = 3/8$

$$F_p = 3/8(1.5)(.3)W_p = .168 W_p$$

8" block w/cores @ 32" O.C. $W_{cmu} = 58$ lb/ft²
$F_p = .168(58) = 11.42$ psf

12" block w/cores @ 32" O.C. $W_{cmu} = 89$ lb/ft²
$F_p = .168(89) = 14.95$ psf

Since 11.42 psf & 14.95 psf > 10 psf
USE SEISMIC for Design.

**Workbay wall**

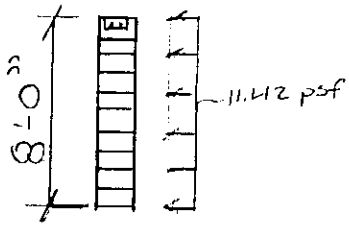


$$M_{base} = \frac{11.42(8.00)^2}{2} = 365.4 \text{ ft-lb}$$

$$P_{base} = 8.0(68) = 544\#$$

**height limitations**
Non-bearing Interior Partition, Reinforced $h/t < 48$

**Min Reinforcement** $\rho = .0015$ (Table 8-5, pg 8-1)
$1/3\rho = .0005$ ; $2/3\rho = .0010$

$\rho$ provided, Horiz = 1 - Bond beam, #9 DURAWALL (2 - #4 bars) @ 16" spacing

$$\rho_H = \frac{2(.2) + 6(.0345 \text{ IN})^2}{8(12)(8)} \quad .0008 > .0005 \text{ ok}$$

$\rho$ provided, Vert $\rho_V \geq .0005$

$$\therefore \text{Spacing } \frac{.31}{8(.0010)} = 38.75 \text{ IN}^2 > 32 \text{ IN}^2 \text{ ok}$$

SUBJECT RTS - Maintenance
COMPUTATION CMU DESIGN
COMPUTED BY SAG CHECKED BY DATE 8-4-89

Allowables increased by 1/3 by wind & E
$f'm = 1350$ psi, Allow $Fb = 1/3(1350) = 450$
$d = 3.81$ inches (7.62"/2)
Grade 60 Steel, $fy = 60{,}000$ psi, $fs = 24{,}000$ psi
Special Inspection Required

$M = 365.4$ # lbs/ft.

Mod. ratio, $n = E_s/E_m = \frac{E_s}{1000 f'm} = \frac{29{,}000{,}000}{1000 \times 1350} = 21.5$

$$2/jk = \frac{F_m b d^2}{M} = \frac{450(1.33) \times 12(3.81)^2}{365.4(12)} = 23.78$$

$$npj = \frac{nM}{bd^2 F_s} = \frac{21.5(365.4)(12)}{12(3.81)^2 \times 24{,}000 \times 1.33} = 0.01695$$

From np table

$2/jk = 23.78$ $np = .004$ *

$npj = .01695$ $np = .002$

$\rho = .004/21.5 = 0.000186$

$As = \rho bd = .000186(12)(3.81) = .0085$

#5 @ 32 " $As = .116 >> .0085$ ok

<u>Check stresses</u>

$$\rho_{ACT} = \frac{.31}{32(3.81)} = .0025$$

$np = .0025(21.5) = .054 \Rightarrow 2/jk = 7.902$
$j = .907$

$fa = 544/12(4.9) = 9.25$ psi

$$Fa = .20(1350)\left[1 - \left(\frac{8 \times 12}{40(4.9)}\right)^3\right] = 238.3 \text{ psi}$$

SUBJECT RTS - Maintenance
COMPUTATION CMU DESIGN
COMPUTED BY SAG CHECKED BY DATE 8-4-89

$F_b = 450$ psi

Masonry Stress

$$f_m = \frac{M}{bd^2}(2/jk) = \frac{365.4(12)}{12 \times (3.81)^2}(7.902)$$

$$= 198.9 \text{ psi} < 450 \text{ psi} \times 1.33 \quad \text{ok}$$

Steel Stress

$$f_s = \frac{M}{bd^2}\left(\frac{1}{pj}\right) = \frac{365.4(12)}{12(3.81)^2}\left(\frac{1}{.0025(.907)}\right)$$

$$= 11{,}101 < 24{,}000 \times 1.33 \quad \text{ok}$$

$$\frac{f_a}{F_a} + \frac{f_b}{F_b} \leq 1.33$$

$$\frac{9.25}{238.3} + \frac{198.9}{450} = .48 < 1.33 \quad \text{ok}$$

Check Foundation for Wall

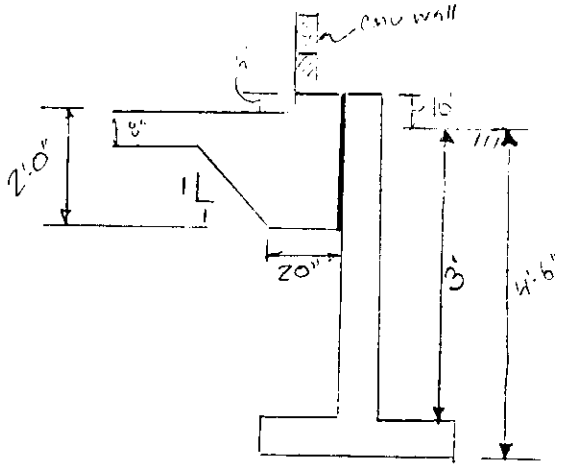


Pressure

$W_{wall} = 544$ lb/ft

$W_{Footing} = [(1.67)(2.0) + (.33)(.83) + 1/2(1.33)(1.33) + (.67)(1.33)]\ 150$
$= 808$ lb

$$\text{Pressure} = \frac{808 + 544}{1.67} = 809 \text{ psf} < 4000 \text{ ok}$$

SUBJECT CMU - Footing

COMPUTATION CMU DESIGN

COMPUTED BY SAG CHECKED BY DATE 8-4-89

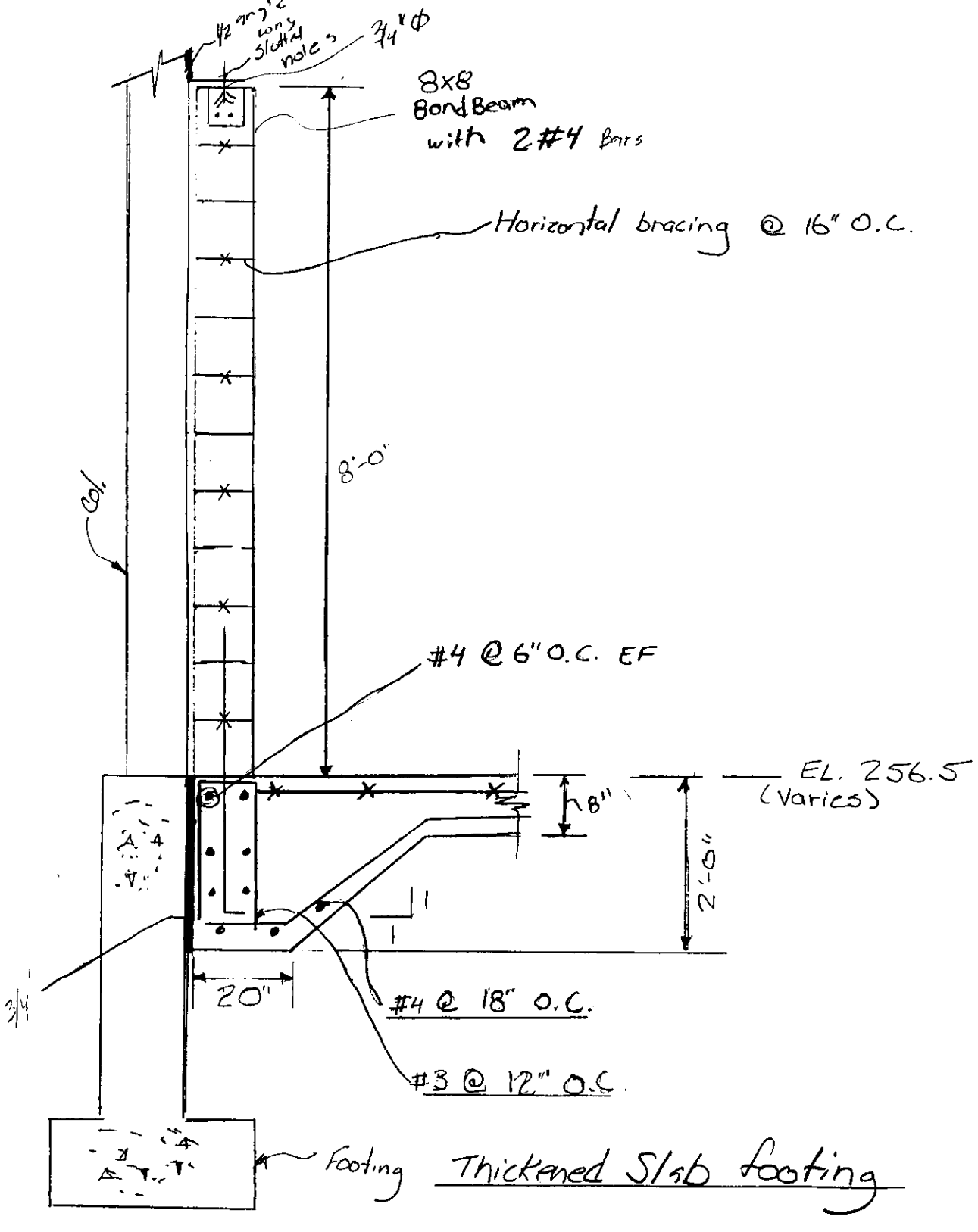


Thickened Slab footing

27 Sept 49

CORPS OF ENGINEERS, U.S. ARMY

PAGE

SUBJECT RTS- Maintenance

COMPUTATION Mech Room CMU WALLS

COMPUTED BY SAG CHECKED BY DATE 8-4-89

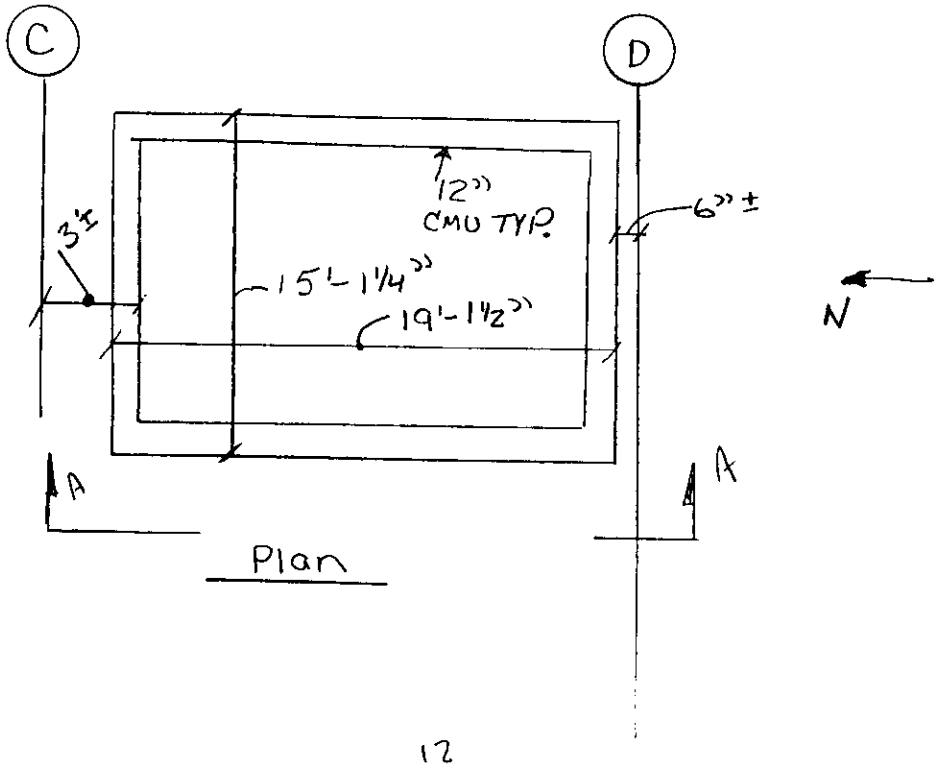


Plan

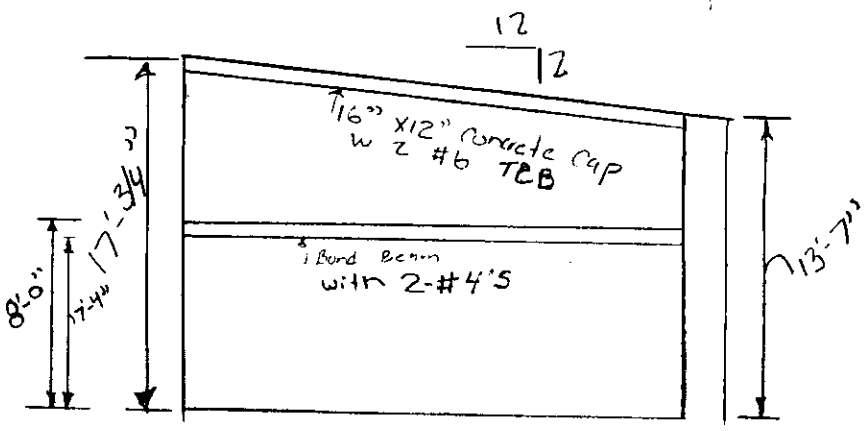


Section A-A

SUBJECT RTS - Maintenance

COMPUTATION Mech Room CMU Walls

COMPUTED BY SAG CHECKED BY DATE 8-4-89

Interior Wall at Mech. Room (12" block)

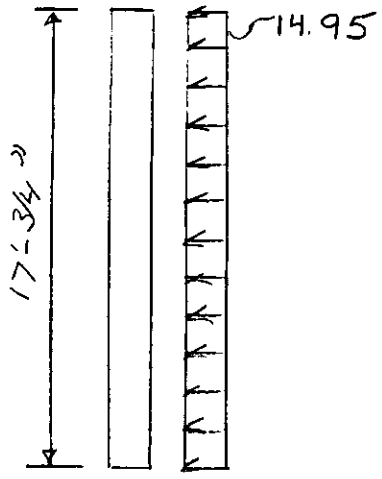


$$M_{base} = \frac{14.95(17.06)^2}{2} = 2175 \text{ \# FT/ft}$$

$$P_{base} = (17.06)89 = 1518 \text{ \#}$$

$f_m' = 1350$ psi , $F_b = 1/3(1350) = 450$

$d = 5.81$ IN

Grade 60 steel, $f_y = 60{,}000$, $f_s = 24{,}000$

Special Inspection Required

Mod Ratio, $n = E_s/E_m = \frac{29{,}000{,}000}{1000 \times 1350} = 21.5$

$$z/jk = \frac{F_m b d^2}{M} = \frac{450(1.33) \times 12(5.81)^2}{2175(12)} = 9.29$$

$$np_j = \frac{nM}{b d^2 F_s} = \frac{21.5(2175)(12)}{12(5.81)^2\, 24{,}000(1.33)} = 0.043$$

from np table

$z/jk = 9.29$ $np = .036$

$np_j = 0.043$ $np = .047$ *

$p = .047/21.5 = 0.0022$

$A_s = pbd = .0022(12)(5.81) = .153$ IN²/ft

USE # 6 @ 32" O.C. $A_s = .165$ IN/ft

SUBJECT RTS - Maintenance

COMPUTATION Mech Room CMU Walls

COMPUTED BY SAG CHECKED BY DATE 8-4-88

## Check Combined Interaction

$$\frac{f_a}{F_a} + \frac{f_b}{F_b} \leq 1.33 \qquad \rho_{act} = \frac{.44}{(32)(5.81)} = .00237$$

$n\rho = .051$

$2/jk = 8.075$

$j = .909$

$$f_a = \frac{P}{bt} = \frac{1518}{12(7.0)} = 18.07 \text{ psi}$$

$$F_a = 0.2 f'_m \left[1 - \left(\frac{h}{40t}\right)^3\right]$$

$$= 0.2(1350)\left[1 - \left(\frac{1706 \times 12}{40 \times 7}\right)^3\right] = 164.5 \text{ psi}$$

$F_b = 450$ psi

Masonry stress

$$f_m = \frac{M}{bd^2}(2/jk) = \frac{2175 \times 12}{12 \times (5.81)^2}(8.075)$$

$$f_m = 520 \text{ psi} < 450(1.33) = 598.5$$

Steel stress

$$f_s = \frac{M}{bd^2}\left(\frac{1}{\rho j}\right) = \frac{2175(12)}{(12)(5.81)^2}\left(\frac{1}{.00237(.909)}\right)$$

$$= 29,908 \text{ psi} < 24,000(1.33) = 31,920 \text{ psi}$$

$$\frac{18.07}{164.5} + \frac{520}{450} = 1.26 < 1.33 \quad \text{ok}$$

Lintel Design 6'-4" open span, $h_{door} = 7'-0"$

Lintels will be designed for their own weight plus the triangle of the masonry above. Sides slope at 45°

SUBJECT RTS - Maintenance
COMPUTATION Mech Room Walls
COMPUTED BY SAG CHECKED BY DATE 8-4-89

Moment: uniform load $= wL^2/8$
triangular load $= wL/6$

Deflection: Uniform load $\Delta = \frac{5wL^4}{384EI} = \frac{W}{K'}$

$$K' = \frac{384\, E_c I_{NA}}{(5 \times 12)^3 L^4} \qquad E_c = 2{,}000{,}000$$

$$K' = 88{,}889 \frac{I_{NA}}{L^4}$$

Triangular Load

$$\Delta = \frac{WL^3}{60EI} = \frac{W}{K'}$$

$$K' = \frac{60\, E_c I_{NA}}{L^3 (12)^3} \qquad E_c = 2{,}000{,}000$$

$$K' = 69444 \frac{I_{NA}}{L^3}$$

$$\Delta_{DL} = \frac{3W_{DL}}{K'} \leq L/50$$

$$\Delta_{LL} = \frac{W_{LL}}{K'} \qquad \Delta_{DL} + \Delta_{LL} = \frac{3W_{DL}}{K'} + \frac{W_{LL}}{K'} \leq L/30$$

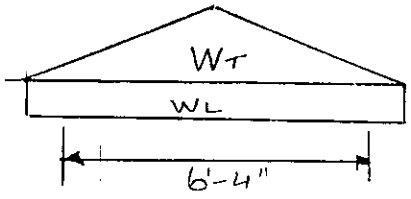


L = 7'-0"
(Not 6'-8" for block)

6'-4" Clear Opening

12 x 16 Lintel

$$W_L = 56 \times 2 \times 11.625/7.625 = 170\ \#/ft$$

$$W_T = \left(\frac{7}{2}\right)^2 \times 89 = 1090.2\ \#$$

$$\text{Moment} = \frac{170(7)^2}{8} + \frac{1090 \times 7.0}{6} = 4856.25$$

Table F10, TM5-809-3
For 12x16 W/2-#4 Mr = 7493
$I_{NA}$ = 600.844

Deflection

$$K'_U = 88{,}889 \left(\frac{600.844}{(7)^4}\right) = 22{,}244$$

SUBJECT RTS - Maintenance
COMPUTATION Mech Room CMU Walls
COMPUTED BY SAG CHECKED BY DATE 8-4-89

$$K_T = 69,444\left(\frac{600.84}{(7)^3}\right) = 121,646$$

$$\Delta_{DL} = \frac{3(170)}{22,244} + \frac{3(1090)}{121,646} = .05'' < L/50 = .14'' \text{ ok}$$

## Check Foundation for Wall

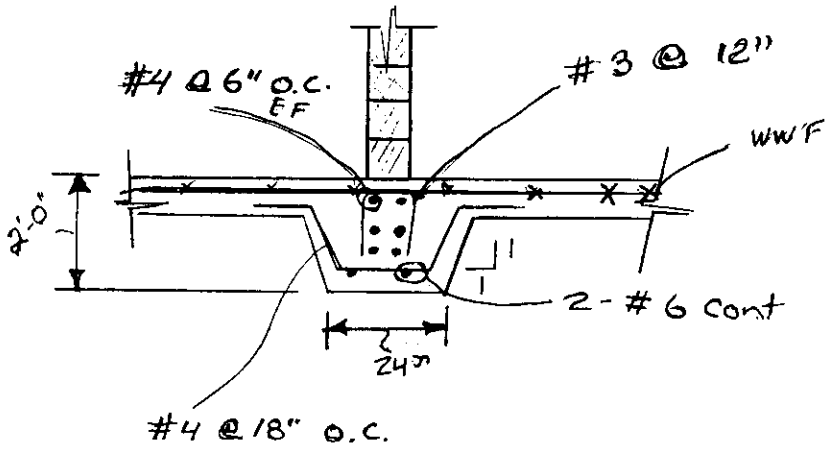


Pressure

$W_{wall} = 1518$ lb.

$W_{footing} = [(1.67)(2) + \frac{1}{2}(1.33)(1.33)2]\,150 = 766$ lb

$$\text{Pressure} = \frac{1518 + 766}{1.67} = 1368 \text{ lb/FT}^2 < 4000 \text{ ok}$$

Horizontal Reinforcement $\rho$ Min = .0015

$1/3\,\rho = .0005$

$$\rho = \frac{.44(2) + .2(2) + 13(.0345)}{10(12)(17)} = .0008 > .0005$$

SUBJECT RTS - MAINT

COMPUTATION

COMPUTED BY SAG CHECKED BY DATE 8-24-89

Calculation Checks

for 6" Stem increase

Critical Footings Checked by hand and Computer

SUBJECT RTS-Maint

COMPUTATION

COMPUTED BY SAG CHECKED BY DATE 8-24-89

P 30 - LL #6

Wt of Soil above base
$6(6)(4.5)(125/1000) = 20.25$ K

D + 0.5 W + A

Wt of Conc. in excess of displaced soil
$[(6)(6)(1.5) + (2)(2)(3.5)]\,150-125/1000 = 1.7$

$\Sigma V = 45.9 - 0.5(9.684) + 74.36 + 20.25 + 1.7 = 137.37$ K

$\Sigma H = 4.63 + 11.02 = 15.65$ K

$e_b = 15.65(5)/137.37 = 0.57$

$B' = 6 - 2(.57) = 4.86'$ $\alpha$ Arctan$(15.65/137.37) = 6.5°$

$q_a = 137.37K/(4.86)(6) = 4.71$ KSF

$q_u = [125(4.5)(17)(1 - 6.5/90)^2 + 0.4(125)(4.86)(17)(1 - 6.5/30)^2]/1000 = 10.77$

$FS = 10.77/4.71 = 2.29 > 2.0$ okay

P 37 - LL: D + 0.5W + A

$\Sigma V = 34.94 + 74.36 - 0.5(7.58) + 20.25 + 1.7 = 127.47$

$\Sigma H = 3.79 + 11.02 = 14.81$ K $e_b = 14.81(5)/127.47 = 0.58$

$\alpha$ = Arctan $14.81/127.47 = 6.63°$ $B' = 6 - 2(.58) = 4.84$

$q_a = 127.47/(4.84)(6) = 4.39$ KSF

$q_u = [125(4.5)(17)(1 - 6.63/90)^2 + 0.4(4.84)(125)(17)(1 - 6.63/30)^2]/1000 = 10.70$

$FS = 10.70/4.39 = 2.45 > 2.0$ okay

SUBJECT RTS Maint.

COMPUTATION Tank Work Bay Frame - Footing Stability Analysis

COMPUTED BY S/O CHECKED BY DATE 8/24/89

Page 33 Calcs. 6x6 footing 5' High

4. Dead + Snow + A

$\Sigma H = 11.02$

$\Sigma V = 143.72 + 20.25 + 1.7 = 165.67$ K

$e_o = 11.02(5)/165.67 = .333$ $B' = 6 - 2(.333) = 5.33'$

$\alpha = \text{Arctan}(11.02/165.67) = 3.81°$

$q_u = 165.67/5.33(6) = 5.18$ KSF

$q_u = (125)(4.5)(17)(1 - 3.81/90)^2 + 0.4(125)(5.33)(17)(1 - 3.81/30)^2/1000 = 12.22$

$FS = 12.22/5.18 = 2.36 > 2.0$ okay

6. Dead + 0.5 Wind + A

$\Sigma V = 116.92 + 20.25 + 1.7 = 138.87$

$\Sigma H = 15.9$

$e_o = 15.9(5)/138.87 = .57'$ $B' = 6 - 2(.57) = 4.86$

$\alpha = \text{Arctan}\ 15.9/138.87 = 6.53°$

$q_o = 138.87/4.86(6) = 4.76$ KSF

$q_u = 125(4.5)(17)(1 - 6.53/90)^2 + 0.4(125)(4.86)(17)(1 - 6.53/30)^2/1000 = 10.75$

$FS = 10.75/4.76 = 2.2672$ okay

SUBJECT RTS-Maint.

COMPUTATION

COMPUTED BY SAG CHECKED BY DATE 8-28-89

p40 · LC #3

D + W or E

Effective Wt of Soil above base = 9.0K

Wt of Concrete in excess.

$[(4)(4)(1.0) + (2)(2)(4)](150-125)/1000 = .8\ K$

$\Sigma V = 16.74 + 9.0 + 0.8 = 26.54$ $\Sigma H_b = 5.42\ K$ $\Sigma H_y = 2.2K$

$e_b = 5.42(5)/26.54 = 1.02'$ $B' = 4 - 2(1.02) = 1.96'$

$e_y = 2.2(5)/26.54 = .414'$ $H' = 4 - 2(.414) = 3.172'$

$\alpha = \text{Arctan}\left[(\sqrt{5.42^2 + 2.22^2})/26.54\right. = 12.44°$

$q_a = \dfrac{26.54}{(1.96)(3.2)} = 4.23\ KSF$

$q_u = [125(17)(4.5)(1 - 12.44/90)^2 + 0.4(125)(1.96)(17)(1 - 12.44/30)^2]/1000 = 7.67$

$FS = 7.67/4.23 = 1.81 \approx 2.0$ Say OK

p-42 LC - D + 0.5W + H

$\Sigma V = 116.92 + 20.25 + 1.7 = 138.87$

$H_b = 4.88 + 11.02 = 15.9$ $H_y = 0.5(5.49 + 0.1(51.3) = 7.87K$

$e_b = (5)15.9/138.87 = .547$ $e_y = 7.87(5)/138.87 = .283$

$B' = 6 - 2(.547) = 4.91$ $H' = 6 - 2(.283) = 5.43'$

$\Sigma H = \sqrt{15.9^2 + 7.87^2} = 17.74K$ $\alpha = \text{Arctan}\ 17.74/139 = 7.27°$

$q_a = 139/(4.91)(5.43) = 5.21\ KSF$

$q_u = [125(4.5)(17)(1 - 7.27°/90)^2 + 0.4(125)(4.91)(17)(1 - 7.27°/30)^2]/1000 = 10.5\ KSF$

$FS = 10.5/5.21 = 2.01 > 2.0$ OK

DBEAR/PC - BEARING CAPACITY ANALYSIS
FOUNDATION AND SOIL DESCRIPTIONS

* FOUNDATION GEOMETRY WIDTH = 6.00 LENGTH = 6.00

| LEFT SIDE: ELEV. (ft) | X-COORD. (ft) | RIGHT SIDE: ELEV. (ft) | X-COORD. (ft) |
|---|---|---|---|
| 0.00 | 0.00 | 0.00 | 6.00 |

FOUNDATION TYPE : FINITE PRESSURE TYPE : GROSS

* SOIL DATA

| LEFT SIDE: ELEV. (ft) | X-COORD. (ft) | RIGHT SIDE: ELEV. (ft) | X-COORD. (ft) |
|---|---|---|---|
| 4.50 | 0.00 | 4.50 | 6.00 |

| FRICTION ANGLE (deg) | COHESION (psf) | UNIT WEIGHT MOIST (pcf) | UNIT WEIGHT SATURATED (pcf) |
|---|---|---|---|
| 30.00 | 0.00 | 125.00 | 125.00 |

DBEAR/PC - BEARING CAPACITY ANALYSIS

* SURCHARGE DESCRIPTION

| LAYER NO. | SURFACE ELEVATION (ft) | UNIT WEIGHT MOIST (pcf) | UNIT WEIGHT SAT. (pcf) |
|---|---|---|---|
| 1 | ******* | *** | *** |
| 2 | ******* | *** | *** |

* SUBSOIL DESCRIPTION

| ELEVATION (feet) | FRICTION ANGLE | COHESION (psf) | UNIT WT. MOIST | UNIT WT. SAT. |
|---|---|---|---|---|
| ******* | *** | *** | *** | *** |

* WATER TABLE DESCRIPTION

WATER TABLE ELEVATION : ***** (ft)

UNIT WEIGHT OF WATER : ***** (pcf)

* APPLIED LOAD DESCRIPTION

| | | | |
|---|---|---|---|
| APPLIED LOAD | : | 137.4 | (kips) |
| X-COORD. of LOAD | : | 3.0 | (ft) |
| Z-COORD. of LOAD | : | 3.0 | (ft) |
| ANGLE of INCLINAT. | : | 6.5 | (deg.) |

CBEAR/PC - BEARING CAPACITY ANALYSIS
Using Meyerhof (1963)

* EFFECTIVE BASE DIMENSIONS : WIDTH = 6.00000 LENGTH = 5.00000

*** SUMMARY OF BEARING CAPACITY FACTORS ***

| FACTORS | C | Q | G | BEARING CAPACITY (kips/ft**2) | |
|---|---|---|---|---|---|
| BEARING CAP. | 30.1396 | 18.4011 | 15.6680 | 16.2261 | |
| SHAPE - CONC. | 1.60000 | 1.30000 | 1.30000 | 21.0939 | SELECTE |
| SHAPE ECC. | 1.00000 | 1.00000 | 1.00000 | 21.0939 | SELECTE |
| INCLINATION | 0.86077 | 0.86077 | 0.61361 | 16.2692 | SELECTE |
| BASE TILT | 1.00000 | 1.00000 | 1.00000 | 16.2692 | SELECTE |
| GROUND SLOPE | 1.00000 | 1.00000 | 1.00000 | 16.2692 | SELECTE |
| EMBEDMENT | 1.25980 | 1.12990 | 1.12990 | 16.3826 | SELECTE |

| | FNC + | FNQ + | FNG = | Q |
|---|---|---|---|---|
| COMBINE EFFECTS of FACTORS | 0.00000 | 13.0869 | 5.29570 | 18.3826 |

Q > qu = 10.77 ok

CBEAR/PC - BEARING CAPACITY ANALYSIS
FOUNDATION AND SOIL DESCRIPTIONS

* FOUNDATION GEOMETRY WIDTH = 6.00 LENGTH = 6.00

| LEFT SIDE: ELEV. (ft) | X-COORD. (ft) | RIGHT SIDE: ELEV. (ft) | X-COORD. (ft) |
|---|---|---|---|
| 0.00 | 0.00 | 0.00 | 6.00 |

FOUNDATION TYPE : FINITE PRESSURE TYPE : GROSS

* SOIL DATA

| LEFT SIDE: ELEV. (ft) | X-COORD. (ft) | RIGHT SIDE: ELEV. (ft) | X-COORD. (ft) |
|---|---|---|---|
| 5.00 | 0.00 | 5.00 | 6.00 |

| FRICTION ANGLE (deg) | COHESION (psf) | UNIT WEIGHT MOIST (pcf) | UNIT WEIGHT SATURATED (pcf) |
|---|---|---|---|
| 30.00 | 0.00 | 125.00 | 125.00 |

# DBEAR/PC - BEARING CAPACITY ANALYSIS

## * SURCHARGE DESCRIPTION

| LAYER NO. | SURFACE ELEVATION (ft) | UNIT WEIGHT MOIST (pcf) | UNIT WEIGHT SAT. (pcf) |
|---|---|---|---|
| 1 | ******* | *** | *** |
| 2 | ******* | *** | *** |

## * SUBSOIL DESCRIPTION

| ELEVATION (feet) | FRICTION ANGLE | COHESION (psf) | UNIT WT. MOIST | UNIT WT. SAT. |
|---|---|---|---|---|
| ******* | *** | *** | *** | *** |

## * WATER TABLE DESCRIPTION

WATER TABLE ELEVATION : ***** (ft)

UNIT WEIGHT OF WATER : ***** (pcf)

## * APPLIED LOAD DESCRIPTION

| | | | |
|---|---|---|---|
| APPLIED LOAD | : | 165.7 | (kips) |
| X-COORD. of LOAD | : | 3.0 | (ft) |
| Z-COORD. of LOAD | : | 3.0 | (ft) |
| ANGLE of INCLINAT. | : | 3.8 | (deg.) |

CBEAR/PC - BEARING CAPACITY ANALYSIS
Using Meyerhof (1963)

* EFFECTIVE BASE DIMENSIONS : WIDTH = 6.00000 LENGTH = 6.00000

*** SUMMARY OF BEARING CAPACITY FACTORS ***

| FACTORS | C | Q | G | BEARING CAPACITY (kips/ft**2) | |
|---|---|---|---|---|---|
| BEARING CAP. | 30.1396 | 19.4011 | 15.6680 | 17.3762 | |
| SHAPE - INC. | 1.60000 | 1.30000 | 1.30000 | 22.5890 | SELECTE |
| SHAPE ECC. | 1.00000 | 1.00000 | 1.00000 | 22.5890 | SELECTE |
| INCLINATION | 0.91712 | 0.91712 | 0.76212 | 19.5331 | SELECTE |
| BASE TILT | 1.00000 | 1.00000 | 1.00000 | 19.5331 | SELECTE |
| GROUND SLOPE | 1.00000 | 1.00000 | 1.00000 | 19.5331 | SELECTE |
| EMBEDMENT | 1.28567 | 1.14433 | 1.14433 | 22.3524 | SELECTE |

| | FNC | + | FNQ | + | FNG | = | Q |
|---|---|---|---|---|---|---|---|
| COMBINE EFFECTS of FACTORS | 0.00000 | | 15.6909 | | 6.66149 | | 22.3524 |

Q > qu = 12.22 ok

CBEAR/PC - BEARING CAPACITY ANALYSIS

* SURCHARGE DESCRIPTION

| LAYER NO. | SURFACE ELEVATION (ft) | UNIT WEIGHT MOIST (pcf) | UNIT WEIGHT SAT. (pcf) |
|---|---|---|---|
| 1 | ******* | *** | *** |
| 2 | ******* | *** | *** |

* SUBSOIL DESCRIPTION

| ELEVATION (feet) | FRICTION ANGLE | COHESION (psf) | UNIT WT. MOIST | UNIT WT. SAT. |
|---|---|---|---|---|
| ******* | *** | *** | *** | *** |

* WATER TABLE DESCRIPTION

WATER TABLE ELEVATION : ***** (ft)

UNIT WEIGHT OF WATER : ***** (pcf)

* APPLIED LOAD DESCRIPTION

| | | | |
|---|---|---|---|
| APPLIED LOAD | : | 139.9 | (kips) |
| X-COORD. of LOAD | : | 3.0 | (ft) |
| Z-COORD. of LOAD | : | 3.0 | (ft) |
| ANGLE of INCLINAT. | : | 6.5 | (deg.) |

Pg 33 calcs

L.C. D+.5W+A

CBEAR/PC - BEARING CAPACITY ANALYSIS
Using Meyerhof (1963)

* EFFECTIVE BASE DIMENSIONS : WIDTH = 6.00000 LENGTH = 6.00000

*** SUMMARY OF BEARING CAPACITY FACTORS ***

| FACTORS | C | Q | G | BEARING CAPACITY (kips/ft**2) | |
|---|---|---|---|---|---|
| BEARING CAP. | 30.1396 | 18.4011 | 15.6650 | 17.5762 | |
| SHAPE - CONC. | 1.60000 | 1.30000 | 1.30000 | 22.5890 | SELECTE |
| SHAPE ECC. | 1.00000 | 1.00000 | 1.00000 | 22.5890 | SELECTE |
| INCLINATION | 0.86015 | 0.86015 | 0.61204 | 17.5349 | SELECTE |
| BASE TILT | 1.00000 | 1.00000 | 1.00000 | 17.5349 | SELECTE |
| GROUND SLOPE | 1.00000 | 1.00000 | 1.00000 | 17.5349 | SELECTE |
| EMBEDMENT | 1.28967 | 1.14433 | 1.14433 | 20.0659 | SELECTE |
| | FNC + | FNQ + | FNG = | Q | |
| COMBINE EFFECTS of FACTORS | 0.00000 | 14.7162 | 5.34967 | 20.0659 | |

Pg 33 calcs

Q > qu = 10.75 ok

# CBEAR/PC - BEARING CAPACITY ANALYSIS

## * SURCHARGE DESCRIPTION

| LAYER NO. | SURFACE ELEVATION (ft) | UNIT WEIGHT MOIST (pcf) | UNIT WEIGHT SAT. (pcf) |
|---|---|---|---|
| 1 | ******* | *** | *** |
| 2 | ******* | *** | *** |

## * SUBSOIL DESCRIPTION

| ELEVATION (feet) | FRICTION ANGLE | COHESION (psf) | UNIT WT. MOIST | UNIT WT. SAT. |
|---|---|---|---|---|
| ******* | *** | *** | *** | *** |

## * WATER TABLE DESCRIPTION

WATER TABLE ELEVATION : ***** (ft)

UNIT WEIGHT OF WATER : ***** (pcf)

## * APPLIED LOAD DESCRIPTION

| | | | |
|---|---|---|---|
| APPLIED LOAD | : | 107.5 | (kips) |
| X-COORD. of LOAD | : | 3.0 | (ft) |
| Z-COORD. of LOAD | : | 3.0 | (ft) |
| ANGLE of INCLINAT. | : | 0.0 | (deg.) |

CBEAR/PC - BEARING CAPACITY ANALYSIS
Using Meyerhof (1963)

* EFFECTIVE BASE DIMENSIONS : WIDTH = 6.00000 LENGTH = 6.00000

*** SUMMARY OF BEARING CAPACITY FACTORS ***

| FACTORS | C | Q | G | BEARING CAPACITY (kips/ft**2) | |
|---|---|---|---|---|---|
| BEARING CAP. | 30.1396 | 18.4011 | 15.6680 | 16.2261 | |
| SHAPE - CONC. | 1.60000 | 1.30000 | 1.30000 | 21.0939 | SELECTE |
| SHAPE ECC. | 1.00000 | 1.00000 | 1.00000 | 21.0939 | SELECTE |
| INCLINATION | 0.85809 | 0.85809 | 0.60664 | 16.1815 | SELECTE |
| BASE TILT | 1.00000 | 1.00000 | 1.00000 | 16.1815 | SELECTE |
| GROUND SLOPE | 1.00000 | 1.00000 | 1.00000 | 16.1815 | SELECTE |
| EMBEDMENT | 1.25980 | 1.12990 | 1.12990 | 18.2835 | SELECTE |

| | FNC | + | FNQ | + | FNG | = | Q |
|---|---|---|---|---|---|---|---|
| COMBINE EFFECTS of FACTORS | 0.00000 | | 13.0462 | | 5.23727 | | 18.2835 |

$Q > q_u = 10.7$ OK

CBEAR/PC - BEARING CAPACITY ANALYSIS

* SURCHARGE DESCRIPTION

| LAYER NO. | SURFACE ELEVATION (ft) | UNIT WEIGHT MOIST (pcf) | UNIT WEIGHT SAT. (pcf) |
|---|---|---|---|
| 1 | ******* | *** | *** |
| 2 | ******* | *** | *** |

* SUBSOIL DESCRIPTION

| ELEVATION (feet) | FRICTION ANGLE | COHESION (psf) | UNIT WT. MOIST | UNIT WT. SAT. |
|---|---|---|---|---|
| ******* | *** | *** | *** | *** |

* WATER TABLE DESCRIPTION

WATER TABLE ELEVATION : ***** (ft)

UNIT WEIGHT OF WATER : ***** (pcf)

* APPLIED LOAD DESCRIPTION

| | | | |
|---|---|---|---|
| APPLIED LOAD | : | 26.5 | (kips) |
| X-COORD. of LOAD | : | 2.0 | (ft) |
| Z-COORD. of LOAD | : | 2.0 | (ft) |
| ANGLE of INCLINAT. | : | 12.4 | (deg.) |

CBEAR/PC - BEARING CAPACITY ANALYSIS
Using Meyerhof (1963)

* EFFECTIVE BASE DIMENSIONS : WIDTH = 4.00000 LENGTH = 4.00000

*** SUMMARY OF BEARING CAPACITY FACTORS ***

| FACTORS | C | Q | G | BEARING CAPACITY (kips/ft**2) | |
|---|---|---|---|---|---|
| BEARING CAP. | 30.1396 | 18.4011 | 15.6680 | 14.2676 | |
| SHAPE - CONC. | 1.60000 | 1.30000 | 1.30000 | 18.5479 | SELECTE |
| SHAPE ECC. | 1.00000 | 1.00000 | 1.00000 | 18.5479 | SELECTE |
| INCLINATION | 0.74266 | 0.74266 | 0.34261 | 11.7377 | SELECTE |
| BASE TILT | 1.00000 | 1.00000 | 1.00000 | 11.7377 | SELECTE |
| GROUND SLOPE | 1.00000 | 1.00000 | 1.00000 | 11.7377 | SELECTE |
| EMBEDMENT | 1.38971 | 1.19485 | 1.19485 | 14.0249 | SELECTE |

| | FNC | + | FNQ | + | FNG | = | Q |
|---|---|---|---|---|---|---|---|
| COMBINE EFFECTS of FACTORS | 0.00000 | | 11.9403 | | 2.08458 | | 14.0249 |

$Q > q_u = 7.67$ ok

LL - U+.5W+A φ 42.



CBEAR/PC - BEARING CAPACITY ANALYSIS

* SURCHARGE DESCRIPTION

| LAYER NO. | SURFACE ELEVATION (ft) | UNIT WEIGHT MOIST (pcf) | UNIT WEIGHT SAT. (pcf) |
|---|---|---|---|
| 1 | ******* | *** | *** |
| 2 | ******* | *** | *** |

* SUBSOIL DESCRIPTION

| ELEVATION (feet) | FRICTION ANGLE | COHESION (psf) | UNIT WT. MOIST | UNIT WT. SAT. |
|---|---|---|---|---|
| ******* | *** | *** | *** | *** |

* WATER TABLE DESCRIPTION

WATER TABLE ELEVATION : ***** (ft)

UNIT WEIGHT OF WATER : ***** (pcf)

* APPLIED LOAD DESCRIPTION

| | | | |
|---|---|---|---|
| APPLIED LOAD | : | 138.9 | (kips) |
| X-COORD. of LOAD | : | 3.0 | (ft) |
| Z-COORD. of LOAD | : | 3.0 | (ft) |
| ANGLE of INCLINAT. | : | 7.3 | (deg.) |

CBEAR/PC - BEARING CAPACITY ANALYSIS
Using Meyernof (1963)

* EFFECTIVE BASE DIMENSIONS : WIDTH = 6.00000 LENGTH = 6.00000

*** SUMMARY OF BEARING CAPACITY FACTORS ***

| FACTORS | C | Q | G | BEARING CAPACITY (kips/ft**2) | |
|---|---|---|---|---|---|
| BEARING CAP. | 30.1396 | 13.4011 | 15.6680 | 16.2261 | |
| SHAPE - CONC. | 1.60000 | 1.30000 | 1.30000 | 21.0939 | SELECTE |
| SHAPE ECC. | 1.00000 | 1.00000 | 1.00000 | 21.0939 | SELECTE |
| INCLINATION | 0.84496 | 0.84496 | 0.57405 | 15.7545 | SELECTE |
| BASE TILT | 1.00000 | 1.00000 | 1.00000 | 15.7545 | SELECTE |
| GROUND SLOPE | 1.00000 | 1.00000 | 1.00000 | 15.7545 | SELECTE |
| EMBEDMENT | 1.25980 | 1.12990 | 1.12990 | 17.8010 | SELECTE |

| | FNC | + | FNQ | + | FNG | = | Q |
|---|---|---|---|---|---|---|---|
| COMBINE EFFECTS of FACTORS | 0.00000 | | 12.3467 | | 4.95435 | | 17.8010 |

Q > qu = 10.5 ok

Pages 65 - 69

Computer Checks of Hand Calculations

NED FORM 225
27 Sept 49

CORPS OF ENGINEERS, U.S. ARMY

PAGE

SUBJECT RTS-Maintenance - NAD Comment 3b.

COMPUTATION Computer check of pages 65 to 69 using C-Bear

COMPUTED BY SAG CHECKED BY DATE

Pg. 65 LOAD CASE: DEAD + SNOW

U.S. Army Engineer Waterways Experiment Station

CBEAR/PC - BEARING CAPACITY ANALYSIS
FOUNDATION AND SOIL DESCRIPTIONS

* FOUNDATION GEOMETRY WIDTH = 4.00 LENGTH = 4.00

| LEFT SIDE: ELEV. (ft) | X-COORD. (ft) | RIGHT SIDE: ELEV. (ft) | X-COORD. (ft) |
|---|---|---|---|
| 0.00 | 0.00 | 0.00 | 4.00 |

FOUNDATION TYPE : FINITE PRESSURE TYPE : GROSS

* SOIL DATA

| LEFT SIDE: ELEV. (ft) | X-COORD. (ft) | RIGHT SIDE: ELEV. (ft) | X-COORD. (ft) |
|---|---|---|---|
| 4.50 | 0.00 | 4.50 | 4.00 |

| FRICTION ANGLE (deg) | COHESION (psf) | UNIT WEIGHT MOIST (pcf) | UNIT WEIGHT SATURATED (pcf) |
|---|---|---|---|
| 30.0 | 0.00 | 125.0 | 125.0 |

N

U.S. Army Engineer Waterways Experiment Station

CBEAR/PC - BEARING CAPACITY ANALYSIS

* SURCHARGE DESCRIPTION
( option not selected )

| LAYER NO. | SURFACE ELEVATION (ft) | UNIT WEIGHT MOIST (pcf) | UNIT WEIGHT SAT. (pcf) |
|---|---|---|---|
| 1 | ******* | *** | *** |
| 2 | ******* | *** | *** |

* SUBSOIL DESCRIPTION
( option not selected )

| ELEVATION (feet) | FRICTION ANGLE | COHESION (psf) | UNIT WT. MOIST | UNIT WT. SAT. |
|---|---|---|---|---|
| ******* | *** | **** | *** | *** |

SUBJECT

COMPUTATION

COMPUTED BY CHECKED BY DATE

* WATER TABLE DESCRIPTION
( option not selected )
WATER TABLE ELEVATION : ***** (ft)

UNIT WEIGHT OF WATER : ***** (pcf)

* APPLIED LOAD DESCRIPTION

| | | |
|---|---|---|
| APPLIED LOAD | : 47.4 | (kips) |
| X-COORD. of LOAD | : 2.00 | (ft) |
| Z-COORD. of LOAD | : 2.00 | (ft) |
| ANGLE of INCLINAT. | : 0.0 | (deg.) |

N

U.S. Army Engineer Waterways Experiment Station

CBEAR/PC - BEARING CAPACITY ANALYSIS

* EFFECTIVE BASE DIMENSIONS : WIDTH = 4.00 LENGTH = 4.00

*** SUMMARY OF BEARING CAPACITY FACTORS ***

| FACTORS | C | Q | G | BEARING CAPACITY (kips/ft**2) |
|---|---|---|---|---|
| BEARING CAP. | 30.14 | 15.40 | 15.67 | 14.268 |
| SHAPE - CONC. | 1.60000 | 1.30000 | 1.30000 | 18.548 |
| SHAPE ECC. | 1.00000 | 1.00000 | 1.00000 | 18.548 |
| INCLINATION | 1.00000 | 1.00000 | 1.00000 | 18.548 |
| BASE TILT | 1.00000 | 1.00000 | 1.00000 | 18.548 |
| GROUND SLOPE | 1.00000 | 1.00000 | 1.00000 | 18.548 |
| EMBEDMENT | 1.38971 | 1.19486 | 1.19486 | 22.162 |

| | FNC | + | FNQ | + | FNG | = | Q |
|---|---|---|---|---|---|---|---|
| COMBINE EFFECTS of FACTORS | 0.000 | | 16.078 | | 6.084 | | 22.162 |

Since Q = 21.162 > qu 12.96 ok

Pg. 66 LOAD CASE 8 DEAD & WIND

U.S. Army Engineer Waterways Experiment Station

CBEAR/PC - BEARING CAPACITY ANALYSIS
FOUNDATION AND SOIL DESCRIPTIONS

* FOUNDATION GEOMETRY WIDTH = 4.00 LENGTH = 4.00

| LEFT SIDE: ELEV. (ft) | X-COORD. (ft) | RIGHT SIDE: ELEV. (ft) | X-COORD. (ft) |
|---|---|---|---|
| 0.00 | 0.00 | 0.00 | 4.00 |

FOUNDATION TYPE : FINITE PRESSURE TYPE : GROSS

* SOIL DATA

| LEFT SIDE: ELEV. (ft) | X-COORD. (ft) | RIGHT SIDE: ELEV. (ft) | X-COORD. (ft) |
|---|---|---|---|
| 4.50 | 0.00 | 4.50 | 4.00 |

| FRICTION ANGLE (deg) | COHESION (psf) | UNIT WEIGHT MOIST (pcf) | UNIT WEIGHT SATURATED (pcf) |
|---|---|---|---|
| 30.0 | 0.00 | 125.0 | 125.0 |

N

U.S. Army Engineer Waterways Experiment Station

CBEAR/PC - BEARING CAPACITY ANALYSIS

* SURCHARGE DESCRIPTION
( option not selected )

| LAYER NO. | SURFACE ELEVATION (ft) | UNIT WEIGHT MOIST (pcf) | UNIT WEIGHT SAT. (pcf) |
|---|---|---|---|
| 1 | ******* | *** | *** |
| 2 | ******* | *** | *** |

* SUBSOIL DESCRIPTION
( option not selected )

| ELEVATION (feet) | FRICTION ANGLE | COHESION (psf) | UNIT WT. MOIST | UNIT WT. SAT. |
|---|---|---|---|---|
| ******* | *** | **** | *** | *** |

SUBJECT

COMPUTATION

COMPUTED BY CHECKED BY DATE

* WATER TABLE DESCRIPTION
( option not selected )
WATER TABLE ELEVATION : ***** (ft)

UNIT WEIGHT OF WATER : ***** (pcf)

* APPLIED LOAD DESCRIPTION

| | | |
|---|---|---|
| APPLIED LOAD | : 28.7 | (kips) |
| X-COORD. of LOAD | : 2.00 | (ft) |
| Z-COORD. of LOAD | : 2.00 | (ft) |
| ANGLE of INCLINAT. | : 4.6 | (deg.) |

N

U.S. Army Engineer Waterways Experiment Station

CBEAR/PC - BEARING CAPACITY ANALYSIS

* EFFECTIVE BASE DIMENSIONS : WIDTH = 4.00 LENGTH = 4.00

*** SUMMARY OF BEARING CAPACITY FACTORS ***

| FACTORS | C | Q | G | BEARING CAPACITY (kips/ft**2) |
|---|---|---|---|---|
| BEARING CAP. | 30.14 | 18.40 | 15.67 | 14.268 |
| SHAPE - CONC. | 1.60000 | 1.30000 | 1.30000 | 18.548 |
| SHAPE ECC. | 1.00000 | 1.00000 | 1.00000 | 18.548 |
| INCLINATION | 0.90039 | 0.90039 | 0.71684 | 15.766 |
| BASE TILT | 1.00000 | 1.00000 | 1.00000 | 15.766 |
| GROUND SLOPE | 1.00000 | 1.00000 | 1.00000 | 15.766 |
| EMBEDMENT | 1.38971 | 1.19486 | 1.19486 | 18.838 |

| | FNC | + | FNQ | + | FNG | = | Q |
|---|---|---|---|---|---|---|---|
| COMBINE EFFECTS of FACTORS | 0.000 | | 14.476 | | 4.362 | | 18.838 |

Since Q > $q_u$ = 10.66 ok

NED FORM 223
27 Sept 49

CORPS OF ENGINEERS, U.S. ARMY

PAGE 162

SUBJECT

COMPUTATION

COMPUTED BY CHECKED BY DATE

Pg. 66- LOAD CASE 8 DEAD +WIND

U.S. Army Engineer Waterways Experiment Station

CBEAR/PC - BEARING CAPACITY ANALYSIS
FOUNDATION AND SOIL DESCRIPTIONS

* FOUNDATION GEOMETRY WIDTH = 4.00 LENGTH = 4.00

| LEFT SIDE: ELEV. (ft) | X-COORD. (ft) | RIGHT SIDE: ELEV. (ft) | X-COORD. (ft) |
|---|---|---|---|
| 0.00 | 0.00 | 0.00 | 4.00 |

FOUNDATION TYPE : FINITE PRESSURE TYPE : GROSS

* SOIL DATA

| LEFT SIDE: ELEV. (ft) | X-COORD. (ft) | RIGHT SIDE: ELEV. (ft) | X-COORD. (ft) |
|---|---|---|---|
| 4.50 | 0.00 | 4.50 | 4.00 |

| FRICTION ANGLE (deg) | COHESION (psf) | UNIT WEIGHT MOIST (pcf) | UNIT WEIGHT SATURATED (pcf) |
|---|---|---|---|
| 30.0 | 0.00 | 125.0 | 125.0 |

N

U.S. Army Engineer Waterways Experiment Station

CBEAR/PC - BEARING CAPACITY ANALYSIS

* SURCHARGE DESCRIPTION
( option not selected )

| LAYER NO. | SURFACE ELEVATION (ft) | UNIT WEIGHT MOIST (pcf) | UNIT WEIGHT SAT. (pcf) |
|---|---|---|---|
| 1 | ******* | *** | *** |
| 2 | ******* | *** | *** |

* SUBSOIL DESCRIPTION
( option not selected )

| ELEVATION (feet) | FRICTION ANGLE | COHESION (psf) | UNIT WT. MOIST | UNIT WT. SAT |
|---|---|---|---|---|
| ******* | *** | **** | *** | *** |

SUBJECT
COMPUTATION
COMPUTED BY CHECKED BY DATE

* WATER TABLE DESCRIPTION
( option not selected )
WATER TABLE ELEVATION : ***** (ft)
UNIT WEIGHT OF WATER : ***** (pcf)

* APPLIED LOAD DESCRIPTION

| | | |
|---|---|---|
| APPLIED LOAD | : 32.3 | (kips) |
| X-COORD. of LOAD | : 2.00 | (ft) |
| Z-COORD. of LOAD | : 2.00 | (ft) |
| ANGLE of INCLINAT. | : 4.3 | (deg.) |

U.S. Army Engineer Waterways Experiment Station

CBEAR/PC - BEARING CAPACITY ANALYSIS

* EFFECTIVE BASE DIMENSIONS : WIDTH = 4.00 LENGTH = 4.00

*** SUMMARY OF BEARING CAPACITY FACTORS ***

| FACTORS | C | Q | G | BEARING CAPACITY (kips/ft**2) |
|---|---|---|---|---|
| BEARING CAP. | 30.14 | 18.40 | 15.67 | 14.268 |
| SHAPE - CONC. | 1.60000 | 1.30000 | 1.30000 | 18.548 |
| SHAPE ECC. | 1.00000 | 1.00000 | 1.00000 | 18.548 |
| INCLINATION | 0.90757 | 0.90757 | 0.73616 | 15.961 |
| BASE TILT | 1.00000 | 1.00000 | 1.00000 | 15.961 |
| GROUND SLOPE | 1.00000 | 1.00000 | 1.00000 | 15.961 |
| EMBEDMENT | 1.38971 | 1.19486 | 1.19486 | 19.071 |

| | FNC | + | FNQ | + | FNG | = | Q |
|---|---|---|---|---|---|---|---|
| COMBINE EFFECTS of FACTORS | 0.000 | | 14.592 | | 4.479 | | 19.071 |

Since Q=19.071 > q = 10.87 ok

SUBJECT
COMPUTATION
COMPUTED BY CHECKED BY DATE

Pg 67 LOAD CASE: DEAD + SNOW + E

U.S. Army Engineer Waterways Experiment Station

CBEAR/PC - BEARING CAPACITY ANALYSIS
FOUNDATION AND SOIL DESCRIPTIONS

* FOUNDATION GEOMETRY WIDTH = 4.00 LENGTH = 4.00

| LEFT SIDE: ELEV. (ft) | X-COORD. (ft) | RIGHT SIDE: ELEV. (ft) | X-COORD. (ft) |
|---|---|---|---|
| 0.00 | 0.00 | 0.00 | 4.00 |

FOUNDATION TYPE : FINITE PRESSURE TYPE : GROSS

* SOIL DATA

| LEFT SIDE: ELEV. (ft) | X-COORD. (ft) | RIGHT SIDE: ELEV. (ft) | X-COORD. (ft) |
|---|---|---|---|
| 4.50 | 0.00 | 4.50 | 4.00 |

| FRICTION ANGLE (deg) | COHESION (psf) | UNIT WEIGHT MOIST (pcf) | UNIT WEIGHT SATURATED (pcf) |
|---|---|---|---|
| 30.0 | 0.00 | 125.0 | 125.0 |

N

U.S. Army Engineer Waterways Experiment Station

CBEAR/PC - BEARING CAPACITY ANALYSIS

* SURCHARGE DESCRIPTION
( option not selected )

| LAYER NO. | SURFACE ELEVATION (ft) | UNIT WEIGHT MOIST (pcf) | UNIT WEIGHT SAT. (pcf) |
|---|---|---|---|
| 1 | ******* | *** | *** |
| 2 | ******* | *** | *** |

* SUBSOIL DESCRIPTION
( option not selected )

| ELEVATION (feet) | FRICTION ANGLE | COHESION (psf) | UNIT WT. MOIST | UNIT WT. SAT. |
|---|---|---|---|---|
| ******* | *** | **** | *** | *** |

SUBJECT

COMPUTATION

COMPUTED BY CHECKED BY DATE

* WATER TABLE DESCRIPTION
( option not selected )
WATER TABLE ELEVATION : ***** (ft)

UNIT WEIGHT OF WATER : ***** (pcf)

* APPLIED LOAD DESCRIPTION

| | | | |
|---|---|---|---|
| APPLIED LOAD | : | 39.2 | (kips) |
| X-COORD. of LOAD | : | 2.00 | (ft) |
| Z-COORD. of LOAD | : | 2.00 | (ft) |
| ANGLE of INCLINAT. | : | 2.0 | (deg.) |

N

U.S. Army Engineer Waterways Experiment Station

CBEAR/PC - BEARING CAPACITY ANALYSIS

* EFFECTIVE BASE DIMENSIONS : WIDTH = 4.00 LENGTH = 4.00

*** SUMMARY OF BEARING CAPACITY FACTORS ***

| FACTORS | C | Q | G | BEARING CAPACITY (kips/ft**2) |
|---|---|---|---|---|
| BEARING CAP. | 30.14 | 18.40 | 15.67 | 14.268 |
| SHAPE - CONC. | 1.60000 | 1.30000 | 1.30000 | 18.548 |
| SHAPE ECC. | 1.00000 | 1.00000 | 1.00000 | 18.548 |
| INCLINATION | 0.95518 | 0.95518 | 0.86862 | 17.276 |
| BASE TILT | 1.00000 | 1.00000 | 1.00000 | 17.276 |
| GROUND SLOPE | 1.00000 | 1.00000 | 1.00000 | 17.276 |
| EMBEDMENT | 1.38971 | 1.19486 | 1.19486 | 20.642 |

| | FNC | + | FNQ | + | FNG | = | Q |
|---|---|---|---|---|---|---|---|
| COMBINE EFFECTS of FACTORS | 0.000 | | 15.357 | | 5.285 | | 20.642 |

Since $Q = 20.6 > q_u = 11.85$ OK

NED FORM 223
27 Sept 49

CORPS OF ENGINEERS, U S ARMY

PAGE

SUBJECT

COMPUTATION

COMPUTED BY CHECKED BY DATE

Pg. 67 LOAD CASE: DEAD + SNOW + .5 WIND

U.S. Army Engineer Waterways Experiment Station

CBEAR/PC - BEARING CAPACITY ANALYSIS
FOUNDATION AND SOIL DESCRIPTIONS

* FOUNDATION GEOMETRY WIDTH = 4.00 LENGTH = 4.00

| LEFT SIDE: ELEV. (ft) | X-COORD. (ft) | RIGHT SIDE: ELEV. (ft) | X-COORD. (ft) |
|---|---|---|---|
| 0.00 | 0.00 | 0.00 | 4.00 |

FOUNDATION TYPE : FINITE PRESSURE TYPE : GROSS

* SOIL DATA

| LEFT SIDE: ELEV. (ft) | X-COORD. (ft) | RIGHT SIDE: ELEV. (ft) | X-COORD. (ft) |
|---|---|---|---|
| 4.50 | 0.00 | 4.50 | 4.00 |

| FRICTION ANGLE (deg) | COHESION (psf) | UNIT WEIGHT MOIST (pcf) | UNIT WEIGHT SATURATED (pcf) |
|---|---|---|---|
| 30.0 | 0.00 | 125.0 | 125.0 |

N

U.S. Army Engineer Waterways Experiment Station

CBEAR/PC - BEARING CAPACITY ANALYSIS

* SURCHARGE DESCRIPTION
( option not selected )

| LAYER NO. | SURFACE ELEVATION (ft) | UNIT WEIGHT MOIST (pcf) | UNIT WEIGHT SAT. (pcf) |
|---|---|---|---|
| 1 | ******* | *** | *** |
| 2 | ******* | *** | *** |

* SUBSOIL DESCRIPTION
( option not selected )

| ELEVATION (feet) | FRICTION ANGLE | COHESION (psf) | UNIT WT. MOIST | UNIT WT. SAT. |
|---|---|---|---|---|
| ******* | *** | **** | *** | *** |

SUBJECT

COMPUTATION

COMPUTED BY CHECKED BY DATE

* WATER TABLE DESCRIPTION
( option not selected )
WATER TABLE ELEVATION : ***** (ft)

UNIT WEIGHT OF WATER : ***** (pcf)

* APPLIED LOAD DESCRIPTION

| | | |
|---|---|---|
| APPLIED LOAD | : 44.8 | (kips) |
| X-COORD. of LOAD | : 2.00 | (ft) |
| Z-COORD. of LOAD | : 2.00 | (ft) |
| ANGLE of INCLINAT. | : 1.5 | (deg.) |

N

U.S. Army Engineer Waterways Experiment Station

CBEAR/PC - BEARING CAPACITY ANALYSIS

* EFFECTIVE BASE DIMENSIONS : WIDTH = 4.00 LENGTH = 4.00

*** SUMMARY OF BEARING CAPACITY FACTORS ***

| FACTORS | C | Q | G | BEARING CAPACITY (kips/ft**2) |
|---|---|---|---|---|
| BEARING CAP. | 30.14 | 19.40 | 15.67 | 14.268 |
| SHAPE - CONC. | 1.60000 | 1.30000 | 1.30000 | 18.548 |
| SHAPE ECC. | 1.00000 | 1.00000 | 1.00000 | 18.548 |
| INCLINATION | 0.96629 | 0.96629 | 0.90060 | 17.588 |
| BASE TILT | 1.00000 | 1.00000 | 1.00000 | 17.586 |
| GROUND SLOPE | 1.00000 | 1.00000 | 1.00000 | 17.588 |
| EMBEDMENT | 1.38971 | 1.19486 | 1.19486 | 21.015 |

| | FNC | + | FNQ | + | FNG | = | Q |
|---|---|---|---|---|---|---|---|
| COMBINE EFFECTS of FACTORS | 0.000 | | 15.536 | | 5.480 | | 21.015 |

Since $Q = 21.05 > q_u = 12.38$ ok

SUBJECT

COMPUTATION

COMPUTED BY CHECKED BY DATE

Pg. 68 LOAD CASE: D + .55 + W

U.S. Army Engineer Waterways Experiment Station

CBEAR/PC - BEARING CAPACITY ANALYSIS
FOUNDATION AND SOIL DESCRIPTIONS

* FOUNDATION GEOMETRY WIDTH = 4.00 LENGTH = 4.00

| LEFT SIDE: ELEV. (ft) | X-COORD. (ft) | RIGHT SIDE: ELEV. (ft) | X-COORD. (ft) |
|---|---|---|---|
| 0.00 | 0.00 | 0.00 | 4.00 |

FOUNDATION TYPE : FINITE PRESSURE TYPE : GROSS

* SOIL DATA

| LEFT SIDE: ELEV. (ft) | X-COORD. (ft) | RIGHT SIDE: ELEV. (ft) | X-COORD. (ft) |
|---|---|---|---|
| 4.50 | 0.00 | 4.50 | 4.00 |

| FRICTION ANGLE (deg) | COHESION (psf) | UNIT WEIGHT MOIST (pcf) | UNIT WEIGHT SATURATED (pcf) |
|---|---|---|---|
| 30.0 | 0.00 | 125.0 | 125.0 |

N

U.S. Army Engineer Waterways Experiment Station

CBEAR/PC - BEARING CAPACITY ANALYSIS

* SURCHARGE DESCRIPTION
( option not selectec )

| LAYER NO. | SURFACE ELEVATION (ft) | UNIT WEIGHT MOIST (pcf) | UNIT WEIGHT SAT. (pcf) |
|---|---|---|---|
| 1 | ******* | *** | *** |
| 2 | ******* | *** | *** |

* SUBSOIL DESCRIPTION
( option not selected )

| ELEVATION (feet) | FRICTION ANGLE | COHESION (psf) | UNIT WT. MOIST | UNIT WT. SAT. |
|---|---|---|---|---|
| ******* | *** | **** | *** | *** |

SUBJECT

COMPUTATION

COMPUTED BY CHECKED BY DATE

* WATER TABLE DESCRIPTION
( option not selected )
WATER TABLE ELEVATION : ***** (ft)

UNIT WEIGHT OF WATER : ***** (pcf)

* APPLIED LOAD DESCRIPTION

| | | |
|---|---|---|
| APPLIED LOAD | : 37.5 | (kips) |
| X-COORD. of LOAD | : 2.00 | (ft) |
| Z-COORD. of LOAD | : 2.00 | (ft) |
| ANGLE of INCLINAT. | : 3.7 | (deg.) |

N

U.S. Army Engineer Waterways Experiment Station

CBEAR/PC - BEARING CAPACITY ANALYSIS

* EFFECTIVE BASE DIMENSIONS : WIDTH = 4.00 LENGTH = 4.00

*** SUMMARY OF BEARING CAPACITY FACTORS ***

| FACTORS | C | Q | G | BEARING CAPACITY (kips/ft**2) |
|---|---|---|---|---|
| BEARING CAP. | 30.14 | 18.40 | 15.67 | 14.268 |
| SHAPE - CONC. | 1.60000 | 1.30000 | 1.30000 | 18.548 |
| SHAPE ECC. | 1.00000 | 1.00000 | 1.00000 | 18.548 |
| INCLINATION | 0.92011 | 0.92011 | 0.77030 | 16.303 |
| BASE TILT | 1.00000 | 1.00000 | 1.00000 | 16.303 |
| GROUND SLOPE | 1.00000 | 1.00000 | 1.00000 | 16.303 |
| EMBEDMENT | 1.39971 | 1.19486 | 1.19486 | 19.480 |

| | FNC | + | FNQ | + | FNG | = | Q |
|---|---|---|---|---|---|---|---|
| COMBINE EFFECTS of FACTORS | 0.000 | | 14.793 | | 4.687 | | 19.480 |

Since Q=19.48 > qu=11.6 ok

SUBJECT RTS - Maintenance

COMPUTATION

COMPUTED BY SAG CHECKED BY DATE 8-25-89

Step Footing Details

27 Sept 49

SUBJECT RTS - Maintenance

CORPS OF ENGINEERS, U.S. ARMY

COMPUTATION

COMPUTED BY SAG

CHECKED BY

DATE 8-25-89

PAGE 11C

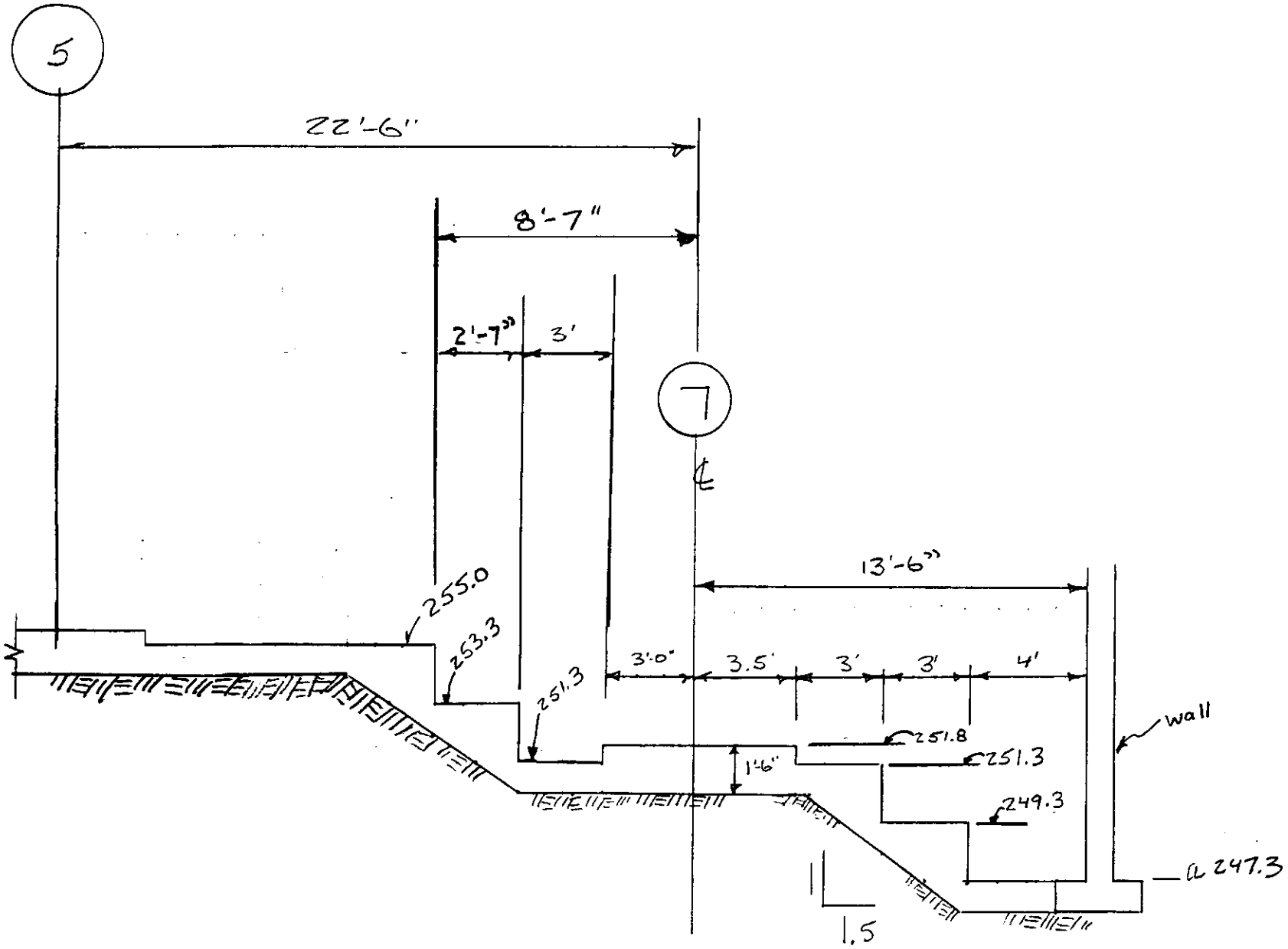


Col. line D

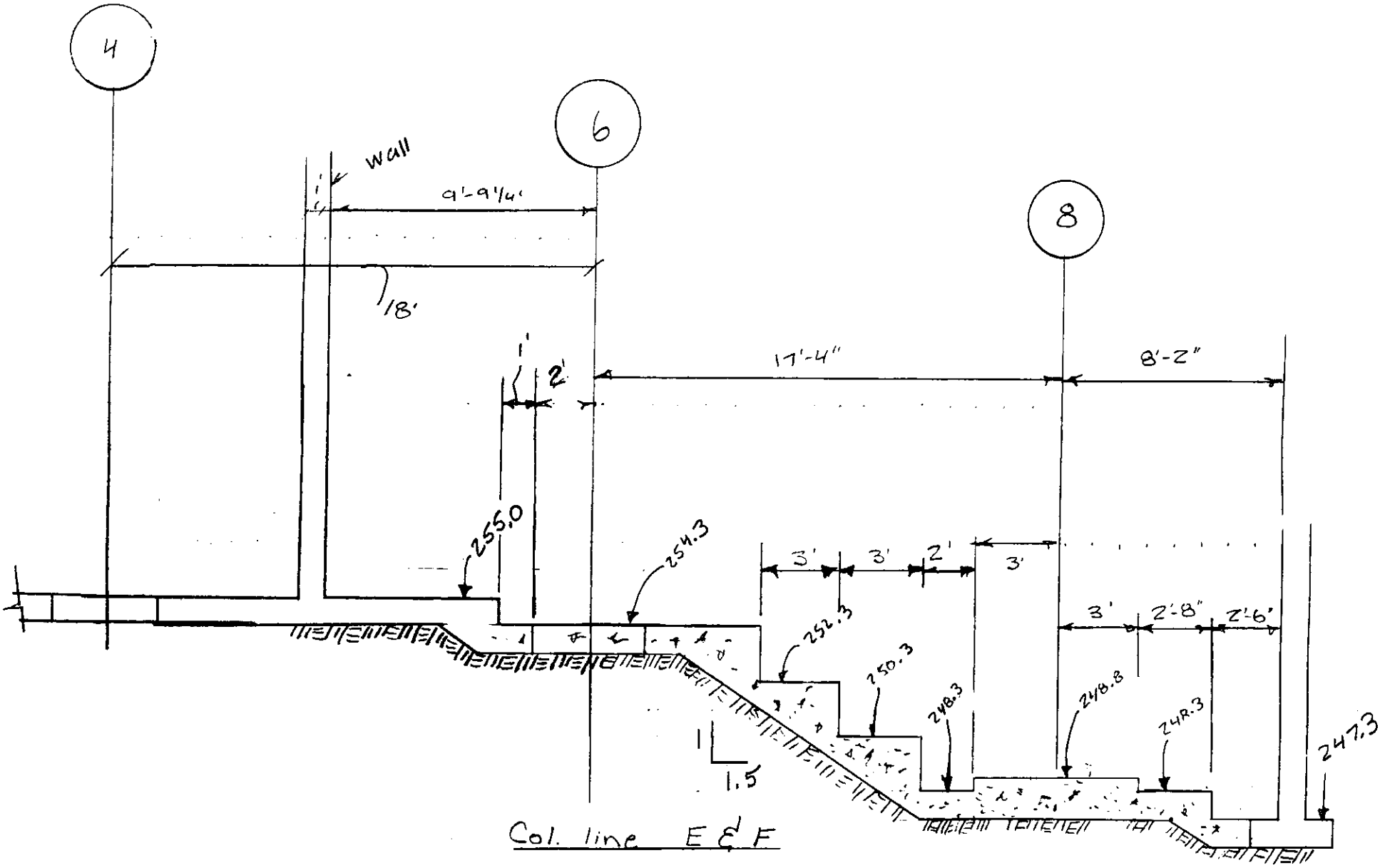
4
6
8
wall
1'
9'-9 1/4"
18'
1'
2'
17'-4"
8'-2"
255.0
254.3
3'
3'
2'
3'
252.3
250.3
248.3
248.3
248.3
3'
2'-8"
2'-6"
247.3
1
1.5

Col. line E & F

21 Sept 49

CORPS OF ENGINEERS, U.S. ARMY

SUBJECT RTS-Maintenance

PAGE 111

COMPUTATION

COMPUTED BY SAG

CHECKED BY

DATE 8-25-89

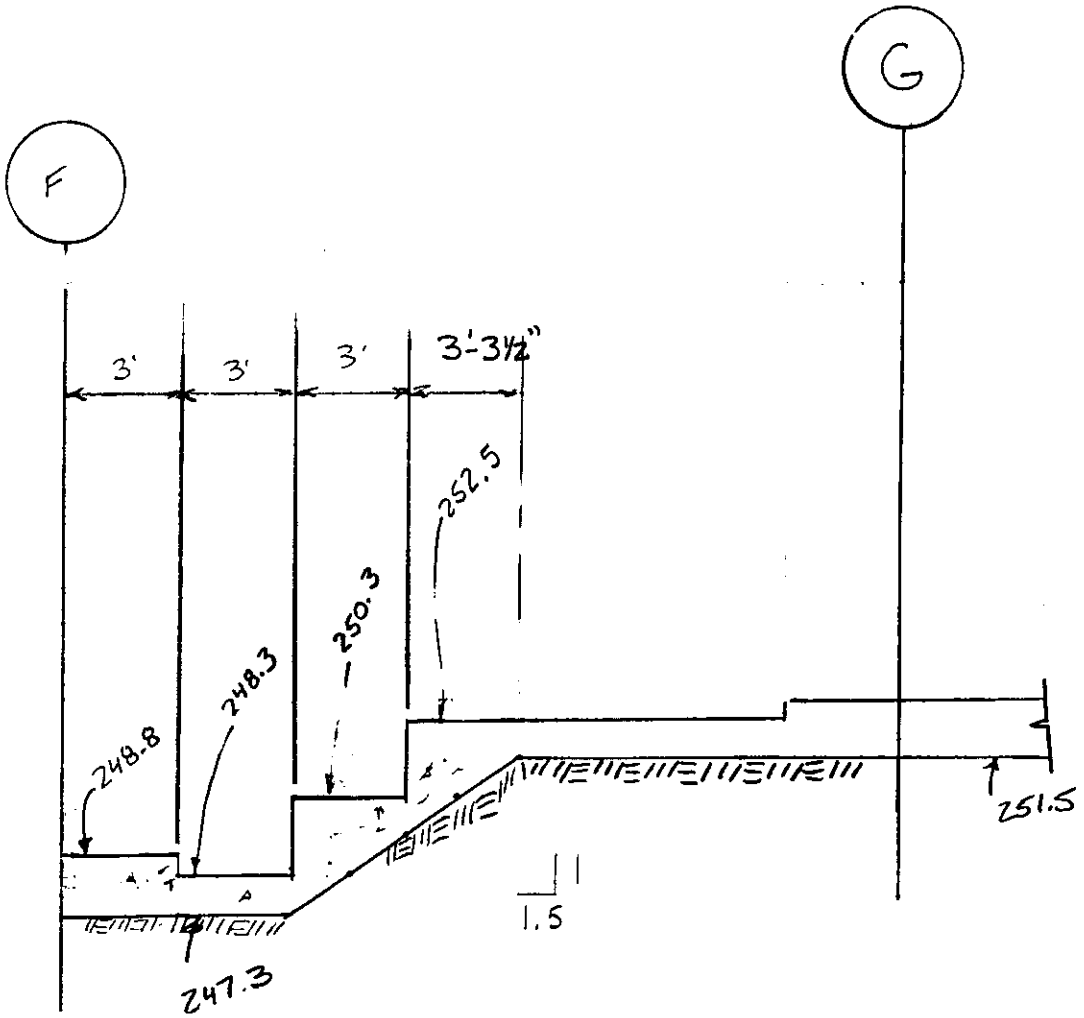


Col. line 8

27 Sept 49

SUBJECT RTS- Maintenance

CORPS OF ENGINEERS, U.S. ARMY

PAGE 110

COMPUTATION

COMPUTED BY SAG

CHECKED BY

DATE 8-25-89

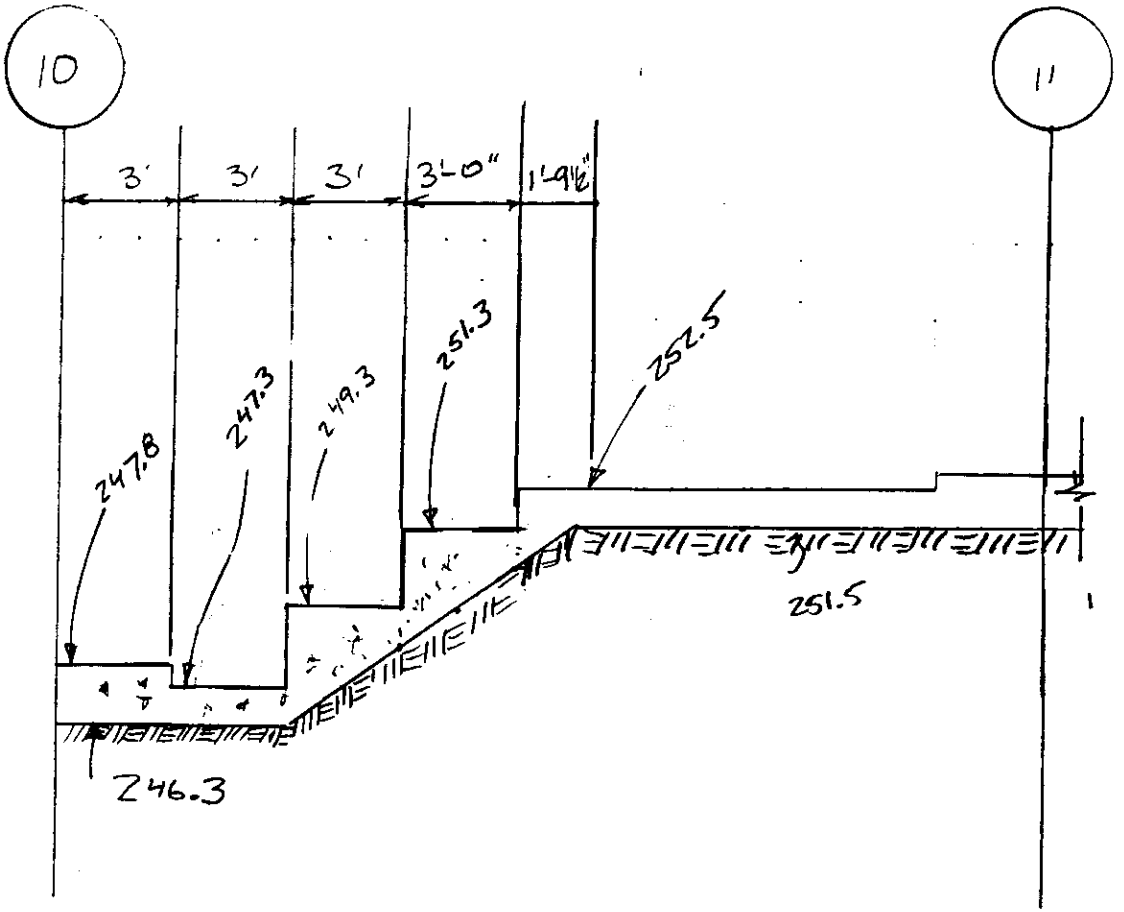


Col. line D

27 Sept 49

CORPS OF ENGINEERS, U.S. ARMY

PAGE 176

SUBJECT RTS - Maintenance

COMPUTATION

COMPUTED BY SAG CHECKED BY DATE 8-25-89

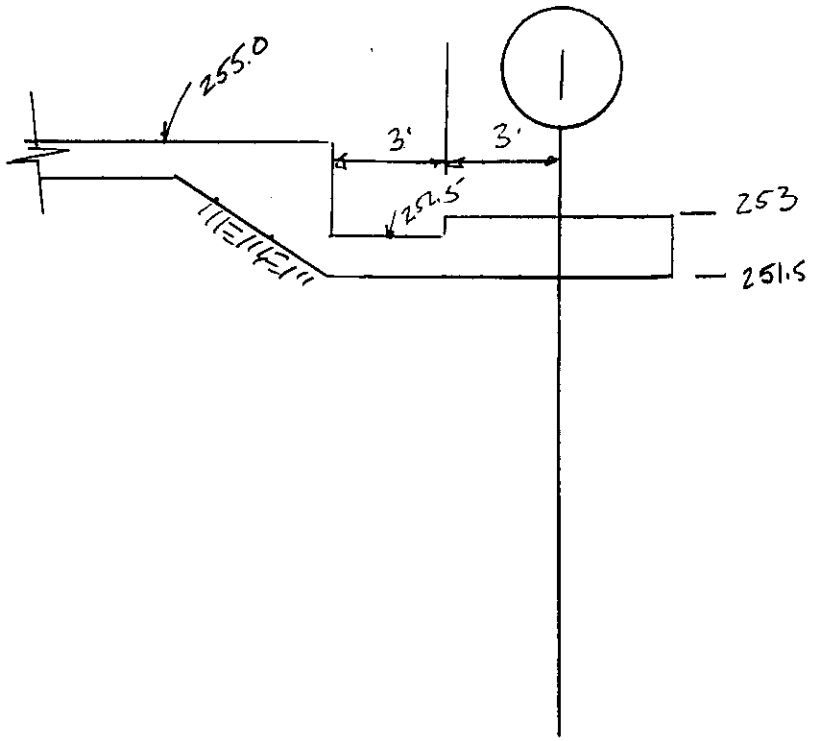


Col line E

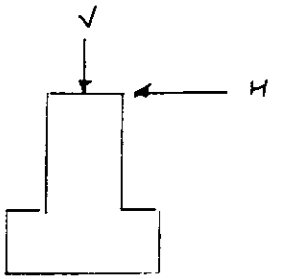


Exterior Footing
or
Footing with column

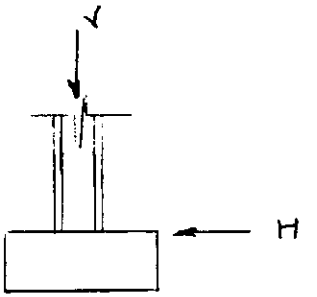


INTERIOR
Footing

| Footing Type | Foundation Loads in Kips (K) | | | | | | | | | | | | | | | |
|---|---|---|---|---|---|---|---|---|---|---|---|---|---|---|---|---|
| | LC1 & LC2 | | LC3 | | LC4 | | LC5 | | LC6 | | LC7 | | LC8 | | LC9 | |
| | H | V | H | V | H | V | H | V | H | V | H | V | H | V | H | V |
| A, A1, A2 A3, A4, A5 | 0 | 84.3 | 11.0 | 122.0 | 10.6 | 36.4 | 11.0 | 143.7 | 2.78 | 52.77 | 17.74 | 116.9 | 3.4 | 81.2 | 9.3 | 50.0 |
| B | 0 | 37.6 | NA | NA | 5.8 | 16.7 | NA | NA | 1.4 | 29.5 | NA | NA | 1.2 | 35.1 | 2.41 | 27.8 |
| C | 0 | 26.7 | NA | NA | 7.8 | 26.7 | NA | NA | 1.8 | 25.4 | NA | NA | 3.9 | 26.2 | 7.8 | 23.0 |

where:
LC1= D + L
LC2= D + S
LC3= D + A
LC4= D + W (or E)
LC5= D + S + A
LC6= D + S + E
LC7= D + .5W (or 1.0E) + A
LC8= D + S + .5W
LC9= D + .5S + W

NA= not applicable

SUBJECT RTS - Maintenance

COMPUTATION LOAD TABLE

COMPUTED BY SAG CHECKED BY DATE 8-22-89

Footings A, A1, A2
A3, A4, A5

LC1 & LC2 : D+L, D+S

| | | |
|---|---|---|
| Page | 25 | V=73.4, H=0 |
| | 55 | V=84.3, " " |
| | 60 | V=79.2, " " |
| | 91 | V=74.7, " " |
| | 83 | V=83.3, " " |

LC3 : D+A

| | | | | |
|---|---|---|---|---|
| page | 27 | FS= 2.67, | V=120.3, | H= 11.02 |
| | 83 | FS= 2.64, | V=122.02, | H=11.02 |

LC4 : D+W (or E)

| | | | |
|---|---|---|---|
| 27 | FS= 4.54, | V= 36.2, | H=9.3 |
| 36 | FS=5.49, | V= 27.4, | H=7.58 |
| 84 | FS= 5.04, | V= 48.18, | H= 8.789 |
| 93 | FS= 3.57, | V= 36.4, | H= 10.58 |

LC5 : D+S+A

| | | | |
|---|---|---|---|
| 29 | FS=2.43, | V=140.89, | H=11.02 |
| 34 | FS=2.4, | V=143.72, | H= 11.02 |
| 94 | FS=2.4, | V=141.65, | H=11.02 |
| 86 | FS= 3.74, | V=147.5, | H= 11.02 |

LC6 : D+S+E

| | | | |
|---|---|---|---|
| 29 | FS= 6.03, | V= 52.77, | H=2.78 |

LC7: D+.5W (or 1.0E)+A

| | | | |
|---|---|---|---|
| 30 | FS= 2.35, | V= 115.4, | H= 15.65 |
| 33 | FS= 2.32, | V= 116.92, | H=15.9 |
| 37 | FS= 2.51, | V=105.52, | H=14.81 |
| 42 | FS=2.06, | V= 116.92, | H=17.74 |
| 85 | FS=2.74, | V= 126.29, | H= 16.52 |
| 95 | FS=2.08, | V= 109.76, | H=17.43 |

SUBJECT RTS-Maintenance

COMPUTATION LOAD Table

COMPUTED BY SAG CHECKED BY DATE 8-22-89

LC8: D+S+.5W

Pg 30 FS= 4.7, V= 68.56, H= 4.63
Pg 57 FS= 4.37, V= 81.23, H= 3.44

LC9: D+.5S+W

Pg 31 FS= 4.21, V=49.97, H=9.27
Pg 58 FS= 4.61, V=51.76, H=4.61

## References

1. "Building Code Requirements For Reinforced Concrete", American Concrete Institute 318-83

2. "Structural Design Guide to the ACI Building Code", Rice, Hoffman, Gustafson, Gouwens, 1985

3. "Low Rise Building Systems Manual", Metal Building Manufacturers Association, 1986.

4. "Load Assumptions for Buildings", Army TM5-809-1, March 1986.

5. "Manual of Steel Construction", American Institute of Steel Construction, INC. (AISC-1980)

6. "Soils and Geology Procedures for Foundation Design of Buildings and Other Structures" Army TM5-818-1, October 1983

7. "Concrete Floor Slabs on Grade Subjected to Heavy Loads" Army TM5-809-12, August 1987

8. "Specifications for the Design of Cold-Formed Steel Structural Members", American Iron and Steel Institute, September 1980.

9. "Reinforced Masonry Engineering Handbook" Amrhein, James E, 1983

10. "Seismic Design For Buildings" Army TM5-809-10, February 1982

11. "Masonry Structural Design For Buildings" Army TM5-809-3, August 1982

# Appendix A

- Crane dimensions
- Frame Computer Run

A2

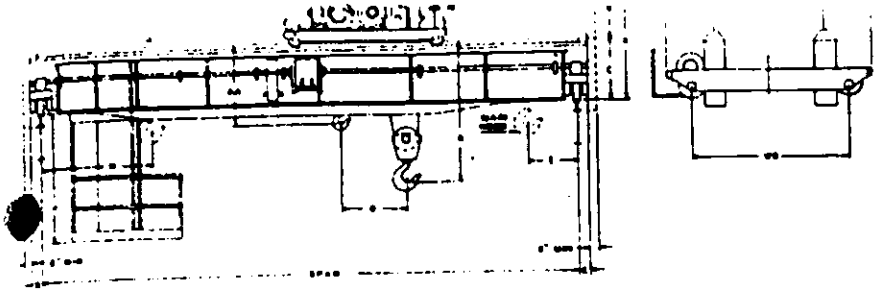

# Standard Clearance Dimensions

## 4-WHEEL CRANE

| CAPACITY (TONS) MAIN HOIST | CAPACITY (TONS) AUX HOIST | SPAN (FEET) | A MAIN HOIST | AA AUX HOIST | B | C | D | E | H | I | J | L | M/N | WB | X | DIA OF WHEELS | MAXIMUM LOAD PER WHEEL (POUNDS) |
|---|---|---|---|---|---|---|---|---|---|---|---|---|---|---|---|---|---|
| 5 | — | 40 | 3'-6" | — | 2'-6" | 3'-2" | — | 9" | 3'-3" | 2'-6" | 8'-0" | 4'-6" | 6'-0½" | 9'-0" | 6'-0" | 18" | 15,000 |
| | | 60 | | | | 3'-10" | | | | | | 5'-9" | 6'-8" | 10'-3" | 6'-8" | | 17,600 |
| | | 75 | | | | 4'-4" | | | | | | 8'-0" | 7'-9½" | 12'-6" | 7'-2" | | 21,000 |
| | | 100 | | | | 5'-2" | | 9½" | | | 8'-6" | 10'-0" | 9'-6½" | 16'-0" | 8'-0" | | 28,000 |
| 10 | 3 | 40 | 3'-9" | 2'-3" | 3'-1" | 3'-4" | 2'-2" | 9½" | 4'-0" | 2'-6" | 8'-0" | 5'-6" | 6'-0½" | 9'-0" | 6'-9" | 18" | 21,000 |
| | | 60 | | | | 4'-0" | | | | | | 6'-6" | 6'-8" | 10'-3" | 7'-5" | | 22,400 |
| | | 75 | | | | 4'-6" | | | | | 8'-3" | 6'-6" | 7'-9½" | 12'-6" | 7'-11" | | 26,400 |
| | | 100 | | | | 5'-4" | | | | | 8'-6" | 7'-6" | 9'-6½" | 16'-0" | 8'-9" | | 35,000 |
| 15 | 3 | 40 | 4'-0" | 1'-9½" | 3'-4½" | 3'-6" | 2'-2" | 9½" | 4'-0" | 2'-6" | 8'-0" | 6'-0" | 6'-4" | 9'-6" | 7'-2½" | 18" | 26,800 |
| | | 60 | | | | 4'-2" | | | | | | 7'-0" | 6'-11" | 10'-9" | 7'-10½" | | 28,200 |
| | | 75 | | | | 4'-8" | | | | | 8'-3" | 8'-0" | 7'-9½" | 12'-6" | 8'-4½" | | 32,900 |
| | | 100 | | | | 5'-6" | | | | | 8'-6" | 9'-0" | 9'-6½" | 16'-0" | 9'-2½" | | 41,800 |
| 20 | 5 | 40 | 4'-9" | 2'-3" | 3'-4½" | 3'-8½" | 2'-6" | 9½" | 4'-6" | 3'-6" | 8'-0" | 5'-6" | 6'-9½" | 10'-6" | 7'-5" | 18" | 37,400 |
| | | 60 | | | | 4'-4½" | | | | | | 6'-6" | 7'-0½" | 11'-0" | 8'-1" | | 39,000 |
| | | 75 | | | | 4'-10½" | | | | | 8'-3" | 7'-0" | 7'-9½" | 12'-6" | 8'-7" | | 44,400 |
| | | 100 | | | | 5'-10½" | | 10½" | | | 8'-6" | 9'-0" | 9'-8½" | 16'-0" | 9'-7" | 21" | 53,700 |
| 25 | 5 | 40 | 5'-6" | 1'-8½" | 3'-11" | 3'-10" | 2'-6" | 9½" | 4'-6" | 3'-6" | 8'-0" | 6'-0" | 7'-3½" | 11'-6" | 8'-1" | 18" | 41,100 |
| | | 60 | | | | 4'-6" | | | | | | 6'-0" | 7'-5" | 11'-9" | 8'-9" | | 42,700 |
| | | 75 | | | | 5'-0" | | 10½" | | | 8'-3" | 7'-0" | 7'-11½" | 12'-6" | 9'-3" | 21" | 51,300 |
| | | 100 | | | | 5'-10" | | | | | 8'-6" | 7'-6" | 9'-8½" | 16'-0" | 10'-1" | | 58,900 |
| 30 | 5 | 40 | 6'-0" | 3'-0" | 3'-11" | 4'-0" | 2'-11" | 10½" | 5'-3" | 4'-0" | 8'-0" | 6'-0" | 7'-5½" | 11'-6" | 8'-3" | 21" | 50,600 |
| | | 60 | | | | 4'-8" | | | | | | 6'-6" | 7'-7" | 11'-9" | 8'-11" | | 52,900 |
| | | 75 | | | | 5'-2" | | | | | 8'-3" | 7'-0" | 7'-11½" | 12'-6" | 9'-5" | | 59,500 |
| | | 100 | | | | 6'-2½" | | 12" | | | 8'-6" | 8'-0" | 9'-10" | 16'-0" | 10'-5½" | 24" | 70,700 |
| 40 | 10 | 40 | 6'-6" | 3'-0" | 3'-11" | 4'-2" | 2'-11" | 10½" | 5'-3" | 4'-0" | 8'-0" | 8'-0" | 8'-5½" | 13'-6" | 8'-5" | 21" | 64,500 |
| | | 60 | | | | 5'-0" | | 12" | | | | 8'-0" | 8'-8½" | 13'-9" | 9'-3" | 24" | 66,700 |
| | | 75 | | | | 5'-6" | | | | | 8'-3" | 10'-0" | 9'-1" | 14'-6" | 9'-9" | | 75,100 |
| | | 100 | | | | 6'-2" | | 13" | | | 8'-6" | 10'-0" | 9'-11" | 16'-0" | 10'-5" | 26" | 85,700 |
| 50 | 10 | 40 | 6'-8½" | 3'-0" | 3'-11" | 4'-7" | 2'-9" | 12" | 5'-3" | 4'-0" | 8'-0" | 9'-0" | 8'-5½" | 13'-6" | 8'-10" | 21" | 77,800 |
| | | 60 | | | | 5'-1" | | 13" | | | | 9'-0" | 8'-9½" | 13'-9" | 9'-4" | 26" | 80,000 |
| | | 75 | | | | 5'-7" | | | | | 8'-3" | 10'-0" | 9'-2" | 14'-6" | 9'-10" | | 89,200 |
| | | 100 | | | | 6'-5" | | | | | 8'-6" | 10'-0" | 9'-11" | 16'-0" | 10'-8" | 30" | 102,400 |
| [illegible] | 10 | 40 | 7'-3" | 4'-9" | 5'-0" | 4'-6" | 3'-2" | 13" | 6'-0" | 4'-9" | 8'-3" | 10'-0" | 9'-2" | 14'-6" | 9'-10" | 26" | 93,200 |
| | | 60 | | | | 5'-3" | | | | | | 11'-0" | 9'-5" | 15'-0" | 10'-7" | | 94,600 |

70-2079

*Clearance dimensions listed here are for reference only . . . and should not be used for construction purposes.*
*These dimensions apply to industrial duty cranes which operate at moderate speeds and with standard lifts*

NED FORM 223
27 Sept 49

NEW ENGLAND DIVISION
CORPS OF ENGINEERS, U.S. ARMY

SUBJECT RTS-Maint
COMPUTATION Frame -C Frame
COMPUTED BY SAG
CHECKED BY
DATE

PAGE A2

RTS-Maint. Crane Frame

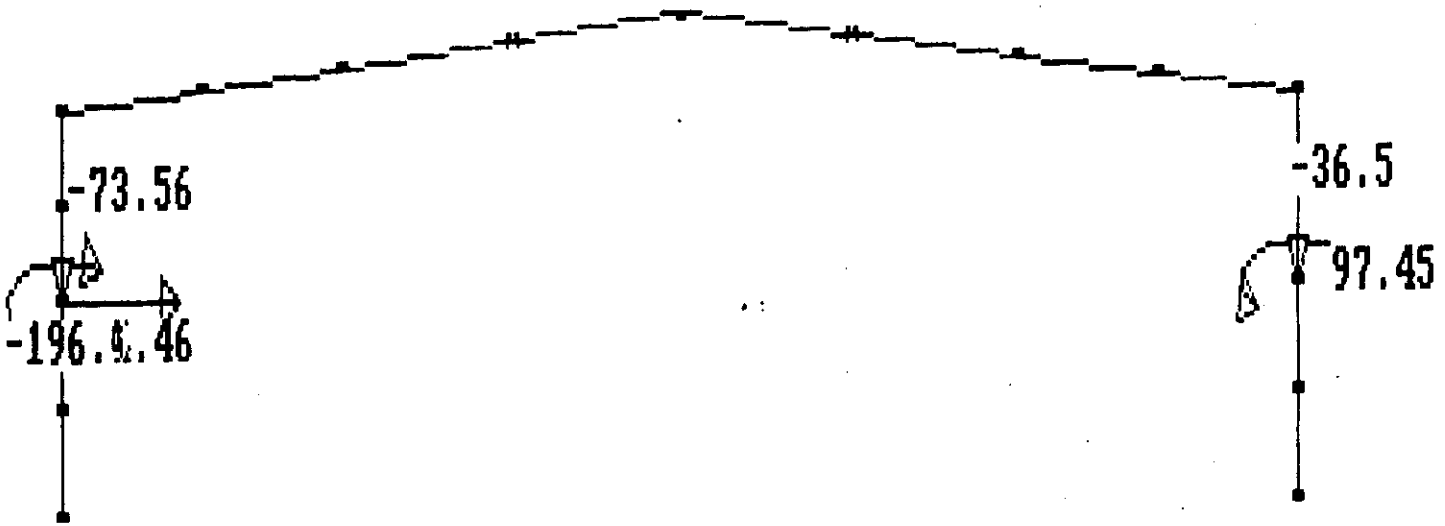


LOAD CASE 1 Crane Load 6/12/89 17.49.32

RTS-Maint. Crane Frame

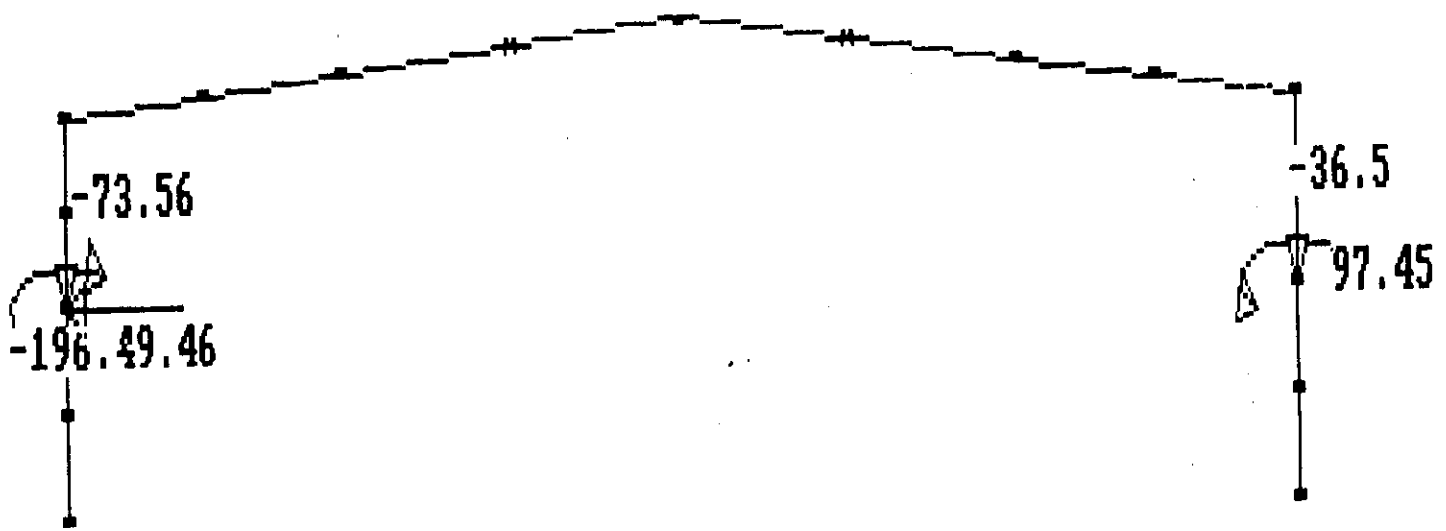


LOAD CASE 2 Opp Lat Force 6/12/89 17.49.32

NED FORM 223
27 Sept 49

NEW ENGLAND DIVISION
CORPS OF ENGINEERS, U.S. ARMY

SUBJECT RTS-Maint Frame C-Frame
COMPUTATION
COMPUTED BY SAG CHECKED BY DATE

PAGE A4

RTS-Maint. Crane Frame

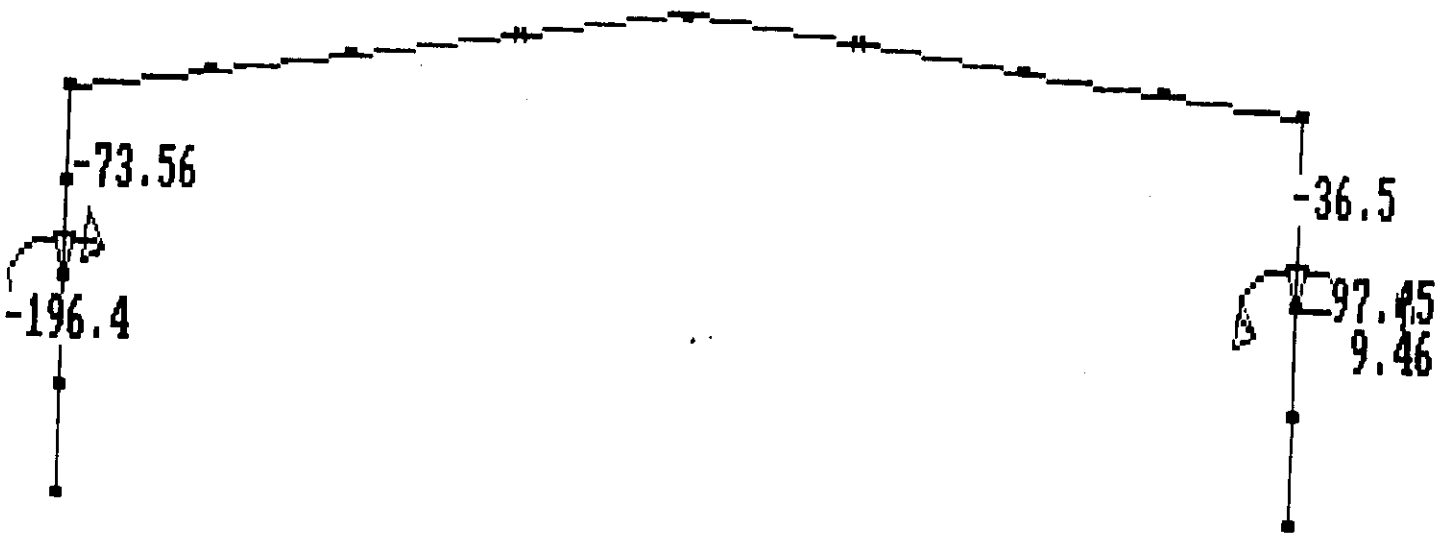


LOAD CASE 3

6/12/89 17.49.32

NED FORM 223
27 Sept 49

NEW ENGLAND DIVISION
CORPS OF ENGINEERS, U.S. ARMY

SUBJECT RTS-Maint Crane Frame
COMPUTATION
COMPUTED BY SAG
CHECKED BY
DATE

PAGE A5

NED FORM 223
27 Sept 49

NEW ENGLAND DIVISION
CORPS OF ENGINEERS, U.S. ARMY



SUBJECT: OTS-Maint.
COMPUTATION: Frame - C Frame
COMPUTED BY: SAG  CHECKED BY:  DATE:

[illegible] Frame Frame

*** JOINT DATA ***

| JOINT | X (FT) | Y (FT) | FIXITY X | FIXITY Y | FIXITY R | KX (KIP / IN) | KY (KIP / IN) | KR (IN-KIP/RAD) |
|---|---|---|---|---|---|---|---|---|
| 1 | .00 | .00 | * | * | | | | |
| 2 | 70.67 | .00 | * | * | | | | |
| 3 | .00 | 8.21 | | | | | | |
| 4 | 70.67 | 8.21 | | | | | | |
| 5 | .00 | 16.42 | | | | | | |
| 6 | 70.67 | 16.42 | | | | | | |
| 7 | .00 | 23.71 | | | | | | |
| 8 | 70.67 | 23.71 | | | | | | |
| 9 | .00 | 31.00 | | | | | | |
| 10 | 70.67 | 31.00 | | | | | | |
| 11 | 5.00 | 32.47 | | | | | | |
| 12 | 15.00 | 33.94 | | | | | | |
| 13 | 25.66 | 35.72 | | | | | | |
| 14 | 35.77 | 37.50 | | | | | | |
| 15 | 45.00 | 35.72 | | | | | | |
| 16 | 54.66 | 33.94 | | | | | | |
| 17 | 62.66 | 32.47 | | | | | | |

*** MEMBER DATA ***

| MEMBER | END A | END B | LENGTH FT | I IN**4 | A IN**2 | AS IN**2 | E KSI | G KSI |
|---|---|---|---|---|---|---|---|---|
| 1 | 1 | 3 | 8.21 | .4492E-04 | .1650E+02 | .1650E+02 | .2900E+05 | .1115E+[illegible] |
| 2 | 2 | 4 | 8.21 | .4492E+04 | .1650E+02 | .1650E+02 | .2900E+05 | .1115E+[illegible] |
| 3 | 3 | 5 | 8.21 | .1658E+05 | .2550E+02 | .2550E+02 | .2900E+05 | .1115E+[illegible] |
| 4 | 4 | 6 | 8.21 | .1658E-05 | .2550E+02 | .2550E+02 | .2900E+05 | .1115E+[illegible] |
| 5 | 5 | 7 | 7.29 | .4106E+05 | .3450E+02 | .3450E+02 | .2900E+05 | .1115E+[illegible] |
| 6 | 6 | 8 | 7.29 | .4106E+05 | .3450E+02 | .3450E+02 | .2900E+05 | .1115E+[illegible] |
| 7 | 7 | 9 | 7.29 | .8231E+05 | .4350E-02 | .4350E+02 | .2900E+05 | .1115E+[illegible] |
| 8 | 8 | 10 | 7.29 | .8231E+05 | .4350E+02 | .4350E+02 | .2900E+05 | .1115E+[illegible] |
| 9 | 9 | 11 | 8.13 | .7409E+05 | .4200E-02 | .4200E+02 | .2900E+05 | .1115E+[illegible] |
| 10 | 17 | 10 | 8.14 | .7409E+05 | .4200E+02 | .4200E+02 | .2900E+05 | .1115E+[illegible] |
| 11 | 11 | 12 | 8.13 | .2700E+05 | .3000E+02 | .3000E+02 | .2900E+05 | .1115E+[illegible] |
| 12 | 16 | 17 | 8.13 | .2700E+05 | .3000E+02 | .3000E+02 | .2900E+05 | .1115E+[illegible] |
| 13 | 12 | 13 | 9.82 | .1758E+05 | .2600E+02 | .2600E+02 | .2900E+05 | .1115E+[illegible] |
| 14 | 15 | 16 | 9.82 | .1758E+05 | .2600E+02 | .2600E+02 | .2900E+05 | .1115E+[illegible] |
| 15 | 13 | 14 | 9.83 | .3594E+05 | .3300E+02 | .3300E+02 | .2900E+05 | .1115E+[illegible] |
| 16 | 14 | 15 | 9.83 | .3594E+05 | .3300E+02 | .3300E+02 | .2900E+05 | .1115E+[illegible] |

NED FORM 223
27 Sept 49

NEW ENGLAND DIVISION
CORPS OF ENGINEERS, U.S. ARMY



SUBJECT RTS - Maint
COMPUTATION Frame - C-frame
COMPUTED BY SAG CHECKED BY DATE

1 *** LOAD CASE 1 Frame Load

| JOINT | FORCE X KIP | FORCE Y KIP | MOMENT FT-KIP |
|---|---|---|---|
| 5 | .9460E+01 | -.7356E+02 | -.1964E+03 |
| 6 | .0000E+00 | -.3650E+02 | .9745E+02 |

1 *** LOAD CASE 2 Opp Lat Force

| JOINT | FORCE X KIP | FORCE Y KIP | MOMENT FT-KIP |
|---|---|---|---|
| 5 | -.9460E+01 | -.7356E+02 | -.1964E+03 |
| 6 | .0000E+00 | -.3650E+02 | .9745E+02 |

1 *** LOAD CASE 3

| JOINT | FORCE X KIP | FORCE Y KIP | MOMENT FT-KIP |
|---|---|---|---|
| 5 | .0000E+00 | -.7356E+02 | -.1964E+03 |
| 6 | .9460E+01 | -.3650E+02 | .9745E+02 |

E

JOINT DISPLACEMENTS

| JOINT | DX IN | DY IN | DR RAD |
|---|---|---|---|
| 1 | .0000E+00 | .0000E+00 | -.6603E-03 |
| 2 | .0000E+00 | .0000E+00 | -.7228E-03 |
| 3 | .6305E-01 | -.1440E-01 | -.3519E-03 |
| 4 | .6669E-01 | -.8256E-02 | -.4736E-03 |
| 5 | .1146E+00 | -.2073E-01 | -.4637E-03 |
| 6 | .1074E+00 | -.1360E-01 | -.2804E-03 |
| 7 | .1449E+00 | -.2341E-01 | -.2695E-03 |
| 8 | .1324E+00 | -.1391E-01 | -.2504E-03 |
| 9 | .1638E+00 | -.2316E-01 | -.1936E-03 |
| 10 | .1541E+00 | -.1416E-01 | -.2145E-03 |
| 11 | .1659E+00 | -.3731E-01 | -.1230E-03 |
| 12 | .1659E+00 | -.4066E-01 | .1326E-04 |
| 13 | .1627E+00 | -.2854E-01 | .1464E-03 |
| 14 | .1584E+00 | -.9179E-02 | .1514E-03 |
| 15 | .1605E+00 | .7032E-02 | .1072E-03 |
| 16 | .1603E+00 | .1227E-01 | -.4725E-04 |
| 17 | .1579E+00 | .3268E-02 | -.1621E-03 |

MEMBER END FORCES

| MEMBER | JOINT | AXIAL KIP | SHEAR KIP | MOMENT IN-KIP | MOMENT EXTREMA IN-KIP | LOCATION IN |
|---|---|---|---|---|---|---|
| 1 | 1 | -.6996E+02 | .2911E+01 | .0000E+00 | .2868E+03 | 98.52 |
| | 3 | -.6996E+02 | -.2911E+01 | .2868E+03 | .0000E+00 | .00 |
| 2 | 2 | -.4010E+02 | .6549E+01 | .0000E+00 | .6452E+03 | 98.52 |
| | 4 | -.4010E+02 | -.6549E+01 | .6452E+03 | .0000E-00 | .00 |
| 3 | 3 | -.6996E+02 | .2911E+01 | .2868E+03 | .5736E+03 | 98.52 |
| | 5 | -.6996E+02 | -.2911E+01 | .5736E+03 | .2868E+03 | .00 |
| 4 | 4 | -.4010E+02 | .6549E+01 | .6452E+03 | .1290E+04 | 98.52 |
| | 6 | -.4010E+02 | -.6549E+01 | .1290E+04 | .6452E+03 | .00 |
| 5 | 5 | .3598E+01 | -.6549E+01 | .2930E+04 | .2930E+04 | .00 |
| | 7 | .3598E+01 | .6549E+01 | .2358E+04 | .2358E+04 | 87.48 |
| 6 | 6 | -.3598E+01 | .6549E+01 | .1210E+03 | .6939E+03 | 87.48 |
| | 8 | -.3598E+01 | -.6549E+01 | .6939E+03 | .1210E+03 | .00 |
| 7 | 7 | .3598E+01 | -.6549E+01 | .2358E+04 | .2358E+04 | .00 |
| | 9 | .3598E+01 | .6549E+01 | .1785E+04 | .1785E+04 | 87.48 |
| 8 | 8 | -.3598E+01 | .6549E+01 | .6939E+03 | .1267E+04 | 87.48 |
| | 10 | -.3598E+01 | -.6549E+01 | .1267E+04 | .6939E+03 | .00 |
| 9 | 9 | -.5791E+01 | -.4722E+01 | .1785E+04 | .1785E+04 | .00 |
| | 11 | -.5791E+01 | .4722E+01 | .1324E+04 | .1324E+04 | 97.61 |
| 10 | 17 | -.7091E+01 | -.2357E+01 | -.1036E+04 | -.1036E+04 | .00 |
| | 10 | -.7091E+01 | .2357E+01 | -.1267E+04 | -.1267E+04 | 97.73 |
| 11 | 11 | -.5791E+01 | -.4722E+01 | .1324E+04 | .1324E+04 | .00 |
| | 12 | -.5791E+01 | .4722E+01 | .8627E+03 | .8627E+03 | 97.61 |
| 12 | 16 | -.7091E+01 | -.2355E+01 | -.8065E+03 | -.8065E+03 | .00 |
| | 17 | -.7091E+01 | .2355E+01 | -.1036E+04 | -.1036E+04 | 97.61 |
| 13 | 12 | -.5788E+01 | -.4725E+01 | .8627E-03 | .8627E+03 | .00 |
| | 13 | -.5788E+01 | .4725E+01 | .3057E+03 | .3057E+03 | 117.87 |
| 14 | 15 | -.7092E+01 | -.2352E+01 | -.5293E+03 | -.5293E+03 | .00 |
| | 16 | -.7092E+01 | .2352E+01 | -.8065E+03 | -.8065E+03 | 117.87 |
| 15 | 13 | -.5789E+01 | -.4724E+01 | .3057E+03 | .3057E+03 | .00 |
| | 14 | -.5789E+01 | .4724E+01 | -.2517E+03 | -.2517E+03 | 117.99 |
| 16 | 14 | -.7092E+01 | -.2353E+01 | -.2517E+03 | -.2517E+03 | .00 |
| | 15 | -.7092E+01 | .2353E+01 | -.5293E+03 | -.5293E+03 | 117.99 |

NED FORM 223
27 Sept 49

NEW ENGLAND DIVISION
CORPS OF ENGINEERS, U.S. ARMY



SUBJECT RTJ- Maint
COMPUTATION Frame C-Frame
COMPUTED BY SAG CHECKED BY DATE

STRUCTURE REACTIONS

| JOINT | FORCE X KIP | FORCE Y KIP | MOMENT IN-KIP |
|---|---|---|---|
| 1 | -.2911E+01 | .6996E+02 | .0000E+00 |
| 2 | -.6549E+01 | .4010E+02 | .0000E+00 |
| TOTAL | -.9460E+01 | .1101E+03 | |

LOAD CASE 2 Soc Lat Force

JOINT DISPLACEMENTS

| JOINT | DX IN | DY IN | DR RAD |
|---|---|---|---|
| 1 | .0000E+00 | .0000E+00 | .7028E-03 |
| 2 | .0000E+00 | .0000E+00 | .1373E-02 |
| 3 | -.6166E-01 | -.1531E-01 | .2925E-03 |
| 4 | -.1459E-01 | -.7351E-02 | .1952E-03 |
| 5 | -.7969E-01 | -.2522E-01 | -.4099E-04 |
| 6 | -.3534E-01 | -.1211E-01 | .2422E-03 |
| 7 | -.7691E-01 | -.2529E-01 | -.3226E-04 |
| 8 | -.5355E-01 | -.1204E-01 | .1838E-03 |
| 9 | -.7437E-01 | -.2534E-01 | -.3239E-04 |
| 10 | -.6825E-01 | -.1198E-01 | .1596E-03 |
| 11 | -.7368E-01 | -.2878E-01 | -.3563E-04 |
| 12 | -.7339E-01 | -.3249E-01 | -.3703E-04 |
| 13 | -.7290E-01 | -.3659E-01 | -.2708E-04 |
| 14 | -.7261E-01 | -.3932E-01 | -.1546E-04 |
| 15 | -.7296E-01 | -.4028E-01 | .0000E+00 |
| 16 | -.7237E-01 | -.3588E-01 | .8075E-04 |
| 17 | -.7069E-01 | -.2591E-01 | .1350E-03 |

NED FORM 223
27 Sept 49

NEW ENGLAND DIVISION
CORPS OF ENGINEERS, U.S. ARMY



SUBJECT RTS - Maint
COMPUTATION Frame - C Frame
COMPUTED BY SAG CHECKED BY DATE

MEMBER END FORCES

| MEMBER | JOINT | AXIAL KIP | SHEAR KIP | MOMENT IN-KIP | MOMENT EXTREMA IN-KIP | LOCATION IN |
|---|---|---|---|---|---|---|
| 1 | 1 | -.7436E+02 | -.1101E+02 | .0000E+00 | .0000E+00 | .00 |
| | 3 | -.7436E+02 | .1101E+02 | -.1085E+04 | -.1085E+04 | 98.52 |
| 2 | 2 | -.3570E+02 | .1553E+01 | .0000E+00 | .1530E+03 | 98.52 |
| | 4 | -.3570E+02 | -.1553E+01 | .1530E+03 | .0000E+00 | .00 |
| 3 | 3 | -.7436E+02 | -.1101E+02 | -.1085E+04 | -.1085E+04 | .00 |
| | 5 | -.7436E+02 | .1101E+02 | -.2170E+04 | -.2170E+04 | 98.52 |
| 4 | 4 | -.3570E+02 | .1553E+01 | .1530E+03 | .3060E+03 | 98.52 |
| | 6 | -.3570E+02 | -.1553E+01 | .3060E+03 | .1530E+03 | .00 |
| 5 | 5 | -.7978E+00 | -.1553E+01 | .1863E+03 | .1863E+03 | .00 |
| | 7 | -.7978E+00 | .1553E+01 | .5087E+02 | .5087E+02 | 87.48 |
| 6 | 6 | .7978E+00 | .1553E+01 | -.8634E+03 | -.7275E+03 | 87.48 |
| | 8 | .7978E+00 | -.1553E+01 | -.7275E+03 | -.8634E+03 | .00 |
| 7 | 7 | -.7978E+00 | -.1553E+01 | .5087E+02 | .5087E+02 | .00 |
| | 9 | -.7978E+00 | .1553E+01 | -.8500E+02 | -.8500E+02 | 87.48 |
| 8 | 8 | .7978E+00 | .1553E+01 | -.7275E+03 | -.5916E+03 | 87.48 |
| | 10 | .7978E+00 | -.1553E+01 | -.5916E+03 | -.7275E+03 | .00 |
| 9 | 9 | -.1672E+01 | .5040E+00 | -.8500E+02 | -.3581E+02 | 97.61 |
| | 11 | -.1672E+01 | -.5040E+00 | -.3581E+02 | -.8500E+02 | .00 |
| 10 | 17 | -.1384E+01 | .1065E+01 | .4875E+03 | .5916E+03 | 97.73 |
| | 10 | -.1384E+01 | -.1065E+01 | .5916E+03 | .4875E+03 | .00 |
| 11 | 11 | -.1672E+01 | .5040E+00 | -.3581E+02 | .1338E+02 | 97.61 |
| | 12 | -.1672E+01 | -.5040E+00 | .1338E+02 | -.3581E+02 | .00 |
| 12 | 16 | -.1383E+01 | .1065E+01 | .3835E+03 | .4875E+03 | 97.61 |
| | 17 | -.1383E+01 | -.1065E+01 | .4875E+03 | .3835E+03 | .00 |
| 13 | 12 | -.1672E+01 | .5032E+00 | .1338E+02 | .7269E+02 | 117.87 |
| | 13 | -.1672E+01 | -.5032E+00 | .7269E+02 | .1338E+02 | .00 |
| 14 | 15 | -.1383E+01 | .1066E+01 | .2579E+03 | .3835E+03 | 117.87 |
| | 16 | -.1383E+01 | -.1066E+01 | .3835E+03 | .2579E+03 | .00 |
| 15 | 13 | -.1672E+01 | .5035E+00 | .7269E+02 | .1321E+03 | 117.99 |
| | 14 | -.1672E+01 | -.5035E+00 | .1321E+03 | .7269E+02 | .00 |
| 16 | 14 | -.1383E+01 | .1066E+01 | .1321E+03 | .2579E+03 | 117.99 |
| | 15 | -.1383E+01 | -.1066E+01 | .2579E+03 | .1321E+03 | .00 |

STRUCTURE REACTIONS

| JOINT | FORCE X KIP | FORCE Y KIP | MOMENT IN-KIP |
|---|---|---|---|
| 1 | .1101E+02 | .7436E+02 | .0000E+00 |
| 2 | -.1553E+01 | .3570E+02 | .0000E+00 |
| TOTAL | .9460E+01 | .1101E+03 | |

NED FORM 223
27 Sept 49

NEW ENGLAND DIVISION
CORPS OF ENGINEERS, U.S. ARMY



SUBJECT RTS - Maint.
COMPUTATION Frame C frame
COMPUTED BY SAG CHECKED BY DATE

1 LOAD CASE I

JOINT DISPLACEMENTS

| JOINT | DX IN | DY IN | DR RAD |
|---|---|---|---|
| 1 | .0000E+00 | .0000E+00 | -.4087E-03 |
| 2 | .0000E+00 | .0000E+00 | -.9743E-03 |
| 3 | .4134E-01 | -.1440E-01 | -.4666E-03 |
| 4 | .8841E-01 | -.8256E-02 | -.5639E-03 |
| 5 | .8387E-01 | -.2373E-01 | -.5137E-03 |
| 6 | .1332E+00 | -.1360E-01 | -.2305E-03 |
| 7 | .1270E+00 | -.2341E-01 | -.3680E-03 |
| 8 | .1503E+00 | -.1391E-01 | -.1520E-03 |
| 9 | .1559E+00 | -.2316E-01 | -.3003E-03 |
| 10 | .1620E+00 | -.1416E-01 | -.1078E-03 |
| 11 | .1603E+00 | -.4761E-01 | -.2230E-03 |
| 12 | .1626E+00 | -.6075E-01 | -.7594E-04 |
| 13 | .1616E+00 | -.5622E-01 | .1109E-03 |
| 14 | .1584E+00 | -.3932E-01 | .1514E-03 |
| 15 | .1616E+00 | -.2064E-01 | .1446E-03 |
| 16 | .1636E+00 | -.7611E-02 | .4192E-04 |
| 17 | .1635E+00 | -.7048E-02 | -.5719E-04 |

SUBJECT

COMPUTATION

COMPUTED BY CHECKED BY DATE

MEMBER END FORCES

| MEMBER | JOINT | AXIAL KIP | SHEAR KIP | MOMENT IN-KIP | MOMENT EXTREMA IN-KIP | LOCATION IN |
|---|---|---|---|---|---|---|
| 1 | 1 | -.6996E+02 | -.1554E+01 | .0000E+00 | .0000E+00 | .00 |
| | 3 | -.6996E+02 | .1554E+01 | -.1531E+03 | -.1531E+03 | 98.52 |
| 2 | 2 | -.4010E+02 | .1101E+02 | .0000E+00 | .1085E+04 | 98.52 |
| | 4 | -.4010E+02 | -.1101E+02 | .1085E+04 | .0000E+00 | .00 |
| 3 | 3 | -.6996E+02 | -.1554E+01 | -.1531E+03 | -.1531E+03 | .00 |
| | 5 | -.6996E+02 | .1554E+01 | -.3061E+03 | -.3061E+03 | 98.52 |
| 4 | 4 | -.4010E+02 | .1101E+02 | .1085E+04 | .2170E+04 | 98.52 |
| | 6 | -.4010E+02 | -.1101E+02 | .2170E+04 | .1085E+04 | .00 |
| 5 | 5 | .3598E+01 | -.1554E+01 | .2051E+04 | .2051E+04 | .00 |
| | 7 | .3598E+01 | .1554E+01 | .1915E+04 | .1915E+04 | 87.48 |
| 6 | 6 | -.3598E+01 | .1554E+01 | .1001E+04 | .1137E+04 | 87.48 |
| | 8 | -.3598E+01 | -.1554E+01 | .1137E+04 | .1001E+04 | .00 |
| 7 | 7 | .3598E+01 | -.1554E+01 | .1915E+04 | .1915E+04 | .00 |
| | 9 | .3598E+01 | .1554E+01 | .1779E+04 | .1779E+04 | 87.48 |
| 8 | 8 | -.3598E+01 | .1554E+01 | .1137E+04 | .1273E+04 | 87.48 |
| | 10 | -.3598E+01 | -.1554E+01 | .1273E+04 | .1137E+04 | .00 |
| 9 | 9 | -.8777E+00 | -.3820E+01 | .1779E+04 | .1779E+04 | .00 |
| | 11 | -.8777E+00 | .3820E+01 | .1406E+04 | .1406E+04 | 97.61 |
| 10 | 17 | -.2178E+01 | -.3259E+01 | -.9541E+03 | -.9541E+03 | .00 |
| | 10 | -.2178E+01 | .3259E+01 | -.1273E+04 | -.1273E+04 | 97.73 |
| 11 | 11 | -.8777E+00 | -.3820E+01 | .1406E+04 | .1406E+04 | .00 |
| | 12 | -.8777E+00 | .3820E+01 | .1033E+04 | .1033E+04 | 97.61 |
| 12 | 16 | -.2178E+01 | -.3258E+01 | -.6361E+03 | -.6361E+03 | .00 |
| | 17 | -.2178E+01 | .3258E+01 | -.9541E+03 | -.9541E+03 | 97.61 |
| 13 | 12 | -.8758E+00 | -.3820E+01 | .1033E+04 | .1033E+04 | .00 |
| | 13 | -.8758E+00 | .3820E+01 | .5829E+03 | .5829E+03 | 117.87 |
| 14 | 15 | -.2180E+01 | -.3257E+01 | -.2521E+03 | -.2521E+03 | .00 |
| | 16 | -.2180E+01 | .3257E+01 | -.6361E+03 | -.6361E+03 | 117.87 |
| 15 | 13 | -.8765E+00 | -.3820E+01 | .5829E+03 | .5829E+03 | .00 |
| | 14 | -.8765E+00 | .3820E+01 | .1322E+03 | .1322E+03 | 117.99 |
| 16 | 14 | -.2179E+01 | -.3257E+01 | .1322E+03 | .1322E+03 | .00 |
| | 15 | -.2179E+01 | .3257E+01 | -.2521E+03 | -.2521E+03 | 117.99 |

STRUCTURE REACTIONS

| JOINT | FORCE X KIP | FORCE Y KIP | MOMENT IN-KIP |
|---|---|---|---|
| 1 | .1554E+01 | .6996E+02 | .0000E+00 |
| 2 | -.1101E+02 | .4010E+02 | .0000E+00 |
| TOTAL | -.9460E+01 | .1101E+03 | |

SUBJECT

COMPUTATION

COMPUTED BY CHECKED BY DATE

MEMBER END FORCES

| MEMBER | LOAD CASE | JOINT | AXIAL KIP | SHEAR KIP | MOMENT IN-KIP | MOMENT EXTREMA IN-KIP | LOCATION IN |
|---|---|---|---|---|---|---|---|
| 1 | 1 | 1 | -.6996E+02 | .2911E+01 | .0000E+00 | .2868E+03 | 98.52 |
| | | 3 | -.6996E+02 | -.2911E+01 | .2868E+03 | .0000E+00 | .00 |
| | 2 | 1 | -.7436E+02 | -.1101E+02 | .0000E+00 | .0000E+00 | .00 |
| | | 3 | -.7436E+02 | .1101E+02 | -.1085E+04 | -.1085E+04 | 98.52 |
| | 3 | 1 | -.6996E+02 | -.1554E+01 | .0000E+00 | .0000E+00 | .00 |
| | | 3 | -.6996E+02 | .1554E+01 | -.1531E+03 | -.1531E+03 | 98.52 |
| 2 | 1 | 2 | -.4010E+02 | .6549E+01 | .0000E+00 | .6452E+03 | 98.52 |
| | | 4 | -.4010E+02 | -.6549E+01 | .6452E+03 | .0000E+00 | .00 |
| | 2 | 2 | -.3570E+02 | .1553E+01 | .0000E+00 | .1530E+03 | 98.52 |
| | | 4 | -.3570E+02 | -.1553E+01 | .1530E+03 | .0000E+00 | .00 |
| | 3 | 2 | -.4010E+02 | .1101E+02 | .0000E+00 | .1085E+04 | 98.52 |
| | | 4 | -.4010E+02 | -.1101E+02 | .1085E+04 | .0000E+00 | .00 |
| 3 | 1 | 3 | -.6996E+02 | .2911E+01 | .2868E+03 | .5736E+03 | 98.52 |
| | | 5 | -.6996E+02 | -.2911E+01 | .5736E+03 | .2868E+03 | .00 |
| | 2 | 3 | -.7436E+02 | -.1101E+02 | -.1085E+04 | -.1085E+04 | .00 |
| | | 5 | -.7436E+02 | .1101E+02 | -.2170E+04 | -.2170E+04 | 98.52 |
| | 3 | 3 | -.6996E+02 | -.1554E+01 | -.1531E+03 | -.1531E+03 | .00 |
| | | 5 | -.6996E+02 | .1554E+01 | -.3061E+03 | -.3061E+03 | 98.52 |
| 4 | 1 | 4 | -.4010E+02 | .6549E+01 | .6452E+03 | .1290E+04 | 98.52 |
| | | 6 | -.4010E+02 | -.6549E+01 | .1290E+04 | .6452E+03 | .00 |
| | 2 | 4 | -.3570E+02 | .1553E+01 | .1530E+03 | .3060E+03 | 98.52 |
| | | 6 | -.3570E+02 | -.1553E+01 | .3060E+03 | .1530E+03 | .00 |
| | 3 | 4 | -.4010E+02 | .1101E+02 | .1085E+04 | .2170E+04 | 98.52 |
| | | 6 | -.4010E+02 | -.1101E+02 | .2170E+04 | .1085E+04 | .00 |
| 5 | 1 | 5 | .3598E+01 | -.6549E+01 | .2930E+04 | .2930E+04 | .00 |
| | | 7 | .3598E+01 | .6549E+01 | .2358E+04 | .2358E+04 | 87.48 |
| | 2 | 5 | -.7978E+00 | -.1553E+01 | .1868E+03 | .1868E+03 | .00 |
| | | 7 | -.7978E+00 | .1553E+01 | .5087E+02 | .5087E+02 | 87.48 |
| | 3 | 5 | .3598E+01 | -.1554E+01 | .2051E+04 | .2051E+04 | .00 |
| | | 7 | .3598E+01 | .1554E+01 | .1915E+04 | .1915E+04 | 87.48 |
| 6 | 1 | 6 | -.3598E+01 | .6549E+01 | .1210E+03 | .6939E+03 | 87.48 |
| | | 8 | -.3598E+01 | -.6549E+01 | .6939E+03 | .1210E+03 | .00 |
| | 2 | 6 | .7978E+00 | .1553E+01 | -.8634E+03 | -.7275E+03 | 87.48 |
| | | 8 | .7978E+00 | -.1553E+01 | -.7275E+03 | -.8634E+03 | .00 |
| | 3 | 6 | -.3598E+01 | .1554E+01 | .1001E+04 | .1137E+04 | 87.48 |
| | | 8 | -.3598E+01 | -.1554E+01 | .1137E+04 | .1001E+04 | .00 |
| 7 | 1 | 7 | .3598E+01 | -.6549E+01 | .2358E+04 | .2358E+04 | .00 |
| | | 9 | .3598E+01 | .6549E+01 | .1785E+04 | .1785E+04 | 87.48 |
| | 2 | 7 | -.7978E+00 | -.1553E+01 | .5087E+02 | .5087E+02 | .00 |
| | | 9 | -.7978E+00 | .1553E+01 | -.8500E+02 | -.8500E+02 | 87.48 |
| | 3 | 7 | .3598E+01 | -.1554E+01 | .1915E+04 | .1915E+04 | .00 |
| | | 9 | .3598E+01 | .1554E+01 | .1779E+04 | .1779E+04 | 87.48 |

NED FORM 223
27 Sept 49

NEW ENGLAND DIVISION
CORPS OF ENGINEERS, U.S. ARMY



SUBJECT

COMPUTATION

COMPUTED BY CHECKED BY DATE

| | | | | | | | |
|---|---|---|---|---|---|---|---|
| 8 | 1 | 8 | -.3598E+01 | .6549E+01 | .6939E+03 | .1267E+04 | 87.43 |
| | | 10 | -.3598E+01 | -.6549E+01 | .1267E+04 | .6939E+03 | .00 |
| | 2 | 8 | .7978E+00 | .1553E+01 | -.7275E+03 | -.5916E+03 | 87.43 |
| | | 10 | .7978E+00 | -.1553E+01 | -.5916E+03 | -.7275E+03 | .00 |
| | 3 | 8 | -.3598E+01 | .1554E+01 | .1137E+04 | .1273E+04 | 87.43 |
| | | 10 | -.3598E+01 | -.1554E+01 | .1273E+04 | .1137E+04 | .00 |
| 9 | 1 | 9 | -.5791E+01 | -.4722E+01 | .1785E+04 | .1785E+04 | .00 |
| | | 11 | -.5791E+01 | .4722E+01 | .1324E+04 | .1324E+04 | 97.61 |
| | 2 | 9 | -.1672E+01 | .5040E+00 | -.8500E+02 | -.3581E+02 | 97.61 |
| | | 11 | -.1672E+01 | -.5040E+00 | -.3581E+02 | -.8500E+02 | .00 |
| | 3 | 9 | -.8777E+00 | -.3820E+01 | .1779E+04 | .1779E+04 | .00 |
| | | 11 | -.8777E+00 | .3820E+01 | .1406E+04 | .1406E+04 | 97.61 |
| 10 | 1 | 17 | -.7091E+01 | -.2357E+01 | -.1036E+04 | -.1036E+04 | .00 |
| | | 10 | -.7091E+01 | .2357E+01 | -.1267E+04 | -.1267E+04 | 97.73 |
| | 2 | 17 | -.1384E+01 | .1065E+01 | .4875E+03 | .5916E+03 | 97.73 |
| | | 10 | -.1384E+01 | -.1065E+01 | .5916E+03 | .4875E+03 | .00 |
| | 3 | 17 | -.2178E+01 | -.3259E+01 | -.9541E+03 | -.9541E+03 | .00 |
| | | 10 | -.2178E+01 | .3259E+01 | -.1273E+04 | -.1273E+04 | 97.73 |
| 11 | 1 | 11 | -.5791E+01 | -.4722E+01 | .1324E+04 | .1324E+04 | .00 |
| | | 12 | -.5791E+01 | .4722E+01 | .8627E+03 | .8627E+03 | 97.61 |
| | 2 | 11 | -.1672E+01 | .5040E+00 | -.3581E+02 | .1338E+02 | 97.61 |
| | | 12 | -.1672E+01 | -.5040E+00 | .1338E+02 | -.3581E+02 | .00 |
| | 3 | 11 | -.8777E+00 | -.3820E+01 | .1406E+04 | .1406E+04 | .00 |
| | | 12 | -.8777E+00 | .3820E+01 | .1137E+04 | .1137E+04 | 97.61 |
| 12 | 1 | 16 | -.7091E+01 | -.2357E+01 | -.8065E+03 | -.8065E+03 | .00 |
| | | 17 | -.7091E+01 | .2357E+01 | -.1036E+04 | -.1036E+04 | 97.61 |
| | 2 | 16 | -.1383E+01 | .1065E+01 | .2835E+03 | .4875E+03 | 97.61 |
| | | 17 | -.1383E+01 | -.1065E+01 | .4875E+03 | .2835E+03 | .00 |
| | 3 | 16 | -.2178E+01 | -.3258E+01 | -.6361E+03 | -.6361E+03 | .00 |
| | | 17 | -.2178E+01 | .3258E+01 | -.9541E+03 | -.9541E+03 | 97.61 |

SUBJECT

COMPUTATION

COMPUTED BY CHECKED BY DATE

| | | | | | | | |
|---|---|---|---|---|---|---|---|
| 13 | 1 | 12 | -.5788E-01 | -.4725E+01 | .8627E+03 | .8627E+03 | .00 |
| | | 13 | -.5788E+01 | .4725E+01 | .3057E+03 | .3057E+03 | 117.87 |
| | 2 | 12 | -.1672E+01 | .5032E+00 | .1338E+02 | .7269E+02 | 117.87 |
| | | 13 | -.1672E+01 | -.5032E+00 | .7269E+02 | .1338E+02 | .00 |
| | 3 | 12 | -.8758E+00 | -.3820E+01 | .1033E+04 | .1033E+04 | .00 |
| | | 13 | -.8758E+00 | .3820E+01 | .5829E+03 | .5829E+03 | 117.87 |
| 14 | 1 | 15 | -.7092E+01 | -.2352E+01 | -.5293E+03 | -.5293E+03 | .00 |
| | | 16 | -.7092E+01 | .2352E+01 | -.3065E+03 | -.3065E+03 | 117.87 |
| | 2 | 15 | -.1383E+01 | .1066E+01 | .2579E+03 | .3835E+03 | 117.87 |
| | | 16 | -.1383E+01 | -.1066E+01 | .3835E+03 | .2579E+03 | .00 |
| | 3 | 15 | -.2180E+01 | -.3257E+01 | -.2521E+03 | -.2521E+03 | .00 |
| | | 16 | -.2180E+01 | .3257E+01 | -.6361E+03 | -.6361E+03 | 117.87 |
| 15 | 1 | 13 | -.5789E+01 | -.4724E+01 | .3057E+03 | .3057E+03 | .00 |
| | | 14 | -.5789E+01 | .4724E+01 | -.2517E+03 | -.2517E+03 | 117.99 |
| | 2 | 13 | -.1672E+01 | .5035E+00 | .7269E+02 | .1321E+03 | 117.99 |
| | | 14 | -.1672E+01 | -.5035E+00 | .1321E+03 | .7269E+02 | .00 |
| | 3 | 13 | -.8765E+00 | -.3820E+01 | .5829E+03 | .5829E+03 | .00 |
| | | 14 | -.8765E+00 | .3820E+01 | .1322E+03 | .1322E+03 | 117.99 |
| 16 | 1 | 14 | -.7092E+01 | -.2353E+01 | -.2517E+03 | -.2517E+03 | .00 |
| | | 15 | -.7092E+01 | .2353E+01 | -.5293E+03 | -.5293E+03 | 117.99 |
| | 2 | 14 | -.1383E+01 | .1066E+01 | .1321E+03 | .2579E+03 | 117.99 |
| | | 15 | -.1383E+01 | -.1066E+01 | .2579E+03 | .1321E+03 | .00 |
| | 3 | 14 | -.2179E+01 | -.3257E+01 | .1322E+03 | .1322E+03 | .00 |
| | | 15 | -.2179E+01 | .3257E+01 | -.2521E+03 | -.2521E+03 | 117.99 |

# Appendix B

NED FORM 223
27 Sept 49

NEW ENGLAND DIVISION
CORPS OF ENGINEERS, U.S. ARMY



SUBJECT RTS - MAINT

COMPUTATION

COMPUTED BY SAG CHECKED BY DATE

1 *** JOINT DATA ***

| JOINT | X --- FT --- | Y | RX | RY | RZ | KX ---KIP / IN--- | KY | KZ IN-KIP/RAD |
|---|---|---|---|---|---|---|---|---|
| 1 | .00 | .00 | * | * | | | | |
| 2 | 2.10 | .00 | | | | | | |
| 3 | 8.25 | .00 | | | | | | |
| 4 | 14.50 | .00 | | | | | | |
| 5 | 22.08 | .00 | * | * | | | | |

1 *** MEMBER DATA ***

| MEMBER | END A | END B | LENGTH FT | I IN**4 | A IN**2 | AS IN**2 | E KSI | G KSI |
|---|---|---|---|---|---|---|---|---|
| 1 | 1 | 2 | 2.00 | .5170E+04 | .4770E+02 | .4770E+02 | .2900E+05 | .1115E+0 |
| 2 | 2 | 3 | 6.25 | .5170E+04 | .4770E+02 | .4770E+02 | .2900E+05 | .1115E+0 |
| 3 | 3 | 4 | 6.25 | .5170E+04 | .4770E+02 | .4770E+02 | .2900E+05 | .1115E+0 |
| 4 | 4 | 5 | 7.58 | .5170E+04 | .4770E+02 | .4770E+02 | .2900E+05 | .1115E+0 |

1 *** LOAD CASE 1 LOAD

| JOINT | FORCE X KIP | FORCE Y KIP | MOMENT FT-KIP |
|---|---|---|---|
| 2 | .0000E+00 | -.6412E+02 | .0000E+00 |
| 4 | .0000E+00 | -.6412E+02 | .0000E+00 |

1 LOAD CASE 1 LOAD

JOINT DISPLACEMENTS

| JOINT | DX IN | DY IN | DR RAD |
|---|---|---|---|
| 1 | .0000E+00 | .0000E+00 | -.2302E-02 |
| 2 | .0000E+00 | -.5765E-01 | -.2143E-02 |
| 3 | .0000E+00 | -.1773E-00 | -.3799E-03 |
| 4 | .0000E+00 | -.1790E+00 | .9964E-03 |
| 5 | .0000E+00 | .0000E+00 | .2313E-02 |

OK

NED FORM 223
27 Sept 49

NEW ENGLAND DIVISION
CORPS OF ENGINEERS, U.S. ARMY



SUBJECT RTS - Maint

COMPUTATION

COMPUTED BY SAG CHECKED BY DATE

MEMBER END FORCES

| MEMBER | JOINT | AXIAL KIP | SHEAR KIP | MOMENT IN-KIP | MOMENT EXTREMA IN-KIP | LOCATION IN |
|---|---|---|---|---|---|---|
| 1 | 1 | .0000E+00 | .8032E+02 | .0000E+00 | .1928E+04 | 24.00 |
| | 2 | .0000E+00 | -.8032E+02 | .1928E+04 | .0000E+00 | .00 |
| 2 | 2 | .0000E+00 | .1620E+02 | .1928E+04 | .3143E+04 | 75.00 |
| | 3 | .0000E+00 | -.1620E+02 | .3143E+04 | .1928E+04 | .00 |
| 3 | 3 | .0000E+00 | .1620E+02 | .3143E+04 | .4358E+04 | 75.00 |
| | 4 | .0000E+00 | -.1620E+02 | .4358E+04 | .3143E+04 | .00 |
| 4 | 4 | .0000E+00 | -.4792E+02 | .4358E+04 | .4358E+04 | .00 |
| | 5 | .0000E+00 | .4792E+02 | .0000E+00 | .0000E+00 | 90.96 |

STRUCTURE REACTIONS

| JOINT | FORCE X KIP | FORCE Y KIP | MOMENT IN-KIP |
|---|---|---|---|
| 1 | .0000E+00 | .8032E+02 | .0000E+00 |
| 5 | .0000E+00 | .4792E+02 | .0000E+00 |
| TOTAL | .0000E+00 | .1282E+03 | |

MEMBER END FORCES

| MEMBER | LOAD CASE | JOINT | AXIAL KIP | SHEAR KIP | MOMENT IN-KIP | MOMENT EXTREMA IN-KIP | LOCATION IN |
|---|---|---|---|---|---|---|---|
| 1 | 1 | 1 | .0000E+00 | .8032E+02 | .0000E+00 | .1928E+04 | 24.00 |
| | | 2 | .0000E+00 | -.8032E+02 | .1928E+04 | .0000E+00 | .00 |
| 2 | 1 | 2 | .0000E+00 | .1620E+02 | .1928E+04 | .3143E+04 | 75.00 |
| | | 3 | .0000E+00 | -.1620E+02 | .3143E+04 | .1928E+04 | .00 |
| 3 | 1 | 3 | .0000E+00 | .1620E+02 | .3143E+04 | .4358E+04 | 75.00 |
| | | 4 | .0000E+00 | -.1620E+02 | .4358E+04 | .3143E+04 | .00 |
| 4 | 1 | 4 | .0000E+00 | -.4792E+02 | .4358E+04 | .4358E+04 | .00 |
| | | 5 | .0000E+00 | .4792E+02 | .0000E+00 | .0000E+00 | 90.96 |

363.13 FT-K ok

NED FORM 223
27 Sept 49

NEW ENGLAND DIVISION
CORPS OF ENGINEERS, U.S. ARMY



SUBJECT RTS - Maint

COMPUTATION

COMPUTED BY SAG CHECKED BY DATE

*** JOINT DATA ***

| JOINT | X FT | Y FT | Z FT | RX RAD | RY RAD | RZ RAD |
|---|---|---|---|---|---|---|
| 1 | [illegible] | [illegible] | [illegible] | [illegible] | [illegible] | [illegible] |
| 2 | [illegible] | [illegible] | [illegible] | [illegible] | [illegible] | [illegible] |
| 3 | [illegible] | [illegible] | [illegible] | [illegible] | [illegible] | [illegible] |
| 4 | [illegible] | [illegible] | [illegible] | [illegible] | [illegible] | [illegible] |
| 5 | [illegible] | [illegible] | [illegible] | [illegible] | [illegible] | [illegible] |

*** MEMBER DATA ***

| MEMBER | END A | END B | LENGTH FT | I IN**4 | A IN**2 | AS IN**2 | E KSI | G KSI |
|---|---|---|---|---|---|---|---|---|
| 1 | 1 | 2 | 2.00 | .4430E-03 | .4770E+02 | .4770E+02 | .2900E+05 | .1115E+ |
| 2 | 2 | 3 | 5.25 | .4430E+03 | .4770E-02 | .4770E+02 | .2900E+05 | .1115E- |
| 3 | 3 | 1 | 5.25 | .4430E-02 | .4770E-02 | .4770E+02 | .2900E+05 | .1115E+ |
| 4 | 4 | 5 | 7.53 | .4430E-02 | .4770E+02 | .4770E+02 | .2900E+05 | .1115E- |

*** LOAD CASE 1 LOAD

| JOINT | FORCE X KIP | FORCE Y KIP | MOMENT FT-KIP |
|---|---|---|---|
| 2 | .0000E+00 | -.5000E+01 | .0000E+00 |
| 3 | .0000E+00 | -.5000E+01 | .0000E+00 |

LOAD CASE 1 LOAD

JOINT DISPLACEMENTS

| JOINT | DX IN | DY IN | DR RAD |
|---|---|---|---|
| 1 | .0000E+00 | .0000E+00 | -.2736E-02 |
| 2 | .0000E+00 | -.4527E-01 | -.2581E-02 |
| 3 | .0000E+00 | -.2065E+00 | -.1057E-02 |
| 4 | .0000E+00 | -.2060E+00 | .1197E-02 |
| 5 | .0000E+00 | .0000E+00 | .2785E-02 |

OK

NED FORM 223
27 Sept 49

NEW ENGLAND DIVISION
CORPS OF ENGINEERS, U.S. ARMY



SUBJECT RTS - Maint
COMPUTATION
COMPUTED BY SAG CHECKED BY DATE

MEMBER END FORCES

| MEMBER | JOINT | AXIAL KIP | SHEAR KIP | MOMENT IN-KIP | MOMENT EXTREMA IN-KIP | LOCATION IN |
|---|---|---|---|---|---|---|
| 1 | 1 | .0000E+00 | .8268E+01 | .0000E+00 | .1984E+03 | 24.00 |
| | 2 | .0000E+00 | -.8268E+01 | .1984E+03 | .0000E+00 | .00 |
| 2 | 2 | .0000E+00 | .1668E+01 | .1984E+03 | .3235E+03 | 75.00 |
| | 3 | .0000E+00 | -.1668E+01 | .3235E+03 | .1984E+03 | .00 |
| 3 | 3 | .0000E+00 | .1668E+01 | .3235E+03 | .4486E+03 | 75.00 |
| | 4 | .0000E+00 | -.1668E+01 | .4486E+03 | .3235E+03 | .00 |
| 4 | 4 | .0000E+00 | -.4932E+01 | .4486E+03 | .4486E+03 | .00 |
| | 5 | .0000E+00 | .4932E+01 | .0000E+00 | .0000E+00 | 90.96 |

STRUCTURE REACTIONS

| JOINT | FORCE X KIP | FORCE Y KIP | MOMENT IN-KIP |
|---|---|---|---|
| 1 | .0000E+00 | .8268E+01 | .0000E+00 |
| 5 | .0000E+00 | .4932E+01 | .0000E+00 |
| TOTAL | .0000E+00 | .1320E+02 | |

MEMBER END FORCES

| MEMBER | LOAD CASE | JOINT | AXIAL KIP | SHEAR KIP | MOMENT IN-KIP | MOMENT EXTREMA IN-KIP | LOCATION IN |
|---|---|---|---|---|---|---|---|
| 1 | 1 | 1 | .0000E+00 | .8268E+01 | .0000E+00 | .1984E+03 | 24.00 |
| | | 2 | .0000E+00 | -.8268E+01 | .1984E+03 | .0000E+00 | .00 |
| 2 | 1 | 2 | .0000E+00 | .1668E+01 | .1984E+03 | .3235E+03 | 75.00 |
| | | 3 | .0000E+00 | -.1668E+01 | .3235E+03 | .1984E+03 | .00 |
| 3 | 1 | 3 | .0000E+00 | .1668E+01 | .3235E+03 | .4486E+03 | 75.00 |
| | | 4 | .0000E+00 | -.1668E+01 | .4486E+03 | .3235E+03 | .00 |
| 4 | 1 | 4 | .0000E+00 | -.4932E+01 | .4486E+03 | .4486E+03 | .00 |
| | | 5 | .0000E+00 | .4932E+01 | .0000E+00 | .0000E+00 | 90.96 |

37.4 FT-K OK

NED FORM 223
27 Sept 49

NEW ENGLAND DIVISION
CORPS OF ENGINEERS, U.S. ARMY

PAGE

SUBJECT RTS- Maint.
COMPUTATION RTS- Maintenance
COMPUTED BY SAG CHECKED BY DATE 10-30-89

Exterior wall with CMU Wainscott

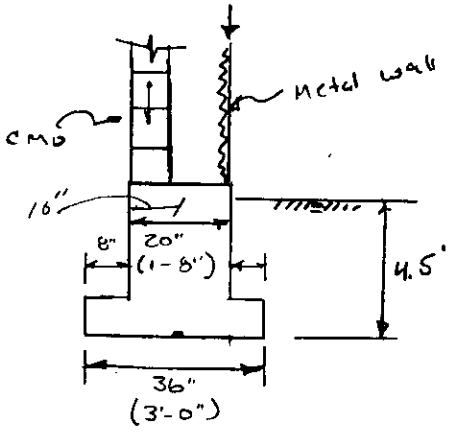


WCM & Channel = 65psf (8) + 6.5 = 5265 lb/ft
Wwall = (1.35+ 1.0 +.4)(37') = 101.7 lb/ft
628.2 lb/ft

Effective Weight of Soil

(3)(1)(4.5)(125/1000) = 1.69 k/ft

Wt of Concrete in excess of Displaced Soil

$$\frac{[(1)(3)(1)+(1.67)(1.6)(5)](150-125)}{1000} = .28 \text{ k/ft}$$

Soil

$\gamma_m = 125$ pcf , $N_q = 18.4$
$\phi = 30°$
$c = 0$ $N_\gamma = 15.67$

$\Sigma V = .628 + 1.69 + .28$
$= 2.56$ k

$$e_b = \Sigma M / \Sigma V = \frac{.5265(.5) + (.1017)(.83)}{2.56k} = .136$$

$B' = 3 - 2(.136) = 2.728'$

$q_a = 2.56/(1)(2.728) = .94$ k/ft² /ft

$q_u = [125(4.5)(18.4) + .4(125)(2.728)(15.67)]/1000 = 12.48$ k/ft²/ft
$FS = 12.48/.94 = 13.28$ OK

NED FORM 223
27 Sept 49

NEW ENGLAND DIVISION
CORPS OF ENGINEERS, U.S. ARMY

PAGE

SUBJECT RTS- Maintenance
COMPUTATION Thickened Slab
COMPUTED BY SAG CHECKED BY DATE 10-31-89

Design per TM5-809-12

Operable wall Panel Weight = 12 psf

FS = 3.0 ∴ weight = 36 psf

h = 15'

W = 36psf (15) = 540 lb/lf

K = 100

Flexural Strength = 600 lb/in²

for 6" Slab Allowable = 755 lb/lin ft > 540 lb/lin ft

No increase Needed, add 5" to bottom of cut.

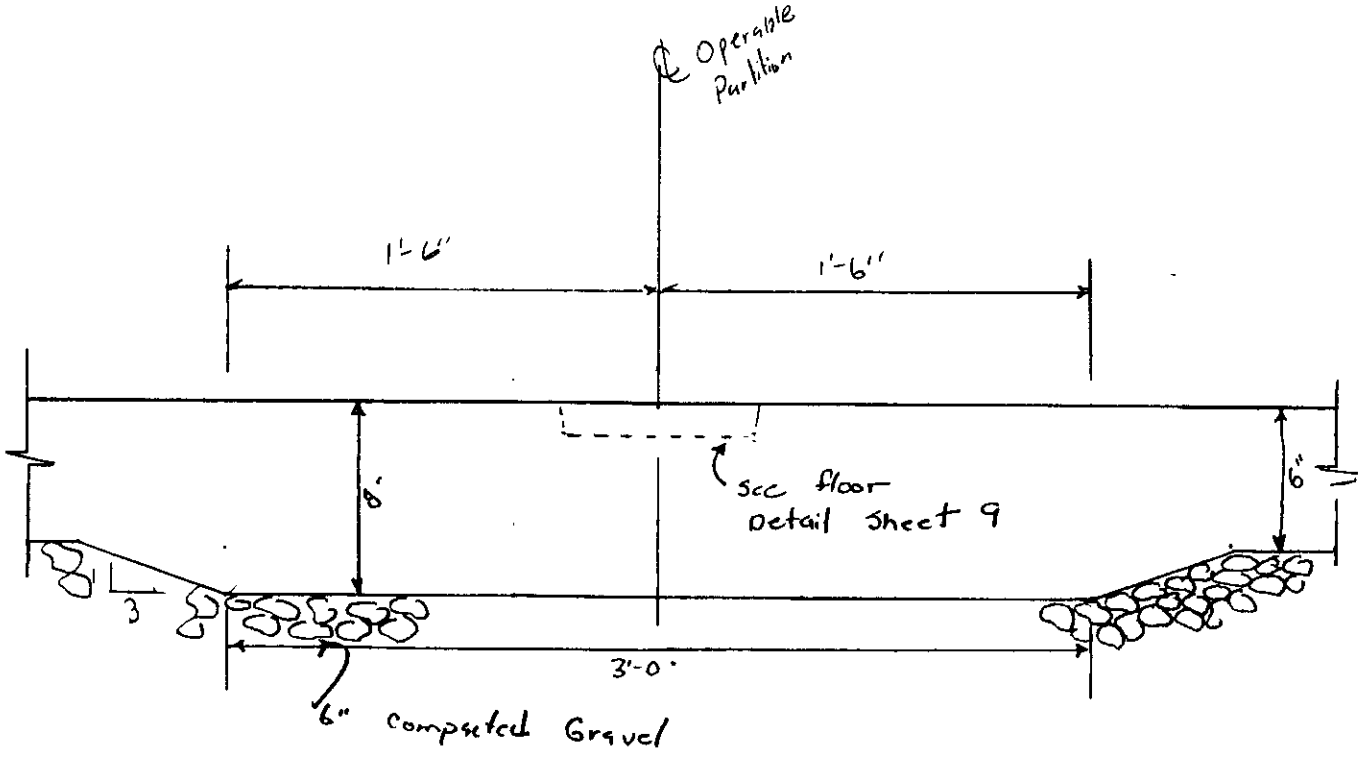

NED FORM 223
27 Sept 49

NEW ENGLAND DIVISION
CORPS OF ENGINEERS, U.S. ARMY

PAGE _____

SUBJECT _____
COMPUTATION _____
COMPUTED BY _____ CHECKED BY _____ DATE _____

Recheck 4'x4' End Wall Footing (See page 40)

Dead Load

$17.66(37')(3.8) + 53(37) + (65(8)+6.5)(17.66) + [3(1)+1.67(4)]13.66/150$

$2483 + 1431 + 9298 + 19,834 = 33,046$ lb

$= \underline{\underline{33.05 \text{ K}}}$

Seismic Load by CMU

$(11.42 \text{ psf})(8)(17.66) = 1613$ lbs $< 2200$ lbs

$\Sigma V = 33.05 + 9.0 + .75 = 42.8$

$e_b = \frac{5.42(5)}{42.8} = .633'$ , $e_y = \frac{2.2(5)}{42.8} = .257'$

$B' = 4 - 2(.633) = 2.73'$ $Y' = 4 - 2(.257) = 3.49'$

$H = 5.85$ K

$\alpha = \text{ARCTAN}\left(\frac{5.85}{42.8}\right) = 7.78°$

$q_a = \frac{42.8}{2.73}(3.49) = 4.49$ KSF

$q_u = \frac{125(4.5)(18.4)(1 - 7.78/90)^2 + 0.4(125)(2.73)(15.67)(1 - 7.78/30)^2}{1000}$

$q_u = 9.811$ KSF

$FS = 9.811 \text{ KSF} / 4.49 \text{ KSF} = 2.18$ KSF $> 2.0$ ok

NED FORM 223
27 Sept 49

NEW ENGLAND DIVISION
CORPS OF ENGINEERS, U.S. ARMY

SUBJECT: RTS - Maintenance
COMPUTATION: Concrete Wall
COMPUTED BY: CAG
CHECKED BY:
DATE:
PAGE 1

# Elevation of Concrete Wall

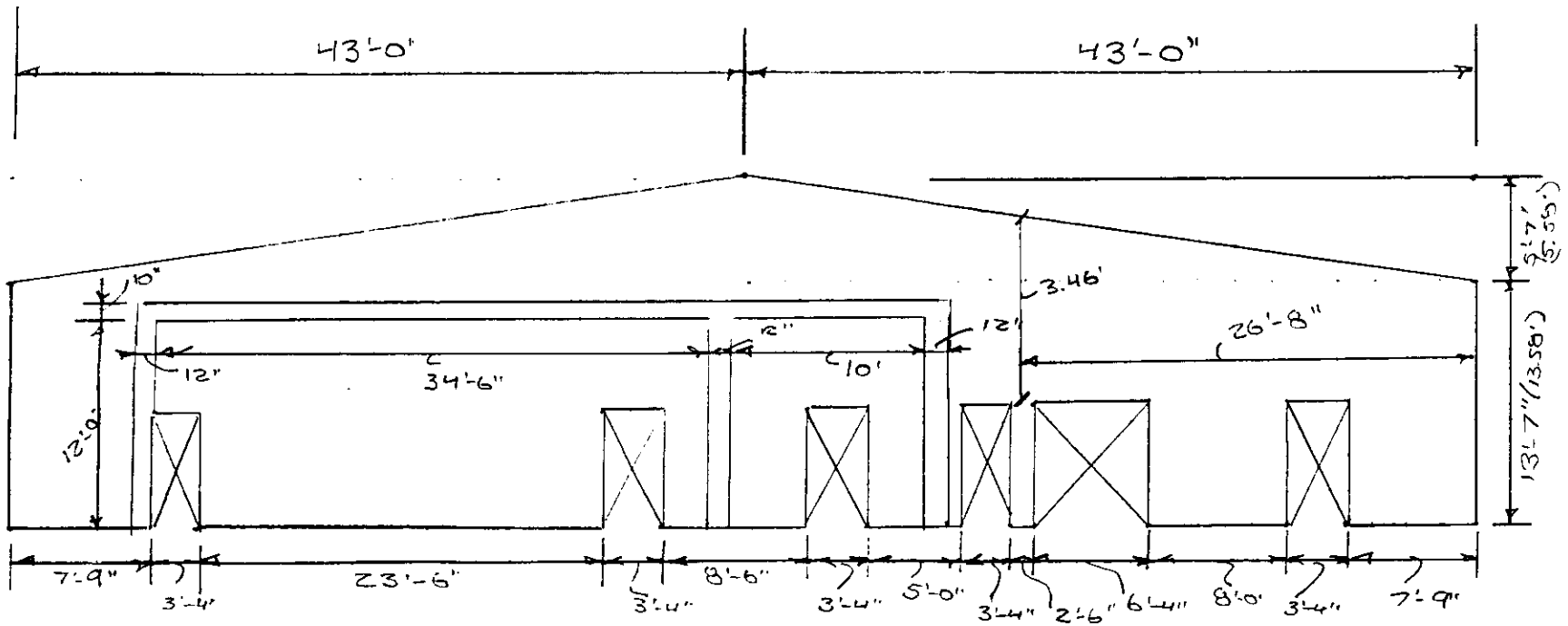

SUBJECT

COMPUTATION

COMPUTED BY CHECKED BY DATE

## Wind.

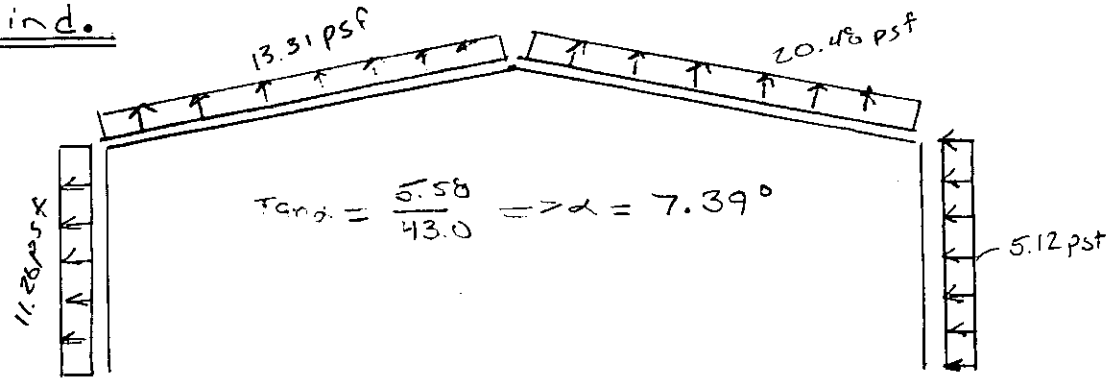


$\tan\alpha = \frac{5.58}{43.0} \Rightarrow \alpha = 7.39°$

Horizontal Reaction width = 23.33/2 = 11.66'

$\Sigma H = 11.26(11.66)(13.58) + 5.12(11.66)(13.58) + 13.31(43.4)(11.66)\sin 7.39$
$- 20.46(43.4)(11.66)\sin 7.39$

$= 1783 + 811 + 866 - 1333 = \underline{2127 \text{ lb.}}$

$\Sigma V = 13.31(43.4)(11.66)\cos 7.39 + 20.46(43.4)(11.66)(\cos 7.39)$
$= 6679 + 10268 = \underline{16{,}947 \text{ lb.}}$

## Seismic

### DEAD LOAD Weight

$W_{conc\ Wall} = 86'(1')(13.58)(150\ lb/ft^3) + 5.58(43)(1')(150) - [(3.33)(5) + 6.33]7(1)$
$= 175K + 36K - 24K = \underline{187K}$

$W_{concFtung} = 21.83/2\,(44.5)\,10/12\,(150) + 12(21.83/2)(1)(3)\,150$
$+ 5.5\ psf\,(21.83/2)(44.5)$
$= 60.71K + 58.94K + 2.67 = \underline{122K}$

Roof DL $= (1.42 + 2.42 + 1.0 + 8.5)\,86.8(11.66) + 300 = \underline{14K}$

Side Wall DL $= (1.85 + .4 + 8 + 1.35)(11.66)(13.58) = \underline{1.84K}$

25% LL $= .25(1119\ lb/ft)(86.8) = 24.3K$
$.25(21.83/2)(44.5)20\ lb/ft^2 = 2.6K$
$\underline{26.9K}$

$W_t = 187 + 122 + 14 + 1.84 + 26.9 = 351.7K$

SUBJECT

COMPUTATION

COMPUTED BY CHECKED BY DATE

$V = ZIKCSW$

$CS = .14$
$K = 1.0$
$I = 1.5$
$Z = 3/8$

$V = .375(1.5)(1)(.14)(351.7) = \underline{\underline{27.70\ K}}$ @ Foundation

## Shear Wall

| Check 2.5' X 1.0' Pier as critical |
|---|

$M_{max} = V(h)$ $h = 7'-0"$

## Force to Pier

$\frac{2.5}{63.02} \times 27.70 = \underline{\underline{1.1\ K}}$ $86' - [5(3.33) + 6.33] = 63.02$

## Shear

allowable shear, conc $= 1.1\sqrt{f'c} = \frac{60\ psi(12)(30)}{1000} = 21.6K > 1.1K$ ok

## Flexure

$M_{max} = 1.1(7.0) = 7.7$ FT-K

beam →

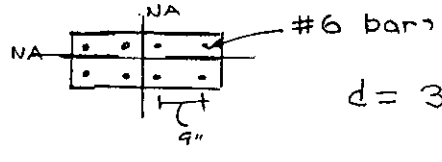


$d = 30" - 2" - .5(.75) = 27.625"$

$A_{s\,req} = \frac{7700 \times 12}{24{,}000 \times .886 \times 27.625} = .157\ IN^2 < .88$ ok

## Axial

$DL = (3.46')(1')(7.33)(150) = 3.8$ Kips
$(1.42 + 2.42 + 1.0 + 8.5)(11.66)(7.33) = 1.14$ Kips
$LL = 1.119\ K/ft\ (7.33) = 8.2$ Kips
$WT = 3.8 + 1.14 + 8.2 = 13.14$ Kips

allow bearing $= .6(3)(12)(30) = 648$ Kips ok.

SUBJECT

COMPUTATION

COMPUTED BY CHECKED BY DATE

Check 2.5 x 1.0 col. in the weak axis

from WL Check as a cantilever

20psf (7.33)(3.46') = .507 K, Shear ok

Max = .507(7) = 3.55 FT-K

d = 12 - 2 - .5(.75) = 9.625'

$A_{s req} = \frac{3550(12)}{24{,}000 \times .886 \times 9.625} = .208 \text{ IN}^2 < 1.76 \text{ IN}^2$ ok

from Seismic

$W_{LL}$ = 389 lb/ft (7.33) = 2.85 K

$W_{DL}$ = 7.33(3.46)(1)(150) = 3.8 K
(13.34psf)(23.33')(7.33') = 1.14 K
7.76 K

V = .375(1.5)(1)(.14)(7.76) = .611 K

Shear — .611 K < 21.5 K ok

M = .611 (7) = 4.28 FT-K

$A_{s req} = \frac{4280(12)}{24{,}000 \times .886 \times 9.625} = .25 \text{ IN}^2 < 1.76$ ok

NED FORM 223
27 Sept 49

NEW ENGLAND DIVISION
CORPS OF ENGINEERS, U.S. ARMY

PAGE _____

SUBJECT _____

COMPUTATION _____

COMPUTED BY _____ CHECKED BY _____ DATE _____

Check 6'-4" Beam opening

LL – 1119 lb/ft – Bldg

DL – 462 lb/ft – Bldg

Wall DL = 150 lb/ft³ (9.47) = 1420 lb/ft

$$M_{max} = \frac{wl^2}{8} = \frac{3\,k/ft\,(6.33)^2}{8} = 15.0\ ft\text{-}k$$

Beam = 9.47 ft

$$d = 9.47 - 2/12 + 1/2/12 = 9.26'$$

$$A_s = \frac{15000 \times 12}{24{,}000 \times .886 \times 9.26 \times 12} = .076\ in^2 < .2\ in^2$$