Design Analysis

Appendix A - Mechanical Design Computations

Conversion of U.S. Army Reserve Buildings 642 & 644 Fort Devens, Massachusetts

Final Design Submittal

US Army Corps
of Engineers
New England Division

December 1994

TABLE OF CONTENTS

DESCRIPTION	PAGE NO.
DESIGN WEATHER PARAMETERS	PAGE 1
U-VALUES	PAGE 2
BUILDING 642, FIRST FLOOR SPACE DESCRIPTIONS	PAGE 9
BUILDING 642, SECOND FLOOR SPACE DESCRIPTIONS	PAGE 48
BUILDING 642, THIRD FLOOR SPACE DESCRIPTIONS	PAGE 78
BUILDING 642, AIR SYSTEM INPUT SUMMARY	PAGE 109
BUILDING 642, AIR SYSTEM SIZING SUMMARY	PAGE 130
BUILDING 644, FIRST FLOOR SPACE DESCRIPTIONS	PAGE 162
BUILDING 644, SECOND FLOOR SPACE DESCRIPTIONS	PAGE 196
BUILDING 644, THIRD FLOOR SPACE DESCRIPTIONS	PAGE 227
BUILDING 644, AIR SYSTEM INPUT SUMMARY	PAGE 255
BUILDING 644, AIR SYSTEM SIZING SUMMARY	PAGE 284
BUILDING 642, VALVE COEFFICIENT CALCULATIONS	PAGE 313
BUILDING 644, VALVE COEFFICIENT CALCULATIONS	PAGE 328
BUILDING 642, AIR HANDLING UNIT SELECTIONS	PAGE 340
BUILDING 644, AIR HANDLING UNIT SELECTIONS	PAGE 349
BOILER BREECHING SIZING CALCULATIONS	PAGE 356
LCCA SUPPLEMENTAL INFORMATION	PAGE 360

DESIGN WEATHER PARAMETERS & MSHGs

Location: Fort Devens, Massachusetts

12-09-94

HAP v3.04

****

DESIGN PARAMETERS

City Name.....:	Fort Devens
Location.....:	Massachusetts
Latitude.....:	42.6 degrees
Longitude.....:	71.6 degrees
Elevation.....:	268.0 ft
Summer Design Dry-Bulb.....:	89.0 F
Summer Coincident Wet-Bulb.....:	72.0 F
Summer Daily Range.....:	24.0 F
Winter Design Dry-bulb.....:	1.0 F
Atmospheric Clearness Number.....:	1.00
Average Ground Reflectance.....:	0.20
Soil Conductivity.....:	0.800 BTU/hr/ft/F
Local Time Zone (GMT +/- N hours).:	5.0 hours
Consider Daylight Savings Time....?	N
First Month for Daylight Savings..:	-
Last Month for Daylight Savings...:	-
Simulation Weather Data.....:	Boston (TMY)
Current data is.....:	User Defined

DESIGN DAY MAXIMUM SOLAR HEAT GAINS (BTU/HR/SQFT)

Month	N	NNE	NE	ENE	E	ESE	SE	SSE	S
January	18.0	18.0	18.0	74.9	136.5	199.8	231.0	249.6	251.2
February	22.6	22.6	46.1	119.5	185.7	224.3	248.5	248.8	242.9
March	27.7	27.7	96.4	163.4	210.7	239.4	237.8	223.4	212.9
April	32.9	70.3	132.7	190.8	221.8	224.3	205.8	178.0	164.6
May	36.5	101.3	161.8	200.7	220.9	207.7	179.8	141.6	125.0
June	46.3	113.2	169.1	203.4	217.2	198.6	166.6	125.0	107.5
July	37.4	102.1	156.8	199.6	216.1	204.2	174.4	138.3	120.6
August	34.7	69.3	129.5	185.1	212.7	217.5	197.7	172.7	159.0
September	29.0	29.0	86.1	155.1	197.9	227.5	226.0	214.3	207.3
October	23.6	23.6	44.8	114.9	174.6	220.3	238.1	239.1	237.7
November	18.5	18.5	18.5	68.4	141.0	190.8	231.2	246.2	249.3
December	16.1	16.1	16.1	55.7	116.5	183.0	219.6	243.6	248.7

Month	SSW	SW	WSW	W	WNW	NW	NNW	HOR	Mult.
January	248.9	231.8	200.0	138.6	74.3	18.0	18.0	115.8	1.00
February	248.9	248.6	223.9	185.8	119.0	46.6	22.6	164.7	1.00
March	223.7	238.9	238.1	213.7	158.5	97.7	27.7	210.6	1.00
April	179.8	207.5	226.1	220.0	189.8	138.5	62.5	243.4	1.00
May	143.4	179.9	210.7	216.9	204.2	161.9	99.2	259.5	1.00
June	126.9	166.2	201.6	214.8	206.6	167.7	112.9	262.6	1.00
July	139.5	174.7	205.8	213.7	200.8	158.2	100.9	256.0	1.00
August	173.8	200.2	218.2	212.1	183.3	134.4	62.8	238.9	1.00
September	214.9	228.2	224.6	202.5	153.7	85.8	29.0	204.7	1.00
October	239.0	237.9	220.4	174.3	115.1	44.5	23.6	164.1	1.00
November	245.8	231.3	191.1	141.4	65.4	18.5	18.5	117.4	1.00
December	242.9	223.9	178.3	124.7	46.5	16.1	16.1	96.5	1.00

U-VALUES

WALL TYPE 3: (CUSTOM WALL)

Description.....: BLDG 642, FT DEVENS
Absorptivity.....: 0.900

Layer Description	Thickness	Density	Spec.Ht	R-Val	Weight
Inside surface resistance	-	-	-	0.69	-
4-in (102 mm) HW concrete block	4.00	61.0	0.20	0.71	20.3
Airspace	2.00	0.0	0.00	0.91	0.0
4-in (102 mm) HW concrete block	4.00	61.0	0.20	0.71	20.3
Outside surface resistance	-	-	-	0.33	-
Totals	10.00			3.35	40.7

Thickness: in Density: lb/cuft Weight: lb/sqft
R-value : (hr-sqft-F)/BTU Specific Heat: BTU/lb/F

ROOF TYPE 2: (CUSTOM ROOF)

Description.....: BLDG 642, FORT DEVENS
Absorptivity.....: 0.900

Layer Description	Thickness	Density	Spec.Ht	R-Val	Weight
Inside surface resistance	-	-	-	0.69	-
7-in HW concrete	7.00	140.0	0.20	0.58	81.7
R-7 (RSI-1.2) board insulation	1.00	2.0	0.22	6.94	0.2
EPDM Roofing	0.10	70.0	0.35	0.09	0.6
Outside surface resistance	-	-	-	0.33	-
Totals	8.10			8.63	82.4

Thickness: in Density: lb/cuft Weight: lb/sqft
R-value : (hr-sqft-F)/BTU Specific Heat: BTU/lb/F

****

WINDOW TYPE 1: (PRE-DEFINED WINDOW)

Glass Group.....: DOUBLE PANE, CLEAR
Glass Type.....: 1/8" clear + 1/8" clear
Window Description.....: W-1, BLDG 642, FT DEVENS
Height.....: 8.09 ft
Width.....: 3.42 ft
Frame Type.....: Aluminum with thermal breaks
Interior Shade Type....: No Shades Used
Overall U-value.....: 0.584 BTU/hr/sqft/F
Overall Shade Coeff....: 0.847

Predefined Glass Data

Glass Transmissivity	Glass Reflectivity	Glass Absorptivity	Glass U-Value	Shade Coefficient
0.712	0.134	0.154	0.490	0.890

WINDOW TYPE 2: (PRE-DEFINED WINDOW)

Glass Group.....: DOUBLE PANE, CLEAR
Glass Type.....: 1/8" clear + 1/8" clear
Window Description.....: W-2, BLDG 642, FT DEVENS
Height.....: 5.42 ft
Width.....: 3.42 ft
Frame Type.....: Aluminum with thermal breaks
Interior Shade Type....: No Shades Used
Overall U-value.....: 0.586 BTU/hr/sqft/F
Overall Shade Coeff....: 0.847

Predefined Glass Data

Glass Transmissivity	Glass Reflectivity	Glass Absorptivity	Glass U-Value	Shade Coefficient
0.712	0.134	0.154	0.490	0.890

WINDOW TYPE 3: (PRE-DEFINED WINDOW)

Glass Group.....: DOUBLE PANE, CLEAR
Glass Type.....: 1/8" clear + 1/8" clear
Window Description.....: W-3, BLDG 642, FT DEVENS
Height.....: 2.75 ft
Width.....: 3.42 ft
Frame Type.....: Aluminum with thermal breaks
Interior Shade Type....: No Shades Used
Overall U-value.....: 0.592 BTU/hr/sqft/F
Overall Shade Coeff....: 0.847

Predefined Glass Data

Glass Transmissivity	Glass Reflectivity	Glass Absorptivity	Glass U-Value	Shade Coefficient
0.712	0.134	0.154	0.490	0.890

WINDOW TYPE 4: (PRE-DEFINED WINDOW)

Glass Group.....: DOUBLE PANE, CLEAR
Glass Type.....: 1/8" clear + 1/8" clear
Window Description.....: W-4, BLDG 642, FT DEVENS
Height.....: 8.09 ft
Width.....: 4.75 ft
Frame Type.....: Aluminum with thermal breaks
Interior Shade Type....: No Shades Used
Overall U-value.....: 0.580 BTU/hr/sqft/F
Overall Shade Coeff....: 0.846

Predefined Glass Data

Glass Transmissivity	Glass Reflectivity	Glass Absorptivity	Glass U-Value	Shade Coefficient
0.712	0.134	0.154	0.490	0.890

WINDOW TYPE 5: (PRE-DEFINED WINDOW)

Glass Group.....: DOUBLE PANE, CLEAR
Glass Type.....: 1/8" clear + 1/8" clear
Window Description.....: W-5, BLDG 642, FT DEVENS
Height.....: 5.42 ft
Width.....: 4.75 ft
Frame Type.....: Aluminum with thermal breaks
Interior Shade Type....: No Shades Used
Overall U-value.....: 0.582 BTU/hr/sqft/F
Overall Shade Coeff....: 0.847

Predefined Glass Data

Glass Transmissivity	Glass Reflectivity	Glass Absorptivity	Glass U-Value	Shade Coefficient
0.712	0.134	0.154	0.490	0.890

WINDOW TYPE 6: (PRE-DEFINED WINDOW)

Glass Group.....: DOUBLE PANE, CLEAR
Glass Type.....: 1/8" clear + 1/8" clear
Window Description.....: W-6, BLDG 642, FT DEVENS
Height.....: 4.09 ft
Width.....: 4.75 ft
Frame Type.....: Aluminum with thermal breaks
Interior Shade Type....: No Shades Used
Overall U-value.....: 0.585 BTU/hr/sqft/F
Overall Shade Coeff....: 0.847

Predefined Glass Data

Glass Transmissivity	Glass Reflectivity	Glass Absorptivity	Glass U-Value	Shade Coefficient
0.712	0.134	0.154	0.490	0.890

WINDOW TYPE 7: (PRE-DEFINED WINDOW)

Glass Group.....: DOUBLE PANE, CLEAR
Glass Type.....: 1/8" clear + 1/8" clear
Window Description.....: W-7, BLDG 642, FT DEVENS
Height.....: 4.09 ft
Width.....: 3.42 ft
Frame Type.....: Aluminum with thermal breaks
Interior Shade Type....: No Shades Used
Overall U-value.....: 0.588 BTU/hr/sqft/F
Overall Shade Coeff....: 0.847

Predefined Glass Data

Glass Transmissivity	Glass Reflectivity	Glass Absorptivity	Glass U-Value	Shade Coefficient
0.712	0.134	0.154	0.490	0.890

WINDOW TYPE 8: (PRE-DEFINED WINDOW)

Glass Group.....: DOUBLE PANE, CLEAR
Glass Type.....: 1/8" clear + 1/8" clear
Window Description.....: W-8, BLDG 642, FT DEVENS
Height.....: 5.42 ft
Width.....: 3.75 ft
Frame Type.....: Aluminum with thermal breaks
Interior Shade Type....: No Shades Used
Overall U-value.....: 0.585 BTU/hr/sqft/F
Overall Shade Coeff....: 0.847

Predefined Glass Data

Glass Transmissivity	Glass Reflectivity	Glass Absorptivity	Glass U-Value	Shade Coefficient
0.712	0.134	0.154	0.490	0.890

WINDOW TYPE 9: (PRE-DEFINED WINDOW)

Glass Group.....: DOUBLE PANE, CLEAR
Glass Type.....: 1/8" clear + 1/8" clear
Window Description.....: W-9, BLDG 642, FT DEVENS
Height.....: 5.42 ft
Width.....: 3.74 ft
Frame Type.....: Aluminum with thermal breaks
Interior Shade Type....: No Shades Used
Overall U-value.....: 0.585 BTU/hr/sqft/F
Overall Shade Coeff....: 0.847

Predefined Glass Data

Glass Transmissivity	Glass Reflectivity	Glass Absorptivity	Glass U-Value	Shade Coefficient
0.712	0.134	0.154	0.490	0.890

WINDOW TYPE 10: (PRE-DEFINED WINDOW)

Glass Group.....: DOUBLE PANE, CLEAR
Glass Type.....: 1/8" clear + 1/8" clear
Window Description.....: W-10, BLDG 642, FT DEVENS
Height.....: 5.42 ft
Width.....: 6.75 ft
Frame Type.....: Aluminum with thermal breaks
Interior Shade Type....: No Shades Used
Overall U-value.....: 0.580 BTU/hr/sqft/F
Overall Shade Coeff....: 0.846

Predefined Glass Data

Glass Transmissivity	Glass Reflectivity	Glass Absorptivity	Glass U-Value	Shade Coefficient
0.712	0.134	0.154	0.490	0.890

WINDOW TYPE 11: (PRE-DEFINED WINDOW)

Glass Group.....: DOUBLE PANE, CLEAR
Glass Type.....: 1/8" clear + 1/8" clear
Window Description.....: W-11, BLDG 642, FT DEVENS
Height.....: 5.42 ft
Width.....: 20.50 ft
Frame Type.....: Aluminum with thermal breaks
Interior Shade Type....: No Shades Used
Overall U-value.....: 0.576 BTU/hr/sqft/F
Overall Shade Coeff....: 0.846

Predefined Glass Data

Glass Transmissivity	Glass Reflectivity	Glass Absorptivity	Glass U-Value	Shade Coefficient
0.712	0.134	0.154	0.490	0.890

BUILDING 642

SPACE DESCRIPTIONS

SPACE DESCRIPTION

Prepared by: NEW ENGLAND DIVISION
HAP v3.04

12-09-94
Page 1

****

GENERAL
- Name.....: BLDG 642, OFFICE 101
- Floor Area.....: 362.0 sqft
- Building Weight.: 130.0 lb/sqft
- Windows Shaded..? N
- Partitions Used.? N

LIGHTING
- Overhead Fixture: Recessed
- Lamp Wattage....: 2.00 W/sqft
- Ballast Mult....: 1.25
- Task Lighting...: 0.00 W/sqft

PEOPLE
- Occupancy.....: 3 People
- Activity Level..: Office Work
- Sensible.....: 245.0 BTU/hr
- Latent.....: 205.0 BTU/hr

OTHER LOADS
- Equipment.....: 0.00 W/sqft
- Misc. Sensible..: 0.0 BTU/hr
- Misc. Latent....: 0.0 BTU/hr

SCHEDULES
- Lighting....: BUILDING 642, FT DEVENS
- Task Lights.: BUILDING 642, FT DEVENS
- People.....: BUILDING 642, FT DEVENS
- Equipment...: BUILDING 642, FT DEVENS
- Misc. Sens..: BUILDING 642, FT DEVENS
- Misc. Latent: BUILDING 642, FT DEVENS

INFILTRATION
- Cooling.....: 0.00 CFM/sqft
- Heating.....: 40.0 CFM
- Typical.....: 20.0 CFM
- When Fan On.? N

FLOOR
- Type.....:Slab On Grade
- Perimeter.....: 19.5 ft
- Slab Floor Area.....: 362.0 sqft
- Floor R-Value.....: 0.50
- Insulation R-value....: 0.00

WALL Exp	Gross Area (sqft)	WALL Type	WINDOW Type	WINDOW Qty	WINDOW Shade	WINDOW Type	WINDOW Qty	WINDOW Shade	Any Doors?
S	196.0	3	2	2	-	1	0	-	N

No roof or door data for this space.

No partition data for this space.

SPACE DESCRIPTION

Prepared by: NEW ENGLAND DIVISION
HAP v3.04

12-10-94
Page 1

****

GENERAL
Name.....: BLDG 642, OFFICE 102
Floor Area.....: 356.0 sqft
Building Weight.: 130.0 lb/sqft
Windows Shaded..? N
Partitions Used.? N

LIGHTING
Overhead Fixture: Recessed
Lamp Wattage....: 2.00 W/sqft
Ballast Mult....: 1.25
Task Lighting...: 0.00 W/sqft

PEOPLE
Occupancy.....: 3 People
Activity Level..: Office Work
Sensible.....: 245.0 BTU/hr
Latent.....: 205.0 BTU/hr

OTHER LOADS
Equipment.....: 0.00 W/sqft
Misc. Sensible..: 0.0 BTU/hr
Misc. Latent....: 0.0 BTU/hr

SCHEDULES
Lighting....: BUILDING 642, FT DEVENS
Task Lights.: BUILDING 642, FT DEVENS
People.....: BUILDING 642, FT DEVENS
Equipment...: BUILDING 642, FT DEVENS
Misc. Sens..: BUILDING 642, FT DEVENS
Misc. Latent: BUILDING 642, FT DEVENS

INFILTRATION
Cooling.....: 0.00 CFM/sqft
Heating.....: 60.0 CFM
Typical.....: 30.0 CFM
When Fan On.? N

FLOOR
Type.....:Slab On Grade
Perimeter.....: 39.2 ft
Slab Floor Area.....: 356.0 sqft
Floor R-Value.....: 0.50
Insulation R-value....: 0.00

WALL Exp	Gross Area (sqft)	WALL Type	WINDOW Type	WINDOW Qty	WINDOW Shade	WINDOW Type	WINDOW Qty	WINDOW Shade	Any Doors?
S	346.0	3	2	3	-	1	0	-	N
W	195.0	3	2	0	-	1	0	-	N

No roof or door data for this space.

No partition data for this space.

SPACE DESCRIPTION

Prepared by: NEW ENGLAND DIVISION 12-10-94

HAP v3.04 Page 1

****

GENERAL

Name.....: BLDG 642, OFFICE 103
Floor Area.....: 252.0 sqft
Building Weight.: 130.0 lb/sqft
Windows Shaded..? N
Partitions Used.? N

LIGHTING

Overhead Fixture: Recessed
Lamp Wattage....: 2.00 W/sqft
Ballast Mult....: 1.25
Task Lighting...: 0.00 W/sqft

PEOPLE

Occupancy.....: 3 People
Activity Level..: Office Work
Sensible.....: 245.0 BTU/hr
Latent.....: 205.0 BTU/hr

OTHER LOADS

Equipment.....: 0.00 W/sqft
Misc. Sensible..: 0.0 BTU/hr
Misc. Latent....: 0.0 BTU/hr

SCHEDULES

Lighting....: BUILDING 642, FT DEVENS
Task Lights.: BUILDING 642, FT DEVENS
People.....: BUILDING 642, FT DEVENS
Equipment...: BUILDING 642, FT DEVENS
Misc. Sens..: BUILDING 642, FT DEVENS
Misc. Latent: BUILDING 642, FT DEVENS

INFILTRATION

Cooling.....: 0.00 CFM/sqft
Heating.....: 60.0 CFM
Typical.....: 30.0 CFM
When Fan On.? N

FLOOR

Type.....:Slab On Grade
Perimeter.....: 19.5 ft
Slab Floor Area.....: 252.0 sqft
Floor R-Value.....: 0.50
Insulation R-value....: 0.00

WALL Exp	Gross Area (sqft)	WALL Type	WINDOW Type	WINDOW Qty	WINDOW Shade	WINDOW Type	WINDOW Qty	WINDOW Shade	Any Doors?
N	196.0	3	2	3	-	1	0	-	N
W	140.0	3	2	0	-	1	0	-	N

No roof or door data for this space.

No partition data for this space.

SPACE DESCRIPTION

Prepared by: NEW ENGLAND DIVISION 12-10-94

HAP v3.04 Page 1

****

GENERAL

Name.....: BLDG 642, OFFICE 104
Floor Area.....: 226.0 sqft
Building Weight.: 130.0 lb/sqft
Windows Shaded..? N
Partitions Used.? N

LIGHTING

Overhead Fixture: Recessed
Lamp Wattage....: 2.00 W/sqft
Ballast Mult....: 1.25
Task Lighting...: 0.00 W/sqft

PEOPLE

Occupancy.....: 3 People
Activity Level..: Office Work
Sensible.....: 245.0 BTU/hr
Latent.....: 205.0 BTU/hr

OTHER LOADS

Equipment.....: 0.00 W/sqft
Misc. Sensible..: 0.0 BTU/hr
Misc. Latent....: 0.0 BTU/hr

SCHEDULES

Lighting....: BUILDING 642, FT DEVENS
Task Lights.: BUILDING 642, FT DEVENS
People.....: BUILDING 642, FT DEVENS
Equipment...: BUILDING 642, FT DEVENS
Misc. Sens..: BUILDING 642, FT DEVENS
Misc. Latent: BUILDING 642, FT DEVENS

INFILTRATION

Cooling.....: 0.00 CFM/sqft
Heating.....: 60.0 CFM
Typical.....: 30.0 CFM
When Fan On.? N

FLOOR

Type.....:Slab On Grade
Perimeter.....: 17.5 ft
Slab Floor Area.....: 226.0 sqft
Floor R-Value.....: 0.50
Insulation R-value....: 0.00

WALL Exp	Gross Area (sqft)	WALL Type	WINDOW Type	WINDOW Qty	WINDOW Shade	WINDOW Type	WINDOW Qty	WINDOW Shade	Any Doors?
N	175.0	3	2	3	-	1	0	-	N

No roof or door data for this space.

No partition data for this space.

SPACE DESCRIPTION

Prepared by: NEW ENGLAND DIVISION 12-10-94

HAP v3.04 Page 1

****

GENERAL

Name.....: BLDG 642, OFFICE 105
Floor Area.....: 284.0 sqft
Building Weight.: 130.0 lb/sqft
Windows Shaded..? N
Partitions Used.? N

LIGHTING

Overhead Fixture: Recessed
Lamp Wattage....: 2.00 W/sqft
Ballast Mult....: 1.25
Task Lighting...: 0.00 W/sqft

PEOPLE

Occupancy.....: 3 People
Activity Level..: Office Work
Sensible.....: 245.0 BTU/hr
Latent.....: 205.0 BTU/hr

OTHER LOADS

Equipment.....: 0.00 W/sqft
Misc. Sensible..: 0.0 BTU/hr
Misc. Latent....: 0.0 BTU/hr

SCHEDULES

Lighting....: BUILDING 642, FT DEVENS
Task Lights.: BUILDING 642, FT DEVENS
People.....: BUILDING 642, FT DEVENS
Equipment...: BUILDING 642, FT DEVENS
Misc. Sens..: BUILDING 642, FT DEVENS
Misc. Latent: BUILDING 642, FT DEVENS

INFILTRATION

Cooling.....: 0.00 CFM/sqft
Heating.....: 60.0 CFM
Typical.....: 30.0 CFM
When Fan On.? N

FLOOR

Type.....:Slab On Grade
Perimeter.....: 21.5 ft
Slab Floor Area.....: 284.0 sqft
Floor R-Value.....: 0.50
Insulation R-value....: 0.00

WALL Exp	Gross Area (sqft)	WALL Type	WINDOW Type	WINDOW Qty	WINDOW Shade	WINDOW Type	WINDOW Qty	WINDOW Shade	Any Doors?
N	215.0	3	2	3	-	1	0	-	N

No roof or door data for this space.

No partition data for this space.

SPACE DESCRIPTION

Prepared by: NEW ENGLAND DIVISION 12-10-94

HAP v3.04 Page 1

****

GENERAL

Name.....: BLDG 642, OFFICE 106
Floor Area.....: 257.0 sqft
Building Weight.: 130.0 lb/sqft
Windows Shaded..? N
Partitions Used.? N

LIGHTING

Overhead Fixture: Recessed
Lamp Wattage....: 2.00 W/sqft
Ballast Mult....: 1.25
Task Lighting...: 0.00 W/sqft

PEOPLE

Occupancy.....: 3 People
Activity Level..: Office Work
Sensible.....: 245.0 BTU/hr
Latent.....: 205.0 BTU/hr

OTHER LOADS

Equipment.....: 0.00 W/sqft
Misc. Sensible..: 0.0 BTU/hr
Misc. Latent....: 0.0 BTU/hr

SCHEDULES

Lighting....: BUILDING 642, FT DEVENS
Task Lights.: BUILDING 642, FT DEVENS
People.....: BUILDING 642, FT DEVENS
Equipment...: BUILDING 642, FT DEVENS
Misc. Sens..: BUILDING 642, FT DEVENS
Misc. Latent: BUILDING 642, FT DEVENS

INFILTRATION

Cooling.....: 0.00 CFM/sqft
Heating.....: 60.0 CFM
Typical.....: 30.0 CFM
When Fan On.? N

FLOOR

Type.....:Slab On Grade
Perimeter.....: 19.5 ft
Slab Floor Area.....: 257.0 sqft
Floor R-Value.....: 0.50
Insulation R-value....: 0.00

WALL Exp	Gross Area (sqft)	WALL Type	WINDOW Type	WINDOW Qty	WINDOW Shade	WINDOW Type	WINDOW Qty	WINDOW Shade	Any Doors?
N	195.0	3	2	3	-	1	0	-	N

No roof or door data for this space.

No partition data for this space.

SPACE DESCRIPTION

Prepared by: NEW ENGLAND DIVISION 12-10-94

HAP v3.04 Page 1

****

GENERAL

Name.....: BLDG 642, OFFICE 107
Floor Area.....: 510.0 sqft
Building Weight.: 130.0 lb/sqft
Windows Shaded..? N
Partitions Used.? N

LIGHTING

Overhead Fixture: Recessed
Lamp Wattage....: 2.00 W/sqft
Ballast Mult....: 1.25
Task Lighting...: 0.00 W/sqft

PEOPLE

Occupancy.....: 8 People
Activity Level..: Office Work
Sensible.....: 245.0 BTU/hr
Latent.....: 205.0 BTU/hr

OTHER LOADS

Equipment.....: 0.00 W/sqft
Misc. Sensible..: 0.0 BTU/hr
Misc. Latent....: 0.0 BTU/hr

SCHEDULES

Lighting....: BUILDING 642, FT DEVENS
Task Lights.: BUILDING 642, FT DEVENS
People.....: BUILDING 642, FT DEVENS
Equipment...: BUILDING 642, FT DEVENS
Misc. Sens..: BUILDING 642, FT DEVENS
Misc. Latent: BUILDING 642, FT DEVENS

INFILTRATION

Cooling.....: 0.00 CFM/sqft
Heating.....: 90.0 CFM
Typical.....: 60.0 CFM
When Fan On.? N

FLOOR

Type.....:Slab On Grade
Perimeter.....: 39.0 ft
Slab Floor Area.....: 510.0 sqft
Floor R-Value.....: 0.50
Insulation R-value....: 0.00

WALL Exp	Gross Area (sqft)	WALL Type	WINDOW Type	WINDOW Qty	WINDOW Shade	WINDOW Type	WINDOW Qty	WINDOW Shade	Any Doors?
N	390.0	3	2	6	-	1	0	-	N
E	140.0	3	2	0	-	1	0	-	N

No roof or door data for this space.

No partition data for this space.

SPACE DESCRIPTION

Prepared by: NEW ENGLAND DIVISION 12-10-94

HAP v3.04 Page 1

****

GENERAL

Name.....: BLDG 642, OFFICE 108

Floor Area.....: 235.0 sqft

Building Weight.: 130.0 lb/sqft

Windows Shaded..? N

Partitions Used.? N

LIGHTING

Overhead Fixture: Recessed

Lamp Wattage....: 2.00 W/sqft

Ballast Mult....: 1.25

Task Lighting...: 0.00 W/sqft

PEOPLE

Occupancy.....: 3 People

Activity Level..: Office Work

Sensible.....: 245.0 BTU/hr

Latent.....: 205.0 BTU/hr

OTHER LOADS

Equipment.....: 0.00 W/sqft

Misc. Sensible..: 0.0 BTU/hr

Misc. Latent....: 0.0 BTU/hr

SCHEDULES

Lighting....: BUILDING 642, FT DEVENS

Task Lights.: BUILDING 642, FT DEVENS

People.....: BUILDING 642, FT DEVENS

Equipment...: BUILDING 642, FT DEVENS

Misc. Sens..: BUILDING 642, FT DEVENS

Misc. Latent: BUILDING 642, FT DEVENS

INFILTRATION

Cooling.....: 0.00 CFM/sqft

Heating.....: 40.0 CFM

Typical.....: 20.0 CFM

When Fan On.? N

FLOOR

Type.....:Slab On Grade

Perimeter.....: 32.5 ft

Slab Floor Area.....: 235.0 sqft

Floor R-Value.....: 0.50

Insulation R-value....: 0.00

WALL Exp	Gross Area (sqft)	WALL Type	WINDOW Type	WINDOW Qty	WINDOW Shade	WINDOW Type	WINDOW Qty	WINDOW Shade	Any Doors?
S	130.0	3	2	2	-	1	0	-	N
E	195.0	3	2	0	-	1	0	-	N

No roof or door data for this space.

No partition data for this space.

SPACE DESCRIPTION

Prepared by: NEW ENGLAND DIVISION 12-10-94

HAP v3.04 Page 1

****

GENERAL

Name.....: BLDG 642, OFFICE 109
Floor Area.....: 465.0 sqft
Building Weight.: 130.0 lb/sqft
Windows Shaded..? N
Partitions Used.? N

LIGHTING

Overhead Fixture: Recessed
Lamp Wattage....: 2.00 W/sqft
Ballast Mult....: 1.25
Task Lighting...: 0.00 W/sqft

PEOPLE

Occupancy.....: 6 People
Activity Level..: Office Work
Sensible.....: 245.0 BTU/hr
Latent.....: 205.0 BTU/hr

OTHER LOADS

Equipment.....: 0.00 W/sqft
Misc. Sensible..: 0.0 BTU/hr
Misc. Latent....: 0.0 BTU/hr

SCHEDULES

Lighting....: BUILDING 642, FT DEVENS
Task Lights.: BUILDING 642, FT DEVENS
People.....: BUILDING 642, FT DEVENS
Equipment...: BUILDING 642, FT DEVENS
Misc. Sens..: BUILDING 642, FT DEVENS
Misc. Latent: BUILDING 642, FT DEVENS

INFILTRATION

Cooling.....: 0.00 CFM/sqft
Heating.....: 100.0 CFM
Typical.....: 50.0 CFM
When Fan On.? N

FLOOR

Type.....:Slab On Grade
Perimeter.....: 24.7 ft
Slab Floor Area.....: 465.0 sqft
Floor R-Value.....: 0.50
Insulation R-value....: 0.00

WALL Exp	Gross Area (sqft)	WALL Type	WINDOW Type	WINDOW Qty	WINDOW Shade	WINDOW Type	WINDOW Qty	WINDOW Shade	Any Doors?
S	247.0	3	8	3	-	1	0	-	Y

ROOF Exp	Slope (deg)	Gross Area (sqft)	ROOF Type	SKYLIGHT Type	SKYLIGHT Qty
-	-	-	-	-	-
-	-	-	-	-	-
-	-	-	-	-	-
-	-	-	-	-	-

DOOR

Gross Area..: 20.1 sqft
Uvalue.....: 0.300
Glass Area..: 0.0 sqft
Glass U-val.: 0.500
Shade Coeff.: 1.00
Glass Shaded? N

No partition data for this space.

SPACE DESCRIPTION

Prepared by: NEW ENGLAND DIVISION
HAP v3.04

12-10-94
Page 1

****

GENERAL
Name.....: BLDG 642, STORAGE 110
Floor Area.....: 136.5 sqft
Building Weight.: 130.0 lb/sqft
Windows Shaded..? N
Partitions Used.? N

LIGHTING
Overhead Fixture: Recessed
Lamp Wattage....: 2.00 W/sqft
Ballast Mult....: 1.25
Task Lighting...: 0.00 W/sqft

PEOPLE
Occupancy.....: 0 People
Activity Level..: Office Work
Sensible.....: 245.0 BTU/hr
Latent.....: 205.0 BTU/hr

OTHER LOADS
Equipment.....: 0.00 W/sqft
Misc. Sensible..: 0.0 BTU/hr
Misc. Latent....: 0.0 BTU/hr

SCHEDULES
Lighting....: BUILDING 642, FT DEVENS
Task Lights.: BUILDING 642, FT DEVENS
People.....: BUILDING 642, FT DEVENS
Equipment...: BUILDING 642, FT DEVENS
Misc. Sens..: BUILDING 642, FT DEVENS
Misc. Latent: BUILDING 642, FT DEVENS

INFILTRATION
Cooling.....: 0.00 CFM/sqft
Heating.....: 0.0 CFM
Typical.....: 0.0 CFM
When Fan On.? N

FLOOR
Type.....:Slab On Grade
Perimeter.....: 7.0 ft
Slab Floor Area.....: 136.5 sqft
Floor R-Value.....: 0.50
Insulation R-value....: 0.00

WALL Exp	Gross Area (sqft)	WALL Type	WINDOW Type	WINDOW Qty	WINDOW Shade	WINDOW Type	WINDOW Qty	WINDOW Shade	Any Doors?
S	70.0	3	2	0	-	1	0	-	N

No roof or door data for this space.

No partition data for this space.

SPACE DESCRIPTION

Prepared by: NEW ENGLAND DIVISION 12-10-94

HAP v3.04 Page 1

****

GENERAL

Name.....: BLDG 642, BREAK RM 111
Floor Area.....: 404.0 sqft
Building Weight.: 130.0 lb/sqft
Windows Shaded..? N
Partitions Used.? N

LIGHTING

Overhead Fixture: Recessed
Lamp Wattage....: 2.00 W/sqft
Ballast Mult....: 1.25
Task Lighting...: 0.00 W/sqft

PEOPLE

Occupancy.....: 8 People
Activity Level..: Office Work
Sensible.....: 245.0 BTU/hr
Latent.....: 205.0 BTU/hr

OTHER LOADS

Equipment.....: 0.00 W/sqft
Misc. Sensible..: 0.0 BTU/hr
Misc. Latent....: 0.0 BTU/hr

SCHEDULES

Lighting....: BUILDING 642, FT DEVENS
Task Lights.: BUILDING 642, FT DEVENS
People.....: BUILDING 642, FT DEVENS
Equipment...: BUILDING 642, FT DEVENS
Misc. Sens..: BUILDING 642, FT DEVENS
Misc. Latent: BUILDING 642, FT DEVENS

INFILTRATION

Cooling.....: 0.00 CFM/sqft
Heating.....: 40.0 CFM
Typical.....: 20.0 CFM
When Fan On.? N

FLOOR

Type.....:Slab On Grade
Perimeter.....: 19.5 ft
Slab Floor Area.....: 404.0 sqft
Floor R-Value.....: 0.50
Insulation R-value....: 0.00

WALL Exp	Gross Area (sqft)	WALL Type	WINDOW Type	WINDOW Qty	WINDOW Shade	WINDOW Type	WINDOW Qty	WINDOW Shade	Any Doors?
E	195.0	3	2	2	-	1	0	-	N

No roof or door data for this space.

No partition data for this space.

SPACE DESCRIPTION

Prepared by: NEW ENGLAND DIVISION 12-10-94

HAP v3.04 Page 1

****

GENERAL

Name.....: BLDG 642, REST 113 & 122
Floor Area.....: 182.3 sqft
Building Weight.: 130.0 lb/sqft
Windows Shaded..? N
Partitions Used.? N

LIGHTING

Overhead Fixture: Recessed
Lamp Wattage....: 2.00 W/sqft
Ballast Mult....: 1.25
Task Lighting...: 0.00 W/sqft

PEOPLE

Occupancy.....: 0 People
Activity Level..: Office Work
Sensible.....: 245.0 BTU/hr
Latent.....: 205.0 BTU/hr

OTHER LOADS

Equipment.....: 0.00 W/sqft
Misc. Sensible..: 0.0 BTU/hr
Misc. Latent....: 0.0 BTU/hr

SCHEDULES

Lighting....: BUILDING 642, FT DEVENS
Task Lights.: BUILDING 642, FT DEVENS
People.....: BUILDING 642, FT DEVENS
Equipment...: BUILDING 642, FT DEVENS
Misc. Sens..: BUILDING 642, FT DEVENS
Misc. Latent: BUILDING 642, FT DEVENS

INFILTRATION

Cooling.....: 0.00 CFM/sqft
Heating.....: 20.0 CFM
Typical.....: 10.0 CFM
When Fan On.? N

FLOOR

Type.....:Slab On Grade
Perimeter.....: 12.5 ft
Slab Floor Area.....: 182.3 sqft
Floor R-Value.....: 0.50
Insulation R-value....: 0.00

WALL Exp	Gross Area (sqft)	WALL Type	WINDOW Type	WINDOW Qty	WINDOW Shade	WINDOW Type	WINDOW Qty	WINDOW Shade	Any Doors?
E	135.0	3	2	1	-	1	0	-	N

No roof or door data for this space.

No partition data for this space.

SPACE DESCRIPTION

Prepared by: NEW ENGLAND DIVISION 12-10-94

HAP v3.04 Page 1

****

GENERAL

Name.....: BLDG 642, CONFERENCE 114
Floor Area.....: 2702.0 sqft
Building Weight.: 130.0 lb/sqft
Windows Shaded..? N
Partitions Used.? N

LIGHTING

Overhead Fixture: Recessed
Lamp Wattage....: 2.00 W/sqft
Ballast Mult....: 1.25
Task Lighting...: 0.00 W/sqft

PEOPLE

Occupancy.....: 75 People
Activity Level..: Seated at Rest
Sensible.....: 230.0 BTU/hr
Latent.....: 120.0 BTU/hr

OTHER LOADS

Equipment.....: 0.00 W/sqft
Misc. Sensible..: 0.0 BTU/hr
Misc. Latent....: 0.0 BTU/hr

SCHEDULES

Lighting....: BUILDING 642, FT DEVENS
Task Lights.: BUILDING 642, FT DEVENS
People.....: BUILDING 642, FT DEVENS
Equipment...: BUILDING 642, FT DEVENS
Misc. Sens..: BUILDING 642, FT DEVENS
Misc. Latent: BUILDING 642, FT DEVENS

INFILTRATION

Cooling.....: 0.00 CFM/sqft
Heating.....: 200.0 CFM
Typical.....: 100.0 CFM
When Fan On.? N

FLOOR

Type.....:Slab On Grade
Perimeter.....: 69.0 ft
Slab Floor Area.....: 2702.0 sqft
Floor R-Value.....: 0.50
Insulation R-value....: 0.00

WALL Exp	Gross Area (sqft)	WALL Type	WINDOW Type	WINDOW Qty	WINDOW Shade	WINDOW Type	WINDOW Qty	WINDOW Shade	Any Doors?
N	300.0	3	1	4	-	4	3	-	N
S	390.0	3	1	4	-	4	3	-	Y

ROOF Exp	Slope (deg)	Gross Area (sqft)	ROOF Type	SKYLIGHT Type	SKYLIGHT Qty
-	-	-	-	-	-
-	-	-	-	-	-
-	-	-	-	-	-
-	-	-	-	-	-

DOOR

Gross Area..: 20.1 sqft
Uvalue.....: 0.300
Glass Area..: 0.0 sqft
Glass U-val.: 0.500
Shade Coeff.: 1.00
Glass Shaded? N

No partition data for this space.

SPACE DESCRIPTION

Prepared by: NEW ENGLAND DIVISION
HAP v3.04

12-10-94
Page 1

****

GENERAL
Name.....: BLDG 642, VESTIBULE 115
Floor Area.....: 89.9 sqft
Building Weight.: 130.0 lb/sqft
Windows Shaded..? N
Partitions Used.? N

LIGHTING
Overhead Fixture: Recessed
Lamp Wattage....: 2.00 W/sqft
Ballast Mult....: 1.25
Task Lighting...: 0.00 W/sqft

PEOPLE
Occupancy.....: 0 People
Activity Level..: Office Work
Sensible.....: 245.0 BTU/hr
Latent.....: 205.0 BTU/hr

OTHER LOADS
Equipment.....: 0.00 W/sqft
Misc. Sensible..: 0.0 BTU/hr
Misc. Latent....: 0.0 BTU/hr

SCHEDULES
Lighting....: BUILDING 642, FT DEVENS
Task Lights.: BUILDING 642, FT DEVENS
People.....: BUILDING 642, FT DEVENS
Equipment...: BUILDING 642, FT DEVENS
Misc. Sens..: BUILDING 642, FT DEVENS
Misc. Latent: BUILDING 642, FT DEVENS

INFILTRATION
Cooling.....: 0.00 CFM/sqft
Heating.....: 100.0 CFM
Typical.....: 50.0 CFM
When Fan On.? N

FLOOR
Type.....:Slab On Grade
Perimeter.....: 15.5 ft
Slab Floor Area.....: 89.9 sqft
Floor R-Value.....: 0.50
Insulation R-value....: 0.00

WALL Exp	Gross Area (sqft)	WALL Type	WINDOW Type	WINDOW Qty	WINDOW Shade	WINDOW Type	WINDOW Qty	WINDOW Shade	Any Doors?
N	155.0	3	6	1	-	1	0	-	Y

ROOF Exp	Slope (deg)	Gross Area (sqft)	ROOF Type	SKYLIGHT Type	SKYLIGHT Qty
-	-	-	-	-	-
-	-	-	-	-	-
-	-	-	-	-	-
-	-	-	-	-	-

DOOR
Gross Area..: 20.1 sqft
Uvalue.....: 0.300
Glass Area..: 0.0 sqft
Glass U-val.: 0.500
Shade Coeff.: 1.00
Glass Shaded? N

No partition data for this space.

SPACE DESCRIPTION

Prepared by: NEW ENGLAND DIVISION
HAP v3.04

12-10-94
Page 1

****

GENERAL
- Name.....: BLDG 642, PHYS FIT 117
- Floor Area.....: 1759.3 sqft
- Building Weight.: 130.0 lb/sqft
- Windows Shaded..? N
- Partitions Used.? N

LIGHTING
- Overhead Fixture: Recessed
- Lamp Wattage....: 2.00 W/sqft
- Ballast Mult....: 1.25
- Task Lighting...: 0.00 W/sqft

PEOPLE
- Occupancy.....: 20 People
- Activity Level..: Heavy Work
- Sensible.....: 525.0 BTU/hr
- Latent.....: 925.0 BTU/hr

OTHER LOADS
- Equipment.....: 0.00 W/sqft
- Misc. Sensible..: 0.0 BTU/hr
- Misc. Latent....: 0.0 BTU/hr

SCHEDULES
- Lighting....: BUILDING 642, FT DEVENS
- Task Lights.: BUILDING 642, FT DEVENS
- People.....: BUILDING 642, FT DEVENS
- Equipment...: BUILDING 642, FT DEVENS
- Misc. Sens..: BUILDING 642, FT DEVENS
- Misc. Latent: BUILDING 642, FT DEVENS

INFILTRATION
- Cooling.....: 0.00 CFM/sqft
- Heating.....: 200.0 CFM
- Typical.....: 100.0 CFM
- When Fan On.? N

FLOOR
- Type.....:Above Unconditioned Space
- Floor Area.....: 1759.3 sqft
- U-value.....: 1.500
- Max Space Temp.....: 80.0 F
- Ambient Temp @ Max....: 90.0 F
- Min Space Temp.....: 50.0 F
- Ambient Temp @ Minimum: 0.0 F

WALL Exp	Gross Area (sqft)	WALL Type	WINDOW Type	WINDOW Qty	WINDOW Shade	WINDOW Type	WINDOW Qty	WINDOW Shade	Any Doors?
N	330.0	3	7	4	-	6	1	-	N
E	435.0	3	7	3	-	6	2	-	N

No roof or door data for this space.

No partition data for this space.

SPACE DESCRIPTION

Prepared by: NEW ENGLAND DIVISION 12-10-94

HAP v3.04 Page 1

****

GENERAL

Name.....: BLDG 642, VESTIBULE 119
Floor Area.....: 39.0 sqft
Building Weight.: 130.0 lb/sqft
Windows Shaded..? N
Partitions Used.? N

LIGHTING

Overhead Fixture: Recessed
Lamp Wattage....: 2.00 W/sqft
Ballast Mult....: 1.25
Task Lighting...: 0.00 W/sqft

PEOPLE

Occupancy.....: 0 People
Activity Level..: Office Work
Sensible.....: 245.0 BTU/hr
Latent.....: 205.0 BTU/hr

OTHER LOADS

Equipment.....: 0.00 W/sqft
Misc. Sensible..: 0.0 BTU/hr
Misc. Latent....: 0.0 BTU/hr

SCHEDULES

Lighting....: BUILDING 642, FT DEVENS
Task Lights.: BUILDING 642, FT DEVENS
People.....: BUILDING 642, FT DEVENS
Equipment...: BUILDING 642, FT DEVENS
Misc. Sens..: BUILDING 642, FT DEVENS
Misc. Latent: BUILDING 642, FT DEVENS

INFILTRATION

Cooling.....: 0.00 CFM/sqft
Heating.....: 100.0 CFM
Typical.....: 50.0 CFM
When Fan On.? N

FLOOR

Type.....:Slab On Grade
Perimeter.....: 6.0 ft
Slab Floor Area.....: 39.0 sqft
Floor R-Value.....: 0.50
Insulation R-value....: 0.00

WALL Exp	Gross Area (sqft)	WALL Type	WINDOW Type	WINDOW Qty	WINDOW Shade	WINDOW Type	WINDOW Qty	WINDOW Shade	Any Doors?
E	60.0	3	6	0	-	1	0	-	Y

ROOF Exp	Slope (deg)	Gross Area (sqft)	ROOF Type	SKYLIGHT Type	SKYLIGHT Qty
-	-	-	-	-	-
-	-	-	-	-	-
-	-	-	-	-	-
-	-	-	-	-	-

DOOR

Gross Area..: 40.2 sqft
Uvalue.....: 0.300
Glass Area..: 0.0 sqft
Glass U-val.: 0.500
Shade Coeff.: 1.00
Glass Shaded? N

No partition data for this space.

SPACE DESCRIPTION

Prepared by: NEW ENGLAND DIVISION 12-10-94

HAP v3.04 Page 1

****

GENERAL

Name.....: BLDG 642, SUPPLY SGT 120
Floor Area.....: 398.0 sqft
Building Weight.: 130.0 lb/sqft
Windows Shaded..? N
Partitions Used.? N

LIGHTING

Overhead Fixture: Recessed
Lamp Wattage....: 2.00 W/sqft
Ballast Mult....: 1.25
Task Lighting...: 0.00 W/sqft

PEOPLE

Occupancy.....: 3 People
Activity Level..: Office Work
Sensible.....: 245.0 BTU/hr
Latent.....: 205.0 BTU/hr

OTHER LOADS

Equipment.....: 0.00 W/sqft
Misc. Sensible..: 0.0 BTU/hr
Misc. Latent....: 0.0 BTU/hr

SCHEDULES

Lighting....: BUILDING 642, FT DEVENS
Task Lights.: BUILDING 642, FT DEVENS
People.....: BUILDING 642, FT DEVENS
Equipment...: BUILDING 642, FT DEVENS
Misc. Sens..: BUILDING 642, FT DEVENS
Misc. Latent: BUILDING 642, FT DEVENS

INFILTRATION

Cooling.....: 0.00 CFM/sqft
Heating.....: 40.0 CFM
Typical.....: 20.0 CFM
When Fan On.? N

FLOOR

Type.....:Slab On Grade
Perimeter.....: 0.0 ft
Slab Floor Area.....: 398.0 sqft
Floor R-Value.....: 0.50
Insulation R-value....: 0.00

WALL Exp	Gross Area (sqft)	WALL Type	WINDOW Type	WINDOW Qty	WINDOW Shade	WINDOW Type	WINDOW Qty	WINDOW Shade	Any Doors?
E	80.0	3	7	0	-	4	0	-	N
S	390.0	3	7	1	-	4	0	-	N

No roof or door data for this space.

No partition data for this space.

SPACE DESCRIPTION

Prepared by: NEW ENGLAND DIVISION 12-10-94

HAP v3.04 Page 1

****

GENERAL
- Name.....: BLDG 642, OFFICE 121
- Floor Area.....: 255.0 sqft
- Building Weight.: 130.0 lb/sqft
- Windows Shaded..? N
- Partitions Used.? N

LIGHTING
- Overhead Fixture: Recessed
- Lamp Wattage....: 2.00 W/sqft
- Ballast Mult....: 1.25
- Task Lighting...: 0.00 W/sqft

PEOPLE
- Occupancy.....: 3 People
- Activity Level..: Office Work
- Sensible.....: 245.0 BTU/hr
- Latent.....: 205.0 BTU/hr

OTHER LOADS
- Equipment.....: 0.00 W/sqft
- Misc. Sensible..: 0.0 BTU/hr
- Misc. Latent....: 0.0 BTU/hr

SCHEDULES
- Lighting....: BUILDING 642, FT DEVENS
- Task Lights.: BUILDING 642, FT DEVENS
- People.....: BUILDING 642, FT DEVENS
- Equipment...: BUILDING 642, FT DEVENS
- Misc. Sens..: BUILDING 642, FT DEVENS
- Misc. Latent: BUILDING 642, FT DEVENS

INFILTRATION
- Cooling.....: 0.00 CFM/sqft
- Heating.....: 40.0 CFM
- Typical.....: 20.0 CFM
- When Fan On.? N

FLOOR
- Type.....:Slab On Grade
- Perimeter.....: 19.5 ft
- Slab Floor Area.....: 255.0 sqft
- Floor R-Value.....: 0.50
- Insulation R-value....: 0.00

WALL Exp	Gross Area (sqft)	WALL Type	WINDOW Type	WINDOW Qty	WINDOW Shade	WINDOW Type	WINDOW Qty	WINDOW Shade	Any Doors?
E	195.0	3	2	2	-	1	0	-	N

No roof or door data for this space.

No partition data for this space.

SPACE DESCRIPTION

Prepared by: NEW ENGLAND DIVISION
HAP v3.04

12-10-94
Page 1

****

GENERAL
Name.....: BLDG 642, STORAGE 123
Floor Area.....: 144.0 sqft
Building Weight.: 130.0 lb/sqft
Windows Shaded..? N
Partitions Used.? N

LIGHTING
Overhead Fixture: Recessed
Lamp Wattage....: 2.00 W/sqft
Ballast Mult....: 1.25
Task Lighting...: 0.00 W/sqft

PEOPLE
Occupancy.....: 0 People
Activity Level..: Office Work
Sensible.....: 245.0 BTU/hr
Latent.....: 205.0 BTU/hr

OTHER LOADS
Equipment.....: 0.00 W/sqft
Misc. Sensible..: 0.0 BTU/hr
Misc. Latent....: 0.0 BTU/hr

SCHEDULES
Lighting....: BUILDING 642, FT DEVENS
Task Lights.: BUILDING 642, FT DEVENS
People.....: BUILDING 642, FT DEVENS
Equipment...: BUILDING 642, FT DEVENS
Misc. Sens..: BUILDING 642, FT DEVENS
Misc. Latent: BUILDING 642, FT DEVENS

INFILTRATION
Cooling.....: 0.00 CFM/sqft
Heating.....: 40.0 CFM
Typical.....: 20.0 CFM
When Fan On.? N

FLOOR
Type.....:Slab On Grade
Perimeter.....: 19.5 ft
Slab Floor Area.....: 144.0 sqft
Floor R-Value.....: 0.50
Insulation R-value....: 0.00

WALL Exp	Gross Area (sqft)	WALL Type	WINDOW Type	WINDOW Qty	WINDOW Shade	WINDOW Type	WINDOW Qty	WINDOW Shade	Any Doors?
E	195.0	3	2	2	-	1	0	-	N

No roof or door data for this space.

No partition data for this space.

SPACE DESCRIPTION

Prepared by: NEW ENGLAND DIVISION 12-10-94

HAP v3.04 Page 1

****

GENERAL

Name.....: BLDG 642, OFF 125 & 126
Floor Area.....: 321.8 sqft
Building Weight.: 130.0 lb/sqft
Windows Shaded..? N
Partitions Used.? N

LIGHTING

Overhead Fixture: Recessed
Lamp Wattage....: 2.00 W/sqft
Ballast Mult....: 1.25
Task Lighting...: 0.00 W/sqft

PEOPLE

Occupancy.....: 2 People
Activity Level..: Office Work
Sensible.....: 245.0 BTU/hr
Latent.....: 205.0 BTU/hr

OTHER LOADS

Equipment.....: 0.00 W/sqft
Misc. Sensible..: 0.0 BTU/hr
Misc. Latent....: 0.0 BTU/hr

SCHEDULES

Lighting....: BUILDING 642, FT DEVENS
Task Lights.: BUILDING 642, FT DEVENS
People.....: BUILDING 642, FT DEVENS
Equipment...: BUILDING 642, FT DEVENS
Misc. Sens..: BUILDING 642, FT DEVENS
Misc. Latent: BUILDING 642, FT DEVENS

INFILTRATION

Cooling.....: 0.00 CFM/sqft
Heating.....: 0.0 CFM
Typical.....: 0.0 CFM
When Fan On.? N

FLOOR

Type.....:Slab On Grade
Perimeter.....: 3.0 ft
Slab Floor Area.....: 69.0 sqft
Floor R-Value.....: 0.50
Insulation R-value....: 0.00

WALL Exp	Gross Area (sqft)	WALL Type	WINDOW Type	WINDOW Qty	WINDOW Shade	WINDOW Type	WINDOW Qty	WINDOW Shade	Any Doors?
N	30.0	3	2	0	-	1	0	-	N

No roof or door data for this space.

No partition data for this space.

SPACE DESCRIPTION

Prepared by: NEW ENGLAND DIVISION 12-10-94

HAP v3.04 Page 1

****

GENERAL

Name.....: BLDG 642, FORYER 127
Floor Area.....: 76.0 sqft
Building Weight.: 130.0 lb/sqft
Windows Shaded..? N
Partitions Used.? N

LIGHTING

Overhead Fixture: Recessed
Lamp Wattage....: 2.00 W/sqft
Ballast Mult....: 1.25
Task Lighting...: 0.00 W/sqft

PEOPLE

Occupancy.....: 0 People
Activity Level..: Office Work
Sensible.....: 245.0 BTU/hr
Latent.....: 205.0 BTU/hr

OTHER LOADS

Equipment.....: 0.00 W/sqft
Misc. Sensible..: 0.0 BTU/hr
Misc. Latent....: 0.0 BTU/hr

SCHEDULES

Lighting....: BUILDING 642, FT DEVENS
Task Lights.: BUILDING 642, FT DEVENS
People.....: BUILDING 642, FT DEVENS
Equipment...: BUILDING 642, FT DEVENS
Misc. Sens..: BUILDING 642, FT DEVENS
Misc. Latent: BUILDING 642, FT DEVENS

INFILTRATION

Cooling.....: 0.00 CFM/sqft
Heating.....: 100.0 CFM
Typical.....: 50.0 CFM
When Fan On.? N

FLOOR

Type.....:Slab On Grade
Perimeter.....: 9.5 ft
Slab Floor Area.....: 76.0 sqft
Floor R-Value.....: 0.50
Insulation R-value....: 0.00

WALL Exp	Gross Area (sqft)	WALL Type	WINDOW Type	WINDOW Qty	WINDOW Shade	WINDOW Type	WINDOW Qty	WINDOW Shade	Any Doors?
N	95.0	3	2	0	-	1	0	-	Y

ROOF Exp	Slope (deg)	Gross Area (sqft)	ROOF Type	SKYLIGHT Type	SKYLIGHT Qty	DOOR	
						Gross Area..:	20.1 sqft
						Uvalue.....:	0.300
-	-	-	-	-	-	Glass Area..:	0.0 sqft
-	-	-	-	-	-	Glass U-val.:	0.500
-	-	-	-	-	-	Shade Coeff.:	1.00
-	-	-	-	-	-	Glass Shaded?	N

No partition data for this space.

SPACE DESCRIPTION

Prepared by: NEW ENGLAND DIVISION
HAP v3.04

12-10-94
Page 1

****

GENERAL
Name.....: BLDG 642, OFFICE 129
Floor Area.....: 517.0 sqft
Building Weight.: 130.0 lb/sqft
Windows Shaded..? N
Partitions Used.? N

LIGHTING
Overhead Fixture: Recessed
Lamp Wattage....: 2.00 W/sqft
Ballast Mult....: 1.25
Task Lighting...: 0.00 W/sqft

PEOPLE
Occupancy.....: 4 People
Activity Level..: Office Work
Sensible.....: 245.0 BTU/hr
Latent.....: 205.0 BTU/hr

OTHER LOADS
Equipment.....: 0.00 W/sqft
Misc. Sensible..: 0.0 BTU/hr
Misc. Latent....: 0.0 BTU/hr

SCHEDULES
Lighting....: BUILDING 642, FT DEVENS
Task Lights.: BUILDING 642, FT DEVENS
People.....: BUILDING 642, FT DEVENS
Equipment...: BUILDING 642, FT DEVENS
Misc. Sens..: BUILDING 642, FT DEVENS
Misc. Latent: BUILDING 642, FT DEVENS

INFILTRATION
Cooling.....: 0.00 CFM/sqft
Heating.....: 60.0 CFM
Typical.....: 30.0 CFM
When Fan On.? N

FLOOR
Type.....:Slab On Grade
Perimeter.....: 19.0 ft
Slab Floor Area.....: 517.0 sqft
Floor R-Value.....: 0.50
Insulation R-value....: 0.00

WALL Exp	Gross Area (sqft)	WALL Type	WINDOW Type	WINDOW Qty	WINDOW Shade	WINDOW Type	WINDOW Qty	WINDOW Shade	Any Doors?
N	190.0	3	2	3	-	1	0	-	N

No roof or door data for this space.

No partition data for this space.

SPACE DESCRIPTION

Prepared by: NEW ENGLAND DIVISION
HAP v3.04

12-10-94
Page 1

****

GENERAL
- Name.....: BLDG 642, OFFICE 130
- Floor Area.....: 235.0 sqft
- Building Weight.: 130.0 lb/sqft
- Windows Shaded..? N
- Partitions Used.? N

LIGHTING
- Overhead Fixture: Recessed
- Lamp Wattage....: 2.00 W/sqft
- Ballast Mult....: 1.25
- Task Lighting...: 0.00 W/sqft

PEOPLE
- Occupancy.....: 3 People
- Activity Level..: Office Work
- Sensible.....: 245.0 BTU/hr
- Latent.....: 205.0 BTU/hr

OTHER LOADS
- Equipment.....: 0.00 W/sqft
- Misc. Sensible..: 0.0 BTU/hr
- Misc. Latent....: 0.0 BTU/hr

SCHEDULES
- Lighting....: BUILDING 642, FT DEVENS
- Task Lights.: BUILDING 642, FT DEVENS
- People.....: BUILDING 642, FT DEVENS
- Equipment...: BUILDING 642, FT DEVENS
- Misc. Sens..: BUILDING 642, FT DEVENS
- Misc. Latent: BUILDING 642, FT DEVENS

INFILTRATION
- Cooling.....: 0.00 CFM/sqft
- Heating.....: 40.0 CFM
- Typical.....: 20.0 CFM
- When Fan On.? N

FLOOR
- Type.....:Slab On Grade
- Perimeter.....: 27.0 ft
- Slab Floor Area.....: 235.0 sqft
- Floor R-Value.....: 0.50
- Insulation R-value....: 0.00

WALL Exp	Gross Area (sqft)	WALL Type	WINDOW Type	WINDOW Qty	WINDOW Shade	WINDOW Type	WINDOW Qty	WINDOW Shade	Any Doors?
E	195.0	3	2	0	-	1	0	-	N
N	130.0	3	2	2	-	1	0	-	N

No roof or door data for this space.

No partition data for this space.

SPACE DESCRIPTION

Prepared by: NEW ENGLAND DIVISION
HAP v3.04

12-10-94
Page 1

****

GENERAL
Name.....: BLDG 642, 131, 132 & 133
Floor Area.....: 168.0 sqft
Building Weight.: 130.0 lb/sqft
Windows Shaded..? N
Partitions Used.? N

LIGHTING
Overhead Fixture: Recessed
Lamp Wattage....: 2.00 W/sqft
Ballast Mult....: 1.25
Task Lighting...: 0.00 W/sqft

PEOPLE
Occupancy.....: 2 People
Activity Level..: Office Work
Sensible.....: 245.0 BTU/hr
Latent.....: 205.0 BTU/hr

OTHER LOADS
Equipment.....: 0.00 W/sqft
Misc. Sensible..: 0.0 BTU/hr
Misc. Latent....: 0.0 BTU/hr

SCHEDULES
Lighting....: BUILDING 642, FT DEVENS
Task Lights.: BUILDING 642, FT DEVENS
People.....: BUILDING 642, FT DEVENS
Equipment...: BUILDING 642, FT DEVENS
Misc. Sens..: BUILDING 642, FT DEVENS
Misc. Latent: BUILDING 642, FT DEVENS

INFILTRATION
Cooling.....: 0.00 CFM/sqft
Heating.....: 40.0 CFM
Typical.....: 20.0 CFM
When Fan On.? N

FLOOR
Type.....:Slab On Grade
Perimeter.....: 13.0 ft
Slab Floor Area.....: 168.0 sqft
Floor R-Value.....: 0.50
Insulation R-value....: 0.00

WALL Exp	Gross Area (sqft)	WALL Type	WINDOW Type	WINDOW Qty	WINDOW Shade	WINDOW Type	WINDOW Qty	WINDOW Shade	Any Doors?
S	130.0	3	2	2	-	1	0	-	N

No roof or door data for this space.

No partition data for this space.

SPACE DESCRIPTION

Prepared by: NEW ENGLAND DIVISION 12-10-94

HAP v3.04 Page 1

****

GENERAL

Name.....: 642, 134, 135, 136 & 137
Floor Area.....: 257.0 sqft
Building Weight.: 130.0 lb/sqft
Windows Shaded..? N
Partitions Used.? N

LIGHTING

Overhead Fixture: Recessed
Lamp Wattage....: 2.00 W/sqft
Ballast Mult....: 1.25
Task Lighting...: 0.00 W/sqft

PEOPLE

Occupancy.....: 3 People
Activity Level..: Office Work
Sensible.....: 245.0 BTU/hr
Latent.....: 205.0 BTU/hr

OTHER LOADS

Equipment.....: 0.00 W/sqft
Misc. Sensible..: 0.0 BTU/hr
Misc. Latent....: 0.0 BTU/hr

SCHEDULES

Lighting....: BUILDING 642, FT DEVENS
Task Lights.: BUILDING 642, FT DEVENS
People.....: BUILDING 642, FT DEVENS
Equipment...: BUILDING 642, FT DEVENS
Misc. Sens..: BUILDING 642, FT DEVENS
Misc. Latent: BUILDING 642, FT DEVENS

INFILTRATION

Cooling.....: 0.00 CFM/sqft
Heating.....: 60.0 CFM
Typical.....: 30.0 CFM
When Fan On.? N

FLOOR

Type.....:Slab On Grade
Perimeter.....: 19.5 ft
Slab Floor Area.....: 257.0 sqft
Floor R-Value.....: 0.50
Insulation R-value....: 0.00

WALL Exp	Gross Area (sqft)	WALL Type	WINDOW Type	WINDOW Qty	WINDOW Shade	WINDOW Type	WINDOW Qty	WINDOW Shade	Any Doors?
S	195.0	3	2	3	-	1	0	-	N

No roof or door data for this space.

No partition data for this space.

SPACE DESCRIPTION

Prepared by: NEW ENGLAND DIVISION
HAP v3.04

12-10-94
Page 1

****

GENERAL
Name.....: BLDG 642, OFFICE 138
Floor Area.....: 721.0 sqft
Building Weight.: 130.0 lb/sqft
Windows Shaded..? N
Partitions Used.? N

LIGHTING
Overhead Fixture: Recessed
Lamp Wattage....: 2.00 W/sqft
Ballast Mult....: 1.25
Task Lighting...: 0.00 W/sqft

PEOPLE
Occupancy.....: 8 People
Activity Level..: Office Work
Sensible.....: 245.0 BTU/hr
Latent.....: 205.0 BTU/hr

OTHER LOADS
Equipment.....: 0.00 W/sqft
Misc. Sensible..: 0.0 BTU/hr
Misc. Latent....: 0.0 BTU/hr

SCHEDULES
Lighting....: BUILDING 642, FT DEVENS
Task Lights.: BUILDING 642, FT DEVENS
People.....: BUILDING 642, FT DEVENS
Equipment...: BUILDING 642, FT DEVENS
Misc. Sens..: BUILDING 642, FT DEVENS
Misc. Latent: BUILDING 642, FT DEVENS

INFILTRATION
Cooling.....: 0.00 CFM/sqft
Heating.....: 120.0 CFM
Typical.....: 60.0 CFM
When Fan On.? N

FLOOR
Type.....:Slab On Grade
Perimeter.....: 53.0 ft
Slab Floor Area.....: 721.0 sqft
Floor R-Value.....: 0.50
Insulation R-value....: 0.00

WALL Exp	Gross Area (sqft)	WALL Type	WINDOW Type	WINDOW Qty	WINDOW Shade	WINDOW Type	WINDOW Qty	WINDOW Shade	Any Doors?
N	390.0	3	2	6	-	1	0	-	N
W	195.0	3	2	0	-	1	0	-	N

No roof or door data for this space.

No partition data for this space.

SPACE DESCRIPTION

Prepared by: NEW ENGLAND DIVISION
HAP v3.04

12-10-94
Page 1

****

GENERAL
- Name.....: BLDG 642, VEST 140 & 146
- Floor Area.....: 147.0 sqft
- Building Weight.: 130.0 lb/sqft
- Windows Shaded..? N
- Partitions Used.? N

LIGHTING
- Overhead Fixture: Recessed
- Lamp Wattage....: 2.00 W/sqft
- Ballast Mult....: 1.25
- Task Lighting...: 0.00 W/sqft

PEOPLE
- Occupancy.....: 0 People
- Activity Level..: Office Work
- Sensible.....: 245.0 BTU/hr
- Latent.....: 205.0 BTU/hr

OTHER LOADS
- Equipment.....: 0.00 W/sqft
- Misc. Sensible..: 0.0 BTU/hr
- Misc. Latent....: 0.0 BTU/hr

SCHEDULES
- Lighting....: BUILDING 642, FT DEVENS
- Task Lights.: BUILDING 642, FT DEVENS
- People.....: BUILDING 642, FT DEVENS
- Equipment...: BUILDING 642, FT DEVENS
- Misc. Sens..: BUILDING 642, FT DEVENS
- Misc. Latent: BUILDING 642, FT DEVENS

INFILTRATION
- Cooling.....: 0.00 CFM/sqft
- Heating.....: 100.0 CFM
- Typical.....: 50.0 CFM
- When Fan On.? N

FLOOR
- Type.....:Slab On Grade
- Perimeter.....: 10.5 ft
- Slab Floor Area.....: 147.0 sqft
- Floor R-Value.....: 0.50
- Insulation R-value....: 0.00

WALL Exp	Gross Area (sqft)	WALL Type	WINDOW Type	WINDOW Qty	WINDOW Shade	WINDOW Type	WINDOW Qty	WINDOW Shade	Any Doors?
W	105.0	3	2	0	-	1	0	-	Y

ROOF Exp	Slope (deg)	Gross Area (sqft)	ROOF Type	SKYLIGHT Type	SKYLIGHT Qty
-	-	-	-	-	-
-	-	-	-	-	-
-	-	-	-	-	-
-	-	-	-	-	-

DOOR
- Gross Area..: 35.0 sqft
- Uvalue.....: 0.300
- Glass Area..: 1.5 sqft
- Glass U-val.: 1.000
- Shade Coeff.: 1.00
- Glass Shaded? N

No partition data for this space.

SPACE DESCRIPTION

Prepared by: NEW ENGLAND DIVISION
HAP v3.04

12-10-94
Page 1

****

GENERAL
Name.....: BLDG 642, MAIL 141
Floor Area.....: 172.0 sqft
Building Weight.: 130.0 lb/sqft
Windows Shaded..? N
Partitions Used.? N

LIGHTING
Overhead Fixture: Recessed
Lamp Wattage....: 2.00 W/sqft
Ballast Mult....: 1.25
Task Lighting...: 0.00 W/sqft

PEOPLE
Occupancy.....: 3 People
Activity Level..: Office Work
Sensible.....: 245.0 BTU/hr
Latent.....: 205.0 BTU/hr

OTHER LOADS
Equipment.....: 0.00 W/sqft
Misc. Sensible..: 0.0 BTU/hr
Misc. Latent....: 0.0 BTU/hr

SCHEDULES
Lighting....: BUILDING 642, FT DEVENS
Task Lights.: BUILDING 642, FT DEVENS
People.....: BUILDING 642, FT DEVENS
Equipment...: BUILDING 642, FT DEVENS
Misc. Sens..: BUILDING 642, FT DEVENS
Misc. Latent: BUILDING 642, FT DEVENS

INFILTRATION
Cooling.....: 0.00 CFM/sqft
Heating.....: 60.0 CFM
Typical.....: 30.0 CFM
When Fan On.? N

FLOOR
Type.....:Slab On Grade
Perimeter.....: 19.5 ft
Slab Floor Area.....: 172.0 sqft
Floor R-Value.....: 0.50
Insulation R-value....: 0.00

WALL Exp	Gross Area (sqft)	WALL Type	WINDOW Type	WINDOW Qty	WINDOW Shade	WINDOW Type	WINDOW Qty	WINDOW Shade	Any Doors?
W	195.0	3	2	3	-	1	0	-	N

No roof or door data for this space.

No partition data for this space.

SPACE DESCRIPTION

Prepared by: NEW ENGLAND DIVISION 12-10-94

HAP v3.04 Page 1

****

GENERAL

Name.....: BLDG 642, OFFICE 142
Floor Area.....: 257.0 sqft
Building Weight.: 130.0 lb/sqft
Windows Shaded..? N
Partitions Used.? N

LIGHTING

Overhead Fixture: Recessed
Lamp Wattage....: 2.00 W/sqft
Ballast Mult....: 1.25
Task Lighting...: 0.00 W/sqft

PEOPLE

Occupancy.....: 3 People
Activity Level..: Office Work
Sensible.....: 245.0 BTU/hr
Latent.....: 205.0 BTU/hr

OTHER LOADS

Equipment.....: 0.00 W/sqft
Misc. Sensible..: 0.0 BTU/hr
Misc. Latent....: 0.0 BTU/hr

SCHEDULES

Lighting....: BUILDING 642, FT DEVENS
Task Lights.: BUILDING 642, FT DEVENS
People.....: BUILDING 642, FT DEVENS
Equipment...: BUILDING 642, FT DEVENS
Misc. Sens..: BUILDING 642, FT DEVENS
Misc. Latent: BUILDING 642, FT DEVENS

INFILTRATION

Cooling.....: 0.00 CFM/sqft
Heating.....: 60.0 CFM
Typical.....: 30.0 CFM
When Fan On.? N

FLOOR

Type.....:Slab On Grade
Perimeter.....: 19.5 ft
Slab Floor Area.....: 257.0 sqft
Floor R-Value.....: 0.50
Insulation R-value....: 0.00

WALL Exp	Gross Area (sqft)	WALL Type	WINDOW Type	WINDOW Qty	WINDOW Shade	WINDOW Type	WINDOW Qty	WINDOW Shade	Any Doors?
W	195.0	3	2	3	-	1	0	-	N

No roof or door data for this space.

No partition data for this space.

SPACE DESCRIPTION

Prepared by: NEW ENGLAND DIVISION
HAP v3.04

12-10-94
Page 1

****

GENERAL
Name.....: BLDG 642, OFFICE 143
Floor Area.....: 760.0 sqft
Building Weight.: 130.0 lb/sqft
Windows Shaded..? N
Partitions Used.? N

LIGHTING
Overhead Fixture: Recessed
Lamp Wattage....: 2.00 W/sqft
Ballast Mult....: 1.25
Task Lighting...: 0.00 W/sqft

PEOPLE
Occupancy.....: 9 People
Activity Level..: Office Work
Sensible.....: 245.0 BTU/hr
Latent.....: 205.0 BTU/hr

OTHER LOADS
Equipment.....: 0.00 W/sqft
Misc. Sensible..: 0.0 BTU/hr
Misc. Latent....: 0.0 BTU/hr

SCHEDULES
Lighting....: BUILDING 642, FT DEVENS
Task Lights.: BUILDING 642, FT DEVENS
People.....: BUILDING 642, FT DEVENS
Equipment...: BUILDING 642, FT DEVENS
Misc. Sens..: BUILDING 642, FT DEVENS
Misc. Latent: BUILDING 642, FT DEVENS

INFILTRATION
Cooling.....: 0.00 CFM/sqft
Heating.....: 180.0 CFM
Typical.....: 90.0 CFM
When Fan On.? N

FLOOR
Type.....:Slab On Grade
Perimeter.....: 58.5 ft
Slab Floor Area.....: 760.0 sqft
Floor R-Value.....: 0.50
Insulation R-value....: 0.00

WALL Exp	Gross Area (sqft)	WALL Type	WINDOW Type	WINDOW Qty	WINDOW Shade	WINDOW Type	WINDOW Qty	WINDOW Shade	Any Doors?
W	585.0	3	2	9	-	1	0	-	N

No roof or door data for this space.

No partition data for this space.

SPACE DESCRIPTION

Prepared by: NEW ENGLAND DIVISION
HAP v3.04

12-10-94
Page 1

****

GENERAL
- Name.....: BLDG 642, ELECTRICAL 144
- Floor Area.....: 173.0 sqft
- Building Weight.: 130.0 lb/sqft
- Windows Shaded..? N
- Partitions Used.? N

LIGHTING
- Overhead Fixture: Recessed
- Lamp Wattage....: 2.00 W/sqft
- Ballast Mult....: 1.25
- Task Lighting...: 0.00 W/sqft

PEOPLE
- Occupancy.....: 2 People
- Activity Level..: Office Work
- Sensible.....: 245.0 BTU/hr
- Latent.....: 205.0 BTU/hr

OTHER LOADS
- Equipment.....: 0.00 W/sqft
- Misc. Sensible..: 0.0 BTU/hr
- Misc. Latent....: 0.0 BTU/hr

SCHEDULES
- Lighting....: BUILDING 642, FT DEVENS
- Task Lights.: BUILDING 642, FT DEVENS
- People.....: BUILDING 642, FT DEVENS
- Equipment...: BUILDING 642, FT DEVENS
- Misc. Sens..: BUILDING 642, FT DEVENS
- Misc. Latent: BUILDING 642, FT DEVENS

INFILTRATION
- Cooling.....: 0.00 CFM/sqft
- Heating.....: 40.0 CFM
- Typical.....: 20.0 CFM
- When Fan On.? N

FLOOR
- Type.....:Slab On Grade
- Perimeter.....: 13.0 ft
- Slab Floor Area.....: 173.0 sqft
- Floor R-Value.....: 0.50
- Insulation R-value....: 0.00

WALL Exp	Gross Area (sqft)	WALL Type	WINDOW Type	WINDOW Qty	WINDOW Shade	WINDOW Type	WINDOW Qty	WINDOW Shade	Any Doors?
W	130.0	3	2	2	-	1	0	-	N

No roof or door data for this space.

No partition data for this space.

SPACE DESCRIPTION

Prepared by: NEW ENGLAND DIVISION
HAP v3.04

12-10-94
Page 1

****

GENERAL
Name.....: BLDG 642, TELEPHONE 145
Floor Area.....: 69.0 sqft
Building Weight.: 130.0 lb/sqft
Windows Shaded..? N
Partitions Used.? N

LIGHTING
Overhead Fixture: Recessed
Lamp Wattage....: 2.00 W/sqft
Ballast Mult....: 1.25
Task Lighting...: 0.00 W/sqft

PEOPLE
Occupancy.....: 0 People
Activity Level..: Office Work
Sensible.....: 245.0 BTU/hr
Latent.....: 205.0 BTU/hr

OTHER LOADS
Equipment.....: 0.00 W/sqft
Misc. Sensible..: 0.0 BTU/hr
Misc. Latent....: 0.0 BTU/hr

SCHEDULES
Lighting....: BUILDING 642, FT DEVENS
Task Lights.: BUILDING 642, FT DEVENS
People.....: BUILDING 642, FT DEVENS
Equipment...: BUILDING 642, FT DEVENS
Misc. Sens..: BUILDING 642, FT DEVENS
Misc. Latent: BUILDING 642, FT DEVENS

INFILTRATION
Cooling.....: 0.00 CFM/sqft
Heating.....: 20.0 CFM
Typical.....: 10.0 CFM
When Fan On.? N

FLOOR
Type.....:Slab On Grade
Perimeter.....: 6.0 ft
Slab Floor Area.....: 69.0 sqft
Floor R-Value.....: 0.50
Insulation R-value....: 0.00

WALL Exp	Gross Area (sqft)	WALL Type	WINDOW Type	WINDOW Qty	WINDOW Shade	WINDOW Type	WINDOW Qty	WINDOW Shade	Any Doors?
W	60.0	3	2	1	-	1	0	-	N

No roof or door data for this space.

No partition data for this space.

SPACE DESCRIPTION

Prepared by: NEW ENGLAND DIVISION
HAP v3.04

12-10-94
Page 1

****

GENERAL
- Name.....: BLDG 642, C11 & C18
- Floor Area.....: 277.9 sqft
- Building Weight.: 130.0 lb/sqft
- Windows Shaded..? N
- Partitions Used.? N

LIGHTING
- Overhead Fixture: Recessed
- Lamp Wattage....: 2.00 W/sqft
- Ballast Mult....: 1.25
- Task Lighting...: 0.00 W/sqft

PEOPLE
- Occupancy.....: 0 People
- Activity Level..: Office Work
- Sensible.....: 245.0 BTU/hr
- Latent.....: 205.0 BTU/hr

OTHER LOADS
- Equipment.....: 0.00 W/sqft
- Misc. Sensible..: 0.0 BTU/hr
- Misc. Latent....: 0.0 BTU/hr

SCHEDULES
- Lighting....: BUILDING 642, FT DEVENS
- Task Lights.: BUILDING 642, FT DEVENS
- People.....: BUILDING 642, FT DEVENS
- Equipment...: BUILDING 642, FT DEVENS
- Misc. Sens..: BUILDING 642, FT DEVENS
- Misc. Latent: BUILDING 642, FT DEVENS

INFILTRATION
- Cooling.....: 0.00 CFM/sqft
- Heating.....: 40.0 CFM
- Typical.....: 20.0 CFM
- When Fan On.? N

FLOOR
- Type.....:Slab On Grade
- Perimeter.....: 5.0 ft
- Slab Floor Area.....: 277.9 sqft
- Floor R-Value.....: 0.50
- Insulation R-value....: 0.00

WALL Exp	Gross Area (sqft)	WALL Type	WINDOW Type	WINDOW Qty	WINDOW Shade	WINDOW Type	WINDOW Qty	WINDOW Shade	Any Doors?
W	50.0	3	1	0	-	1	0	-	Y

ROOF Exp	Slope (deg)	Gross Area (sqft)	ROOF Type	SKYLIGHT Type	SKYLIGHT Qty
-	-	-	-	-	-
-	-	-	-	-	-
-	-	-	-	-	-
-	-	-	-	-	-

DOOR	
Gross Area..:	20.0 sqft
Uvalue.....:	0.300
Glass Area..:	0.0 sqft
Glass U-val.:	0.500
Shade Coeff.:	1.00
Glass Shaded?	N

No partition data for this space.

SPACE DESCRIPTION

Prepared by: NEW ENGLAND DIVISION 12-10-94

HAP v3.04 Page 1

****

GENERAL
- Name.....: BLDG 642, C12 & C19
- Floor Area.....: 277.9 sqft
- Building Weight.: 130.0 lb/sqft
- Windows Shaded..? N
- Partitions Used.? N

LIGHTING
- Overhead Fixture: Recessed
- Lamp Wattage....: 2.00 W/sqft
- Ballast Mult....: 1.25
- Task Lighting...: 0.00 W/sqft

PEOPLE
- Occupancy.....: 0 People
- Activity Level..: Office Work
- Sensible.....: 245.0 BTU/hr
- Latent.....: 205.0 BTU/hr

OTHER LOADS
- Equipment.....: 0.00 W/sqft
- Misc. Sensible..: 0.0 BTU/hr
- Misc. Latent....: 0.0 BTU/hr

SCHEDULES
- Lighting....: BUILDING 642, FT DEVENS
- Task Lights.: BUILDING 642, FT DEVENS
- People.....: BUILDING 642, FT DEVENS
- Equipment...: BUILDING 642, FT DEVENS
- Misc. Sens..: BUILDING 642, FT DEVENS
- Misc. Latent: BUILDING 642, FT DEVENS

INFILTRATION
- Cooling.....: 0.00 CFM/sqft
- Heating.....: 40.0 CFM
- Typical.....: 20.0 CFM
- When Fan On.? N

FLOOR
- Type.....:Slab On Grade
- Perimeter.....: 0.0 ft
- Slab Floor Area.....: 277.9 sqft
- Floor R-Value.....: 0.50
- Insulation R-value....: 0.00

WALL Exp	Gross Area (sqft)	WALL Type	WINDOW Type	WINDOW Qty	WINDOW Shade	WINDOW Type	WINDOW Qty	WINDOW Shade	Any Doors?
E	50.0	3	1	0	-	1	0	-	Y

ROOF Exp	Slope (deg)	Gross Area (sqft)	ROOF Type	SKYLIGHT Type	SKYLIGHT Qty
-	-	-	-	-	-
-	-	-	-	-	-
-	-	-	-	-	-
-	-	-	-	-	-

DOOR
- Gross Area..: 20.0 sqft
- Uvalue.....: 0.300
- Glass Area..: 0.0 sqft
- Glass U-val.: 0.500
- Shade Coeff.: 1.00
- Glass Shaded? N

No partition data for this space.

SPACE DESCRIPTION

Prepared by: NEW ENGLAND DIVISION 12-10-94

HAP v3.04 Page 1

****

GENERAL

Name.....: BLDG 642, C14 & C16
Floor Area.....: 94.5 sqft
Building Weight.: 130.0 lb/sqft
Windows Shaded..? N
Partitions Used.? N

LIGHTING

Overhead Fixture: Recessed
Lamp Wattage....: 2.00 W/sqft
Ballast Mult....: 1.25
Task Lighting...: 0.00 W/sqft

PEOPLE

Occupancy.....: 0 People
Activity Level..: Office Work
Sensible.....: 245.0 BTU/hr
Latent.....: 205.0 BTU/hr

OTHER LOADS

Equipment.....: 0.00 W/sqft
Misc. Sensible..: 0.0 BTU/hr
Misc. Latent....: 0.0 BTU/hr

SCHEDULES

Lighting....: BUILDING 642, FT DEVENS
Task Lights.: BUILDING 642, FT DEVENS
People.....: BUILDING 642, FT DEVENS
Equipment...: BUILDING 642, FT DEVENS
Misc. Sens..: BUILDING 642, FT DEVENS
Misc. Latent: BUILDING 642, FT DEVENS

INFILTRATION

Cooling.....: 0.00 CFM/sqft
Heating.....: 100.0 CFM
Typical.....: 50.0 CFM
When Fan On.? N

FLOOR

Type.....:Slab On Grade
Perimeter.....: 7.0 ft
Slab Floor Area.....: 94.5 sqft
Floor R-Value.....: 0.50
Insulation R-value....: 0.00

WALL Exp	Gross Area (sqft)	WALL Type	WINDOW Type	WINDOW Qty	WINDOW Shade	WINDOW Type	WINDOW Qty	WINDOW Shade	Any Doors?
E	70.0	3	1	0	-	1	0	-	Y

ROOF Exp	Slope (deg)	Gross Area (sqft)	ROOF Type	SKYLIGHT Type	SKYLIGHT Qty
-	-	-	-	-	-
-	-	-	-	-	-
-	-	-	-	-	-
-	-	-	-	-	-

DOOR

Gross Area..: 20.0 sqft
Uvalue.....: 0.300
Glass Area..: 0.0 sqft
Glass U-val.: 0.500
Shade Coeff.: 1.00
Glass Shaded? N

No partition data for this space.

SPACE DESCRIPTION

Prepared by: NEW ENGLAND DIVISION 12-10-94

HAP v3.04 Page 1

****

GENERAL

Name.....: BLDG 642, C15

Floor Area.....: 511.9 sqft

Building Weight.: 130.0 lb/sqft

Windows Shaded..? N

Partitions Used.? N

LIGHTING

Overhead Fixture: Recessed

Lamp Wattage....: 2.00 W/sqft

Ballast Mult....: 1.25

Task Lighting...: 0.00 W/sqft

PEOPLE

Occupancy.....: 0 People

Activity Level..: Office Work

Sensible.....: 245.0 BTU/hr

Latent.....: 205.0 BTU/hr

OTHER LOADS

Equipment.....: 0.00 W/sqft

Misc. Sensible..: 0.0 BTU/hr

Misc. Latent....: 0.0 BTU/hr

SCHEDULES

Lighting....: BUILDING 642, FT DEVENS

Task Lights.: BUILDING 642, FT DEVENS

People.....: BUILDING 642, FT DEVENS

Equipment...: BUILDING 642, FT DEVENS

Misc. Sens..: BUILDING 642, FT DEVENS

Misc. Latent: BUILDING 642, FT DEVENS

INFILTRATION

Cooling.....: 0.00 CFM/sqft

Heating.....: 0.0 CFM

Typical.....: 0.0 CFM

When Fan On.? N

FLOOR

Type.....:Slab On Grade

Perimeter.....: 0.0 ft

Slab Floor Area.....: 510.0 sqft

Floor R-Value.....: 0.50

Insulation R-value....: 0.00

==========

No external wall or window data for this space.

==========

No roof or door data for this space.

==========

No partition data for this space.

==========

SPACE DESCRIPTION

Prepared by: NEW ENGLAND DIVISION 12-10-94

HAP v3.04 Page 1

****

GENERAL

Name.....: BLDG 642, C13 & C17

Floor Area.....: 341.0 sqft

Building Weight.: 130.0 lb/sqft

Windows Shaded..? N

Partitions Used.? N

LIGHTING

Overhead Fixture: Recessed

Lamp Wattage....: 2.00 W/sqft

Ballast Mult....: 1.25

Task Lighting...: 0.00 W/sqft

PEOPLE

Occupancy.....: 0 People

Activity Level..: Office Work

Sensible.....: 245.0 BTU/hr

Latent.....: 205.0 BTU/hr

OTHER LOADS

Equipment.....: 0.00 W/sqft

Misc. Sensible..: 0.0 BTU/hr

Misc. Latent....: 0.0 BTU/hr

SCHEDULES

Lighting....: BUILDING 642, FT DEVENS

Task Lights.: BUILDING 642, FT DEVENS

People.....: BUILDING 642, FT DEVENS

Equipment...: BUILDING 642, FT DEVENS

Misc. Sens..: BUILDING 642, FT DEVENS

Misc. Latent: BUILDING 642, FT DEVENS

INFILTRATION

Cooling.....: 0.00 CFM/sqft

Heating.....: 0.0 CFM

Typical.....: 0.0 CFM

When Fan On.? N

FLOOR

Type.....:Slab On Grade

Perimeter.....: 0.0 ft

Slab Floor Area.....: 341.0 sqft

Floor R-Value.....: 0.50

Insulation R-value....: 0.00

==========

No external wall or window data for this space.

==========

No roof or door data for this space.

==========

No partition data for this space.

==========

SPACE DESCRIPTION

Prepared by: NEW ENGLAND DIVISION 12-10-94

HAP v3.04 Page 1

****

GENERAL

Name.....: BLDG 642, STAIRS S11/S12

Floor Area.....: 126.0 sqft

Building Weight.: 130.0 lb/sqft

Windows Shaded..? N

Partitions Used.? N

LIGHTING

Overhead Fixture: Recessed

Lamp Wattage....: 2.00 W/sqft

Ballast Mult....: 1.25

Task Lighting...: 0.00 W/sqft

PEOPLE

Occupancy.....: 0 People

Activity Level..: Office Work

Sensible.....: 245.0 BTU/hr

Latent.....: 205.0 BTU/hr

OTHER LOADS

Equipment.....: 0.00 W/sqft

Misc. Sensible..: 0.0 BTU/hr

Misc. Latent....: 0.0 BTU/hr

SCHEDULES

Lighting....: BUILDING 642, FT DEVENS

Task Lights.: BUILDING 642, FT DEVENS

People.....: BUILDING 642, FT DEVENS

Equipment...: BUILDING 642, FT DEVENS

Misc. Sens..: BUILDING 642, FT DEVENS

Misc. Latent: BUILDING 642, FT DEVENS

INFILTRATION

Cooling.....: 0.00 CFM/sqft

Heating.....: 0.0 CFM

Typical.....: 0.0 CFM

When Fan On.? N

FLOOR

Type.....:Slab On Grade

Perimeter.....: 9.0 ft

Slab Floor Area.....: 121.5 sqft

Floor R-Value.....: 0.50

Insulation R-value....: 0.00

WALL Exp	Gross Area (sqft)	WALL Type	WINDOW Type	WINDOW Qty	WINDOW Shade	WINDOW Type	WINDOW Qty	WINDOW Shade	Any Doors?
W	90.0	3	2	0	-	1	0	-	N

No roof or door data for this space.

No partition data for this space.

SPACE DESCRIPTION

Prepared by: NEW ENGLAND DIVISION
HAP v3.04

12-10-94
Page 1

****

GENERAL
Name.....: BLDG 642, OFF 201 & 202
Floor Area.....: 164.0 sqft
Building Weight.: 130.0 lb/sqft
Windows Shaded..? N
Partitions Used.? N

LIGHTING
Overhead Fixture: Recessed
Lamp Wattage....: 2.00 W/sqft
Ballast Mult....: 1.25
Task Lighting...: 0.00 W/sqft

PEOPLE
Occupancy.....: 2 People
Activity Level..: Office Work
Sensible.....: 245.0 BTU/hr
Latent.....: 205.0 BTU/hr

OTHER LOADS
Equipment.....: 0.00 W/sqft
Misc. Sensible..: 0.0 BTU/hr
Misc. Latent....: 0.0 BTU/hr

SCHEDULES
Lighting....: BUILDING 642, FT DEVENS
Task Lights.: BUILDING 642, FT DEVENS
People.....: BUILDING 642, FT DEVENS
Equipment...: BUILDING 642, FT DEVENS
Misc. Sens..: BUILDING 642, FT DEVENS
Misc. Latent: BUILDING 642, FT DEVENS

INFILTRATION
Cooling.....: 0.00 CFM/sqft
Heating.....: 40.0 CFM
Typical.....: 20.0 CFM
When Fan On.? N

FLOOR
Type.....:Above Conditioned Space

WALL Exp	Gross Area (sqft)	WALL Type	WINDOW Type	WINDOW Qty	WINDOW Shade	WINDOW Type	WINDOW Qty	WINDOW Shade	Any Doors?
S	127.0	3	2	2	-	5	0	-	N

No roof or door data for this space.

No partition data for this space.

SPACE DESCRIPTION

Prepared by: NEW ENGLAND DIVISION
HAP v3.04

12-10-94
Page 1

****

GENERAL
Name.....: BLDG 642, OFFICE 203
Floor Area.....: 164.0 sqft
Building Weight.: 130.0 lb/sqft
Windows Shaded..? N
Partitions Used.? N

LIGHTING
Overhead Fixture: Recessed
Lamp Wattage....: 2.00 W/sqft
Ballast Mult....: 1.25
Task Lighting...: 0.00 W/sqft

PEOPLE
Occupancy.....: 2 People
Activity Level.,: Office Work
Sensible.....: 245.0 BTU/hr
Latent.....: 205.0 BTU/hr

OTHER LOADS
Equipment.....: 0.00 W/sqft
Misc. Sensible..: 0.0 BTU/hr
Misc. Latent....: 0.0 BTU/hr

SCHEDULES
Lighting....: BUILDING 642, FT DEVENS
Task Lights.: BUILDING 642, FT DEVENS
People.....: BUILDING 642, FT DEVENS
Equipment...: BUILDING 642, FT DEVENS
Misc. Sens..: BUILDING 642, FT DEVENS
Misc. Latent: BUILDING 642, FT DEVENS

INFILTRATION
Cooling.....: 0.00 CFM/sqft
Heating.....: 40.0 CFM
Typical.....: 20.0 CFM
When Fan On.? N

FLOOR
Type.....:Above Conditioned Space

WALL Exp	Gross Area (sqft)	WALL Type	WINDOW Type	WINDOW Qty	WINDOW Shade	WINDOW Type	WINDOW Qty	WINDOW Shade	Any Doors?
W	140.0	3	2	0	-	5	0	-	N
S	130.0	3	2	2	-	5	0	-	N

No roof or door data for this space.

No partition data for this space.

SPACE DESCRIPTION

Prepared by: NEW ENGLAND DIVISION
HAP v3.04

12-10-94
Page 1

****

GENERAL
Name.....: BLDG 642, OFFICE 204
Floor Area.....: 352.0 sqft
Building Weight.: 130.0 lb/sqft
Windows Shaded..? N
Partitions Used.? N

LIGHTING
Overhead Fixture: Recessed
Lamp Wattage....: 2.00 W/sqft
Ballast Mult....: 1.25
Task Lighting...: 0.00 W/sqft

PEOPLE
Occupancy.....: 3 People
Activity Level..: Office Work
Sensible.....: 245.0 BTU/hr
Latent.....: 205.0 BTU/hr

OTHER LOADS
Equipment.....: 0.00 W/sqft
Misc. Sensible..: 0.0 BTU/hr
Misc. Latent....: 0.0 BTU/hr

SCHEDULES
Lighting....: BUILDING 642, FT DEVENS
Task Lights.: BUILDING 642, FT DEVENS
People.....: BUILDING 642, FT DEVENS
Equipment...: BUILDING 642, FT DEVENS
Misc. Sens..: BUILDING 642, FT DEVENS
Misc. Latent: BUILDING 642, FT DEVENS

INFILTRATION
Cooling.....: 0.00 CFM/sqft
Heating.....: 60.0 CFM
Typical.....: 30.0 CFM
When Fan On.? N

FLOOR
Type.....:Above Conditioned Space

WALL Exp	Gross Area (sqft)	WALL Type	WINDOW Type	WINDOW Qty	WINDOW Shade	WINDOW Type	WINDOW Qty	WINDOW Shade	Any Doors?
N	195.0	3	2	3	-	5	0	-	N
W	195.0	3	2	0	-	5	0	-	N

No roof or door data for this space.

No partition data for this space.

SPACE DESCRIPTION

Prepared by: NEW ENGLAND DIVISION
HAP v3.04

12-10-94
Page 1

****

GENERAL
Name.....: 642, 205, 206, 207 & 208
Floor Area.....: 358.0 sqft
Building Weight.: 130.0 lb/sqft
Windows Shaded..? N
Partitions Used.? N

LIGHTING
Overhead Fixture: Recessed
Lamp Wattage....: 2.00 W/sqft
Ballast Mult....: 1.25
Task Lighting...: 0.00 W/sqft

PEOPLE
Occupancy.....: 4 People
Activity Level..: Office Work
Sensible.....: 245.0 BTU/hr
Latent.....: 205.0 BTU/hr

OTHER LOADS
Equipment.....: 0.00 W/sqft
Misc. Sensible..: 0.0 BTU/hr
Misc. Latent....: 0.0 BTU/hr

SCHEDULES
Lighting....: BUILDING 642, FT DEVENS
Task Lights.: BUILDING 642, FT DEVENS
People.....: BUILDING 642, FT DEVENS
Equipment...: BUILDING 642, FT DEVENS
Misc. Sens..: BUILDING 642, FT DEVENS
Misc. Latent: BUILDING 642, FT DEVENS

INFILTRATION
Cooling.....: 0.00 CFM/sqft
Heating.....: 60.0 CFM
Typical.....: 30.0 CFM
When Fan On.? N

FLOOR
Type.....:Above Conditioned Space

WALL Exp	Gross Area (sqft)	WALL Type	WINDOW Type	WINDOW Qty	WINDOW Shade	WINDOW Type	WINDOW Qty	WINDOW Shade	Any Doors?
N	195.0	3	2	3	-	5	0	-	N

No roof or door data for this space.

No partition data for this space.

SPACE DESCRIPTION

Prepared by: NEW ENGLAND DIVISION
HAP v3.04

12-10-94
Page 1

****

GENERAL
Name.....: BLDG 642, OFFICE 209
Floor Area.....: 352.0 sqft
Building Weight.: 130.0 lb/sqft
Windows Shaded..? N
Partitions Used.? N

LIGHTING
Overhead Fixture: Recessed
Lamp Wattage....: 2.00 W/sqft
Ballast Mult....: 1.25
Task Lighting...: 0.00 W/sqft

PEOPLE
Occupancy.....: 4 People
Activity Level..: Office Work
Sensible.....: 245.0 BTU/hr
Latent.....: 205.0 BTU/hr

OTHER LOADS
Equipment.....: 0.00 W/sqft
Misc. Sensible..: 0.0 BTU/hr
Misc. Latent....: 0.0 BTU/hr

SCHEDULES
Lighting....: BUILDING 642, FT DEVENS
Task Lights.: BUILDING 642, FT DEVENS
People.....: BUILDING 642, FT DEVENS
Equipment...: BUILDING 642, FT DEVENS
Misc. Sens..: BUILDING 642, FT DEVENS
Misc. Latent: BUILDING 642, FT DEVENS

INFILTRATION
Cooling.....: 0.00 CFM/sqft
Heating.....: 60.0 CFM
Typical.....: 30.0 CFM
When Fan On.? N

FLOOR
Type.....:Above Conditioned Space

WALL Exp	Gross Area (sqft)	WALL Type	WINDOW Type	WINDOW Qty	WINDOW Shade	WINDOW Type	WINDOW Qty	WINDOW Shade	Any Doors?
E	195.0	3	2	0	-	5	0	-	N
N	195.0	3	2	3	-	5	0	-	N

No roof or door data for this space.

No partition data for this space.

SPACE DESCRIPTION

Prepared by: NEW ENGLAND DIVISION 12-10-94

HAP v3.04 Page 1

****

GENERAL

Name.....: BLDG 642, OFFICE 210
Floor Area.....: 235.0 sqft
Building Weight.: 130.0 lb/sqft
Windows Shaded..? N
Partitions Used.? N

LIGHTING

Overhead Fixture: Recessed
Lamp Wattage....: 2.00 W/sqft
Ballast Mult....: 1.25
Task Lighting...: 0.00 W/sqft

PEOPLE

Occupancy.....: 3 People
Activity Level..: Office Work
Sensible.....: 245.0 BTU/hr
Latent.....: 205.0 BTU/hr

OTHER LOADS

Equipment.....: 0.00 W/sqft
Misc. Sensible..: 0.0 BTU/hr
Misc. Latent....: 0.0 BTU/hr

SCHEDULES

Lighting....: BUILDING 642, FT DEVENS
Task Lights.: BUILDING 642, FT DEVENS
People.....: BUILDING 642, FT DEVENS
Equipment...: BUILDING 642, FT DEVENS
Misc. Sens..: BUILDING 642, FT DEVENS
Misc. Latent: BUILDING 642, FT DEVENS

INFILTRATION

Cooling.....: 0.00 CFM/sqft
Heating.....: 40.0 CFM
Typical.....: 20.0 CFM
When Fan On.? N

FLOOR

Type.....:Above Conditioned Space

WALL Exp	Gross Area (sqft)	WALL Type	WINDOW Type	WINDOW Qty	WINDOW Shade	WINDOW Type	WINDOW Qty	WINDOW Shade	Any Doors?
S	130.0	3	2	2	-	5	0	-	N
E	140.0	3	2	0	-	5	0	-	N

No roof or door data for this space.

No partition data for this space.

SPACE DESCRIPTION

Prepared by: NEW ENGLAND DIVISION 12-10-94

HAP v3.04 Page 1

****

GENERAL

Name.....: BLDG 642, OFF 211 & 212

Floor Area.....: 173.0 sqft

Building Weight.: 130.0 lb/sqft

Windows Shaded..? N

Partitions Used.? N

LIGHTING

Overhead Fixture: Recessed

Lamp Wattage....: 2.00 W/sqft

Ballast Mult....: 1.25

Task Lighting...: 0.00 W/sqft

PEOPLE

Occupancy.....: 2 People

Activity Level..: Office Work

Sensible.....: 245.0 BTU/hr

Latent.....: 205.0 BTU/hr

OTHER LOADS

Equipment.....: 0.00 W/sqft

Misc. Sensible..: 0.0 BTU/hr

Misc. Latent....: 0.0 BTU/hr

SCHEDULES

Lighting....: BUILDING 642, FT DEVENS

Task Lights.: BUILDING 642, FT DEVENS

People.....: BUILDING 642, FT DEVENS

Equipment...: BUILDING 642, FT DEVENS

Misc. Sens..: BUILDING 642, FT DEVENS

Misc. Latent: BUILDING 642, FT DEVENS

INFILTRATION

Cooling.....: 0.00 CFM/sqft

Heating.....: 40.0 CFM

Typical.....: 20.0 CFM

When Fan On.? N

FLOOR

Type.....:Above Conditioned Space

WALL Exp	Gross Area (sqft)	WALL Type	WINDOW Type	WINDOW Qty	WINDOW Shade	WINDOW Type	WINDOW Qty	WINDOW Shade	Any Doors?
S	130.0	3	2	2	-	5	0	-	N

No roof or door data for this space.

No partition data for this space.

SPACE DESCRIPTION

Prepared by: NEW ENGLAND DIVISION
HAP v3.04

12-10-94
Page 1

****

GENERAL
Name.....: BLDG 642, OFFICE 213
Floor Area.....: 247.0 sqft
Building Weight.: 130.0 lb/sqft
Windows Shaded..? N
Partitions Used.? N

LIGHTING
Overhead Fixture: Recessed
Lamp Wattage....: 2.00 W/sqft
Ballast Mult....: 1.25
Task Lighting...: 0.00 W/sqft

PEOPLE
Occupancy.....: 3 People
Activity Level..: Office Work
Sensible.....: 245.0 BTU/hr
Latent.....: 205.0 BTU/hr

OTHER LOADS
Equipment.....: 0.00 W/sqft
Misc. Sensible..: 0.0 BTU/hr
Misc. Latent....: 0.0 BTU/hr

SCHEDULES
Lighting....: BUILDING 642, FT DEVENS
Task Lights.: BUILDING 642, FT DEVENS
People.....: BUILDING 642, FT DEVENS
Equipment...: BUILDING 642, FT DEVENS
Misc. Sens..: BUILDING 642, FT DEVENS
Misc. Latent: BUILDING 642, FT DEVENS

INFILTRATION
Cooling.....: 0.00 CFM/sqft
Heating.....: 20.0 CFM
Typical.....: 10.0 CFM
When Fan On.? N

FLOOR
Type.....:Above Conditioned Space

WALL Exp	Gross Area (sqft)	WALL Type	WINDOW Type	WINDOW Qty	WINDOW Shade	WINDOW Type	WINDOW Qty	WINDOW Shade	Any Doors?
S	50.0	3	2	1	-	5	0	-	N

No roof or door data for this space.

No partition data for this space.

SPACE DESCRIPTION

Prepared by: NEW ENGLAND DIVISION 12-10-94

HAP v3.04 Page 1

****

GENERAL

Name.....: BLDG 642, REST 216 & 224
Floor Area.....: 624.0 sqft
Building Weight.: 130.0 lb/sqft
Windows Shaded..? N
Partitions Used.? N

LIGHTING

Overhead Fixture: Recessed
Lamp Wattage....: 2.00 W/sqft
Ballast Mult....: 1.25
Task Lighting...: 0.00 W/sqft

PEOPLE

Occupancy.....: 0 People
Activity Level..: Office Work
Sensible.....: 245.0 BTU/hr
Latent.....: 205.0 BTU/hr

OTHER LOADS

Equipment.....: 0.00 W/sqft
Misc. Sensible..: 0.0 BTU/hr
Misc. Latent....: 0.0 BTU/hr

SCHEDULES

Lighting....: BUILDING 642, FT DEVENS
Task Lights.: BUILDING 642, FT DEVENS
People.....: BUILDING 642, FT DEVENS
Equipment...: BUILDING 642, FT DEVENS
Misc. Sens..: BUILDING 642, FT DEVENS
Misc. Latent: BUILDING 642, FT DEVENS

INFILTRATION

Cooling.....: 0.00 CFM/sqft
Heating.....: 100.0 CFM
Typical.....: 50.0 CFM
When Fan On.? N

FLOOR

Type.....:Above Conditioned Space

WALL Exp	Gross Area (sqft)	WALL Type	WINDOW Type	WINDOW Qty	WINDOW Shade	WINDOW Type	WINDOW Qty	WINDOW Shade	Any Doors?
E	480.0	3	2	5	-	5	0	-	N

No roof or door data for this space.

No partition data for this space.

SPACE DESCRIPTION

Prepared by: NEW ENGLAND DIVISION
HAP v3.04

12-10-94
Page 1

****

GENERAL
Name.....: BLDG 642, OFF 218 & 222
Floor Area.....: 125.0 sqft
Building Weight.: 130.0 lb/sqft
Windows Shaded..? N
Partitions Used.? N

LIGHTING
Overhead Fixture: Recessed
Lamp Wattage....: 2.00 W/sqft
Ballast Mult....: 1.25
Task Lighting...: 0.00 W/sqft

PEOPLE
Occupancy.....: 2 People
Activity Level..: Office Work
Sensible.....: 245.0 BTU/hr
Latent.....: 205.0 BTU/hr

OTHER LOADS
Equipment.....: 0.00 W/sqft
Misc. Sensible..: 0.0 BTU/hr
Misc. Latent....: 0.0 BTU/hr

SCHEDULES
Lighting....: BUILDING 642, FT DEVENS
Task Lights.: BUILDING 642, FT DEVENS
People.....: BUILDING 642, FT DEVENS
Equipment...: BUILDING 642, FT DEVENS
Misc. Sens..: BUILDING 642, FT DEVENS
Misc. Latent: BUILDING 642, FT DEVENS

INFILTRATION
Cooling.....: 0.00 CFM/sqft
Heating.....: 20.0 CFM
Typical.....: 10.0 CFM
When Fan On.? N

FLOOR
Type.....:Above Conditioned Space

WALL Exp	Gross Area (sqft)	WALL Type	WINDOW Type	WINDOW Qty	WINDOW Shade	WINDOW Type	WINDOW Qty	WINDOW Shade	Any Doors?
E	110.0	3	2	1	-	5	0	-	N

No roof or door data for this space.

No partition data for this space.

SPACE DESCRIPTION

Prepared by: NEW ENGLAND DIVISION
HAP v3.04

12-10-94
Page 1

****

GENERAL
- Name.....: BLDG 642, OFFICE 219
- Floor Area.....: 987.0 sqft
- Building Weight.: 130.0 lb/sqft
- Windows Shaded..? N
- Partitions Used.? Y

LIGHTING
- Overhead Fixture: Recessed
- Lamp Wattage....: 2.00 W/sqft
- Ballast Mult....: 1.25
- Task Lighting...: 0.00 W/sqft

PEOPLE
- Occupancy.....: 10 People
- Activity Level..: Office Work
- Sensible.....: 245.0 BTU/hr
- Latent.....: 205.0 BTU/hr

OTHER LOADS
- Equipment.....: 0.00 W/sqft
- Misc. Sensible..: 0.0 BTU/hr
- Misc. Latent....: 0.0 BTU/hr

SCHEDULES
- Lighting....: BUILDING 642, FT DEVENS
- Task Lights.: BUILDING 642, FT DEVENS
- People.....: BUILDING 642, FT DEVENS
- Equipment...: BUILDING 642, FT DEVENS
- Misc. Sens..: BUILDING 642, FT DEVENS
- Misc. Latent: BUILDING 642, FT DEVENS

INFILTRATION
- Cooling.....: 0.00 CFM/sqft
- Heating.....: 380.0 CFM
- Typical.....: 190.0 CFM
- When Fan On.? N

FLOOR
- Type.....:Above Conditioned Space

WALL Exp	Gross Area (sqft)	WALL Type	WINDOW Type	WINDOW Qty	WINDOW Shade	WINDOW Type	WINDOW Qty	WINDOW Shade	Any Doors?
N	400.0	3	2	4	-	5	3	-	Y
E	80.0	3	2	0	-	5	1	-	N

ROOF Exp	Slope (deg)	Gross Area (sqft)	ROOF Type	SKYLIGHT Type	SKYLIGHT Qty
-	-	-	-	-	-
-	-	-	-	-	-
-	-	-	-	-	-
-	-	-	-	-	-

DOOR
- Gross Area..: 20.1 sqft
- Uvalue.....: 0.300
- Glass Area..: 0.0 sqft
- Glass U-val.: 0.500
- Shade Coeff.: 1.00
- Glass Shaded? N

PARTITION LOADS	Type 1	Type 2
Type.....	Partition	Ceiling
Area.....	110.0 sqft	0.0 sqft
U-value.....	1.000 BTU/hr/sqft/F	0.500 BTU/hr/sqft/F
Maximum Space Temp....:	90.0 F	75.0 F
Outside Air Temp @ Max:	85.0 F	55.0 F
Minimum Space Temp....:	50.0 F	75.0 F
Outside Air Temp @ Min:	0.0 F	54.0 F

SPACE DESCRIPTION

Prepared by: NEW ENGLAND DIVISION
HAP v3.04

12-10-94
Page 1

****

GENERAL
Name.....: BLDG 642, OFFICE 221
Floor Area.....: 987.0 sqft
Building Weight.: 130.0 lb/sqft
Windows Shaded..? N
Partitions Used.? N

LIGHTING
Overhead Fixture: Recessed
Lamp Wattage....: 2.00 W/sqft
Ballast Mult....: 1.25
Task Lighting...: 0.00 W/sqft

PEOPLE
Occupancy.....: 10 People
Activity Level..: Office Work
Sensible.....: 245.0 BTU/hr
Latent.....: 205.0 BTU/hr

OTHER LOADS
Equipment.....: 0.00 W/sqft
Misc. Sensible..: 0.0 BTU/hr
Misc. Latent....: 0.0 BTU/hr

SCHEDULES
Lighting....: BUILDING 642, FT DEVENS
Task Lights.: BUILDING 642, FT DEVENS
People.....: BUILDING 642, FT DEVENS
Equipment...: BUILDING 642, FT DEVENS
Misc. Sens..: BUILDING 642, FT DEVENS
Misc. Latent: BUILDING 642, FT DEVENS

INFILTRATION
Cooling.....: 0.00 CFM/sqft
Heating.....: 380.0 CFM
Typical.....: 190.0 CFM
When Fan On.? N

FLOOR
Type.....:Above Conditioned Space

WALL Exp	Gross Area (sqft)	WALL Type	WINDOW Type	WINDOW Qty	WINDOW Shade	WINDOW Type	WINDOW Qty	WINDOW Shade	Any Doors?
S	400.0	3	2	4	-	5	4	-	N
E	195.0	3	2	2	-	5	1	-	Y

ROOF Exp	Slope (deg)	Gross Area (sqft)	ROOF Type	SKYLIGHT Type	SKYLIGHT Qty
-	-	-	-	-	-
-	-	-	-	-	-
-	-	-	-	-	-
-	-	-	-	-	-

DOOR
Gross Area..: 20.1 sqft
Uvalue.....: 0.300
Glass Area..: 0.0 sqft
Glass U-val.: 0.500
Shade Coeff.: 1.00
Glass Shaded? N

No partition data for this space.

SPACE DESCRIPTION

Prepared by: NEW ENGLAND DIVISION 12-10-94

HAP v3.04 Page 1

****

GENERAL

Name.....: BLDG 642, OFFICE 228
Floor Area.....: 232.0 sqft
Building Weight.: 130.0 lb/sqft
Windows Shaded..? N
Partitions Used.? N

LIGHTING

Overhead Fixture: Recessed
Lamp Wattage....: 2.00 W/sqft
Ballast Mult....: 1.25
Task Lighting...: 0.00 W/sqft

PEOPLE

Occupancy.....: 3 People
Activity Level..: Office Work
Sensible.....: 245.0 BTU/hr
Latent.....: 205.0 BTU/hr

OTHER LOADS

Equipment.....: 0.00 W/sqft
Misc. Sensible..: 0.0 BTU/hr
Misc. Latent....: 0.0 BTU/hr

SCHEDULES

Lighting....: BUILDING 642, FT DEVENS
Task Lights.: BUILDING 642, FT DEVENS
People.....: BUILDING 642, FT DEVENS
Equipment...: BUILDING 642, FT DEVENS
Misc. Sens..: BUILDING 642, FT DEVENS
Misc. Latent: BUILDING 642, FT DEVENS

INFILTRATION

Cooling.....: 0.00 CFM/sqft
Heating.....: 60.0 CFM
Typical.....: 30.0 CFM
When Fan On.? N

FLOOR

Type.....:Above Conditioned Space

WALL Exp	Gross Area (sqft)	WALL Type	WINDOW Type	WINDOW Qty	WINDOW Shade	WINDOW Type	WINDOW Qty	WINDOW Shade	Any Doors?
N	215.0	3	2	3	-	5	0	-	N

No roof or door data for this space.

No partition data for this space.

SPACE DESCRIPTION

Prepared by: NEW ENGLAND DIVISION

HAP v3.04

****

GENERAL
- Name.....: BLDG 642, OFFICE 231
- Floor Area.....: 229.0 sqft
- Building Weight.: 130.0 lb/sqft
- Windows Shaded..? N
- Partitions Used.? N

LIGHTING
- Overhead Fixture: Recessed
- Lamp Wattage....: 2.00 W/sqft
- Ballast Mult....: 1.25
- Task Lighting...: 0.00 W/sqft

PEOPLE
- Occupancy.....: 3 People
- Activity Level..: Office Work
- Sensible.....: 245.0 BTU/hr
- Latent.....: 205.0 BTU/hr

OTHER LOADS
- Equipment.....: 0.00 W/sqft
- Misc. Sensible..: 0.0 BTU/hr
- Misc. Latent....: 0.0 BTU/hr

SCHEDULES
- Lighting....: BUILDING 642, FT DEVENS
- Task Lights.: BUILDING 642, FT DEVENS
- People.....: BUILDING 642, FT DEVENS
- Equipment...: BUILDING 642, FT DEVENS
- Misc. Sens..: BUILDING 642, FT DEVENS
- Misc. Latent: BUILDING 642, FT DEVENS

INFILTRATION
- Cooling.....: 0.00 CFM/sqft
- Heating.....: 60.0 CFM
- Typical.....: 30.0 CFM
- When Fan On.? N

FLOOR
- Type.....:Above Conditioned Space

WALL Exp	Gross Area (sqft)	WALL Type	WINDOW Type	WINDOW Qty	WINDOW Shade	WINDOW Type	WINDOW Qty	WINDOW Shade	Any Doors?
N	215.0	3	2	3	-	5	0	-	N
E	140.0	3	2	0	-	5	0	-	N

No roof or door data for this space.

No partition data for this space.

SPACE DESCRIPTION

Prepared by: NEW ENGLAND DIVISION 12-10-94

HAP v3.04 Page 1

****

GENERAL

Name.....: BLDG 642, OFFICE 232
Floor Area.....: 235.0 sqft
Building Weight.: 130.0 lb/sqft
Windows Shaded..? N
Partitions Used.? N

LIGHTING

Overhead Fixture: Recessed
Lamp Wattage....: 2.00 W/sqft
Ballast Mult....: 1.25
Task Lighting...: 0.00 W/sqft

PEOPLE

Occupancy.....: 3 People
Activity Level..: Office Work
Sensible.....: 245.0 BTU/hr
Latent.....: 205.0 BTU/hr

OTHER LOADS

Equipment.....: 0.00 W/sqft
Misc. Sensible..: 0.0 BTU/hr
Misc. Latent....: 0.0 BTU/hr

SCHEDULES

Lighting....: BUILDING 642, FT DEVENS
Task Lights.: BUILDING 642, FT DEVENS
People.....: BUILDING 642, FT DEVENS
Equipment...: BUILDING 642, FT DEVENS
Misc. Sens..: BUILDING 642, FT DEVENS
Misc. Latent: BUILDING 642, FT DEVENS

INFILTRATION

Cooling.....: 0.00 CFM/sqft
Heating.....: 40.0 CFM
Typical.....: 20.0 CFM
When Fan On.? N

FLOOR

Type.....:Above Conditioned Space

WALL Exp	Gross Area (sqft)	WALL Type	WINDOW Type	WINDOW Qty	WINDOW Shade	WINDOW Type	WINDOW Qty	WINDOW Shade	Any Doors?
S	130.0	3	2	2	-	5	0	-	N
E	195.0	3	2	0	-	5	0	-	N

No roof or door data for this space.

No partition data for this space.

SPACE DESCRIPTION

Prepared by: NEW ENGLAND DIVISION
HAP v3.04

12-10-94
Page 1

****

GENERAL
Name.....: 642, 234, 238, 239 & 243
Floor Area.....: 218.0 sqft
Building Weight.: 130.0 lb/sqft
Windows Shaded..? N
Partitions Used.? N

LIGHTING
Overhead Fixture: Recessed
Lamp Wattage....: 2.00 W/sqft
Ballast Mult....: 1.25
Task Lighting...: 0.00 W/sqft

PEOPLE
Occupancy.....: 3 People
Activity Level..: Office Work
Sensible.....: 245.0 BTU/hr
Latent.....: 205.0 BTU/hr

OTHER LOADS
Equipment.....: 0.00 W/sqft
Misc. Sensible..: 0.0 BTU/hr
Misc. Latent....: 0.0 BTU/hr

SCHEDULES
Lighting....: BUILDING 642, FT DEVENS
Task Lights.: BUILDING 642, FT DEVENS
People.....: BUILDING 642, FT DEVENS
Equipment...: BUILDING 642, FT DEVENS
Misc. Sens..: BUILDING 642, FT DEVENS
Misc. Latent: BUILDING 642, FT DEVENS

INFILTRATION
Cooling.....: 0.00 CFM/sqft
Heating.....: 40.0 CFM
Typical.....: 20.0 CFM
When Fan On.? N

FLOOR
Type.....:Above Conditioned Space

WALL Exp	Gross Area (sqft)	WALL Type	WINDOW Type	WINDOW Qty	WINDOW Shade	WINDOW Type	WINDOW Qty	WINDOW Shade	Any Doors?
S	137.0	3	2	2	-	5	0	-	N

No roof or door data for this space.

No partition data for this space.

SPACE DESCRIPTION

Prepared by: NEW ENGLAND DIVISION 12-10-94

HAP v3.04 Page 1

****

GENERAL

Name.....: BLDG 642, OFF 235 & 242
Floor Area.....: 236.0 sqft
Building Weight.: 130.0 lb/sqft
Windows Shaded..? N
Partitions Used.? N

LIGHTING

Overhead Fixture: Recessed
Lamp Wattage....: 2.00 W/sqft
Ballast Mult....: 1.25
Task Lighting...: 0.00 W/sqft

PEOPLE

Occupancy.....: 3 People
Activity Level..: Office Work
Sensible.....: 245.0 BTU/hr
Latent.....: 205.0 BTU/hr

OTHER LOADS

Equipment.....: 0.00 W/sqft
Misc. Sensible..: 0.0 BTU/hr
Misc. Latent....: 0.0 BTU/hr

SCHEDULES

Lighting....: BUILDING 642, FT DEVENS
Task Lights.: BUILDING 642, FT DEVENS
People.....: BUILDING 642, FT DEVENS
Equipment...: BUILDING 642, FT DEVENS
Misc. Sens..: BUILDING 642, FT DEVENS
Misc. Latent: BUILDING 642, FT DEVENS

INFILTRATION

Cooling.....: 0.00 CFM/sqft
Heating.....: 60.0 CFM
Typical.....: 30.0 CFM
When Fan On.? N

FLOOR

Type.....:Above Conditioned Space

WALL Exp	Gross Area (sqft)	WALL Type	WINDOW Type	WINDOW Qty	WINDOW Shade	WINDOW Type	WINDOW Qty	WINDOW Shade	Any Doors?
S	175.0	3	2	3	-	5	0	-	N

No roof or door data for this space.

No partition data for this space.

SPACE DESCRIPTION

Prepared by: NEW ENGLAND DIVISION 12-10-94

HAP v3.04 Page 1

****

GENERAL
- Name.....: BLDG 642, OFFICE 245
- Floor Area.....: 235.0 sqft
- Building Weight.: 130.0 lb/sqft
- Windows Shaded..? N
- Partitions Used.? N

LIGHTING
- Overhead Fixture: Recessed
- Lamp Wattage....: 2.00 W/sqft
- Ballast Mult....: 1.25
- Task Lighting...: 0.00 W/sqft

PEOPLE
- Occupancy.....: 3 People
- Activity Level..: Office Work
- Sensible.....: 245.0 BTU/hr
- Latent.....: 205.0 BTU/hr

OTHER LOADS
- Equipment.....: 0.00 W/sqft
- Misc. Sensible..: 0.0 BTU/hr
- Misc. Latent....: 0.0 BTU/hr

SCHEDULES
- Lighting....: BUILDING 642, FT DEVENS
- Task Lights.: BUILDING 642, FT DEVENS
- People.....: BUILDING 642, FT DEVENS
- Equipment...: BUILDING 642, FT DEVENS
- Misc. Sens..: BUILDING 642, FT DEVENS
- Misc. Latent: BUILDING 642, FT DEVENS

INFILTRATION
- Cooling.....: 0.00 CFM/sqft
- Heating.....: 40.0 CFM
- Typical.....: 20.0 CFM
- When Fan On.? N

FLOOR
- Type.....:Above Conditioned Space

WALL Exp	Gross Area (sqft)	WALL Type	WINDOW Type	WINDOW Qty	WINDOW Shade	WINDOW Type	WINDOW Qty	WINDOW Shade	Any Doors?
S	138.0	3	2	2	-	5	0	-	N
W	195.0	3	2	0	-	5	0	-	N

No roof or door data for this space.

No partition data for this space.

SPACE DESCRIPTION

Prepared by: NEW ENGLAND DIVISION
HAP v3.04

****

GENERAL
- Name.....: BLDG 642, OFFICE 246
- Floor Area.....: 227.0 sqft
- Building Weight.: 130.0 lb/sqft
- Windows Shaded..? N
- Partitions Used.? N

LIGHTING
- Overhead Fixture: Recessed
- Lamp Wattage....: 2.00 W/sqft
- Ballast Mult....: 1.25
- Task Lighting...: 0.00 W/sqft

PEOPLE
- Occupancy.....: 3 People
- Activity Level..: Office Work
- Sensible.....: 245.0 BTU/hr
- Latent.....: 205.0 BTU/hr

OTHER LOADS
- Equipment.....: 0.00 W/sqft
- Misc. Sensible..: 0.0 BTU/hr
- Misc. Latent....: 0.0 BTU/hr

SCHEDULES
- Lighting....: BUILDING 642, FT DEVENS
- Task Lights.: BUILDING 642, FT DEVENS
- People.....: BUILDING 642, FT DEVENS
- Equipment...: BUILDING 642, FT DEVENS
- Misc. Sens..: BUILDING 642, FT DEVENS
- Misc. Latent: BUILDING 642, FT DEVENS

INFILTRATION
- Cooling.....: 0.00 CFM/sqft
- Heating.....: 60.0 CFM
- Typical.....: 30.0 CFM
- When Fan On.? N

FLOOR
- Type.....:Above Conditioned Space

WALL Exp	Gross Area (sqft)	WALL Type	WINDOW Type	WINDOW Qty	WINDOW Shade	WINDOW Type	WINDOW Qty	WINDOW Shade	Any Doors?
N	213.0	3	2	3	-	5	0	-	N
W	140.0	3	2	0	-	5	0	-	N

No roof or door data for this space.

No partition data for this space.

SPACE DESCRIPTION

Prepared by: NEW ENGLAND DIVISION
HAP v3.04

12-10-94
Page 1

****

GENERAL
Name.....: BLDG 642, OFFICE 249
Floor Area.....: 175.0 sqft
Building Weight.: 130.0 lb/sqft
Windows Shaded..? N
Partitions Used.? N

LIGHTING
Overhead Fixture: Recessed
Lamp Wattage....: 2.00 W/sqft
Ballast Mult....: 1.25
Task Lighting...: 0.00 W/sqft

PEOPLE
Occupancy.....: 2 People
Activity Level..: Office Work
Sensible.....: 245.0 BTU/hr
Latent.....: 205.0 BTU/hr

OTHER LOADS
Equipment.....: 0.00 W/sqft
Misc. Sensible..: 0.0 BTU/hr
Misc. Latent....: 0.0 BTU/hr

SCHEDULES
Lighting....: BUILDING 642, FT DEVENS
Task Lights.: BUILDING 642, FT DEVENS
People.....: BUILDING 642, FT DEVENS
Equipment...: BUILDING 642, FT DEVENS
Misc. Sens..: BUILDING 642, FT DEVENS
Misc. Latent: BUILDING 642, FT DEVENS

INFILTRATION
Cooling.....: 0.00 CFM/sqft
Heating.....: 60.0 CFM
Typical.....: 30.0 CFM
When Fan On.? N

FLOOR
Type.....:Above Conditioned Space

WALL Exp	Gross Area (sqft)	WALL Type	WINDOW Type	WINDOW Qty	WINDOW Shade	WINDOW Type	WINDOW Qty	WINDOW Shade	Any Doors?
N	173.0	3	2	3	-	5	0	-	N

No roof or door data for this space.

No partition data for this space.

SPACE DESCRIPTION

Prepared by: NEW ENGLAND DIVISION 12-10-94

HAP v3.04 Page 1

****

GENERAL

Name.....: BLDG 642, OFFICE 251

Floor Area.....: 293.0 sqft

Building Weight.: 130.0 lb/sqft

Windows Shaded..? N

Partitions Used.? N

LIGHTING

Overhead Fixture: Recessed

Lamp Wattage....: 2.00 W/sqft

Ballast Mult....: 1.25

Task Lighting...: 0.00 W/sqft

PEOPLE

Occupancy.....: 4 People

Activity Level..: Office Work

Sensible.....: 245.0 BTU/hr

Latent.....: 205.0 BTU/hr

OTHER LOADS

Equipment.....: 0.00 W/sqft

Misc. Sensible..: 0.0 BTU/hr

Misc. Latent....: 0.0 BTU/hr

SCHEDULES

Lighting....: BUILDING 642, FT DEVENS

Task Lights.: BUILDING 642, FT DEVENS

People.....: BUILDING 642, FT DEVENS

Equipment...: BUILDING 642, FT DEVENS

Misc. Sens..: BUILDING 642, FT DEVENS

Misc. Latent: BUILDING 642, FT DEVENS

INFILTRATION

Cooling.....: 0.00 CFM/sqft

Heating.....: 60.0 CFM

Typical.....: 30.0 CFM

When Fan On.? N

FLOOR

Type.....:Above Conditioned Space

WALL Exp	Gross Area (sqft)	WALL Type	WINDOW Type	WINDOW Qty	WINDOW Shade	WINDOW Type	WINDOW Qty	WINDOW Shade	Any Doors?
W	240.0	3	2	2	-	5	1	-	N

No roof or door data for this space.

No partition data for this space.

SPACE DESCRIPTION

Prepared by: NEW ENGLAND DIVISION
HAP v3.04

12-10-94
Page 1

****

GENERAL
Name.....: BLDG 642, OFFICE 252
Floor Area.....: 297.0 sqft
Building Weight.: 130.0 lb/sqft
Windows Shaded..? N
Partitions Used.? N

LIGHTING
Overhead Fixture: Recessed
Lamp Wattage....: 2.00 W/sqft
Ballast Mult....: 1.25
Task Lighting...: 0.00 W/sqft

PEOPLE
Occupancy.....: 4 People
Activity Level..: Office Work
Sensible.....: 245.0 BTU/hr
Latent.....: 205.0 BTU/hr

OTHER LOADS
Equipment.....: 0.00 W/sqft
Misc. Sensible..: 0.0 BTU/hr
Misc. Latent....: 0.0 BTU/hr

SCHEDULES
Lighting....: BUILDING 642, FT DEVENS
Task Lights.: BUILDING 642, FT DEVENS
People.....: BUILDING 642, FT DEVENS
Equipment...: BUILDING 642, FT DEVENS
Misc. Sens..: BUILDING 642, FT DEVENS
Misc. Latent: BUILDING 642, FT DEVENS

INFILTRATION
Cooling.....: 0.00 CFM/sqft
Heating.....: 80.0 CFM
Typical.....: 40.0 CFM
When Fan On.? N

FLOOR
Type.....:Above Conditioned Space

WALL Exp	Gross Area (sqft)	WALL Type	WINDOW Type	WINDOW Qty	WINDOW Shade	WINDOW Type	WINDOW Qty	WINDOW Shade	Any Doors?
W	255.0	3	2	4	-	5	0	-	N

No roof or door data for this space.

No partition data for this space.

SPACE DESCRIPTION

Prepared by: NEW ENGLAND DIVISION 12-10-94

HAP v3.04 Page 1

****

GENERAL

Name.....: BLDG 642, OFF 253 & 254
Floor Area.....: 266.0 sqft
Building Weight.: 130.0 lb/sqft
Windows Shaded..? N
Partitions Used.? N

LIGHTING

Overhead Fixture: Recessed
Lamp Wattage....: 2.00 W/sqft
Ballast Mult....: 1.25
Task Lighting...: 0.00 W/sqft

PEOPLE

Occupancy.....: 3 People
Activity Level..: Office Work
Sensible.....: 245.0 BTU/hr
Latent.....: 205.0 BTU/hr

OTHER LOADS

Equipment.....: 0.00 W/sqft
Misc. Sensible..: 0.0 BTU/hr
Misc. Latent....: 0.0 BTU/hr

SCHEDULES

Lighting....: BUILDING 642, FT DEVENS
Task Lights.: BUILDING 642, FT DEVENS
People.....: BUILDING 642, FT DEVENS
Equipment...: BUILDING 642, FT DEVENS
Misc. Sens..: BUILDING 642, FT DEVENS
Misc. Latent: BUILDING 642, FT DEVENS

INFILTRATION

Cooling.....: 0.00 CFM/sqft
Heating.....: 60.0 CFM
Typical.....: 30.0 CFM
When Fan On.? N

FLOOR

Type.....:Above Conditioned Space

WALL Exp	Gross Area (sqft)	WALL Type	WINDOW Type	WINDOW Qty	WINDOW Shade	WINDOW Type	WINDOW Qty	WINDOW Shade	Any Doors?
W	190.0	3	2	3	-	5	0	-	N

No roof or door data for this space.

No partition data for this space.

SPACE DESCRIPTION

Prepared by: NEW ENGLAND DIVISION
HAP v3.04

12-10-94
Page 1

****

GENERAL
Name.....: BLDG 642, OFFICE 255
Floor Area.....: 343.0 sqft
Building Weight.: 130.0 lb/sqft
Windows Shaded..? N
Partitions Used.? N

LIGHTING
Overhead Fixture: Recessed
Lamp Wattage....: 2.00 W/sqft
Ballast Mult....: 1.25
Task Lighting...: 0.00 W/sqft

PEOPLE
Occupancy.....: 4 People
Activity Level..: Office Work
Sensible.....: 245.0 BTU/hr
Latent.....: 205.0 BTU/hr

OTHER LOADS
Equipment.....: 0.00 W/sqft
Misc. Sensible..: 0.0 BTU/hr
Misc. Latent....: 0.0 BTU/hr

SCHEDULES
Lighting....: BUILDING 642, FT DEVENS
Task Lights.: BUILDING 642, FT DEVENS
People.....: BUILDING 642, FT DEVENS
Equipment...: BUILDING 642, FT DEVENS
Misc. Sens..: BUILDING 642, FT DEVENS
Misc. Latent: BUILDING 642, FT DEVENS

INFILTRATION
Cooling.....: 0.00 CFM/sqft
Heating.....: 80.0 CFM
Typical.....: 40.0 CFM
When Fan On.? N

FLOOR
Type.....:Above Conditioned Space

WALL Exp	Gross Area (sqft)	WALL Type	WINDOW Type	WINDOW Qty	WINDOW Shade	WINDOW Type	WINDOW Qty	WINDOW Shade	Any Doors?
W	258.0	3	2	4	-	5	0	-	N

No roof or door data for this space.

No partition data for this space.

SPACE DESCRIPTION

Prepared by: NEW ENGLAND DIVISION 12-10-94

HAP v3.04 Page 1

****

GENERAL

Name.....: BLDG 642, OFFICE 256
Floor Area.....: 317.0 sqft
Building Weight.: 130.0 lb/sqft
Windows Shaded..? N
Partitions Used.? N

LIGHTING

Overhead Fixture: Recessed
Lamp Wattage....: 2.00 W/sqft
Ballast Mult....: 1.25
Task Lighting...: 0.00 W/sqft

PEOPLE

Occupancy.....: 4 People
Activity Level..: Office Work
Sensible.....: 245.0 BTU/hr
Latent.....: 205.0 BTU/hr

OTHER LOADS

Equipment.....: 0.00 W/sqft
Misc. Sensible..: 0.0 BTU/hr
Misc. Latent....: 0.0 BTU/hr

SCHEDULES

Lighting....: BUILDING 642, FT DEVENS
Task Lights.: BUILDING 642, FT DEVENS
People.....: BUILDING 642, FT DEVENS
Equipment...: BUILDING 642, FT DEVENS
Misc. Sens..: BUILDING 642, FT DEVENS
Misc. Latent: BUILDING 642, FT DEVENS

INFILTRATION

Cooling.....: 0.00 CFM/sqft
Heating.....: 60.0 CFM
Typical.....: 30.0 CFM
When Fan On.? N

FLOOR

Type.....:Above Conditioned Space

WALL Exp	Gross Area (sqft)	WALL Type	WINDOW Type	WINDOW Qty	WINDOW Shade	WINDOW Type	WINDOW Qty	WINDOW Shade	Any Doors?
W	195.0	3	2	2	-	5	1	-	N

No roof or door data for this space.

No partition data for this space.

SPACE DESCRIPTION

Prepared by: NEW ENGLAND DIVISION 12-10-94

HAP v3.04 Page 1

****

GENERAL

Name.....: BLDG 642, TELEPHONE 257
Floor Area.....: 70.0 sqft
Building Weight.: 130.0 lb/sqft
Windows Shaded..? N
Partitions Used.? N

LIGHTING

Overhead Fixture: Recessed
Lamp Wattage....: 2.00 W/sqft
Ballast Mult....: 1.25
Task Lighting...: 0.00 W/sqft

PEOPLE

Occupancy.....: 0 People
Activity Level..: Office Work
Sensible.....: 245.0 BTU/hr
Latent.....: 205.0 BTU/hr

OTHER LOADS

Equipment.....: 0.00 W/sqft
Misc. Sensible..: 0.0 BTU/hr
Misc. Latent....: 0.0 BTU/hr

SCHEDULES

Lighting....: BUILDING 642, FT DEVENS
Task Lights.: BUILDING 642, FT DEVENS
People.....: BUILDING 642, FT DEVENS
Equipment...: BUILDING 642, FT DEVENS
Misc. Sens..: BUILDING 642, FT DEVENS
Misc. Latent: BUILDING 642, FT DEVENS

INFILTRATION

Cooling.....: 0.00 CFM/sqft
Heating.....: 0.0 CFM
Typical.....: 0.0 CFM
When Fan On.? N

FLOOR

Type.....:Above Conditioned Space

WALL Exp	Gross Area (sqft)	WALL Type	WINDOW Type	WINDOW Qty	WINDOW Shade	WINDOW Type	WINDOW Qty	WINDOW Shade	Any Doors?
W	45.0	3	2	0	-	5	0	-	N

No roof or door data for this space.

No partition data for this space.

SPACE DESCRIPTION

Prepared by: NEW ENGLAND DIVISION 12-10-94

HAP v3.04 Page 1

****

GENERAL

Name.....: BLDG 642, STAIRS S11/S12
Floor Area.....: 126.0 sqft
Building Weight.: 130.0 lb/sqft
Windows Shaded..? N
Partitions Used.? N

LIGHTING

Overhead Fixture: Recessed
Lamp Wattage....: 2.00 W/sqft
Ballast Mult....: 1.25
Task Lighting...: 0.00 W/sqft

PEOPLE

Occupancy.....: 0 People
Activity Level..: Office Work
Sensible.....: 245.0 BTU/hr
Latent.....: 205.0 BTU/hr

OTHER LOADS

Equipment.....: 0.00 W/sqft
Misc. Sensible..: 0.0 BTU/hr
Misc. Latent....: 0.0 BTU/hr

SCHEDULES

Lighting....: BUILDING 642, FT DEVENS
Task Lights.: BUILDING 642, FT DEVENS
People.....: BUILDING 642, FT DEVENS
Equipment...: BUILDING 642, FT DEVENS
Misc. Sens..: BUILDING 642, FT DEVENS
Misc. Latent: BUILDING 642, FT DEVENS

INFILTRATION

Cooling.....: 0.00 CFM/sqft
Heating.....: 20.0 CFM
Typical.....: 10.0 CFM
When Fan On.? N

FLOOR

Type.....:Above Conditioned Space

WALL Exp	Gross Area (sqft)	WALL Type	WINDOW Type	WINDOW Qty	WINDOW Shade	WINDOW Type	WINDOW Qty	WINDOW Shade	Any Doors?
W	90.0	3	3	1	-	4	0	-	N

No roof or door data for this space.

No partition data for this space.

SPACE DESCRIPTION

Prepared by: NEW ENGLAND DIVISION 12-10-94

HAP v3.04 Page 1

****

GENERAL
- Name.....: BLDG 642, C21 & C25
- Floor Area.....: 292.5 sqft
- Building Weight.: 130.0 lb/sqft
- Windows Shaded..? N
- Partitions Used.? N

LIGHTING
- Overhead Fixture: Recessed
- Lamp Wattage....: 2.00 W/sqft
- Ballast Mult....: 1.25
- Task Lighting...: 0.00 W/sqft

PEOPLE
- Occupancy.....: 0 People
- Activity Level..: Office Work
- Sensible.....: 245.0 BTU/hr
- Latent.....: 205.0 BTU/hr

OTHER LOADS
- Equipment.....: 0.00 W/sqft
- Misc. Sensible..: 0.0 BTU/hr
- Misc. Latent....: 0.0 BTU/hr

SCHEDULES
- Lighting....: BUILDING 642, FT DEVENS
- Task Lights.: BUILDING 642, FT DEVENS
- People.....: BUILDING 642, FT DEVENS
- Equipment...: BUILDING 642, FT DEVENS
- Misc. Sens..: BUILDING 642, FT DEVENS
- Misc. Latent: BUILDING 642, FT DEVENS

INFILTRATION
- Cooling.....: 0.00 CFM/sqft
- Heating.....: 40.0 CFM
- Typical.....: 20.0 CFM
- When Fan On.? N

FLOOR
- Type.....:Above Conditioned Space

WALL Exp	Gross Area (sqft)	WALL Type	WINDOW Type	WINDOW Qty	WINDOW Shade	WINDOW Type	WINDOW Qty	WINDOW Shade	Any Doors?
W	50.0	3	1	0	-	1	0	-	Y

ROOF Exp	Slope (deg)	Gross Area (sqft)	ROOF Type	SKYLIGHT Type	SKYLIGHT Qty
-	-	-	-	-	-
-	-	-	-	-	-
-	-	-	-	-	-
-	-	-	-	-	-

DOOR
- Gross Area..: 20.0 sqft
- Uvalue.....: 0.300
- Glass Area..: 0.0 sqft
- Glass U-val.: 0.500
- Shade Coeff.: 1.00
- Glass Shaded? N

No partition data for this space.

SPACE DESCRIPTION

Prepared by: NEW ENGLAND DIVISION 12-10-94

HAP v3.04 Page 1

****

GENERAL

Name.....: BLDG 642, C22 & C26
Floor Area.....: 292.5 sqft
Building Weight.: 130.0 lb/sqft
Windows Shaded..? N
Partitions Used.? N

LIGHTING

Overhead Fixture: Recessed
Lamp Wattage....: 2.00 W/sqft
Ballast Mult....: 1.25
Task Lighting...: 0.00 W/sqft

PEOPLE

Occupancy.....: 0 People
Activity Level..: Office Work
Sensible.....: 245.0 BTU/hr
Latent.....: 205.0 BTU/hr

OTHER LOADS

Equipment.....: 0.00 W/sqft
Misc. Sensible..: 0.0 BTU/hr
Misc. Latent....: 0.0 BTU/hr

SCHEDULES

Lighting....: BUILDING 642, FT DEVENS
Task Lights.: BUILDING 642, FT DEVENS
People.....: BUILDING 642, FT DEVENS
Equipment...: BUILDING 642, FT DEVENS
Misc. Sens..: BUILDING 642, FT DEVENS
Misc. Latent: BUILDING 642, FT DEVENS

INFILTRATION

Cooling.....: 0.00 CFM/sqft
Heating.....: 40.0 CFM
Typical.....: 20.0 CFM
When Fan On.? N

FLOOR

Type.....:Above Conditioned Space

WALL Exp	Gross Area (sqft)	WALL Type	WINDOW Type	WINDOW Qty	WINDOW Shade	WINDOW Type	WINDOW Qty	WINDOW Shade	Any Doors?
E	50.0	3	1	0	-	1	0	-	Y

ROOF Exp	Slope (deg)	Gross Area (sqft)	ROOF Type	SKYLIGHT Type	SKYLIGHT Qty
-	-	-	-	-	-
-	-	-	-	-	-
-	-	-	-	-	-
-	-	-	-	-	-

DOOR

Gross Area..: 20.0 sqft
Uvalue.....: 0.300
Glass Area..: 0.0 sqft
Glass U-val.: 0.500
Shade Coeff.: 1.00
Glass Shaded? N

No partition data for this space.

SPACE DESCRIPTION

Prepared by: NEW ENGLAND DIVISION 12-10-94

HAP v3.04 Page 1

****

GENERAL

Name.....: BLDG 642, C23 & C24

Floor Area.....: 465.0 sqft

Building Weight.: 130.0 lb/sqft

Windows Shaded..? N

Partitions Used.? N

LIGHTING

Overhead Fixture: Recessed

Lamp Wattage....: 2.00 W/sqft

Ballast Mult....: 1.25

Task Lighting...: 0.00 W/sqft

PEOPLE

Occupancy.....: 0 People

Activity Level..: Office Work

Sensible.....: 245.0 BTU/hr

Latent.....: 205.0 BTU/hr

OTHER LOADS

Equipment.....: 0.00 W/sqft

Misc. Sensible..: 0.0 BTU/hr

Misc. Latent....: 0.0 BTU/hr

SCHEDULES

Lighting....: BUILDING 642, FT DEVENS

Task Lights.: BUILDING 642, FT DEVENS

People.....: BUILDING 642, FT DEVENS

Equipment...: BUILDING 642, FT DEVENS

Misc. Sens..: BUILDING 642, FT DEVENS

Misc. Latent: BUILDING 642, FT DEVENS

INFILTRATION

Cooling.....: 0.00 CFM/sqft

Heating.....: 0.0 CFM

Typical.....: 0.0 CFM

When Fan On.? N

FLOOR

Type.....:Above Conditioned Space

==========

No external wall or window data for this space.

==========

No roof or door data for this space.

==========

No partition data for this space.

==========

SPACE DESCRIPTION

Prepared by: NEW ENGLAND DIVISION 12-10-94

HAP v3.04 Page 1

****

GENERAL

Name.....: BLDG 642, OFF 301 & 302

Floor Area.....: 164.0 sqft

Building Weight.: 130.0 lb/sqft

Windows Shaded..? N

Partitions Used.? N

LIGHTING

Overhead Fixture: Recessed

Lamp Wattage....: 2.00 W/sqft

Ballast Mult....: 1.25

Task Lighting...: 0.00 W/sqft

PEOPLE

Occupancy.....: 2 People

Activity Level..: Office Work

Sensible.....: 245.0 BTU/hr

Latent.....: 205.0 BTU/hr

OTHER LOADS

Equipment.....: 0.00 W/sqft

Misc. Sensible..: 0.0 BTU/hr

Misc. Latent....: 0.0 BTU/hr

SCHEDULES

Lighting....: BUILDING 642, FT DEVENS

Task Lights.: BUILDING 642, FT DEVENS

People.....: BUILDING 642, FT DEVENS

Equipment...: BUILDING 642, FT DEVENS

Misc. Sens..: BUILDING 642, FT DEVENS

Misc. Latent: BUILDING 642, FT DEVENS

INFILTRATION

Cooling.....: 0.00 CFM/sqft

Heating.....: 40.0 CFM

Typical.....: 20.0 CFM

When Fan On.? N

FLOOR

Type.....:Above Conditioned Space

WALL Exp	Gross Area (sqft)	WALL Type	WINDOW Type	WINDOW Qty	WINDOW Shade	WINDOW Type	WINDOW Qty	WINDOW Shade	Any Doors?
S	127.0	3	2	2	-	5	0	-	N

ROOF Exp	Slope (deg)	Gross Area (sqft)	ROOF Type	SKYLIGHT Type	SKYLIGHT Qty
HOR	-	166.0	2	1	0

No partition data for this space.

SPACE DESCRIPTION

Prepared by: NEW ENGLAND DIVISION
HAP v3.04

12-10-94
Page 1

****

GENERAL
Name.....: BLDG 642, OFFICE 303
Floor Area.....: 164.0 sqft
Building Weight.: 130.0 lb/sqft
Windows Shaded..? N
Partitions Used.? N

LIGHTING
Overhead Fixture: Recessed
Lamp Wattage....: 2.00 W/sqft
Ballast Mult....: 1.25
Task Lighting...: 0.00 W/sqft

PEOPLE
Occupancy.....: 2 People
Activity Level..: Office Work
Sensible.....: 245.0 BTU/hr
Latent.....: 205.0 BTU/hr

OTHER LOADS
Equipment.....: 0.00 W/sqft
Misc. Sensible..: 0.0 BTU/hr
Misc. Latent....: 0.0 BTU/hr

SCHEDULES
Lighting....: BUILDING 642, FT DEVENS
Task Lights.: BUILDING 642, FT DEVENS
People.....: BUILDING 642, FT DEVENS
Equipment...: BUILDING 642, FT DEVENS
Misc. Sens..: BUILDING 642, FT DEVENS
Misc. Latent: BUILDING 642, FT DEVENS

INFILTRATION
Cooling.....: 0.00 CFM/sqft
Heating.....: 40.0 CFM
Typical.....: 20.0 CFM
When Fan On.? N

FLOOR
Type.....:Above Conditioned Space

WALL Exp	Gross Area (sqft)	WALL Type	WINDOW Type	WINDOW Qty	WINDOW Shade	WINDOW Type	WINDOW Qty	WINDOW Shade	Any Doors?
W	140.0	3	2	0	-	5	0	-	N
S	130.0	3	2	2	-	5	0	-	N

ROOF Exp	Slope (deg)	Gross Area (sqft)	ROOF Type	SKYLIGHT Type	SKYLIGHT Qty
HOR	-	164.0	2	1	0

No partition data for this space.

SPACE DESCRIPTION

Prepared by: NEW ENGLAND DIVISION 12-10-94

HAP v3.04 Page 1

****

GENERAL

Name.....: BLDG 642, OFFICE 304
Floor Area.....: 352.0 sqft
Building Weight.: 130.0 lb/sqft
Windows Shaded..? N
Partitions Used.? N

LIGHTING

Overhead Fixture: Recessed
Lamp Wattage....: 2.00 W/sqft
Ballast Mult....: 1.25
Task Lighting...: 0.00 W/sqft

PEOPLE

Occupancy.....: 4 People
Activity Level..: Office Work
Sensible.....: 245.0 BTU/hr
Latent.....: 205.0 BTU/hr

OTHER LOADS

Equipment.....: 0.00 W/sqft
Misc. Sensible..: 0.0 BTU/hr
Misc. Latent....: 0.0 BTU/hr

SCHEDULES

Lighting....: BUILDING 642, FT DEVENS
Task Lights.: BUILDING 642, FT DEVENS
People.....: BUILDING 642, FT DEVENS
Equipment...: BUILDING 642, FT DEVENS
Misc. Sens..: BUILDING 642, FT DEVENS
Misc. Latent: BUILDING 642, FT DEVENS

INFILTRATION

Cooling.....: 0.00 CFM/sqft
Heating.....: 60.0 CFM
Typical.....: 30.0 CFM
When Fan On.? N

FLOOR

Type.....:Above Conditioned Space

WALL Exp	Gross Area (sqft)	WALL Type	WINDOW Type	WINDOW Qty	WINDOW Shade	WINDOW Type	WINDOW Qty	WINDOW Shade	Any Doors?
N	195.0	3	2	3	-	5	0	-	N
W	195.0	3	2	0	-	5	0	-	N

ROOF Exp	Slope (deg)	Gross Area (sqft)	ROOF Type	SKYLIGHT Type	SKYLIGHT Qty
HOR	-	352.0	2	1	0

No partition data for this space.

SPACE DESCRIPTION

Prepared by: NEW ENGLAND DIVISION 12-10-94

HAP v3.04 Page 1

****

GENERAL

Name.....: 642, 305, 306, 307 & 308
Floor Area.....: 358.0 sqft
Building Weight.: 130.0 lb/sqft
Windows Shaded..? N
Partitions Used.? N

LIGHTING

Overhead Fixture: Recessed
Lamp Wattage....: 2.00 W/sqft
Ballast Mult....: 1.25
Task Lighting...: 0.00 W/sqft

PEOPLE

Occupancy.....: 4 People
Activity Level..: Office Work
Sensible.....: 245.0 BTU/hr
Latent.....: 205.0 BTU/hr

OTHER LOADS

Equipment.....: 0.00 W/sqft
Misc. Sensible..: 0.0 BTU/hr
Misc. Latent....: 0.0 BTU/hr

SCHEDULES

Lighting....: BUILDING 642, FT DEVENS
Task Lights.: BUILDING 642, FT DEVENS
People.....: BUILDING 642, FT DEVENS
Equipment...: BUILDING 642, FT DEVENS
Misc. Sens..: BUILDING 642, FT DEVENS
Misc. Latent: BUILDING 642, FT DEVENS

INFILTRATION

Cooling.....: 0.00 CFM/sqft
Heating.....: 60.0 CFM
Typical.....: 30.0 CFM
When Fan On.? N

FLOOR

Type.....:Above Conditioned Space

WALL Exp	Gross Area (sqft)	WALL Type	WINDOW Type	WINDOW Qty	WINDOW Shade	WINDOW Type	WINDOW Qty	WINDOW Shade	Any Doors?
N	195.0	3	2	3	-	5	0	-	N

ROOF Exp	Slope (deg)	Gross Area (sqft)	ROOF Type	SKYLIGHT Type	SKYLIGHT Qty
HOR	-	358.0	2	1	0

No partition data for this space.

SPACE DESCRIPTION

Prepared by: NEW ENGLAND DIVISION 12-10-94

HAP v3.04 Page 1

****

GENERAL

Name.....: BLDG 642, OFFICE 309
Floor Area.....: 352.0 sqft
Building Weight.: 130.0 lb/sqft
Windows Shaded..? N
Partitions Used.? N

LIGHTING

Overhead Fixture: Recessed
Lamp Wattage....: 2.00 W/sqft
Ballast Mult....: 1.25
Task Lighting...: 0.00 W/sqft

PEOPLE

Occupancy.....: 4 People
Activity Level..: Office Work
Sensible.....: 245.0 BTU/hr
Latent.....: 205.0 BTU/hr

OTHER LOADS

Equipment.....: 0.00 W/sqft
Misc. Sensible..: 0.0 BTU/hr
Misc. Latent....: 0.0 BTU/hr

SCHEDULES

Lighting....: BUILDING 642, FT DEVENS
Task Lights.: BUILDING 642, FT DEVENS
People.....: BUILDING 642, FT DEVENS
Equipment...: BUILDING 642, FT DEVENS
Misc. Sens..: BUILDING 642, FT DEVENS
Misc. Latent: BUILDING 642, FT DEVENS

INFILTRATION

Cooling.....: 0.00 CFM/sqft
Heating.....: 60.0 CFM
Typical.....: 30.0 CFM
When Fan On.? N

FLOOR

Type.....:Above Conditioned Space

WALL Exp	Gross Area (sqft)	WALL Type	WINDOW Type	WINDOW Qty	WINDOW Shade	WINDOW Type	WINDOW Qty	WINDOW Shade	Any Doors?
E	195.0	3	2	0	-	5	0	-	N
N	195.0	3	2	3	-	5	0	-	N

ROOF Exp	Slope (deg)	Gross Area (sqft)	ROOF Type	SKYLIGHT Type	SKYLIGHT Qty
HOR	-	352.0	2	1	0

No partition data for this space.

SPACE DESCRIPTION

Prepared by: NEW ENGLAND DIVISION 12-10-94

HAP v3.04 Page 1

****

GENERAL

Name.....: BLDG 642, OFFICE 310
Floor Area.....: 169.0 sqft
Building Weight.: 130.0 lb/sqft
Windows Shaded..? N
Partitions Used.? N

LIGHTING

Overhead Fixture: Recessed
Lamp Wattage....: 2.00 W/sqft
Ballast Mult....: 1.25
Task Lighting...: 0.00 W/sqft

PEOPLE

Occupancy.....: 3 People
Activity Level..: Office Work
Sensible.....: 245.0 BTU/hr
Latent.....: 205.0 BTU/hr

OTHER LOADS

Equipment.....: 0.00 W/sqft
Misc. Sensible..: 0.0 BTU/hr
Misc. Latent....: 0.0 BTU/hr

SCHEDULES

Lighting....: BUILDING 642, FT DEVENS
Task Lights.: BUILDING 642, FT DEVENS
People.....: BUILDING 642, FT DEVENS
Equipment...: BUILDING 642, FT DEVENS
Misc. Sens..: BUILDING 642, FT DEVENS
Misc. Latent: BUILDING 642, FT DEVENS

INFILTRATION

Cooling.....: 0.00 CFM/sqft
Heating.....: 40.0 CFM
Typical.....: 20.0 CFM
When Fan On.? N

FLOOR

Type.....:Above Conditioned Space

WALL Exp	Gross Area (sqft)	WALL Type	WINDOW Type	WINDOW Qty	WINDOW Shade	WINDOW Type	WINDOW Qty	WINDOW Shade	Any Doors?
S	130.0	3	2	2	-	5	0	-	N
E	140.0	3	2	0	-	5	0	-	N

ROOF Exp	Slope (deg)	Gross Area (sqft)	ROOF Type	SKYLIGHT Type	SKYLIGHT Qty
HOR	-	169.0	2	1	0

No partition data for this space.

SPACE DESCRIPTION

Prepared by: NEW ENGLAND DIVISION 12-10-94

HAP v3.04 Page 1

****

GENERAL

Name.....: BLDG 642, OFF 311 & 312
Floor Area.....: 173.0 sqft
Building Weight.: 130.0 lb/sqft
Windows Shaded..? N
Partitions Used.? N

LIGHTING

Overhead Fixture: Recessed
Lamp Wattage....: 2.00 W/sqft
Ballast Mult....: 1.25
Task Lighting...: 0.00 W/sqft

PEOPLE

Occupancy.....: 2 People
Activity Level..: Office Work
Sensible.....: 245.0 BTU/hr
Latent.....: 205.0 BTU/hr

OTHER LOADS

Equipment.....: 0.00 W/sqft
Misc. Sensible..: 0.0 BTU/hr
Misc. Latent....: 0.0 BTU/hr

SCHEDULES

Lighting....: BUILDING 642, FT DEVENS
Task Lights.: BUILDING 642, FT DEVENS
People.....: BUILDING 642, FT DEVENS
Equipment...: BUILDING 642, FT DEVENS
Misc. Sens..: BUILDING 642, FT DEVENS
Misc. Latent: BUILDING 642, FT DEVENS

INFILTRATION

Cooling.....: 0.00 CFM/sqft
Heating.....: 40.0 CFM
Typical.....: 20.0 CFM
When Fan On.? N

FLOOR

Type.....:Above Conditioned Space

WALL Exp	Gross Area (sqft)	WALL Type	WINDOW Type	WINDOW Qty	WINDOW Shade	WINDOW Type	WINDOW Qty	WINDOW Shade	Any Doors?
S	130.0	3	2	2	-	5	0	-	N

ROOF Exp	Slope (deg)	Gross Area (sqft)	ROOF Type	SKYLIGHT Type	SKYLIGHT Qty
HOR	-	173.0	2	1	0

No partition data for this space.

SPACE DESCRIPTION

Prepared by: NEW ENGLAND DIVISION
HAP v3.04

12-10-94
Page 1

****

GENERAL
Name.....: BLDG 642, OFFICE 313
Floor Area.....: 173.0 sqft
Building Weight.: 130.0 lb/sqft
Windows Shaded..? N
Partitions Used.? N

LIGHTING
Overhead Fixture: Recessed
Lamp Wattage....: 2.00 W/sqft
Ballast Mult....: 1.25
Task Lighting...: 0.00 W/sqft

PEOPLE
Occupancy.....: 2 People
Activity Level..: Office Work
Sensible.....: 245.0 BTU/hr
Latent.....: 205.0 BTU/hr

OTHER LOADS
Equipment.....: 0.00 W/sqft
Misc. Sensible..: 0.0 BTU/hr
Misc. Latent....: 0.0 BTU/hr

SCHEDULES
Lighting....: BUILDING 642, FT DEVENS
Task Lights.: BUILDING 642, FT DEVENS
People.....: BUILDING 642, FT DEVENS
Equipment...: BUILDING 642, FT DEVENS
Misc. Sens..: BUILDING 642, FT DEVENS
Misc. Latent: BUILDING 642, FT DEVENS

INFILTRATION
Cooling.....: 0.00 CFM/sqft
Heating.....: 20.0 CFM
Typical.....: 10.0 CFM
When Fan On.? N

FLOOR
Type.....:Above Conditioned Space

WALL Exp	Gross Area (sqft)	WALL Type	WINDOW Type	WINDOW Qty	WINDOW Shade	WINDOW Type	WINDOW Qty	WINDOW Shade	Any Doors?
S	50.0	3	2	1	-	5	0	-	N

ROOF Exp	Slope (deg)	Gross Area (sqft)	ROOF Type	SKYLIGHT Type	SKYLIGHT Qty
HOR	-	173.0	2	1	0

No partition data for this space.

SPACE DESCRIPTION

Prepared by: NEW ENGLAND DIVISION 12-10-94

HAP v3.04 Page 1

****

GENERAL

Name.....: BLDG 642, OFFICE 320/321
Floor Area.....: 266.0 sqft
Building Weight.: 130.0 lb/sqft
Windows Shaded..? N
Partitions Used.? N

LIGHTING

Overhead Fixture: Recessed
Lamp Wattage....: 2.00 W/sqft
Ballast Mult....: 1.25
Task Lighting...: 0.00 W/sqft

PEOPLE

Occupancy.....: 3 People
Activity Level..: Office Work
Sensible.....: 245.0 BTU/hr
Latent.....: 205.0 BTU/hr

OTHER LOADS

Equipment.....: 0.00 W/sqft
Misc. Sensible..: 0.0 BTU/hr
Misc. Latent....: 0.0 BTU/hr

SCHEDULES

Lighting....: BUILDING 642, FT DEVENS
Task Lights.: BUILDING 642, FT DEVENS
People.....: BUILDING 642, FT DEVENS
Equipment...: BUILDING 642, FT DEVENS
Misc. Sens..: BUILDING 642, FT DEVENS
Misc. Latent: BUILDING 642, FT DEVENS

INFILTRATION

Cooling.....: 0.00 CFM/sqft
Heating.....: 60.0 CFM
Typical.....: 30.0 CFM
When Fan On.? N

FLOOR

Type.....:Above Conditioned Space

WALL Exp	Gross Area (sqft)	WALL Type	WINDOW Type	WINDOW Qty	WINDOW Shade	WINDOW Type	WINDOW Qty	WINDOW Shade	Any Doors?
E	196.0	3	2	3	-	5	0	-	N

ROOF Exp	Slope (deg)	Gross Area (sqft)	ROOF Type	SKYLIGHT Type	SKYLIGHT Qty
HOR	-	266.0	2	1	0

No partition data for this space.

SPACE DESCRIPTION

Prepared by: NEW ENGLAND DIVISION 12-10-94

HAP v3.04 Page 1

****

GENERAL

Name.....: BLDG 642, OFFICE 322
Floor Area.....: 125.0 sqft
Building Weight.: 130.0 lb/sqft
Windows Shaded..? N
Partitions Used.? N

LIGHTING

Overhead Fixture: Recessed
Lamp Wattage....: 2.00 W/sqft
Ballast Mult....: 1.25
Task Lighting...: 0.00 W/sqft

PEOPLE

Occupancy.....: 2 People
Activity Level..: Office Work
Sensible.....: 245.0 BTU/hr
Latent.....: 205.0 BTU/hr

OTHER LOADS

Equipment.....: 0.00 W/sqft
Misc. Sensible..: 0.0 BTU/hr
Misc. Latent....: 0.0 BTU/hr

SCHEDULES

Lighting....: BUILDING 642, FT DEVENS
Task Lights.: BUILDING 642, FT DEVENS
People.....: BUILDING 642, FT DEVENS
Equipment...: BUILDING 642, FT DEVENS
Misc. Sens..: BUILDING 642, FT DEVENS
Misc. Latent: BUILDING 642, FT DEVENS

INFILTRATION

Cooling.....: 0.00 CFM/sqft
Heating.....: 20.0 CFM
Typical.....: 10.0 CFM
When Fan On.? N

FLOOR

Type.....:Above Conditioned Space

WALL Exp	Gross Area (sqft)	WALL Type	WINDOW Type	WINDOW Qty	WINDOW Shade	WINDOW Type	WINDOW Qty	WINDOW Shade	Any Doors?
E	110.0	3	2	1	-	5	0	-	N

ROOF Exp	Slope (deg)	Gross Area (sqft)	ROOF Type	SKYLIGHT Type	SKYLIGHT Qty
HOR	-	125.0	2	1	0

No partition data for this space.

SPACE DESCRIPTION

Prepared by: NEW ENGLAND DIVISION 12-10-94

HAP v3.04 Page 1

****

GENERAL

Name.....: BLDG 642, OFFICE 327
Floor Area.....: 240.0 sqft
Building Weight.: 130.0 lb/sqft
Windows Shaded..? N
Partitions Used.? N

LIGHTING

Overhead Fixture: Recessed
Lamp Wattage....: 2.00 W/sqft
Ballast Mult....: 1.25
Task Lighting...: 0.00 W/sqft

PEOPLE

Occupancy.....: 3 People
Activity Level..: Office Work
Sensible.....: 245.0 BTU/hr
Latent.....: 205.0 BTU/hr

OTHER LOADS

Equipment.....: 0.00 W/sqft
Misc. Sensible..: 0.0 BTU/hr
Misc. Latent....: 0.0 BTU/hr

SCHEDULES

Lighting....: BUILDING 642, FT DEVENS
Task Lights.: BUILDING 642, FT DEVENS
People.....: BUILDING 642, FT DEVENS
Equipment...: BUILDING 642, FT DEVENS
Misc. Sens..: BUILDING 642, FT DEVENS
Misc. Latent: BUILDING 642, FT DEVENS

INFILTRATION

Cooling.....: 0.00 CFM/sqft
Heating.....: 20.0 CFM
Typical.....: 10.0 CFM
When Fan On.? N

FLOOR

Type.....:Above Conditioned Space

WALL Exp	Gross Area (sqft)	WALL Type	WINDOW Type	WINDOW Qty	WINDOW Shade	WINDOW Type	WINDOW Qty	WINDOW Shade	Any Doors?
N	50.0	3	2	1	-	5	0	-	N

ROOF Exp	Slope (deg)	Gross Area (sqft)	ROOF Type	SKYLIGHT Type	SKYLIGHT Qty
HOR	-	240.0	2	1	0

No partition data for this space.

SPACE DESCRIPTION

Prepared by: NEW ENGLAND DIVISION 12-10-94

HAP v3.04 Page 1

****

GENERAL

Name.....: BLDG 642, OFFICE 328

Floor Area.....: 173.0 sqft

Building Weight.: 130.0 lb/sqft

Windows Shaded..? N

Partitions Used.? N

LIGHTING

Overhead Fixture: Recessed

Lamp Wattage....: 2.00 W/sqft

Ballast Mult....: 1.25

Task Lighting...: 0.00 W/sqft

PEOPLE

Occupancy.....: 2 People

Activity Level..: Office Work

Sensible.....: 245.0 BTU/hr

Latent.....: 205.0 BTU/hr

OTHER LOADS

Equipment.....: 0.00 W/sqft

Misc. Sensible..: 0.0 BTU/hr

Misc. Latent....: 0.0 BTU/hr

SCHEDULES

Lighting....: BUILDING 642, FT DEVENS

Task Lights.: BUILDING 642, FT DEVENS

People.....: BUILDING 642, FT DEVENS

Equipment...: BUILDING 642, FT DEVENS

Misc. Sens..: BUILDING 642, FT DEVENS

Misc. Latent: BUILDING 642, FT DEVENS

INFILTRATION

Cooling.....: 0.00 CFM/sqft

Heating.....: 40.0 CFM

Typical.....: 20.0 CFM

When Fan On.? N

FLOOR

Type.....:Above Conditioned Space

WALL Exp	Gross Area (sqft)	WALL Type	WINDOW Type	WINDOW Qty	WINDOW Shade	WINDOW Type	WINDOW Qty	WINDOW Shade	Any Doors?
N	130.0	3	2	2	-	5	0	-	N

ROOF Exp	Slope (deg)	Gross Area (sqft)	ROOF Type	SKYLIGHT Type	SKYLIGHT Qty
HOR	-	173.0	2	1	0

No partition data for this space.

SPACE DESCRIPTION

Prepared by: NEW ENGLAND DIVISION 12-10-94

HAP v3.04 Page 1

****

GENERAL

Name.....: BLDG 642, OFFICE 329

Floor Area.....: 345.0 sqft

Building Weight.: 130.0 lb/sqft

Windows Shaded..? N

Partitions Used.? N

LIGHTING

Overhead Fixture: Recessed

Lamp Wattage....: 2.00 W/sqft

Ballast Mult....: 1.25

Task Lighting...: 0.00 W/sqft

PEOPLE

Occupancy.....: 4 People

Activity Level..: Office Work

Sensible.....: 245.0 BTU/hr

Latent.....: 205.0 BTU/hr

OTHER LOADS

Equipment.....: 0.00 W/sqft

Misc. Sensible..: 0.0 BTU/hr

Misc. Latent....: 0.0 BTU/hr

SCHEDULES

Lighting....: BUILDING 642, FT DEVENS

Task Lights.: BUILDING 642, FT DEVENS

People.....: BUILDING 642, FT DEVENS

Equipment...: BUILDING 642, FT DEVENS

Misc. Sens..: BUILDING 642, FT DEVENS

Misc. Latent: BUILDING 642, FT DEVENS

INFILTRATION

Cooling.....: 0.00 CFM/sqft

Heating.....: 80.0 CFM

Typical.....: 40.0 CFM

When Fan On.? N

FLOOR

Type.....:Above Conditioned Space

WALL Exp	Gross Area (sqft)	WALL Type	WINDOW Type	WINDOW Qty	WINDOW Shade	WINDOW Type	WINDOW Qty	WINDOW Shade	Any Doors?
N	265.0	3	2	4	-	5	0	-	N
E	140.0	3	2	0	-	5	0	-	N

ROOF Exp	Slope (deg)	Gross Area (sqft)	ROOF Type	SKYLIGHT Type	SKYLIGHT Qty
HOR	-	345.0	2	1	0

No partition data for this space.

SPACE DESCRIPTION

Prepared by: NEW ENGLAND DIVISION 12-10-94

HAP v3.04 Page 1

****

GENERAL

Name.....: BLDG 642, OFFICE 330
Floor Area.....: 352.0 sqft
Building Weight.: 130.0 lb/sqft
Windows Shaded..? N
Partitions Used.? N

LIGHTING

Overhead Fixture: Recessed
Lamp Wattage....: 2.00 W/sqft
Ballast Mult....: 1.25
Task Lighting...: 0.00 W/sqft

PEOPLE

Occupancy.....: 4 People
Activity Level..: Office Work
Sensible.....: 245.0 BTU/hr
Latent.....: 205.0 BTU/hr

OTHER LOADS

Equipment.....: 0.00 W/sqft
Misc. Sensible..: 0.0 BTU/hr
Misc. Latent....: 0.0 BTU/hr

SCHEDULES

Lighting....: BUILDING 642, FT DEVENS
Task Lights.: BUILDING 642, FT DEVENS
People.....: BUILDING 642, FT DEVENS
Equipment...: BUILDING 642, FT DEVENS
Misc. Sens..: BUILDING 642, FT DEVENS
Misc. Latent: BUILDING 642, FT DEVENS

INFILTRATION

Cooling.....: 0.00 CFM/sqft
Heating.....: 60.0 CFM
Typical.....: 30.0 CFM
When Fan On.? N

FLOOR

Type.....:Above Conditioned Space

WALL Exp	Gross Area (sqft)	WALL Type	WINDOW Type	WINDOW Qty	WINDOW Shade	WINDOW Type	WINDOW Qty	WINDOW Shade	Any Doors?
S	195.0	3	2	3	-	5	0	-	N
E	195.0	3	2	0	-	5	0	-	N

ROOF Exp	Slope (deg)	Gross Area (sqft)	ROOF Type	SKYLIGHT Type	SKYLIGHT Qty
HOR	-	352.0	2	1	0

No partition data for this space.

SPACE DESCRIPTION

Prepared by: NEW ENGLAND DIVISION 12-10-94

HAP v3.04 Page 1

****

GENERAL

Name.....: 642, 331, 332, 333 & 334
Floor Area.....: 358.0 sqft
Building Weight.: 130.0 lb/sqft
Windows Shaded..? N
Partitions Used.? N

LIGHTING

Overhead Fixture: Recessed
Lamp Wattage....: 2.00 W/sqft
Ballast Mult....: 1.25
Task Lighting...: 0.00 W/sqft

PEOPLE

Occupancy.....: 4 People
Activity Level..: Office Work
Sensible.....: 245.0 BTU/hr
Latent.....: 205.0 BTU/hr

OTHER LOADS

Equipment.....: 0.00 W/sqft
Misc. Sensible..: 0.0 BTU/hr
Misc. Latent....: 0.0 BTU/hr

SCHEDULES

Lighting....: BUILDING 642, FT DEVENS
Task Lights.: BUILDING 642, FT DEVENS
People.....: BUILDING 642, FT DEVENS
Equipment...: BUILDING 642, FT DEVENS
Misc. Sens..: BUILDING 642, FT DEVENS
Misc. Latent: BUILDING 642, FT DEVENS

INFILTRATION

Cooling.....: 0.00 CFM/sqft
Heating.....: 60.0 CFM
Typical.....: 30.0 CFM
When Fan On.? N

FLOOR

Type.....:Above Conditioned Space

WALL Exp	Gross Area (sqft)	WALL Type	WINDOW Type	WINDOW Qty	WINDOW Shade	WINDOW Type	WINDOW Qty	WINDOW Shade	Any Doors?
S	195.0	3	2	3	-	5	0	-	N

ROOF Exp	Slope (deg)	Gross Area (sqft)	ROOF Type	SKYLIGHT Type	SKYLIGHT Qty
HOR	-	358.0	2	1	0

No partition data for this space.

SPACE DESCRIPTION

Prepared by: NEW ENGLAND DIVISION 12-10-94

HAP v3.04 Page 1

****

GENERAL
- Name.....: BLDG 642, OFFICE 335
- Floor Area.....: 352.0 sqft
- Building Weight.: 130.0 lb/sqft
- Windows Shaded..? N
- Partitions Used.? N

LIGHTING
- Overhead Fixture: Recessed
- Lamp Wattage....: 2.00 W/sqft
- Ballast Mult....: 1.25
- Task Lighting...: 0.00 W/sqft

PEOPLE
- Occupancy.....: 4 People
- Activity Level..: Office Work
- Sensible.....: 245.0 BTU/hr
- Latent.....: 205.0 BTU/hr

OTHER LOADS
- Equipment.....: 0.00 W/sqft
- Misc. Sensible..: 0.0 BTU/hr
- Misc. Latent....: 0.0 BTU/hr

SCHEDULES
- Lighting....: BUILDING 642, FT DEVENS
- Task Lights.: BUILDING 642, FT DEVENS
- People.....: BUILDING 642, FT DEVENS
- Equipment...: BUILDING 642, FT DEVENS
- Misc. Sens..: BUILDING 642, FT DEVENS
- Misc. Latent: BUILDING 642, FT DEVENS

INFILTRATION
- Cooling.....: 0.00 CFM/sqft
- Heating.....: 60.0 CFM
- Typical.....: 30.0 CFM
- When Fan On.? N

FLOOR
- Type.....:Above Conditioned Space

WALL Exp	Gross Area (sqft)	WALL Type	WINDOW Type	WINDOW Qty	WINDOW Shade	WINDOW Type	WINDOW Qty	WINDOW Shade	Any Doors?
S	195.0	3	2	3	-	5	0	-	N
W	195.0	3	2	0	-	5	0	-	N

ROOF Exp	Slope (deg)	Gross Area (sqft)	ROOF Type	SKYLIGHT Type	SKYLIGHT Qty
HOR	-	352.0	2	1	0

No partition data for this space.

SPACE DESCRIPTION

Prepared by: NEW ENGLAND DIVISION 12-10-94

HAP v3.04 Page 1

****

GENERAL

Name.....: BLDG 642, OFFICE 336
Floor Area.....: 164.0 sqft
Building Weight.: 130.0 lb/sqft
Windows Shaded..? N
Partitions Used.? N

LIGHTING

Overhead Fixture: Recessed
Lamp Wattage....: 2.00 W/sqft
Ballast Mult....: 1.25
Task Lighting...: 0.00 W/sqft

PEOPLE

Occupancy.....: 2 People
Activity Level..: Office Work
Sensible.....: 245.0 BTU/hr
Latent.....: 205.0 BTU/hr

OTHER LOADS

Equipment.....: 0.00 W/sqft
Misc. Sensible..: 0.0 BTU/hr
Misc. Latent....: 0.0 BTU/hr

SCHEDULES

Lighting....: BUILDING 642, FT DEVENS
Task Lights.: BUILDING 642, FT DEVENS
People.....: BUILDING 642, FT DEVENS
Equipment...: BUILDING 642, FT DEVENS
Misc. Sens..: BUILDING 642, FT DEVENS
Misc. Latent: BUILDING 642, FT DEVENS

INFILTRATION

Cooling.....: 0.00 CFM/sqft
Heating.....: 40.0 CFM
Typical.....: 20.0 CFM
When Fan On.? N

FLOOR

Type.....:Above Conditioned Space

WALL Exp	Gross Area (sqft)	WALL Type	WINDOW Type	WINDOW Qty	WINDOW Shade	WINDOW Type	WINDOW Qty	WINDOW Shade	Any Doors?
N	130.0	3	2	2	-	5	0	-	N
W	140.0	3	2	0	-	5	0	-	N

ROOF Exp	Slope (deg)	Gross Area (sqft)	ROOF Type	SKYLIGHT Type	SKYLIGHT Qty
HOR	-	164.0	2	1	0

No partition data for this space.

SPACE DESCRIPTION

Prepared by: NEW ENGLAND DIVISION 12-10-94

HAP v3.04 Page 1

****

GENERAL

Name.....: BLDG 642, OFFICE 337/338
Floor Area.....: 164.0 sqft
Building Weight.: 130.0 lb/sqft
Windows Shaded..? N
Partitions Used.? N

LIGHTING

Overhead Fixture: Recessed
Lamp Wattage....: 2.00 W/sqft
Ballast Mult....: 1.25
Task Lighting...: 0.00 W/sqft

PEOPLE

Occupancy.....: 2 People
Activity Level..: Office Work
Sensible.....: 245.0 BTU/hr
Latent.....: 205.0 BTU/hr

OTHER LOADS

Equipment.....: 0.00 W/sqft
Misc. Sensible..: 0.0 BTU/hr
Misc. Latent....: 0.0 BTU/hr

SCHEDULES

Lighting....: BUILDING 642, FT DEVENS
Task Lights.: BUILDING 642, FT DEVENS
People.....: BUILDING 642, FT DEVENS
Equipment...: BUILDING 642, FT DEVENS
Misc. Sens..: BUILDING 642, FT DEVENS
Misc. Latent: BUILDING 642, FT DEVENS

INFILTRATION

Cooling.....: 0.00 CFM/sqft
Heating.....: 40.0 CFM
Typical.....: 20.0 CFM
When Fan On.? N

FLOOR

Type.....:Above Conditioned Space

WALL Exp	Gross Area (sqft)	WALL Type	WINDOW Type	WINDOW Qty	WINDOW Shade	WINDOW Type	WINDOW Qty	WINDOW Shade	Any Doors?
N	130.0	3	2	2	-	5	0	-	N

ROOF Exp	Slope (deg)	Gross Area (sqft)	ROOF Type	SKYLIGHT Type	SKYLIGHT Qty
HOR	-	166.0	2	1	0

No partition data for this space.

SPACE DESCRIPTION

Prepared by: NEW ENGLAND DIVISION 12-10-94

HAP v3.04 Page 1

****

GENERAL

Name.....: BLDG 642, OFFICE 340
Floor Area.....: 293.0 sqft
Building Weight.: 130.0 lb/sqft
Windows Shaded..? N
Partitions Used.? N

LIGHTING

Overhead Fixture: Recessed
Lamp Wattage....: 2.00 W/sqft
Ballast Mult....: 1.25
Task Lighting...: 0.00 W/sqft

PEOPLE

Occupancy.....: 4 People
Activity Level..: Office Work
Sensible.....: 245.0 BTU/hr
Latent.....: 205.0 BTU/hr

OTHER LOADS

Equipment.....: 0.00 W/sqft
Misc. Sensible..: 0.0 BTU/hr
Misc. Latent....: 0.0 BTU/hr

SCHEDULES

Lighting....: BUILDING 642, FT DEVENS
Task Lights.: BUILDING 642, FT DEVENS
People.....: BUILDING 642, FT DEVENS
Equipment...: BUILDING 642, FT DEVENS
Misc. Sens..: BUILDING 642, FT DEVENS
Misc. Latent: BUILDING 642, FT DEVENS

INFILTRATION

Cooling.....: 0.00 CFM/sqft
Heating.....: 80.0 CFM
Typical.....: 40.0 CFM
When Fan On.? N

FLOOR

Type.....:Above Conditioned Space

WALL Exp	Gross Area (sqft)	WALL Type	WINDOW Type	WINDOW Qty	WINDOW Shade	WINDOW Type	WINDOW Qty	WINDOW Shade	Any Doors?
W	237.0	3	2	3	-	5	1	-	N

ROOF Exp	Slope (deg)	Gross Area (sqft)	ROOF Type	SKYLIGHT Type	SKYLIGHT Qty
HOR	-	293.0	2	1	0

No partition data for this space.

SPACE DESCRIPTION

Prepared by: NEW ENGLAND DIVISION 12-10-94
HAP v3.04 Page 1

****

GENERAL
Name.....: BLDG 642, OFFICE 341
Floor Area.....: 297.0 sqft
Building Weight.: 130.0 lb/sqft
Windows Shaded..? N
Partitions Used.? N

LIGHTING
Overhead Fixture: Recessed
Lamp Wattage....: 2.00 W/sqft
Ballast Mult....: 1.25
Task Lighting...: 0.00 W/sqft

PEOPLE
Occupancy.....: 4 People
Activity Level..: Office Work
Sensible.....: 245.0 BTU/hr
Latent.....: 205.0 BTU/hr

OTHER LOADS
Equipment.....: 0.00 W/sqft
Misc. Sensible..: 0.0 BTU/hr
Misc. Latent....: 0.0 BTU/hr

SCHEDULES
Lighting....: BUILDING 642, FT DEVENS
Task Lights.: BUILDING 642, FT DEVENS
People.....: BUILDING 642, FT DEVENS
Equipment...: BUILDING 642, FT DEVENS
Misc. Sens..: BUILDING 642, FT DEVENS
Misc. Latent: BUILDING 642, FT DEVENS

INFILTRATION
Cooling.....: 0.00 CFM/sqft
Heating.....: 80.0 CFM
Typical.....: 40.0 CFM
When Fan On.? N

FLOOR
Type.....:Above Conditioned Space

WALL Exp	Gross Area (sqft)	WALL Type	WINDOW Type	WINDOW Qty	WINDOW Shade	WINDOW Type	WINDOW Qty	WINDOW Shade	Any Doors?
W	260.0	3	2	4	-	5	0	-	N

ROOF Exp	Slope (deg)	Gross Area (sqft)	ROOF Type	SKYLIGHT Type	SKYLIGHT Qty
HOR	-	297.0	2	1	0

No partition data for this space.

SPACE DESCRIPTION

Prepared by: NEW ENGLAND DIVISION 12-10-94

HAP v3.04 Page 1

****

GENERAL

Name.....: BLDG 642, OFFICE 342/343
Floor Area.....: 266.0 sqft
Building Weight.: 130.0 lb/sqft
Windows Shaded..? N
Partitions Used.? N

LIGHTING

Overhead Fixture: Recessed
Lamp Wattage....: 2.00 W/sqft
Ballast Mult....: 1.25
Task Lighting...: 0.00 W/sqft

PEOPLE

Occupancy.....: 3 People
Activity Level..: Office Work
Sensible.....: 245.0 BTU/hr
Latent.....: 205.0 BTU/hr

OTHER LOADS

Equipment.....: 0.00 W/sqft
Misc. Sensible..: 0.0 BTU/hr
Misc. Latent....: 0.0 BTU/hr

SCHEDULES

Lighting....: BUILDING 642, FT DEVENS
Task Lights.: BUILDING 642, FT DEVENS
People.....: BUILDING 642, FT DEVENS
Equipment...: BUILDING 642, FT DEVENS
Misc. Sens..: BUILDING 642, FT DEVENS
Misc. Latent: BUILDING 642, FT DEVENS

INFILTRATION

Cooling.....: 0.00 CFM/sqft
Heating.....: 60.0 CFM
Typical.....: 30.0 CFM
When Fan On.? N

FLOOR

Type.....:Above Conditioned Space

WALL Exp	Gross Area (sqft)	WALL Type	WINDOW Type	WINDOW Qty	WINDOW Shade	WINDOW Type	WINDOW Qty	WINDOW Shade	Any Doors?
W	195.0	3	2	3	-	5	0	-	N

ROOF Exp	Slope (deg)	Gross Area (sqft)	ROOF Type	SKYLIGHT Type	SKYLIGHT Qty
HOR	-	266.0	2	1	0

No partition data for this space.

SPACE DESCRIPTION

Prepared by: NEW ENGLAND DIVISION 12-10-94

HAP v3.04 Page 1

****

GENERAL

Name.....: BLDG 642, OFFICE 344

Floor Area.....: 343.0 sqft

Building Weight.: 130.0 lb/sqft

Windows Shaded..? N

Partitions Used.? N

LIGHTING

Overhead Fixture: Recessed

Lamp Wattage....: 2.00 W/sqft

Ballast Mult....: 1.25

Task Lighting...: 0.00 W/sqft

PEOPLE

Occupancy.....: 4 People

Activity Level..: Office Work

Sensible.....: 245.0 BTU/hr

Latent.....: 205.0 BTU/hr

OTHER LOADS

Equipment.....: 0.00 W/sqft

Misc. Sensible..: 0.0 BTU/hr

Misc. Latent....: 0.0 BTU/hr

SCHEDULES

Lighting....: BUILDING 642, FT DEVENS

Task Lights.: BUILDING 642, FT DEVENS

People.....: BUILDING 642, FT DEVENS

Equipment...: BUILDING 642, FT DEVENS

Misc. Sens..: BUILDING 642, FT DEVENS

Misc. Latent: BUILDING 642, FT DEVENS

INFILTRATION

Cooling.....: 0.00 CFM/sqft

Heating.....: 80.0 CFM

Typical.....: 40.0 CFM

When Fan On.? N

FLOOR

Type.....:Above Conditioned Space

WALL Exp	Gross Area (sqft)	WALL Type	WINDOW Type	WINDOW Qty	WINDOW Shade	WINDOW Type	WINDOW Qty	WINDOW Shade	Any Doors?
W	255.0	3	2	4	-	5	0	-	N

ROOF Exp	Slope (deg)	Gross Area (sqft)	ROOF Type	SKYLIGHT Type	SKYLIGHT Qty
HOR	-	343.0	2	1	0

No partition data for this space.

SPACE DESCRIPTION

Prepared by: NEW ENGLAND DIVISION
HAP v3.04

12-10-94
Page 1

****

GENERAL
Name.....: BLDG 642, OFFICE 345
Floor Area.....: 273.0 sqft
Building Weight.: 130.0 lb/sqft
Windows Shaded..? N
Partitions Used.? N

LIGHTING
Overhead Fixture: Recessed
Lamp Wattage....: 2.00 W/sqft
Ballast Mult....: 1.25
Task Lighting...: 0.00 W/sqft

PEOPLE
Occupancy.....: 3 People
Activity Level..: Office Work
Sensible.....: 245.0 BTU/hr
Latent.....: 205.0 BTU/hr

OTHER LOADS
Equipment.....: 0.00 W/sqft
Misc. Sensible..: 0.0 BTU/hr
Misc. Latent....: 0.0 BTU/hr

SCHEDULES
Lighting....: BUILDING 642, FT DEVENS
Task Lights.: BUILDING 642, FT DEVENS
People.....: BUILDING 642, FT DEVENS
Equipment...: BUILDING 642, FT DEVENS
Misc. Sens..: BUILDING 642, FT DEVENS
Misc. Latent: BUILDING 642, FT DEVENS

INFILTRATION
Cooling.....: 0.00 CFM/sqft
Heating.....: 60.0 CFM
Typical.....: 30.0 CFM
When Fan On.? N

FLOOR
Type.....:Above Conditioned Space

WALL Exp	Gross Area (sqft)	WALL Type	WINDOW Type	WINDOW Qty	WINDOW Shade	WINDOW Type	WINDOW Qty	WINDOW Shade	Any Doors?
W	195.0	3	2	2	-	5	1	-	N

ROOF Exp	Slope (deg)	Gross Area (sqft)	ROOF Type	SKYLIGHT Type	SKYLIGHT Qty
HOR	-	273.0	2	1	0

No partition data for this space.

SPACE DESCRIPTION

Prepared by: NEW ENGLAND DIVISION 12-10-94

HAP v3.04 Page 1

****

GENERAL

Name.....: BLDG 642, TELEPHONE 346
Floor Area.....: 70.0 sqft
Building Weight.: 130.0 lb/sqft
Windows Shaded..? N
Partitions Used.? N

LIGHTING

Overhead Fixture: Recessed
Lamp Wattage....: 2.00 W/sqft
Ballast Mult....: 1.25
Task Lighting...: 0.00 W/sqft

PEOPLE

Occupancy.....: 0 People
Activity Level..: Office Work
Sensible.....: 245.0 BTU/hr
Latent.....: 205.0 BTU/hr

OTHER LOADS

Equipment.....: 0.00 W/sqft
Misc. Sensible..: 0.0 BTU/hr
Misc. Latent....: 0.0 BTU/hr

SCHEDULES

Lighting....: BUILDING 642, FT DEVENS
Task Lights.: BUILDING 642, FT DEVENS
People.....: BUILDING 642, FT DEVENS
Equipment...: BUILDING 642, FT DEVENS
Misc. Sens..: BUILDING 642, FT DEVENS
Misc. Latent: BUILDING 642, FT DEVENS

INFILTRATION

Cooling.....: 0.00 CFM/sqft
Heating.....: 0.0 CFM
Typical.....: 0.0 CFM
When Fan On.? N

FLOOR

Type.....:Above Conditioned Space

WALL Exp	Gross Area (sqft)	WALL Type	WINDOW Type	WINDOW Qty	WINDOW Shade	WINDOW Type	WINDOW Qty	WINDOW Shade	Any Doors?
W	45.0	3	2	0	-	5	0	-	N

ROOF Exp	Slope (deg)	Gross Area (sqft)	ROOF Type	SKYLIGHT Type	SKYLIGHT Qty
HOR	-	70.0	2	1	0

No partition data for this space.

SPACE DESCRIPTION

Prepared by: NEW ENGLAND DIVISION 12-10-94

HAP v3.04 Page 1

****

GENERAL

Name.....: BLDG 642, C31 & C35
Floor Area.....: 292.5 sqft
Building Weight.: 130.0 lb/sqft
Windows Shaded..? N
Partitions Used.? N

LIGHTING

Overhead Fixture: Recessed
Lamp Wattage....: 2.00 W/sqft
Ballast Mult....: 1.25
Task Lighting...: 0.00 W/sqft

PEOPLE

Occupancy.....: 0 People
Activity Level..: Office Work
Sensible.....: 245.0 BTU/hr
Latent.....: 205.0 BTU/hr

OTHER LOADS

Equipment.....: 0.00 W/sqft
Misc. Sensible..: 0.0 BTU/hr
Misc. Latent....: 0.0 BTU/hr

SCHEDULES

Lighting....: BUILDING 642, FT DEVENS
Task Lights.: BUILDING 642, FT DEVENS
People.....: BUILDING 642, FT DEVENS
Equipment...: BUILDING 642, FT DEVENS
Misc. Sens..: BUILDING 642, FT DEVENS
Misc. Latent: BUILDING 642, FT DEVENS

INFILTRATION

Cooling.....: 0.00 CFM/sqft
Heating.....: 40.0 CFM
Typical.....: 20.0 CFM
When Fan On.? N

FLOOR

Type.....:Above Conditioned Space

WALL Exp	Gross Area (sqft)	WALL Type	WINDOW Type	WINDOW Qty	WINDOW Shade	WINDOW Type	WINDOW Qty	WINDOW Shade	Any Doors?
W	50.0	3	1	0	-	1	0	-	Y

ROOF Exp	Slope (deg)	Gross Area (sqft)	ROOF Type	SKYLIGHT Type	SKYLIGHT Qty
HOR	-	292.5	2	1	0
-	-	-	-	-	-
-	-	-	-	-	-
-	-	-	-	-	-

DOOR

Gross Area..: 20.0 sqft
Uvalue.....: 0.300
Glass Area..: 0.0 sqft
Glass U-val.: 0.500
Shade Coeff.: 1.00
Glass Shaded? N

No partition data for this space.

102

SPACE DESCRIPTION

Prepared by: NEW ENGLAND DIVISION 12-10-94

HAP v3.04 Page 1

****

GENERAL
- Name.....: BLDG 642, C32 & C36
- Floor Area.....: 292.5 sqft
- Building Weight.: 130.0 lb/sqft
- Windows Shaded..? N
- Partitions Used.? N

LIGHTING
- Overhead Fixture: Recessed
- Lamp Wattage....: 2.00 W/sqft
- Ballast Mult....: 1.25
- Task Lighting...: 0.00 W/sqft

PEOPLE
- Occupancy.....: 0 People
- Activity Level..: Office Work
- Sensible.....: 245.0 BTU/hr
- Latent.....: 205.0 BTU/hr

OTHER LOADS
- Equipment.....: 0.00 W/sqft
- Misc. Sensible..: 0.0 BTU/hr
- Misc. Latent....: 0.0 BTU/hr

SCHEDULES
- Lighting....: BUILDING 642, FT DEVENS
- Task Lights.: BUILDING 642, FT DEVENS
- People.....: BUILDING 642, FT DEVENS
- Equipment...: BUILDING 642, FT DEVENS
- Misc. Sens..: BUILDING 642, FT DEVENS
- Misc. Latent: BUILDING 642, FT DEVENS

INFILTRATION
- Cooling.....: 0.00 CFM/sqft
- Heating.....: 40.0 CFM
- Typical.....: 20.0 CFM
- When Fan On.? N

FLOOR
- Type.....:Above Conditioned Space

WALL Exp	Gross Area (sqft)	WALL Type	WINDOW Type	WINDOW Qty	WINDOW Shade	WINDOW Type	WINDOW Qty	WINDOW Shade	Any Doors?
E	50.0	3	1	0	-	1	0	-	Y

ROOF Exp	Slope (deg)	Gross Area (sqft)	ROOF Type	SKYLIGHT Type	SKYLIGHT Qty
HOR	-	292.5	2	1	0
-	-	-	-	-	-
-	-	-	-	-	-
-	-	-	-	-	-

DOOR
- Gross Area..: 20.0 sqft
- Uvalue.....: 0.300
- Glass Area..: 0.0 sqft
- Glass U-val.: 0.500
- Shade Coeff.: 1.00
- Glass Shaded? N

No partition data for this space.

SPACE DESCRIPTION

Prepared by: NEW ENGLAND DIVISION

HAP v3.04

12-10-94

****

GENERAL

Name.....: BLDG 642, C33 & C34
Floor Area.....: 465.0 sqft
Building Weight.: 130.0 lb/sqft
Windows Shaded..? N
Partitions Used.? N

LIGHTING

Overhead Fixture: Recessed
Lamp Wattage....: 2.00 W/sqft
Ballast Mult....: 1.25
Task Lighting...: 0.00 W/sqft

PEOPLE

Occupancy.....: 0 People
Activity Level..: Office Work
Sensible.....: 245.0 BTU/hr
Latent.....: 205.0 BTU/hr

OTHER LOADS

Equipment.....: 0.00 W/sqft
Misc. Sensible..: 0.0 BTU/hr
Misc. Latent....: 0.0 BTU/hr

SCHEDULES

Lighting....: BUILDING 642, FT DEVENS
Task Lights.: BUILDING 642, FT DEVENS
People.....: BUILDING 642, FT DEVENS
Equipment...: BUILDING 642, FT DEVENS
Misc. Sens..: BUILDING 642, FT DEVENS
Misc. Latent: BUILDING 642, FT DEVENS

INFILTRATION

Cooling.....: 0.00 CFM/sqft
Heating.....: 0.0 CFM
Typical.....: 0.0 CFM
When Fan On.? N

FLOOR

Type.....:Above Conditioned Space

==========

No external wall or window data for this space.

==========

ROOF Exp	Slope (deg)	Gross Area (sqft)	ROOF Type	SKYLIGHT Type	SKYLIGHT Qty
HOR	-	465.0	2	1	0

==========

No partition data for this space.

==========

SPACE DESCRIPTION

Prepared by: NEW ENGLAND DIVISION 12-10-94

HAP v3.04 Page 1

****

GENERAL
- Name.....: BLDG 642, STORAGE 314
- Floor Area.....: 64.0 sqft
- Building Weight.: 130.0 lb/sqft
- Windows Shaded..? N
- Partitions Used.? N

LIGHTING
- Overhead Fixture: Recessed
- Lamp Wattage....: 2.00 W/sqft
- Ballast Mult....: 1.25
- Task Lighting...: 0.00 W/sqft

PEOPLE
- Occupancy.....: 0 People
- Activity Level..: Office Work
- Sensible.....: 245.0 BTU/hr
- Latent.....: 205.0 BTU/hr

OTHER LOADS
- Equipment.....: 0.00 W/sqft
- Misc. Sensible..: 0.0 BTU/hr
- Misc. Latent....: 0.0 BTU/hr

SCHEDULES
- Lighting....: BUILDING 642, FT DEVENS
- Task Lights.: BUILDING 642, FT DEVENS
- People.....: BUILDING 642, FT DEVENS
- Equipment...: BUILDING 642, FT DEVENS
- Misc. Sens..: BUILDING 642, FT DEVENS
- Misc. Latent: BUILDING 642, FT DEVENS

INFILTRATION
- Cooling.....: 0.00 CFM/sqft
- Heating.....: 0.0 CFM
- Typical.....: 0.0 CFM
- When Fan On.? N

FLOOR
- Type.....:Above Conditioned Space

==========

No external wall or window data for this space.

==========

ROOF Exp	Slope (deg)	Gross Area (sqft)	ROOF Type	SKYLIGHT Type	SKYLIGHT Qty
HOR	-	64.0	2	1	0

==========

No partition data for this space.

==========

SPACE DESCRIPTION

Prepared by: NEW ENGLAND DIVISION 12-10-94

HAP v3.04 Page 1

****

GENERAL

Name.....: BLDG 642, REST 317 & 324
Floor Area.....: 624.0 sqft
Building Weight.: 130.0 lb/sqft
Windows Shaded..? N
Partitions Used.? N

LIGHTING

Overhead Fixture: Recessed
Lamp Wattage....: 2.00 W/sqft
Ballast Mult....: 1.25
Task Lighting...: 0.00 W/sqft

PEOPLE

Occupancy.....: 0 People
Activity Level..: Office Work
Sensible.....: 245.0 BTU/hr
Latent.....: 205.0 BTU/hr

OTHER LOADS

Equipment.....: 0.00 W/sqft
Misc. Sensible..: 0.0 BTU/hr
Misc. Latent....: 0.0 BTU/hr

SCHEDULES

Lighting....: BUILDING 642, FT DEVENS
Task Lights.: BUILDING 642, FT DEVENS
People.....: BUILDING 642, FT DEVENS
Equipment...: BUILDING 642, FT DEVENS
Misc. Sens..: BUILDING 642, FT DEVENS
Misc. Latent: BUILDING 642, FT DEVENS

INFILTRATION

Cooling.....: 0.00 CFM/sqft
Heating.....: 100.0 CFM
Typical.....: 50.0 CFM
When Fan On.? N

FLOOR

Type.....:Above Conditioned Space

WALL Exp	Gross Area (sqft)	WALL Type	WINDOW Type	WINDOW Qty	WINDOW Shade	WINDOW Type	WINDOW Qty	WINDOW Shade	Any Doors?
E	480.0	3	2	5	-	5	0	-	N

ROOF Exp	Slope (deg)	Gross Area (sqft)	ROOF Type	SKYLIGHT Type	SKYLIGHT Qty
HOR	-	624.0	2	1	0

No partition data for this space.

SPACE DESCRIPTION

Prepared by: NEW ENGLAND DIVISION 12-10-94

HAP v3.04 Page 1

****

GENERAL

Name.....: BLDG 642, STORAGE 319
Floor Area.....: 125.0 sqft
Building Weight.: 130.0 lb/sqft
Windows Shaded..? N
Partitions Used.? N

LIGHTING

Overhead Fixture: Recessed
Lamp Wattage....: 2.00 W/sqft
Ballast Mult....: 1.25
Task Lighting...: 0.00 W/sqft

PEOPLE

Occupancy.....: 0 People
Activity Level..: Office Work
Sensible.....: 245.0 BTU/hr
Latent.....: 205.0 BTU/hr

OTHER LOADS

Equipment.....: 0.00 W/sqft
Misc. Sensible..: 0.0 BTU/hr
Misc. Latent....: 0.0 BTU/hr

SCHEDULES

Lighting....: BUILDING 642, FT DEVENS
Task Lights.: BUILDING 642, FT DEVENS
People.....: BUILDING 642, FT DEVENS
Equipment...: BUILDING 642, FT DEVENS
Misc. Sens..: BUILDING 642, FT DEVENS
Misc. Latent: BUILDING 642, FT DEVENS

INFILTRATION

Cooling.....: 0.00 CFM/sqft
Heating.....: 40.0 CFM
Typical.....: 20.0 CFM
When Fan On.? N

FLOOR

Type.....:Above Conditioned Space

WALL Exp	Gross Area (sqft)	WALL Type	WINDOW Type	WINDOW Qty	WINDOW Shade	WINDOW Type	WINDOW Qty	WINDOW Shade	Any Doors?
E	110.0	3	2	1	-	1	0	-	N

ROOF Exp	Slope (deg)	Gross Area (sqft)	ROOF Type	SKYLIGHT Type	SKYLIGHT Qty
HOR	-	125.0	2	1	0

No partition data for this space.

SPACE DESCRIPTION

Prepared by: NEW ENGLAND DIVISION
HAP v3.04

12-10-94
Page 1

****

GENERAL
Name.....: BLDG 642, STAIRS S31/S32
Floor Area.....: 126.0 sqft
Building Weight.: 130.0 lb/sqft
Windows Shaded..? N
Partitions Used.? N

LIGHTING
Overhead Fixture: Recessed
Lamp Wattage....: 2.00 W/sqft
Ballast Mult....: 1.25
Task Lighting...: 0.00 W/sqft

PEOPLE
Occupancy.....: 0 People
Activity Level..: Office Work
Sensible.....: 245.0 BTU/hr
Latent.....: 205.0 BTU/hr

OTHER LOADS
Equipment.....: 0.00 W/sqft
Misc. Sensible..: 0.0 BTU/hr
Misc. Latent....: 0.0 BTU/hr

SCHEDULES
Lighting....: BUILDING 642, FT DEVENS
Task Lights.: BUILDING 642, FT DEVENS
People.....: BUILDING 642, FT DEVENS
Equipment...: BUILDING 642, FT DEVENS
Misc. Sens..: BUILDING 642, FT DEVENS
Misc. Latent: BUILDING 642, FT DEVENS

INFILTRATION
Cooling.....: 0.00 CFM/sqft
Heating.....: 20.0 CFM
Typical.....: 10.0 CFM
When Fan On.? N

FLOOR
Type.....:Above Conditioned Space

WALL Exp	Gross Area (sqft)	WALL Type	WINDOW Type	WINDOW Qty	WINDOW Shade	WINDOW Type	WINDOW Qty	WINDOW Shade	Any Doors?
W	90.0	3	3	1	-	4	0	-	N

ROOF Exp	Slope (deg)	Gross Area (sqft)	ROOF Type	SKYLIGHT Type	SKYLIGHT Qty
HOR	-	126.0	2	1	0

No partition data for this space.

BUILDING 642

AIR SYSTEM INPUT DATA

AIR SYSTEM INPUT DATA

Name: BLDG 642, FIRST FLOOR HTG & CLG 12-09-94
Type: TERMINAL UNITS - 2-Pipe Fan Coils HAP v3.04
Prepared by: NEW ENGLAND DIVISION Page 1

****

1. SYSTEM NAME AND TYPE

Name.....: BLDG 642, FIRST FLOOR HTG & CLG
Type.....: TERMINAL UNITS - 2-Pipe Fan Coils
Number of Zones.: 28

==========

2. SYSTEM DESCRIPTION

COOLING SYSTEM DATA	
Supply Air.....:	55.0 F
Fan Cycled for Cooling.....?	Y
Coil Bypass Factor.....:	0.100
HEATING SYSTEM DATA	
Fan Cycled for Heating.....?	Y
Supply Air Temperature.....?	110.0 F
OUTDOOR VENTILATION DATA	
Common Ventilation System Used?	N
SAFETY FACTORS	
Sensible Cooling Factor.....:	20 %
Latent Cooling Factor.....:	20 %
Heating Factor.....:	20 %
OUTDOOR VENTILATION DATA	
Type of Control.....:	Constant Airflow Rate
Design Ventilation Airflow....:	0.0 CFM/person

==========

3. ZONE DATA

ZONE	1	(All Zones the Same)
T-Stat Occupied Cooling....(F):	75.0	
Unoccupied Cooling..(F):	95.0	
Occupied Heating....(F):	70.0	
Unoccupied Heating..(F):	50.0	
Throttling Range....(F):	3.0	
Zone Terminal Type.....:	Fan Coil	
Fan Total Static....(in.wg.):	0.25	
Fan Efficiency.....(%):	54	

==========

4. SCHEDULE DATA

HOURLY TSTAT SCHEDULES	00	01	02	03	04	05	06	07	08	09	10	11	12	13	14	15	16	17	18	19	20	21	22	23
Design Day.....								X	X	X	X	X	X	X	X	X	X							
Weekday.....								X	X	X	X	X	X	X	X	X	X							
Saturday.....								X	X	X	X	X	X	X	X	X	X							
Sunday.....								X	X	X	X	X	X	X	X	X	X							

Cooling Available During Unoccupied Period ? N

MONTHLY SCHEDULES	JAN	FEB	MAR	APR	MAY	JUN	JUL	AUG	SEP	OCT	NOV	DEC
Terminal Heating.....	XXX	XXX	XXX	XXX	XXX				XXX	XXX	XXX	XXX
Terminal Cooling.....						XXX	XXX	XXX				

AIR SYSTEM INPUT DATA

Name: BLDG 642, CONFERENCE ROOM
Type: CONSTANT VOLUME - Single Zone CAV
Prepared by: NEW ENGLAND DIVISION

12-09-94
HAP v3.04
Page 1

****

1. SYSTEM NAME AND TYPE

Name.....: BLDG 642, CONFERENCE ROOM
Type.....: CONSTANT VOLUME - Single Zone CAV
Number of Zones.: 1

==========

2. SYSTEM DESCRIPTION

COOLING SYSTEM DATA	
Is Central Cooling Used.....?	Y
Supply Air.....:	55.0 F
Coil Bypass Factor.....:	0.100
Fan Cycled for Cooling.....?	N
Supply Air Reset.....:	Greatest Demand
Maximum Reset Temperature.....:	65.0 F
HEATING SYSTEM DATA	
Is Central Heating Used.....?	Y
Fan Cycled for Heating.....?	N
Supply Air Reset.....:	Greatest Demand
Minimum Reset Temperature.....:	90.0 F
OUTDOOR VENTILATION DATA	
Type of Control.....:	Constant Airflow Rate
Design Ventilation Airflow....:	15.0 CFM/person
Dampers Open During Unocc Per.:	N
Damper Leak Rate.....:	0 %
SUPPLY DUCT DATA	
Duct Heat Gain.....:	0 %
Duct Leakage Rate.....:	0 %
RETURN PLENUM DATA	
Is a Return Plenum Used.....?	N
SUPPLY FAN DATA	
Fan Type.....:	Forward Curved
Configuration.....:	Draw-Thru
Fan Total Static.....:	0.50 in.wg.
Fan Efficiency.....:	54 %
RETURN FAN DATA	
Fan Type.....:	None
OUTDOOR AIR ECONOMIZER	
Outdoor Economizer Type.....:	Integrated Dry-Bulb
OA Upper Cutoff Temp.....:	100.0 F
OA Lower Cutoff Temp.....:	45.0 F
PREHEAT COIL	
Preheat Coil Used.....?	N
PRECOOL COIL	
Precool Coil Used.....?	N
HUMIDIFICATION	
Humidification System Used....?	N
DEHUMIDIFICATION	
Dehumidification System Used..?	N
VENTILATION HEAT RECLAIM	
Reclaim Unit Type.....:	None

==========

2. SYSTEM DESCRIPTION (CONTINUED)

SAFETY FACTORS

Sensible Cooling Factor.....:	20 %
Latent Cooling Factor.....:	20 %
Heating Factor.....:	20 %

3. ZONE DATA

ZONE	1	(All Zones the Same)
T-Stat Occupied Cooling....(F):	75.0	
Unoccupied Cooling..(F):	95.0	
Occupied Heating....(F):	70.0	
Unoccupied Heating..(F):	50.0	
Throttling Range....(F):	3.0	
Zone Heating Unit Type.....:	None	
Trip Temperature.....(F):	-	
Design Supply Temperature(F):	-	
Fan Total Static....(in.wg.):	-	
Fan Efficiency.....(%):	-	
Zone Terminal Type.....:	Diffuser	
Reheat Coil.....?	N	
Direct Exhaust Airflow...(CFM):	0.0	
Direct Exhaust Fan kW.....(kW):	0.0	

4. SCHEDULE DATA

HOURLY TSTAT SCHEDULES	00	01	02	03	04	05	06	07	08	09	10	11	12	13	14	15	16	17	18	19	20	21	22	23
Design Day.....								X	X	X	X	X	X	X	X	X	X							
Weekday.....								X	X	X	X	X	X	X	X	X	X							
Saturday.....								X	X	X	X	X	X	X	X	X	X							
Sunday.....								X	X	X	X	X	X	X	X	X	X							

Cooling Available During Unoccupied Period ? N

MONTHLY SCHEDULES	JAN	FEB	MAR	APR	MAY	JUN	JUL	AUG	SEP	OCT	NOV	DEC
Central Heating.....	XXX	XXX	XXX	XXX	XXX				XXX	XXX	XXX	XXX
Central Cooling.....						XXX	XXX	XXX				

AIR SYSTEM INPUT DATA

Name: BLDG 642, PHYSICAL FIT ROOM 117 — 12-09-94
Type: CONSTANT VOLUME - Single Zone CAV — HAP v3.04
Prepared by: NEW ENGLAND DIVISION — Page 1

****

1. SYSTEM NAME AND TYPE

Name.....: BLDG 642, PHYSICAL FIT ROOM 117
Type.....: CONSTANT VOLUME - Single Zone CAV
Number of Zones.: 1

2. SYSTEM DESCRIPTION

COOLING SYSTEM DATA	
Is Central Cooling Used.....?	Y
Supply Air.....:	55.0 F
Coil Bypass Factor.....:	0.100
Fan Cycled for Cooling.....?	N
Supply Air Reset.....:	Greatest Demand
Maximum Reset Temperature.....:	65.0 F
HEATING SYSTEM DATA	
Is Central Heating Used.....?	Y
Fan Cycled for Heating.....?	N
Supply Air Reset.....:	Greatest Demand
Minimum Reset Temperature.....:	90.0 F
OUTDOOR VENTILATION DATA	
Type of Control.....:	Constant Airflow Rate
Design Ventilation Airflow....:	15.0 CFM/person
Dampers Open During Unocc Per.:	N
Damper Leak Rate.....:	0 %
SUPPLY DUCT DATA	
Duct Heat Gain.....:	0 %
Duct Leakage Rate.....:	0 %
RETURN PLENUM DATA	
Is a Return Plenum Used.....?	N
SUPPLY FAN DATA	
Fan Type.....:	Forward Curved
Configuration.....:	Draw-Thru
Fan Total Static.....:	0.50 in.wg.
Fan Efficiency.....:	54 %
RETURN FAN DATA	
Fan Type.....:	None
OUTDOOR AIR ECONOMIZER	
Outdoor Economizer Type.....:	Integrated Dry-Bulb
OA Upper Cutoff Temp.....:	100.0 F
OA Lower Cutoff Temp.....:	45.0 F
PREHEAT COIL	
Preheat Coil Used.....?	N
PRECOOL COIL	
Precool Coil Used.....?	N
HUMIDIFICATION	
Humidification System Used....?	N
DEHUMIDIFICATION	
Dehumidification System Used..?	N
VENTILATION HEAT RECLAIM	
Reclaim Unit Type.....:	None

2. SYSTEM DESCRIPTION (CONTINUED)

SAFETY FACTORS

Sensible Cooling Factor.....:	20 %
Latent Cooling Factor.....:	20 %
Heating Factor.....:	20 %

3. ZONE DATA

ZONE	1	(All Zones the Same)
T-Stat Occupied Cooling....(F):	75.0	
Unoccupied Cooling..(F):	95.0	
Occupied Heating....(F):	70.0	
Unoccupied Heating..(F):	50.0	
Throttling Range....(F):	3.0	
Zone Heating Unit Type.....:	None	
Trip Temperature.....(F):	-	
Design Supply Temperature(F):	-	
Fan Total Static....(in.wg.):	-	
Fan Efficiency.....(%):	-	
Zone Terminal Type.....:	Diffuser	
Reheat Coil.....?	N	
Direct Exhaust Airflow...(CFM):	0.0	
Direct Exhaust Fan kW.....(kW):	0.0	

4. SCHEDULE DATA

HOURLY TSTAT SCHEDULES	00	01	02	03	04	05	06	07	08	09	10	11	12	13	14	15	16	17	18	19	20	21	22	23
Design Day.....								X	X	X	X	X	X	X	X	X	X							
Weekday.....								X	X	X	X	X	X	X	X	X	X							
Saturday.....								X	X	X	X	X	X	X	X	X	X							
Sunday.....								X	X	X	X	X	X	X	X	X	X							

Cooling Available During Unoccupied Period ? N

MONTHLY SCHEDULES	JAN	FEB	MAR	APR	MAY	JUN	JUL	AUG	SEP	OCT	NOV	DEC
Central Heating.....	XXX	XXX	XXX	XXX	XXX				XXX	XXX	XXX	XXX
Central Cooling.....						XXX	XXX	XXX				

AIR SYSTEM INPUT DATA

Name: BLDG 642, FIRST FLOOR RESTROOMS 12-10-94
Type: TERMINAL UNITS - Convective Htg and Clg HAP v3.04
Prepared by: NEW ENGLAND DIVISION Page 1

****

1. SYSTEM NAME AND TYPE

Name.....: BLDG 642, FIRST FLOOR RESTROOMS
Type.....: TERMINAL UNITS - Convective Htg and Clg
Number of Zones.: 1

2. SYSTEM DESCRIPTION

COOLING SYSTEM DATA
Is Cooling System Used.....? N
HEATING SYSTEM DATA
Is Heating System Used.....? Y
OUTDOOR VENTILATION DATA
Common Ventilation System Used? N
SAFETY FACTORS
Sensible Cooling Factor.....: 0 %
Latent Cooling Factor.....: 0 %
Heating Factor.....: 10 %

3. ZONE DATA

ZONE 1 (All Zones the Same)
T-Stat Zone Setpoint.....(F): 70.0

4. SCHEDULE DATA

HOURLY TSTAT SCHEDULES	00	01	02	03	04	05	06	07	08	09	10	11	12	13	14	15	16	17	18	19	20	21	22	23
Design Day.....								X	X	X	X	X	X	X	X	X	X							
Weekday.....								X	X	X	X	X	X	X	X	X	X							
Saturday.....								X	X	X	X	X	X	X	X	X	X							
Sunday.....								X	X	X	X	X	X	X	X	X	X							

MONTHLY SCHEDULES	JAN	FEB	MAR	APR	MAY	JUN	JUL	AUG	SEP	OCT	NOV	DEC
Terminal Heating.....	XXX	XXX	XXX	XXX	XXX				XXX	XXX	XXX	XXX

AIR SYSTEM INPUT DATA

Name: BLDG 642, SECOND FLOOR HEATING — 12-10-94
Type: TERMINAL UNITS - Convective Htg and Clg — HAP v3.04
Prepared by: NEW ENGLAND DIVISION — Page 1

****

1. SYSTEM NAME AND TYPE

Name.....: BLDG 642, SECOND FLOOR HEATING
Type.....: TERMINAL UNITS - Convective Htg and Clg
Number of Zones.: 2

2. SYSTEM DESCRIPTION

COOLING SYSTEM DATA	
Is Cooling System Used.....?	N
HEATING SYSTEM DATA	
Is Heating System Used.....?	Y
OUTDOOR VENTILATION DATA	
Common Ventilation System Used?	N
SAFETY FACTORS	
Sensible Cooling Factor.....:	0 %
Latent Cooling Factor.....:	0 %
Heating Factor.....:	20 %

3. ZONE DATA

ZONE	1 (All Zones the Same)
T-Stat Zone Setpoint.....(F):	70.0

4. SCHEDULE DATA

HOURLY TSTAT SCHEDULES	00	01	02	03	04	05	06	07	08	09	10	11	12	13	14	15	16	17	18	19	20	21	22	23
Design Day.....	X	X	X	X	X	X	X	X	X	X	X	X	X	X	X	X	X	X	X	X	X	X	X	X
Weekday.....	X	X	X	X	X	X	X	X	X	X	X	X	X	X	X	X	X	X	X	X	X	X	X	X
Saturday.....	X	X	X	X	X	X	X	X	X	X	X	X	X	X	X	X	X	X	X	X	X	X	X	X
Sunday.....	X	X	X	X	X	X	X	X	X	X	X	X	X	X	X	X	X	X	X	X	X	X	X	X

MONTHLY SCHEDULES	JAN	FEB	MAR	APR	MAY	JUN	JUL	AUG	SEP	OCT	NOV	DEC
Terminal Heating.....	XXX	XXX	XXX	XXX	XXX	XXX	XXX	XXX	XXX	XXX	XXX	XXX

AIR SYSTEM INPUT DATA

Name: BLDG 642, SECOND FLOOR HTG & CLG 12-10-94
Type: TERMINAL UNITS - 2-Pipe Fan Coils HAP v3.04
Prepared by: NEW ENGLAND DIVISION Page 1

****

1. SYSTEM NAME AND TYPE

Name.....: BLDG 642, SECOND FLOOR HTG & CLG
Type.....: TERMINAL UNITS - 2-Pipe Fan Coils
Number of Zones.: 28

==========

2. SYSTEM DESCRIPTION

COOLING SYSTEM DATA	
Supply Air.....:	55.0 F
Fan Cycled for Cooling.....?	Y
Coil Bypass Factor.....:	0.100
HEATING SYSTEM DATA	
Fan Cycled for Heating.....?	Y
Supply Air Temperature.....?	110.0 F
OUTDOOR VENTILATION DATA	
Common Ventilation System Used?	N
SAFETY FACTORS	
Sensible Cooling Factor.....:	20 %
Latent Cooling Factor.....:	20 %
Heating Factor.....:	20 %
OUTDOOR VENTILATION DATA	
Type of Control.....:	Constant Airflow Rate
Design Ventilation Airflow....:	0.0 CFM/person

==========

3. ZONE DATA

ZONE	1	(All Zones the Same)
T-Stat Occupied Cooling....(F):	75.0	
Unoccupied Cooling..(F):	95.0	
Occupied Heating....(F):	70.0	
Unoccupied Heating..(F):	50.0	
Throttling Range....(F):	3.0	
Zone Terminal Type.....:	Fan Coil	
Fan Total Static....(in.wg.):	0.25	
Fan Efficiency.....(%):	54	

==========

AIR SYSTEM INPUT DATA

Name: BLDG 642, SECOND FLOOR HTG & CLG — 12-10-94
Type: TERMINAL UNITS - 2-Pipe Fan Coils — HAP v3.04
Prepared by: NEW ENGLAND DIVISION — Page 2

****

4. SCHEDULE DATA

HOURLY TSTAT SCHEDULES	00	01	02	03	04	05	06	07	08	09	10	11	12	13	14	15	16	17	18	19	20	21	22	23
Design Day.....								X	X	X	X	X	X	X	X	X	X							
Weekday.....								X	X	X	X	X	X	X	X	X	X							
Saturday.....								X	X	X	X	X	X	X	X	X	X							
Sunday.....								X	X	X	X	X	X	X	X	X	X							

Cooling Available During Unoccupied Period ? N

MONTHLY SCHEDULES	JAN	FEB	MAR	APR	MAY	JUN	JUL	AUG	SEP	OCT	NOV	DEC
Terminal Heating.....	XXX	XXX	XXX	XXX	XXX				XXX	XXX	XXX	XXX
Terminal Cooling.....						XXX	XXX	XXX				

AIR SYSTEM INPUT DATA

Name: BLDG 642, THIRD FLOOR HEATING 12-10-94
Type: TERMINAL UNITS - Convective Htg and Clg HAP v3.04
Prepared by: NEW ENGLAND DIVISION Page 1

****

1. SYSTEM NAME AND TYPE

Name.....: BLDG 642, THIRD FLOOR HEATING
Type.....: TERMINAL UNITS - Convective Htg and Clg
Number of Zones.: 4

2. SYSTEM DESCRIPTION

COOLING SYSTEM DATA
Is Cooling System Used.....? N
HEATING SYSTEM DATA
Is Heating System Used.....? Y
OUTDOOR VENTILATION DATA
Common Ventilation System Used? N
SAFETY FACTORS
Sensible Cooling Factor.....: 0 %
Latent Cooling Factor.....: 0 %
Heating Factor.....: 20 %

3. ZONE DATA

ZONE 1 (All Zones the Same)
T-Stat Zone Setpoint.....(F): 70.0

4. SCHEDULE DATA

HOURLY TSTAT SCHEDULES	0	0	0	0	0	0	0	0	0	0	1	1	1	1	1	1	1	1	1	1	2	2	2	2
	0	1	2	3	4	5	6	7	8	9	0	1	2	3	4	5	6	7	8	9	0	1	2	3
Design Day.....	X	X	X	X	X	X	X	X	X	X	X	X	X	X	X	X	X	X	X	X	X	X	X	X
Weekday.....	X	X	X	X	X	X	X	X	X	X	X	X	X	X	X	X	X	X	X	X	X	X	X	X
Saturday.....	X	X	X	X	X	X	X	X	X	X	X	X	X	X	X	X	X	X	X	X	X	X	X	X
Sunday.....	X	X	X	X	X	X	X	X	X	X	X	X	X	X	X	X	X	X	X	X	X	X	X	X

MONTHLY SCHEDULES	JAN	FEB	MAR	APR	MAY	JUN	JUL	AUG	SEP	OCT	NOV	DEC
Terminal Heating.....	XXX	XXX	XXX	XXX	XXX	XXX	XXX	XXX	XXX	XXX	XXX	XXX

AIR SYSTEM INPUT DATA

Name: BLDG 642, THIRD FLOOR HTG & CLG
Type: TERMINAL UNITS - 2-Pipe Fan Coils
Prepared by: NEW ENGLAND DIVISION

12-10-94
HAP v3.04
Page 1

****

1. SYSTEM NAME AND TYPE

Name.....: BLDG 642, THIRD FLOOR HTG & CLG
Type.....: TERMINAL UNITS - 2-Pipe Fan Coils
Number of Zones.: 27

2. SYSTEM DESCRIPTION

COOLING SYSTEM DATA	
Supply Air.....:	55.0 F
Fan Cycled for Cooling.....?	Y
Coil Bypass Factor.....:	0.100
HEATING SYSTEM DATA	
Fan Cycled for Heating.....?	Y
Supply Air Temperature.....?	110.0 F
OUTDOOR VENTILATION DATA	
Common Ventilation System Used?	N
SAFETY FACTORS	
Sensible Cooling Factor.....:	20 %
Latent Cooling Factor.....:	20 %
Heating Factor.....:	20 %
OUTDOOR VENTILATION DATA	
Type of Control.....:	Constant Airflow Rate
Design Ventilation Airflow....:	0.0 CFM/person

3. ZONE DATA

ZONE	1	(All Zones the Same)
T-Stat Occupied Cooling....(F):	75.0	
Unoccupied Cooling..(F):	95.0	
Occupied Heating....(F):	70.0	
Unoccupied Heating..(F):	50.0	
Throttling Range....(F):	3.0	
Zone Terminal Type.....:	Fan Coil	
Fan Total Static....(in.wg.):	0.25	
Fan Efficiency.....(%):	54	

4. SCHEDULE DATA

HOURLY TSTAT SCHEDULES	00	01	02	03	04	05	06	07	08	09	10	11	12	13	14	15	16	17	18	19	20	21	22	23
Design Day.....								X	X	X	X	X	X	X	X	X	X							
Weekday.....								X	X	X	X	X	X	X	X	X	X							
Saturday.....								X	X	X	X	X	X	X	X	X	X							
Sunday.....								X	X	X	X	X	X	X	X	X	X							

Cooling Available During Unoccupied Period ? N

MONTHLY SCHEDULES	JAN	FEB	MAR	APR	MAY	JUN	JUL	AUG	SEP	OCT	NOV	DEC
Terminal Heating.....	XXX	XXX	XXX	XXX	XXX				XXX	XXX	XXX	XXX
Terminal Cooling.....						XXX	XXX	XXX				

AIR SYSTEM INPUT DATA

Name: BLDG 642-FIRST FLOOR (MAU 642-1) 12-09-94
Type: CONSTANT VOLUME - Tempering System HAP v3.04
Prepared by: NEW ENGLAND DIVISION Page 1

****

1. SYSTEM NAME AND TYPE

Name.....: BLDG 642-FIRST FLOOR (MAU 642-1)
Type.....: CONSTANT VOLUME - Tempering System
Number of Zones.: 1

2. SYSTEM DESCRIPTION

OUTDOOR VENTILATION DATA
Design Ventilation Airflow....: 700.0 CFM
SUPPLY FAN DATA
Fan Type.....: Forward Curved
Configuration.....: Draw-Thru
Fan Total Static.....: 0.50 in.wg.
Fan Efficiency.....: 54 %
HEATING COIL
Use Heating Coil.....? Y
Setpoint.....: 70.0 F
COOLING COIL
Use Cooling Coil.....? Y
Setpoint.....: 75.0 F

4. SCHEDULE DATA

HOURLY TSTAT SCHEDULES	00	01	02	03	04	05	06	07	08	09	10	11	12	13	14	15	16	17	18	19	20	21	22	23
Design Day.....								X	X	X	X	X	X	X	X	X	X							
Weekday.....								X	X	X	X	X	X	X	X	X	X							
Saturday.....								X	X	X	X	X	X	X	X	X	X							
Sunday.....								X	X	X	X	X	X	X	X	X	X							

MONTHLY SCHEDULES	JAN	FEB	MAR	APR	MAY	JUN	JUL	AUG	SEP	OCT	NOV	DEC
Central Heating.....	XXX	XXX	XXX	XXX	XXX				XXX	XXX	XXX	XXX
Central Cooling.....						XXX	XXX	XXX				

AIR SYSTEM INPUT DATA

Name: BLDG 642-FIRST FLOOR (MAU 642-2) 12-09-94
Type: CONSTANT VOLUME - Tempering System HAP v3.04
Prepared by: NEW ENGLAND DIVISION Page 1

****

1. SYSTEM NAME AND TYPE

Name.....: BLDG 642-FIRST FLOOR (MAU 642-2)
Type.....: CONSTANT VOLUME - Tempering System
Number of Zones.: 1

2. SYSTEM DESCRIPTION

OUTDOOR VENTILATION DATA
Design Ventilation Airflow....: 660.0 CFM
SUPPLY FAN DATA
Fan Type.....: Forward Curved
Configuration.....: Draw-Thru
Fan Total Static.....: 0.50 in.wg.
Fan Efficiency.....: 54 %
HEATING COIL
Use Heating Coil.....? Y
Setpoint.....: 70.0 F
COOLING COIL
Use Cooling Coil.....? Y
Setpoint.....: 75.0 F

4. SCHEDULE DATA

HOURLY TSTAT SCHEDULES	00	01	02	03	04	05	06	07	08	09	10	11	12	13	14	15	16	17	18	19	20	21	22	23
Design Day.....								X	X	X	X	X	X	X	X	X	X							
Weekday.....								X	X	X	X	X	X	X	X	X	X							
Saturday.....								X	X	X	X	X	X	X	X	X	X							
Sunday.....								X	X	X	X	X	X	X	X	X	X							

MONTHLY SCHEDULES	JAN	FEB	MAR	APR	MAY	JUN	JUL	AUG	SEP	OCT	NOV	DEC
Central Heating.....	XXX	XXX	XXX	XXX	XXX				XXX	XXX	XXX	XXX
Central Cooling.....						XXX	XXX	XXX				

AIR SYSTEM INPUT DATA

Name: BLDG 642-SECOND FL (MAU 642-3)
Type: CONSTANT VOLUME - Tempering System
Prepared by: NEW ENGLAND DIVISION

12-09-94
HAP v3.04
Page 1

****

1. SYSTEM NAME AND TYPE

Name.....: BLDG 642-SECOND FL (MAU 642-3)
Type.....: CONSTANT VOLUME - Tempering System
Number of Zones.: 1

2. SYSTEM DESCRIPTION

OUTDOOR VENTILATION DATA	
Design Ventilation Airflow....:	770.0 CFM
SUPPLY FAN DATA	
Fan Type.....:	Forward Curved
Configuration.....:	Draw-Thru
Fan Total Static.....:	0.50 in.wg.
Fan Efficiency.....:	54 %
HEATING COIL	
Use Heating Coil.....?	Y
Setpoint.....:	70.0 F
COOLING COIL	
Use Cooling Coil.....?	Y
Setpoint.....:	75.0 F

4. SCHEDULE DATA

HOURLY TSTAT SCHEDULES	00	01	02	03	04	05	06	07	08	09	10	11	12	13	14	15	16	17	18	19	20	21	22	23
Design Day.....								X	X	X	X	X	X	X	X	X								
Weekday.....								X	X	X	X	X	X	X	X	X								
Saturday.....								X	X	X	X	X	X	X	X	X								
Sunday.....								X	X	X	X	X	X	X	X	X								

MONTHLY SCHEDULES	JAN	FEB	MAR	APR	MAY	JUN	JUL	AUG	SEP	OCT	NOV	DEC
Central Heating.....	XXX	XXX	XXX	XXX	XXX				XXX	XXX	XXX	XXX
Central Cooling.....						XXX	XXX	XXX				

AIR SYSTEM INPUT DATA

Name: BLDG 642-SECOND FL (MAU 642-4) 12-09-94
Type: CONSTANT VOLUME - Tempering System HAP v3.04
Prepared by: NEW ENGLAND DIVISION Page 1

****

1. SYSTEM NAME AND TYPE

Name.....: BLDG 642-SECOND FL (MAU 642-4)
Type.....: CONSTANT VOLUME - Tempering System
Number of Zones.: 1

2. SYSTEM DESCRIPTION

OUTDOOR VENTILATION DATA
Design Ventilation Airflow....: 960.0 CFM
SUPPLY FAN DATA
Fan Type.....: Forward Curved
Configuration.....: Draw-Thru
Fan Total Static.....: 0.50 in.wg.
Fan Efficiency.....: 54 %
HEATING COIL
Use Heating Coil.....? Y
Setpoint.....: 70.0 F
COOLING COIL
Use Cooling Coil.....? Y
Setpoint.....: 75.0 F

4. SCHEDULE DATA

HOURLY TSTAT SCHEDULES	00	01	02	03	04	05	06	07	08	09	10	11	12	13	14	15	16	17	18	19	20	21	22	23
Design Day.....								X	X	X	X	X	X	X	X	X	X							
Weekday.....								X	X	X	X	X	X	X	X	X	X							
Saturday.....								X	X	X	X	X	X	X	X	X	X							
Sunday.....								X	X	X	X	X	X	X	X	X	X							

MONTHLY SCHEDULES	JAN	FEB	MAR	APR	MAY	JUN	JUL	AUG	SEP	OCT	NOV	DEC
Central Heating.....	XXX	XXX	XXX	XXX	XXX				XXX	XXX	XXX	XXX
Central Cooling.....						XXX	XXX	XXX				

AIR SYSTEM INPUT DATA

Name: BLDG 642 PHYSICAL FIT MAU 642-5 — 12-10-94
Type: CONSTANT VOLUME - Tempering System — HAP v3.04
Prepared by: NEW ENGLAND DIVISION — Page 1

****

1. SYSTEM NAME AND TYPE

Name.....: BLDG 642 PHYSICAL FIT MAU 642-5
Type.....: CONSTANT VOLUME - Tempering System
Number of Zones.: 1

2. SYSTEM DESCRIPTION

OUTDOOR VENTILATION DATA
Design Ventilation Airflow....: 1000.0 CFM
SUPPLY FAN DATA
Fan Type.....: Forward Curved
Configuration.....: Draw-Thru
Fan Total Static.....: 0.50 in.wg.
Fan Efficiency.....: 54 %
HEATING COIL
Use Heating Coil.....? Y
Setpoint.....: 70.0 F
COOLING COIL
Use Cooling Coil.....? N

4. SCHEDULE DATA

HOURLY TSTAT SCHEDULES	00	01	02	03	04	05	06	07	08	09	10	11	12	13	14	15	16	17	18	19	20	21	22	23
Design Day.....								X	X	X	X	X	X	X	X	X	X							
Weekday.....								X	X	X	X	X	X	X	X	X	X							
Saturday.....								X	X	X	X	X	X	X	X	X	X							
Sunday.....								X	X	X	X	X	X	X	X	X	X							

MONTHLY SCHEDULES	JAN	FEB	MAR	APR	MAY	JUN	JUL	AUG	SEP	OCT	NOV	DEC
Central Heating.....	XXX	XXX	XXX	XXX	XXX				XXX	XXX	XXX	XXX

AIR SYSTEM INPUT DATA

Name: BLDG 642 THIRD FLOOR (MAU 642-6) 12-09-94
Type: CONSTANT VOLUME - Tempering System HAP v3.04
Prepared by: NEW ENGLAND DIVISION Page 1

****

1. SYSTEM NAME AND TYPE

Name.....: BLDG 642 THIRD FLOOR (MAU 642-6)
Type.....: CONSTANT VOLUME - Tempering System
Number of Zones.: 1

2. SYSTEM DESCRIPTION

OUTDOOR VENTILATION DATA
Design Ventilation Airflow....: 870.0 CFM
SUPPLY FAN DATA
Fan Type.....: Forward Curved
Configuration.....: Draw-Thru
Fan Total Static.....: 0.50 in.wg.
Fan Efficiency.....: 54 %
HEATING COIL
Use Heating Coil.....? Y
Setpoint.....: 70.0 F
COOLING COIL
Use Cooling Coil.....? Y
Setpoint.....: 75.0 F

4. SCHEDULE DATA

HOURLY TSTAT SCHEDULES	00	01	02	03	04	05	06	07	08	09	10	11	12	13	14	15	16	17	18	19	20	21	22	23
Design Day.....								X	X	X	X	X	X	X	X	X	X							
Weekday.....								X	X	X	X	X	X	X	X	X	X							
Saturday.....								X	X	X	X	X	X	X	X	X	X							
Sunday.....								X	X	X	X	X	X	X	X	X	X							

MONTHLY SCHEDULES	JAN	FEB	MAR	APR	MAY	JUN	JUL	AUG	SEP	OCT	NOV	DEC
Central Heating.....	XXX	XXX	XXX	XXX	XXX				XXX	XXX	XXX	XXX
Central Cooling.....						XXX	XXX	XXX				

AIR SYSTEM INPUT DATA

Name: BLDG 642 THIRD FLOOR (MAU 642-7)
Type: CONSTANT VOLUME - Tempering System
Prepared by: NEW ENGLAND DIVISION

12-09-94
HAP v3.04
Page 1

****

1. SYSTEM NAME AND TYPE

Name.....: BLDG 642 THIRD FLOOR (MAU 642-7)
Type.....: CONSTANT VOLUME - Tempering System
Number of Zones.: 1

2. SYSTEM DESCRIPTION

OUTDOOR VENTILATION DATA	
Design Ventilation Airflow....:	870.0 CFM
SUPPLY FAN DATA	
Fan Type.....:	Forward Curved
Configuration.....:	Draw-Thru
Fan Total Static.....:	0.50 in.wg.
Fan Efficiency.....:	54 %
HEATING COIL	
Use Heating Coil.....?	Y
Setpoint.....:	70.0 F
COOLING COIL	
Use Cooling Coil.....?	Y
Setpoint.....:	75.0 F

4. SCHEDULE DATA

HOURLY TSTAT SCHEDULES	00	01	02	03	04	05	06	07	08	09	10	11	12	13	14	15	16	17	18	19	20	21	22	23
Design Day.....								X	X	X	X	X	X	X	X	X	X							
Weekday.....								X	X	X	X	X	X	X	X	X	X							
Saturday.....								X	X	X	X	X	X	X	X	X	X							
Sunday.....								X	X	X	X	X	X	X	X	X	X							

MONTHLY SCHEDULES	JAN	FEB	MAR	APR	MAY	JUN	JUL	AUG	SEP	OCT	NOV	DEC
Central Heating.....	XXX	XXX	XXX	XXX	XXX				XXX	XXX	XXX	XXX
Central Cooling.....						XXX	XXX	XXX				

BUILDING 642

AIR SYSTEM SIZING SUMMARY

AIR SYSTEM SIZING SUMMARY

Air System.: BLDG 642, FIRST FLOOR HTG & CLG 10-04-94
Weather....: Fort Devens, Massachusetts HAP v3.04a
Prepared By: NEW ENGLAND DIVISION

****

AIR SYSTEM INFORMATION

System Type.....: (2P-FC)
Number of Zones.....: 28
Floor Area.....: 10868 sqft

TERMINAL SYSTEM SIZING SUMMARY

Air System.: BLDG 642, FIRST FLOOR HTG & CLG 10-04-94
Weather....: Fort Devens, Massachusetts HAP v3.04a
Prepared By: NEW ENGLAND DIVISION

****

TABLE 1: TERMINAL UNIT SIZING DATA

Zone Name	COOLING COIL Sens. (MBH)	COOLING COIL Total (MBH)	COOLING COIL Water (gpm)	HEATING COIL Load (MBH)	HEATING COIL Water (gpm)	Air Flow (CFM)
OFFICE 101.....	9.4	10.0	2.00	7.8	0.78	346
OFFICE 102.....	14.5	15.1	3.02	16.9	1.70	567
OFFICE 103.....	7.4	7.8	1.56	10.7	1.07	289
OFFICE 104.....	5.3	5.7	1.14	6.8	0.68	204
OFFICE 105.....	6.0	6.5	1.30	8.0	0.80	232
OFFICE 106.....	5.7	6.1	1.23	7.4	0.74	218
OFFICE 107.....	13.4	14.2	2.85	18.1	1.81	518
OFFICE 108.....	9.5	9.9	1.98	10.6	1.06	366
OFFICE 109.....	13.4	14.2	2.83	10.3	1.03	488
BREAK ROOM 111.....	11.5	12.3	2.45	8.0	0.80	388
CORRIDOR C14 & C16.....	3.0	3.4	0.67	4.3	0.43	118
SUPPLY SERGEANT 120.....	11.7	12.3	2.45	12.7	1.27	463
OFFICE 121.....	8.7	9.1	1.82	7.3	0.73	301
OFFICES 125 & 126.....	3.6	4.1	0.82	2.0	0.20	126
OFFICE 129.....	8.4	9.2	1.85	8.3	0.83	308
OFFICE 130.....	6.9	7.3	1.47	10.1	1.01	268
OFFICES 131, 132 & 133..	19.5	20.4	4.08	15.7	1.57	724
OFF 134, 135, 136 & 137.	39.3	41.1	8.22	31.4	3.14	1454
OFFICE 138.....	16.1	17.4	3.48	20.5	2.05	618
VESTIBULE 140 & 146.....	4.9	5.4	1.07	6.7	0.67	190
MAIL 141.....	10.5	10.5	2.10	7.6	0.76	399
OFFICE 142.....	11.4	11.8	2.36	8.0	0.80	426
OFFICE 143.....	34.0	35.1	7.03	23.8	2.39	1273
ELECTRICAL ROOM 144.....	7.6	7.9	1.58	5.3	0.53	284
TELEPHONE 145.....	3.3	3.3	0.67	2.4	0.24	126
CORRIDORS C11 & C18.....	5.7	6.7	1.35	4.7	0.47	212
CORRIDORS C12 & C19.....	5.7	6.7	1.33	4.1	0.41	210
CORRIDOR C15.....	4.6	5.4	1.08	2.0	0.20	162

AIR SYSTEM DESIGN LOAD SUMMARY

Air System.: BLDG 642, FIRST FLOOR HTG & CLG
Weather....: Fort Devens, Massachusetts
Prepared By: NEW ENGLAND DIVISION

10-04-94
HAP v3.04a

****

COOLING AT.....: Aug @ 1600
COOLING OA DB/RH..: 88.3 F / 45 %

HEATING AT.....: Winter Design
HEATING OA DB...: 1.0 F

ZONE LOADS	Details	COOLING Sensible (BTU/hr)	COOLING Latent (BTU/hr)	HEATING Sensible (BTU/hr)
Solar Loads	1487 sqft	57356	-	-
Wall Transmission	5941 sqft	48944	-	122500
Roof Transmission	0 sqft	0	-	0
Glass Transmission	1487 sqft	8077	-	60166
Skylight Transmission	0 sqft	0	-	0
Door Transmission	207 sqft	576	-	4287
Floor Transmission	10614 sqft	0	-	28173
Partitions	0 sqft	0	-	0
Ceiling	0 sqft	0	-	0
Lighting	2.00 W/sqft	61294	-	-
Equipment	0.00 W/sqft	0	-	-
People	76 people	15452	16564	-
Infiltration		0	0	0
Miscellaneous		0	0	-
Safety Factor	20/ 20/ 20 %	38340	3313	43025
>>Total Zone Loads (1)		230039	19877	258152
Zone Conditioning (2)		286444	19877	282536
Plenum Wall Load	0 %	0	-	-
Plenum Roof Load	0 %	0	-	-
Plenum Lighting Load	0 %	0	-	-
Return Fan Load		0	-	0
Ventilation Load	0 CFM	0	0	0
Supply Fan Load	0 CFM	0	-	0
Space Fan Coil Fans		2080	-	-1317
Duct Heat Gain/Loss	0 %	0	-	0
>>Total System Loads		288524	19877	281218
Terminal Unit Cooling		288524	17646	0
Terminal Unit Heating		0	-	281218
Precool Coil		0	0	0
Preheat Coil		0	-	0
Central Reheat Coil		0	-	-
Humidification Load		0	0	-
Terminal Reheat Coils		0	-	0
Space/Skin Heat Coils		0	-	0
>>Total Conditioning		288524	17646	281218

Notes: (1) Zone loads calculated at occupied thermostat setpoint.
(2) Zone conditioning based on heat extraction analysis.
(3) In the COOLING column, positive loads indicate heat gains, while positive coil loads indicate system heat removal.
(4) In the HEATING column, positive loads indicate heat loss, while positive coil loads indicate system heat addition.

AIR SYSTEM SIZING SUMMARY

Air System.: BLDG 642, CONFERENCE ROOM 10-04-94
Weather....: Fort Devens, Massachusetts HAP v3.04a
Prepared By: NEW ENGLAND DIVISION Page 1 of 1

****

AIR SYSTEM INFORMATION

System Type.....: (SZ CAV)
Number of Zones.....: 1
Floor Area.....: 2702 sqft

COOLING COIL SIZING DATA

Total coil load (Tons)...:	10.0	Load occurs at...:	Jul 1100
Sensible coil load (Tons):	5.6	OA DB/RH (F/%)...:	79.6/ 59.9
Coil CFM at Jul 1100.....:	2540	Entering Db/Wb...:	79.6/ 69.3 F
Max coil airflow (CFM)...:	2540	Leaving Db/Wb....:	54.7/ 53.9 F
Design supply temp (F)...:	55.0	Coil ADP.....:	51.9 F
sqft/Tons.....:	271.0	Bypass factor....:	0.100
BTU/hr/sqft.....:	44.3	Resulting RH.....:	42 %
Water gpm @ 10F rise.....:	23.94		

CENTRAL HEATING COIL SIZING DATA

Max coil load (BTU/hr)...:	117790	BTU/hr/sqft.....:	43.6
Coil airflow (CFM).....:	2540	Water gpm @ 20F drop:	11.79
Design supply temp (F)...:	82.0		

SUPPLY FAN SIZING DATA

Actual airflow (CFM).....:	2540
Standard airflow (CFM)...:	2515

VENTILATION AIR DATA

Airflow (CFM).....:	1125	CFM/person.....:	15.00
CFM/sqft.....:	0.42		

ZONE SIZING SUMMARY

Air System.: BLDG 642, CONFERENCE ROOM 10-04-94
Weather....: Fort Devens, Massachusetts HAP v3.04a
Prepared By: NEW ENGLAND DIVISION Page 1

****

TABLE 1: ZONE SIZING DATA

Zone Name	Cooling Sensible (MBH)	Air Flow (CFM)	Design Mon Hour	Heating Load (MBH)	Water Rate (gpm)
CONFERENCE ROOM 114.....	54.3	2540	Aug 1400	32.7	3.28

Note: Zone loads calculated at occupied thermostat setpoint.

TABLE 2: SPACE AIRFLOWS (Based On Zone CFM/sqft)

Zone Name	Zone Airflow (CFM/sqft)	Space Name	Space Airflow (CFM)
CONFERENCE ROOM 114.....	0.94	BLDG 642, CONFERENCE 114.	2540

AIR SYSTEM DESIGN LOAD SUMMARY

Air System.: BLDG 642, CONFERENCE ROOM — 10-04-94
Weather....: Fort Devens, Massachusetts — HAP v3.04a
Prepared By: NEW ENGLAND DIVISION — Page 1 of 1

****

COOLING AT.....: Jul @ 1100 — HEATING AT.....: Winter Design
COOLING OA DB/RH..: 79.6 F / 60 % — HEATING OA DB...: 1.0 F

ZONE LOADS	Details	COOLING Sensible (BTU/hr)	COOLING Latent (BTU/hr)	HEATING Sensible (BTU/hr)
Solar Loads	452 sqft	14027	-	-
Wall Transmission	218 sqft	493	-	4495
Roof Transmission	0 sqft	0	-	0
Glass Transmission	452 sqft	715	-	18144
Skylight Transmission	0 sqft	0	-	0
Door Transmission	20 sqft	16	-	416
Floor Transmission	2702 sqft	0	-	4223
Partitions	0 sqft	0	-	0
Ceiling	0 sqft	0	-	0
Lighting	2.00 W/sqft	14565	-	-
Equipment	0.00 W/sqft	0	-	-
People	60 people	10134	7200	-
Infiltration		0	0	0
Miscellaneous		0	0	-
Safety Factor	20/ 20/ 20 %	7990	1440	5455
>>Total Zone Loads (1)		47940	8640	32733
Zone Conditioning (2)		69852	8640	38069
Plenum Wall Load	0 %	0	-	-
Plenum Roof Load	0 %	0	-	-
Plenum Lighting Load	0 %	0	-	-
Return Fan Load		0	-	0
Ventilation Load	2540 CFM	-3021	43217	80663
Supply Fan Load	2540 CFM	941	-	-941
Space Fan Coil Fans		0	-	0
Duct Heat Gain/Loss	0 %	0	-	0
>>Total System Loads		67772	51857	117790
Central Cooling Coil		67772	51857	0
Central Heating Coil		0	-	117790
Precool Coil		0	0	0
Preheat Coil		0	-	0
Central Reheat Coil		0	-	-
Humidification Load		0	0	-
Terminal Reheat Coils		0	-	0
Space/Skin Heat Coils		0	-	0
>>Total Conditioning		67772	51857	117790

Notes: (1) Zone loads calculated at occupied thermostat setpoint.
(2) Zone conditioning based on heat extraction analysis.
(3) In the COOLING column, positive loads indicate heat gains, while positive coil loads indicate system heat removal.
(4) In the HEATING column, positive loads indicate heat loss, while positive coil loads indicate system heat addition.

AIR SYSTEM SIZING SUMMARY

Air System.: BLDG 642, PHYSICAL FIT ROOM 117 — 10-04-94
Weather....: Fort Devens, Massachusetts — HAP v3.04a
Prepared By: NEW ENGLAND DIVISION — Page 1 of 1

****

AIR SYSTEM INFORMATION

System Type.....:	(SZ CAV)
Number of Zones.....:	1
Floor Area.....:	1759 sqft

COOLING COIL SIZING DATA

Total coil load (Tons)...:	5.2	Load occurs at...:	Jul 1500
Sensible coil load (Tons):	3.5	OA DB/RH (F/%)...:	89.0/ 44.4
Coil CFM at Jul 1500.....:	1956	Entering Db/Wb...:	78.7/ 67.6 F
Max coil airflow (CFM)...:	1956	Leaving Db/Wb....:	58.4/ 57.4 F
Design supply temp (F)...:	55.0	Coil ADP.....:	56.1 F
sqft/Tons.....:	339.7	Bypass factor....:	0.100
BTU/hr/sqft.....:	35.3	Resulting RH.....:	59 %
Water gpm @ 10F rise.....:	12.44		

CENTRAL HEATING COIL SIZING DATA

Max coil load (BTU/hr)...:	105084	BTU/hr/sqft.....:	59.7
Coil airflow (CFM).....:	1956	Water gpm @ 20F drop:	10.51
Design supply temp (F)...:	110.6		

SUPPLY FAN SIZING DATA

Actual airflow (CFM).....:	1956
Standard airflow (CFM)...:	1937

VENTILATION AIR DATA

Airflow (CFM).....:	300	CFM/person.....:	15.00
CFM/sqft.....:	0.17		

ZONE SIZING SUMMARY

Air System.: BLDG 642, PHYSICAL FIT ROOM 117 — 10-04-94
Weather....: Fort Devens, Massachusetts — HAP v3.04a
Prepared By: NEW ENGLAND DIVISION — Page 1

****

TABLE 1: ZONE SIZING DATA

Zone Name	Cooling Sensible (MBH)	Air Flow (CFM)	Design Mon Hour	Heating Load (MBH)	Water Rate (gpm)
PHYSICAL FIT ROOM 117...	41.8	1956	Jul 1500	84.9	8.50

Note: Zone loads calculated at occupied thermostat setpoint.

TABLE 2: SPACE AIRFLOWS (Based On Zone CFM/sqft)

Zone Name	Zone Airflow (CFM/sqft)	Space Name	Space Airflow (CFM)
PHYSICAL FIT ROOM 117...	1.11	BLDG 642, PHYS FIT 117...	1956

AIR SYSTEM DESIGN LOAD SUMMARY

Air System.: BLDG 642, PHYSICAL FIT ROOM 117 — 10-04-94
Weather....: Fort Devens, Massachusetts — HAP v3.04a
Prepared By: NEW ENGLAND DIVISION —

****

COOLING AT.....: Jul @ 1500 — HEATING AT.....: Winter Design
COOLING OA DB/RH..: 89.0 F / 44 % — HEATING OA DB...: 1.0 F

ZONE LOADS	Details	COOLING Sensible (BTU/hr)	COOLING Latent (BTU/hr)	HEATING Sensible (BTU/hr)
Solar Loads	156 sqft	5236	-	-
Wall Transmission	609 sqft	4013	-	12553
Roof Transmission	0 sqft	0	-	0
Glass Transmission	156 sqft	877	-	6323
Skylight Transmission	0 sqft	0	-	0
Door Transmission	0 sqft	0	-	0
Floor Transmission	1759 sqft	8418	-	51899
Partitions	0 sqft	0	-	0
Ceiling	0 sqft	0	-	0
Lighting	2.00 W/sqft	9841	-	-
Equipment	0.00 W/sqft	0	-	-
People	16 people	6485	14800	-
Infiltration		0	0	0
Miscellaneous		0	0	-
Safety Factor	20/ 20/ 20 %	6974	2960	14155
>>Total Zone Loads (1)		41844	17760	84930
Zone Conditioning (2)		37989	17760	84565
Plenum Wall Load	0 %	0	-	-
Plenum Roof Load	0 %	0	-	-
Plenum Lighting Load	0 %	0	-	-
Return Fan Load		0	-	0
Ventilation Load	300 CFM	3886	1775	21244
Supply Fan Load	1956 CFM	725	-	-725
Space Fan Coil Fans		0	-	0
Duct Heat Gain/Loss	0 %	0	-	0
>>Total System Loads		42600	19535	105084
Central Cooling Coil		42600	19542	0
Central Heating Coil		0	-	105084
Precool Coil		0	0	0
Preheat Coil		0	-	0
Central Reheat Coil		0	-	-
Humidification Load		0	0	-
Terminal Reheat Coils		0	-	0
Space/Skin Heat Coils		0	-	0
>>Total Conditioning		42600	19542	105084

Notes: (1) Zone loads calculated at occupied thermostat setpoint.
(2) Zone conditioning based on heat extraction analysis.
(3) In the COOLING column, positive loads indicate heat gains, while positive coil loads indicate system heat removal.
(4) In the HEATING column, positive loads indicate heat loss, while positive coil loads indicate system heat addition.

AIR SYSTEM SIZING SUMMARY

Air System.: BLDG 642, FIRST FLOOR HEATING 10-04-94
Weather....: Fort Devens, Massachusetts HAP v3.04a
Prepared By: NEW ENGLAND DIVISION Page 1 of 1

****

AIR SYSTEM INFORMATION

System Type.....: (2P-FC)
Number of Zones.....: 7
Floor Area.....: 1191 sqft

TERMINAL SYSTEM SIZING SUMMARY

Air System.: BLDG 642, FIRST FLOOR HEATING — 10-04-94
Weather....: Fort Devens, Massachusetts — HAP v3.04a
Prepared By: NEW ENGLAND DIVISION — Page 1

****

TABLE 1: TERMINAL UNIT SIZING DATA

Zone Name	COOLING COIL Sens. (MBH)	COOLING COIL Total (MBH)	COOLING COIL Water (gpm)	HEATING COIL Load (MBH)	HEATING COIL Water (gpm)	Air Flow (CFM)
RESTROOMS 113 & 122.....	10.5	10.5	2.09	10.0	1.00	369
VESTIBULE 115.....	2.1	2.1	0.42	4.9	0.49	86
VESTIBULE 119.....	0.6	0.6	0.13	1.7	0.17	28
STORAGE ROOM 123.....	6.7	6.7	1.35	7.0	0.70	243
FORYER 127.....	1.1	1.1	0.22	2.8	0.28	45
STAIRWAYS S11 & S12.....	4.6	4.6	0.93	6.1	0.61	180
STORAGE ROOM 110.....	2.2	2.2	0.45	2.6	0.26	88

AIR SYSTEM DESIGN LOAD SUMMARY

Air System.: BLDG 642, FIRST FLOOR HEATING — 10-04-94
Weather....: Fort Devens, Massachusetts — HAP v3.04a
Prepared By: NEW ENGLAND DIVISION — Page 1 of 1

****

COOLING AT.....: Jul @ 1500 — HEATING AT.....: Winter Design
COOLING OA DB/RH..: 89.0 F / 44 % — HEATING OA DB...: 1.0 F

ZONE LOADS	Details	COOLING Sensible (BTU/hr)	COOLING Latent (BTU/hr)	HEATING Sensible (BTU/hr)
Solar Loads	94 sqft	3798	-	-
Wall Transmission	831 sqft	5892	-	17135
Roof Transmission	0 sqft	0	-	0
Glass Transmission	94 sqft	524	-	3780
Skylight Transmission	0 sqft	0	-	0
Door Transmission	80 sqft	231	-	1664
Floor Transmission	1182 sqft	0	-	4002
Partitions	0 sqft	0	-	0
Ceiling	0 sqft	0	-	0
Lighting	2.00 W/sqft	6662	-	-
Equipment	0.00 W/sqft	0	-	-
People	0 people	0	0	-
Infiltration		0	0	0
Miscellaneous		0	0	-
Safety Factor	20/ 20/ 20 %	3421	0	5316
>>Total Zone Loads (1)		20528	0	31897
Zone Conditioning (2)		26615	0	35185
Plenum Wall Load	0 %	0	-	-
Plenum Roof Load	0 %	0	-	-
Plenum Lighting Load	0 %	0	-	-
Return Fan Load		0	-	0
Ventilation Load	0 CFM	0	0	0
Supply Fan Load	0 CFM	0	-	0
Space Fan Coil Fans		191	-	-103
Duct Heat Gain/Loss	0 %	0	-	0
>>Total System Loads		26806	0	35083
Terminal Unit Cooling		26806	0	0
Terminal Unit Heating		0	-	35083
Precool Coil		0	0	0
Preheat Coil		0	-	0
Central Reheat Coil		0	-	-
Humidification Load		0	0	-
Terminal Reheat Coils		0	-	0
Space/Skin Heat Coils		0	-	0
>>Total Conditioning		26806	0	35083

Notes: (1) Zone loads calculated at occupied thermostat setpoint.
(2) Zone conditioning based on heat extraction analysis.
(3) In the COOLING column, positive loads indicate heat gains, while positive coil loads indicate system heat removal.
(4) In the HEATING column, positive loads indicate heat loss, while positive coil loads indicate system heat addition.

MECHANICAL DESIGN COMPUTATIONS

AIR SYSTEM SIZING SUMMARY

Air System.: BLDG 642, SECOND FLOOR HTG & CLG
Weather....: Fort Devens, Massachusetts
Prepared By: NEW ENGLAND DIVISION

10-04-94
HAP v3.04a

****

AIR SYSTEM INFORMATION

System Type.....: (2P-FC)
Number of Zones.....: 28
Floor Area.....: 13293 sqft

TERMINAL SYSTEM SIZING SUMMARY

Air System.: BLDG 642, SECOND FLOOR HTG & CLG — 10-04-94

Weather....: Fort Devens, Massachusetts — HAP v3.04a

Prepared By: NEW ENGLAND DIVISION — Page 1

****

TABLE 1: TERMINAL UNIT SIZING DATA

Zone Name	COOLING COIL Sens. (MBH)	COOLING COIL Total (MBH)	COOLING COIL Water (gpm)	HEATING COIL Load (MBH)	HEATING COIL Water (gpm)	Air Flow (CFM)
OFFICES 201 & 202.....	12.8	13.4	2.68	9.0	0.90	477
OFFICE 203.....	7.6	7.9	1.58	7.9	0.79	296
OFFICE 204.....	8.9	9.6	1.91	11.2	1.13	347
OFFICE 205, 206, 207/208	27.6	30.2	6.04	27.2	2.72	1036
OFFICE 209.....	9.1	9.7	1.94	11.3	1.13	349
OFFICE 210.....	8.9	9.3	1.86	8.1	0.81	338
OFFICES 211 & 212.....	13.0	13.7	2.73	9.2	0.92	486
OFFICE 213.....	5.1	5.6	1.12	2.6	0.26	180
OFFICES 218 & 222.....	9.2	9.6	1.93	7.0	0.70	322
OFFICE 219.....	22.6	24.5	4.90	20.8	2.08	849
OFFICE 221.....	37.0	38.8	7.76	23.5	2.36	1328
OFFICE 228.....	5.5	6.0	1.19	6.8	0.69	215
OFFICE 231.....	7.1	7.5	1.50	10.1	1.01	280
OFFICE 232.....	9.5	9.9	1.99	9.4	0.94	366
OFFICE 234, 238, 239/243	29.3	30.9	6.18	19.8	1.98	1076
OFFICES 235 & 242.....	18.8	19.7	3.94	12.8	1.28	693
OFFICE 245.....	9.3	9.7	1.94	9.5	0.95	359
OFFICE 246.....	7.2	7.7	1.53	10.1	1.01	287
OFFICE 249.....	4.6	4.9	0.98	5.7	0.58	179
OFFICE 251.....	13.2	13.7	2.74	8.4	0.84	497
OFFICE 252.....	14.6	15.0	3.00	9.1	0.91	551
OFFICES 253 & 254.....	22.8	23.5	4.70	13.9	1.39	852
OFFICE 255.....	15.1	15.6	3.11	9.3	0.93	567
OFFICE 256.....	12.9	13.5	2.71	7.4	0.74	482
TELEPHONE 257.....	1.2	1.3	0.27	1.2	0.12	46
CORRIDORS C21 & C25.....	18.7	20.3	4.07	13.1	1.32	679
CORRIDORS C22 & C26.....	19.0	20.7	4.14	13.2	1.32	694
CORRIDORS C23 & C24.....	21.4	23.8	4.76	12.2	1.22	766

AIR SYSTEM DESIGN LOAD SUMMARY

Air System.: BLDG 642, SECOND FLOOR HTG & CLG
Weather....: Fort Devens, Massachusetts
Prepared By: NEW ENGLAND DIVISION

10-04-94
HAP v3.04a

****

COOLING AT.....: Aug @ 1500
COOLING OA DB/RH..: 89.0 F / 44 %

HEATING AT.....: Winter Design
HEATING OA DB...: 1.0 F

ZONE LOADS	Details	COOLING Sensible (BTU/hr)	COOLING Latent (BTU/hr)	HEATING Sensible (BTU/hr)
Solar Loads	2192 sqft	88869	-	-
Wall Transmission	6633 sqft	48229	-	136772
Roof Transmission	0 sqft	0	-	0
Glass Transmission	2192 sqft	12279	-	88538
Skylight Transmission	0 sqft	0	-	0
Door Transmission	120 sqft	345	-	2489
Floor Transmission	0 sqft	0	-	0
Partitions	110 sqft	1479	-	2148
Ceiling	0 sqft	0	-	0
Lighting	2.00 W/sqft	74357	-	-
Equipment	0.00 W/sqft	0	-	-
People	102 people	19974	21648	-
Infiltration		0	0	0
Miscellaneous		0	0	-
Safety Factor	20/ 20/ 20 %	49107	4330	45989
>>Total Zone Loads (1)		294639	25978	275937
Zone Conditioning (2)		375145	25978	311466
Plenum Wall Load	0 %	0	-	-
Plenum Roof Load	0 %	0	-	-
Plenum Lighting Load	0 %	0	-	-
Return Fan Load		0	-	0
Ventilation Load	0 CFM	0	0	0
Supply Fan Load	0 CFM	0	-	0
Space Fan Coil Fans		2690	-	-1519
Duct Heat Gain/Loss	0 %	0	-	0
>>Total System Loads		377835	25978	309947
Terminal Unit Cooling		377835	23397	0
Terminal Unit Heating		0	-	309947
Precool Coil		0	0	0
Preheat Coil		0	-	0
Central Reheat Coil		0	-	-
Humidification Load		0	0	-
Terminal Reheat Coils		0	-	0
Space/Skin Heat Coils		0	-	0
>>Total Conditioning		377835	23397	309947

Notes: (1) Zone loads calculated at occupied thermostat setpoint.
(2) Zone conditioning based on heat extraction analysis.
(3) In the COOLING column, positive loads indicate heat gains, while positive coil loads indicate system heat removal.
(4) In the HEATING column, positive loads indicate heat loss, while positive coil loads indicate system heat addition.

AIR SYSTEM SIZING SUMMARY

Air System.: BLDG 642, SECOND FLOOR HEATING 10-04-94
Weather....: Fort Devens, Massachusetts HAP v3.04a
Prepared By: NEW ENGLAND DIVISION

****

AIR SYSTEM INFORMATION

System Type.....: (CONVECT)
Number of Zones.....: 2
Floor Area.....: 1500 sqft

TERMINAL SYSTEM SIZING SUMMARY

Air System.: BLDG 642, SECOND FLOOR HEATING
Weather....: Fort Devens, Massachusetts
Prepared By: NEW ENGLAND DIVISION

10-04-94
HAP v3.04a
Page 1

****

TABLE 1: TERMINAL UNIT SIZING DATA

Zone Name	COOLING COIL Sens. (MBH)	COOLING COIL Total (MBH)	COOLING COIL Water (gpm)	HEATING COIL Load (MBH)	HEATING COIL Water (gpm)	Air Flow (CFM)
BLDG 642, REST 216 & 224	0.0	0.0	0.00	28.2	2.82	0
BLDG 642, STAIRS S21/S22	0.0	0.0	0.00	4.9	0.49	0

AIR SYSTEM DESIGN LOAD SUMMARY

Air System.: BLDG 642, SECOND FLOOR HEATING — 10-04-94
Weather....: Fort Devens, Massachusetts — HAP v3.04a
Prepared By: NEW ENGLAND DIVISION —

****

COOLING AT.....: Jun @ 1500 — HEATING AT.....: Winter Design
COOLING OA DB/RH..: 86.0 F / 45 % — HEATING OA DB...: 1.0 F

ZONE LOADS	Details	COOLING Sensible (BTU/hr)	COOLING Latent (BTU/hr)	HEATING Sensible (BTU/hr)
Solar Loads	204 sqft	10020	-	-
Wall Transmission	936 sqft	8434	-	19296
Roof Transmission	0 sqft	0	-	0
Glass Transmission	204 sqft	1385	-	8260
Skylight Transmission	0 sqft	0	-	0
Door Transmission	0 sqft	0	-	0
Floor Transmission	0 sqft	0	-	0
Partitions	0 sqft	0	-	0
Ceiling	0 sqft	0	-	0
Lighting	2.00 W/sqft	8391	-	-
Equipment	0.00 W/sqft	0	-	-
People	0 people	0	0	-
Infiltration		0	0	0
Miscellaneous		0	0	-
Safety Factor	0/ 0/ 20 %	0	0	5511
>>Total Zone Loads (1)		28229	0	33066
Zone Conditioning (2)		28229	0	33066
Plenum Wall Load	0 %	0	-	-
Plenum Roof Load	0 %	0	-	-
Plenum Lighting Load	0 %	0	-	-
Return Fan Load		0	-	0
Ventilation Load	0 CFM	0	0	0
Supply Fan Load	0 CFM	0	-	0
Space Fan Coil Fans		0	-	0
Duct Heat Gain/Loss	0 %	0	-	0
>>Total System Loads		28229	0	33066
Terminal Unit Cooling		0	0	0
Terminal Unit Heating		0	-	33066
Precool Coil		0	0	0
Preheat Coil		0	-	0
Central Reheat Coil		0	-	-
Humidification Load		0	0	-
Terminal Reheat Coils		0	-	0
Space/Skin Heat Coils		0	-	0
>>Total Conditioning		0	0	33066

Notes: (1) Zone loads calculated at occupied thermostat setpoint.
(2) Zone conditioning based on heat extraction analysis.
(3) In the COOLING column, positive loads indicate heat gains, while positive coil loads indicate system heat removal.
(4) In the HEATING column, positive loads indicate heat loss, while positive coil loads indicate system heat addition.

AIR SYSTEM SIZING SUMMARY

Air System.: BLDG 642, THIRD FLOOR HTG & CLG 10-04-94
Weather....: Fort Devens, Massachusetts HAP v3.04a
Prepared By: NEW ENGLAND DIVISION

****

AIR SYSTEM INFORMATION

System Type.....: (2P-FC)
Number of Zones.....: 27
Floor Area.....: 11267 sqft

TERMINAL SYSTEM SIZING SUMMARY

Air System.: BLDG 642, THIRD FLOOR HTG & CLG 10-04-94
Weather....: Fort Devens, Massachusetts HAP v3.04a
Prepared By: NEW ENGLAND DIVISION Page 1

****

TABLE 1: TERMINAL UNIT SIZING DATA

Zone Name	COOLING COIL Sens. (MBH)	COOLING COIL Total (MBH)	COOLING COIL Water (gpm)	HEATING COIL Load (MBH)	HEATING COIL Water (gpm)	Air Flow (CFM)
OFFICES 301 & 302.....	14.1	14.7	2.93	12.0	1.20	530
OFFICE 303.....	8.3	8.3	1.67	9.3	0.93	327
OFFICE 304.....	11.2	11.7	2.34	14.5	1.45	435
OFF 305, 306, 307 & 308.	35.6	38.1	7.62	40.0	4.00	1351
OFFICE 309.....	10.9	11.5	2.31	14.5	1.45	425
OFFICE 310.....	8.9	8.9	1.77	9.4	0.94	345
OFFICES 311 & 312.....	14.4	15.0	3.01	12.3	1.23	541
OFFICE 313.....	4.9	5.2	1.04	3.8	0.38	176
OFFICES 320 & 321.....	23.3	24.2	4.84	18.6	1.86	789
OFFICE 322.....	5.1	5.3	1.06	4.6	0.46	181
OFFICE 327.....	5.2	5.7	1.13	4.5	0.45	188
OFFICE 328.....	4.8	5.1	1.02	5.9	0.59	184
OFFICE 329.....	11.1	11.7	2.34	15.1	1.51	434
OFFICE 330.....	14.4	14.9	2.99	14.9	1.49	552
OFF 331, 332, 333 & 334.	49.9	52.2	10.44	41.7	4.17	1843
OFFICE 335.....	14.2	14.8	2.95	14.9	1.49	546
OFFICE 336.....	6.4	6.7	1.35	9.1	0.91	259
OFFICES 337 & 338.....	9.2	9.8	1.96	11.6	1.16	360
OFFICE 340.....	16.7	16.7	3.34	11.5	1.15	633
OFFICE 341.....	16.3	16.3	3.25	11.9	1.19	618
OFFICES 342 & 343.....	25.7	25.7	5.15	18.9	1.90	974
OFFICE 344.....	16.9	16.9	3.39	12.4	1.24	641
OFFICE 345.....	13.7	13.7	2.75	9.8	0.98	519
TELEPHONE 346.....	1.6	1.7	0.35	1.9	0.19	62
CORRIDOR C31 & C35.....	9.6	10.6	2.12	9.1	0.91	350
CORRIDOR C32 & C36.....	9.5	10.5	2.10	9.1	0.91	348
CORRIDOR C33 & C34.....	14.2	15.9	3.17	11.1	1.11	499

AIR SYSTEM DESIGN LOAD SUMMARY

Air System.: BLDG 642, THIRD FLOOR HTG & CLG
Weather....: Fort Devens, Massachusetts
Prepared By: NEW ENGLAND DIVISION

10-04-94
HAP v3.04a

****

COOLING AT.....: Jul @ 1500
COOLING OA DB/RH..: 89.0 F / 44 %

HEATING AT.....: Winter Design
HEATING OA DB...: 1.0 F

ZONE LOADS	Details	COOLING Sensible (BTU/hr)	COOLING Latent (BTU/hr)	HEATING Sensible (BTU/hr)
Solar Loads	1683 sqft	66317	-	-
Wall Transmission	5660 sqft	38402	-	116709
Roof Transmission	11275 sqft	41325	-	90101
Glass Transmission	1683 sqft	9430	-	67990
Skylight Transmission	0 sqft	0	-	0
Door Transmission	80 sqft	230	-	1657
Floor Transmission	0 sqft	0	-	0
Partitions	0 sqft	0	-	0
Ceiling	0 sqft	0	-	0
Lighting	2.00 W/sqft	63024	-	-
Equipment	0.00 W/sqft	0	-	-
People	85 people	16191	17548	-
Infiltration		0	0	0
Miscellaneous		0	0	-
Safety Factor	20/ 20/ 20 %	46984	3510	55291
>>Total Zone Loads (1)		281901	21058	331748
Zone Conditioning (2)		360883	21058	354202
Plenum Wall Load	0 %	0	-	-
Plenum Roof Load	0 %	0	-	-
Plenum Lighting Load	0 %	0	-	-
Return Fan Load		0	-	0
Ventilation Load	0 CFM	0	0	0
Supply Fan Load	0 CFM	0	-	0
Space Fan Coil Fans		2607	-	-1752
Duct Heat Gain/Loss	0 %	0	-	0
>>Total System Loads		363490	21058	352450
Terminal Unit Cooling		363490	14067	0
Terminal Unit Heating		0	-	352450
Precool Coil		0	0	0
Preheat Coil		0	-	0
Central Reheat Coil		0	-	-
Humidification Load		0	0	-
Terminal Reheat Coils		0	-	0
Space/Skin Heat Coils		0	-	0
>>Total Conditioning		363490	14067	352450

Notes: (1) Zone loads calculated at occupied thermostat setpoint.
(2) Zone conditioning based on heat extraction analysis.
(3) In the COOLING column, positive loads indicate heat gains, while positive coil loads indicate system heat removal.
(4) In the HEATING column, positive loads indicate heat loss, while positive coil loads indicate system heat addition.

AIR SYSTEM SIZING SUMMARY

Air System.: BLDG 642, THIRD FLOOR HEATING 10-04-94
Weather....: Fort Devens, Massachusetts HAP v3.04a
Prepared By: NEW ENGLAND DIVISION

****

AIR SYSTEM INFORMATION

System Type.....: (CONVECT)
Number of Zones.....: 4
Floor Area.....: 1689 sqft

TERMINAL SYSTEM SIZING SUMMARY

Air System.: BLDG 642, THIRD FLOOR HEATING 10-04-94
Weather....: Fort Devens, Massachusetts HAP v3.04a
Prepared By: NEW ENGLAND DIVISION Page 1

****

TABLE 1: TERMINAL UNIT SIZING DATA

Zone Name	COOLING COIL Sens. (MBH)	COOLING COIL Total (MBH)	COOLING COIL Water (gpm)	HEATING COIL Load (MBH)	HEATING COIL Water (gpm)	Air Flow (CFM)
STORAGE 314.....	0.0	0.0	0.00	0.6	0.06	0
RESTROOMS 317 & 324.....	0.0	0.0	0.00	40.1	4.01	0
STORAGE 319.....	0.0	0.0	0.00	4.4	0.44	0
STAIRS S31 & S32.....	0.0	0.0	0.00	7.3	0.73	0

AIR SYSTEM DESIGN LOAD SUMMARY

Air System.: BLDG 642, THIRD FLOOR HEATING — 10-04-94
Weather....: Fort Devens, Massachusetts — HAP v3.04a
Prepared By: NEW ENGLAND DIVISION — Page 1 of 1

****

COOLING AT.....: Jun @ 1500 — HEATING AT.....: Winter Design
COOLING OA DB/RH..: 86.0 F / 45 % — HEATING OA DB...: 1.0 F

ZONE LOADS	Details	COOLING Sensible (BTU/hr)	COOLING Latent (BTU/hr)	HEATING Sensible (BTU/hr)
Solar Loads	223 sqft	10888	-	-
Wall Transmission	1027 sqft	9289	-	21182
Roof Transmission	1689 sqft	6931	-	13497
Glass Transmission	223 sqft	1511	-	9009
Skylight Transmission	-0 sqft	0	-	0
Door Transmission	0 sqft	0	-	0
Floor Transmission	0 sqft	0	-	0
Partitions	0 sqft	0	-	0
Ceiling	0 sqft	0	-	0
Lighting	2.00 W/sqft	9448	-	-
Equipment	0.00 W/sqft	0	-	-
People	0 people	0	0	-
Infiltration		0	0	0
Miscellaneous		0	0	-
Safety Factor	0/ 0/ 20 %	0	0	8738
>>Total Zone Loads (1)		38067	0	52425
Zone Conditioning (2)		38067	0	52425
Plenum Wall Load	0 %	0	-	-
Plenum Roof Load	0 %	0	-	-
Plenum Lighting Load	0 %	0	-	-
Return Fan Load		0	-	0
Ventilation Load	0 CFM	0	0	0
Supply Fan Load	0 CFM	0	-	0
Space Fan Coil Fans		0	-	0
Duct Heat Gain/Loss	0 %	0	-	0
>>Total System Loads		38067	0	52425
Terminal Unit Cooling		0	0	0
Terminal Unit Heating		0	-	52425
Precool Coil		0	0	0
Preheat Coil		0	-	0
Central Reheat Coil		0	-	-
Humidification Load		0	0	-
Terminal Reheat Coils		0	-	0
Space/Skin Heat Coils		0	-	0
>>Total Conditioning		0	0	52425

Notes: (1) Zone loads calculated at occupied thermostat setpoint.
(2) Zone conditioning based on heat extraction analysis.
(3) In the COOLING column, positive loads indicate heat gains, while positive coil loads indicate system heat removal.
(4) In the HEATING column, positive loads indicate heat loss, while positive coil loads indicate system heat addition.

AIR SYSTEM SIZING SUMMARY

Air System.: BLDG 642-FIRST FLOOR (MAU 642-1) 11-02-94
Weather....: Fort Devens, Massachusetts HAP v3.04a
Prepared By: NEW ENGLAND DIVISION

****

AIR SYSTEM INFORMATION

System Type.....:	(TEMPER)
Number of Zones.....:	1
Floor Area.....:	0 sqft

PRECOOL COIL SIZING DATA

Total coil load (Tons)...:	0.9	Entering Db/Wb...:	89.0/ 72.0 F
Sensible coil load (Tons):	0.9	Leaving Db/Wb....:	75.0/ 67.9 F
Coil airflow (CFM).....:	700	Setpoint temp....:	75.0 F
Water gpm @ 10F rise.....:	2.10	Bypass factor....:	0.100

PREHEAT COIL SIZING DATA

Max coil load (BTU/hr)...:	51661	BTU/hr/sqft.....:	0.0
Coil airflow (CFM).....:	700	Water gpm @ 20F drop:	5.17
Setpoint temperature (F).:	70.0		

SUPPLY FAN SIZING DATA

Actual airflow (CFM).....:	700
Standard airflow (CFM)...:	693

VENTILATION AIR DATA

Airflow (CFM).....:	700	CFM/person.....:	0.00

AIR SYSTEM SIZING SUMMARY

Air System.: BLDG 642-FIRST FLOOR (MAU 642-2) 11-02-94
Weather....: Fort Devens, Massachusetts HAP v3.04a
Prepared By: NEW ENGLAND DIVISION

****

AIR SYSTEM INFORMATION

System Type.....:	(TEMPER)
Number of Zones.....:	1
Floor Area.....:	0 sqft

PRECOOL COIL SIZING DATA

Total coil load (Tons)...:	0.8	Entering Db/Wb...:	89.0/ 72.0 F
Sensible coil load (Tons):	0.8	Leaving Db/Wb....:	75.0/ 67.9 F
Coil airflow (CFM).....:	660	Setpoint temp....:	75.0 F
Water gpm @ 10F rise.....:	1.98	Bypass factor....:	0.100

PREHEAT COIL SIZING DATA

Max coil load (BTU/hr)...:	48709	BTU/hr/sqft.....:	0.0
Coil airflow (CFM).....:	660	Water gpm @ 20F drop:	4.87
Setpoint temperature (F).:	70.0		

SUPPLY FAN SIZING DATA

Actual airflow (CFM).....:	660
Standard airflow (CFM)...:	654

VENTILATION AIR DATA

Airflow (CFM).....:	660	CFM/person.....:	0.00

AIR SYSTEM SIZING SUMMARY

Air System.: BLDG 642-SECOND FL (MAU 642-3) 11-02-94
Weather....: Fort Devens, Massachusetts HAP v3.04a
Prepared By: NEW ENGLAND DIVISION

****

AIR SYSTEM INFORMATION

System Type.....: (TEMPER)
Number of Zones.....: 1
Floor Area.....: 0 sqft

PRECOOL COIL SIZING DATA

Total coil load (Tons)...:	1.0	Entering Db/Wb...:	89.0/ 72.0 F
Sensible coil load (Tons):	1.0	Leaving Db/Wb....:	75.0/ 67.9 F
Coil airflow (CFM).....:	770	Setpoint temp....:	75.0 F
Water gpm @ 10F rise.....:	2.31	Bypass factor....:	0.100

PREHEAT COIL SIZING DATA

Max coil load (BTU/hr)...:	56827	BTU/hr/sqft.....:	0.0
Coil airflow (CFM).....:	770	Water gpm @ 20F drop:	5.69
Setpoint temperature (F).:	70.0		

SUPPLY FAN SIZING DATA

Actual airflow (CFM).....:	770
Standard airflow (CFM)...:	763

VENTILATION AIR DATA

Airflow (CFM).....:	770	CFM/person.....:	0.00

AIR SYSTEM SIZING SUMMARY

Air System.: BLDG 642-SECOND FL (MAU 642-4) 11-02-94
Weather....: Fort Devens, Massachusetts HAP v3.04a
Prepared By: NEW ENGLAND DIVISION

****

AIR SYSTEM INFORMATION

System Type.....: (TEMPER)
Number of Zones.....: 1
Floor Area.....: 0 sqft

PRECOOL COIL SIZING DATA

Total coil load (Tons)...:	1.2	Entering Db/Wb...:	89.0/ 72.0 F
Sensible coil load (Tons):	1.2	Leaving Db/Wb....:	75.0/ 67.9 F
Coil airflow (CFM).....:	960	Setpoint temp....:	75.0 F
Water gpm @ 10F rise.....:	2.88	Bypass factor....:	0.100

PREHEAT COIL SIZING DATA

Max coil load (BTU/hr)...:	70849	BTU/hr/sqft.....:	0.0
Coil airflow (CFM).....:	960	Water gpm @ 20F drop:	7.09
Setpoint temperature (F).:	70.0		

SUPPLY FAN SIZING DATA

Actual airflow (CFM).....:	960
Standard airflow (CFM)...:	951

VENTILATION AIR DATA

Airflow (CFM).....:	960	CFM/person.....:	0.00

AIR SYSTEM SIZING SUMMARY

Air System.: BLDG 642 PHYSICAL FIT MAU 642-5 — 12-10-94
Weather....: Fort Devens, Massachusetts — HAP v3.04a
Prepared By: NEW ENGLAND DIVISION — Page 1 of 1

****

AIR SYSTEM INFORMATION

System Type.....: (TEMPER)
Number of Zones.....: 1
Floor Area.....: 0 sqft

PREHEAT COIL SIZING DATA

Max coil load (BTU/hr)...:	73801	BTU/hr/sqft.....:	0.0
Coil airflow (CFM).....:	1000	Water gpm @ 20F drop:	7.38
Setpoint temperature (F).:	70.0		

SUPPLY FAN SIZING DATA

Actual airflow (CFM).....:	1000
Standard airflow (CFM)...:	990

VENTILATION AIR DATA

Airflow (CFM).....:	1000	CFM/person.....:	0.00

AIR SYSTEM SIZING SUMMARY

Air System.: BLDG 642 THIRD FLOOR (MAU 642-6) 12-10-94
Weather....: Fort Devens, Massachusetts HAP v3.04a
Prepared By: NEW ENGLAND DIVISION

****

AIR SYSTEM INFORMATION

System Type.....:	(TEMPER)
Number of Zones.....:	1
Floor Area.....:	0 sqft

PRECOOL COIL SIZING DATA

Total coil load (Tons)...:	1.1	Entering Db/Wb...:	89.0/ 72.0 F
Sensible coil load (Tons):	1.1	Leaving Db/Wb....:	75.0/ 67.9 F
Coil airflow (CFM).....:	870	Setpoint temp....:	75.0 F
Water gpm @ 10F rise....:	2.61	Bypass factor....:	0.100

PREHEAT COIL SIZING DATA

Max coil load (BTU/hr)...:	64207	BTU/hr/sqft.....:	0.0
Coil airflow (CFM).....:	870	Water gpm @ 20F drop:	6.42
Setpoint temperature (F).:	70.0		

SUPPLY FAN SIZING DATA

Actual airflow (CFM).....:	870
Standard airflow (CFM)...:	862

VENTILATION AIR DATA

Airflow (CFM).....:	870	CFM/person.....:	0.00

160

AIR SYSTEM SIZING SUMMARY

Air System.: BLDG 642 THIRD FLOOR (MAU 642-7) 12-10-94
Weather....: Fort Devens, Massachusetts HAP v3.04a
Prepared By: NEW ENGLAND DIVISION

****

AIR SYSTEM INFORMATION

System Type.....: (TEMPER)
Number of Zones.....: 1
Floor Area.....: 0 sqft

PRECOOL COIL SIZING DATA

Total coil load (Tons)...:	1.1	Entering Db/Wb...:	89.0/ 72.0 F
Sensible coil load (Tons):	1.1	Leaving Db/Wb....:	75.0/ 67.9 F
Coil airflow (CFM).....:	870	Setpoint temp....:	75.0 F
Water gpm @ 10F rise.....:	2.61	Bypass factor.....:	0.100

PREHEAT COIL SIZING DATA

Max coil load (BTU/hr)...:	64207	BTU/hr/sqft.....:	0.0
Coil airflow (CFM).....:	870	Water gpm @ 20F drop:	6.42
Setpoint temperature (F).:	70.0		

SUPPLY FAN SIZING DATA

Actual airflow (CFM).....:	870
Standard airflow (CFM)...:	862

VENTILATION AIR DATA

Airflow (CFM).....:	870	CFM/person.....:	0.00

BUILDING 644

SPACE DESCRIPTIONS

SPACE DESCRIPTION

Prepared by: NEW ENGLAND DIVISION 12-10-94

HAP v3.04 Page 1

****

GENERAL

Name.....: BLDG 644, STORAGE 101
Floor Area.....: 362.0 sqft
Building Weight.: 130.0 lb/sqft
Windows Shaded..? N
Partitions Used.? N

LIGHTING

Overhead Fixture: Recessed
Lamp Wattage....: 2.00 W/sqft
Ballast Mult....: 1.25
Task Lighting...: 0.00 W/sqft

PEOPLE

Occupancy.....: 0 People
Activity Level..: Office Work
Sensible.....: 245.0 BTU/hr
Latent.....: 205.0 BTU/hr

OTHER LOADS

Equipment.....: 0.00 W/sqft
Misc. Sensible..: 0.0 BTU/hr
Misc. Latent....: 0.0 BTU/hr

SCHEDULES

Lighting....: BUILDING 642, FT DEVENS
Task Lights.: BUILDING 642, FT DEVENS
People.....: BUILDING 642, FT DEVENS
Equipment...: BUILDING 642, FT DEVENS
Misc. Sens..: BUILDING 642, FT DEVENS
Misc. Latent: BUILDING 642, FT DEVENS

INFILTRATION

Cooling.....: 0.00 CFM/sqft
Heating.....: 40.0 CFM
Typical.....: 20.0 CFM
When Fan On.? N

FLOOR

Type.....:Slab On Grade
Perimeter.....: 19.5 ft
Slab Floor Area.....: 362.0 sqft
Floor R-Value.....: 0.50
Insulation R-value....: 0.00

WALL Exp	Gross Area (sqft)	WALL Type	WINDOW Type	WINDOW Qty	WINDOW Shade	WINDOW Type	WINDOW Qty	WINDOW Shade	Any Doors?
S	196.0	3	2	2	-	1	0	-	N

No roof or door data for this space.

No partition data for this space.

SPACE DESCRIPTION

Prepared by: NEW ENGLAND DIVISION 12-10-94

HAP v3.04 Page 1

****

GENERAL

Name.....: BLDG 644, STORAGE 102
Floor Area.....: 356.0 sqft
Building Weight.: 130.0 lb/sqft
Windows Shaded..? N
Partitions Used.? N

LIGHTING

Overhead Fixture: Recessed
Lamp Wattage....: 2.00 W/sqft
Ballast Mult....: 1.25
Task Lighting...: 0.00 W/sqft

PEOPLE

Occupancy.....: 0 People
Activity Level..: Office Work
Sensible.....: 245.0 BTU/hr
Latent.....: 205.0 BTU/hr

OTHER LOADS

Equipment.....: 0.00 W/sqft
Misc. Sensible..: 0.0 BTU/hr
Misc. Latent....: 0.0 BTU/hr

SCHEDULES

Lighting....: BUILDING 642, FT DEVENS
Task Lights.: BUILDING 642, FT DEVENS
People.....: BUILDING 642, FT DEVENS
Equipment...: BUILDING 642, FT DEVENS
Misc. Sens..: BUILDING 642, FT DEVENS
Misc. Latent: BUILDING 642, FT DEVENS

INFILTRATION

Cooling.....: 0.00 CFM/sqft
Heating.....: 60.0 CFM
Typical.....: 30.0 CFM
When Fan On.? N

FLOOR

Type.....:Slab On Grade
Perimeter.....: 39.2 ft
Slab Floor Area.....: 356.0 sqft
Floor R-Value.....: 0.50
Insulation R-value....: 0.00

WALL Exp	Gross Area (sqft)	WALL Type	WINDOW Type	WINDOW Qty	WINDOW Shade	WINDOW Type	WINDOW Qty	WINDOW Shade	Any Doors?
S	346.0	3	2	3	-	1	0	-	N
W	195.0	3	2	0	-	1	0	-	N

No roof or door data for this space.

No partition data for this space.

SPACE DESCRIPTION

Prepared by: NEW ENGLAND DIVISION 12-10-94

HAP v3.04 Page 1

****

GENERAL

Name.....: BLDG 644, STORAGE 103
Floor Area.....: 252.0 sqft
Building Weight.: 130.0 lb/sqft
Windows Shaded..? N
Partitions Used.? N

LIGHTING

Overhead Fixture: Recessed
Lamp Wattage....: 2.00 W/sqft
Ballast Mult....: 1.25
Task Lighting...: 0.00 W/sqft

PEOPLE

Occupancy.....: 0 People
Activity Level..: Office Work
Sensible.....: 245.0 BTU/hr
Latent.....: 205.0 BTU/hr

OTHER LOADS

Equipment.....: 0.00 W/sqft
Misc. Sensible..: 0.0 BTU/hr
Misc. Latent....: 0.0 BTU/hr

SCHEDULES

Lighting....: BUILDING 642, FT DEVENS
Task Lights.: BUILDING 642, FT DEVENS
People.....: BUILDING 642, FT DEVENS
Equipment...: BUILDING 642, FT DEVENS
Misc. Sens..: BUILDING 642, FT DEVENS
Misc. Latent: BUILDING 642, FT DEVENS

INFILTRATION

Cooling.....: 0.00 CFM/sqft
Heating.....: 60.0 CFM
Typical.....: 30.0 CFM
When Fan On.? N

FLOOR

Type.....:Slab On Grade
Perimeter.....: 19.5 ft
Slab Floor Area.....: 252.0 sqft
Floor R-Value.....: 0.50
Insulation R-value....: 0.00

WALL Exp	Gross Area (sqft)	WALL Type	WINDOW Type	WINDOW Qty	WINDOW Shade	WINDOW Type	WINDOW Qty	WINDOW Shade	Any Doors?
N	196.0	3	2	3	-	1	0	-	N
W	140.0	3	2	0	-	1	0	-	N

No roof or door data for this space.

No partition data for this space.

SPACE DESCRIPTION

Prepared by: NEW ENGLAND DIVISION 12-10-94

HAP v3.04 Page 1

****

GENERAL

Name.....: BLDG 644, STOR 104 & 105
Floor Area.....: 226.0 sqft
Building Weight.: 130.0 lb/sqft
Windows Shaded..? N
Partitions Used.? N

LIGHTING

Overhead Fixture: Recessed
Lamp Wattage....: 2.00 W/sqft
Ballast Mult....: 1.25
Task Lighting...: 0.00 W/sqft

PEOPLE

Occupancy.....: 0 People
Activity Level..: Office Work
Sensible.....: 245.0 BTU/hr
Latent.....: 205.0 BTU/hr

OTHER LOADS

Equipment.....: 0.00 W/sqft
Misc. Sensible..: 0.0 BTU/hr
Misc. Latent....: 0.0 BTU/hr

SCHEDULES

Lighting....: BUILDING 642, FT DEVENS
Task Lights.: BUILDING 642, FT DEVENS
People.....: BUILDING 642, FT DEVENS
Equipment...: BUILDING 642, FT DEVENS
Misc. Sens..: BUILDING 642, FT DEVENS
Misc. Latent: BUILDING 642, FT DEVENS

INFILTRATION

Cooling.....: 0.00 CFM/sqft
Heating.....: 60.0 CFM
Typical.....: 30.0 CFM
When Fan On.? N

FLOOR

Type.....:Slab On Grade
Perimeter.....: 17.5 ft
Slab Floor Area.....: 226.0 sqft
Floor R-Value.....: 0.50
Insulation R-value....: 0.00

WALL Exp	Gross Area (sqft)	WALL Type	WINDOW Type	WINDOW Qty	WINDOW Shade	WINDOW Type	WINDOW Qty	WINDOW Shade	Any Doors?
N	195.0	3	2	3	-	1	0	-	N

No roof or door data for this space.

No partition data for this space.

SPACE DESCRIPTION

Prepared by: NEW ENGLAND DIVISION
HAP v3.04

12-10-94
Page 1

****

GENERAL
Name.....: 644-PHYS READINESS 106
Floor Area.....: 1050.8 sqft
Building Weight.: 130.0 lb/sqft
Windows Shaded..? N
Partitions Used.? N

LIGHTING
Overhead Fixture: Recessed
Lamp Wattage....: 2.00 W/sqft
Ballast Mult....: 1.25
Task Lighting...: 0.00 W/sqft

PEOPLE
Occupancy.....: 8 People
Activity Level..: Heavy Work
Sensible.....: 525.0 BTU/hr
Latent.....: 925.0 BTU/hr

OTHER LOADS
Equipment.....: 0.00 W/sqft
Misc. Sensible..: 0.0 BTU/hr
Misc. Latent....: 0.0 BTU/hr

SCHEDULES
Lighting....: BUILDING 642, FT DEVENS
Task Lights.: BUILDING 642, FT DEVENS
People.....: BUILDING 642, FT DEVENS
Equipment...: BUILDING 642, FT DEVENS
Misc. Sens..: BUILDING 642, FT DEVENS
Misc. Latent: BUILDING 642, FT DEVENS

INFILTRATION
Cooling.....: 0.00 CFM/sqft
Heating.....: 200.0 CFM
Typical.....: 100.0 CFM
When Fan On.? N

FLOOR
Type.....:Slab On Grade
Perimeter.....: 78.0 ft
Slab Floor Area.....: 1050.8 sqft
Floor R-Value.....: 0.50
Insulation R-value....: 0.00

WALL Exp	Gross Area (sqft)	WALL Type	WINDOW Type	WINDOW Qty	WINDOW Shade	WINDOW Type	WINDOW Qty	WINDOW Shade	Any Doors?
N	585.0	3	2	9	-	1	0	-	N
E	195.0	3	2	0	-	1	0	-	Y

ROOF Exp	Slope (deg)	Gross Area (sqft)	ROOF Type	SKYLIGHT Type	SKYLIGHT Qty
-	-	-	-	-	-
-	-	-	-	-	-
-	-	-	-	-	-
-	-	-	-	-	-

DOOR
Gross Area..: 20.1 sqft
Uvalue.....: 0.300
Glass Area..: 0.0 sqft
Glass U-val.: 0.500
Shade Coeff.: 1.00
Glass Shaded? N

No partition data for this space.

SPACE DESCRIPTION

Prepared by: NEW ENGLAND DIVISION 12-10-94

HAP v3.04 Page 1

****

GENERAL

Name.....: 644-PHYS READINESS 107

Floor Area.....: 741.0 sqft

Building Weight.: 130.0 lb/sqft

Windows Shaded..? N

Partitions Used.? N

LIGHTING

Overhead Fixture: Recessed

Lamp Wattage....: 2.00 W/sqft

Ballast Mult....: 1.25

Task Lighting...: 0.00 W/sqft

PEOPLE

Occupancy.....: 7 People

Activity Level..: Heavy Work

Sensible.....: 525.0 BTU/hr

Latent.....: 925.0 BTU/hr

OTHER LOADS

Equipment.....: 0.00 W/sqft

Misc. Sensible..: 0.0 BTU/hr

Misc. Latent....: 0.0 BTU/hr

SCHEDULES

Lighting....: BUILDING 642, FT DEVENS

Task Lights.: BUILDING 642, FT DEVENS

People.....: BUILDING 642, FT DEVENS

Equipment...: BUILDING 642, FT DEVENS

Misc. Sens..: BUILDING 642, FT DEVENS

Misc. Latent: BUILDING 642, FT DEVENS

INFILTRATION

Cooling.....: 0.00 CFM/sqft

Heating.....: 120.0 CFM

Typical.....: 60.0 CFM

When Fan On.? N

FLOOR

Type.....:Slab On Grade

Perimeter.....: 38.0 ft

Slab Floor Area.....: 741.0 sqft

Floor R-Value.....: 0.50

Insulation R-value....: 0.00

WALL Exp	Gross Area (sqft)	WALL Type	WINDOW Type	WINDOW Qty	WINDOW Shade	WINDOW Type	WINDOW Qty	WINDOW Shade	Any Doors?
S	380.0	3	2	5	-	1	0	-	Y

ROOF Exp	Slope (deg)	Gross Area (sqft)	ROOF Type	SKYLIGHT Type	SKYLIGHT Qty
-	-	-	-	-	-
-	-	-	-	-	-
-	-	-	-	-	-
-	-	-	-	-	-

DOOR

Gross Area..: 20.1 sqft

Uvalue.....: 0.300

Glass Area..: 0.0 sqft

Glass U-val.: 0.500

Shade Coeff.: 1.00

Glass Shaded? N

No partition data for this space.

SPACE DESCRIPTION

Prepared by: NEW ENGLAND DIVISION 12-10-94

HAP v3.04 Page 1

****

GENERAL

Name.....: BLDG 644, VAULT 108
Floor Area.....: 380.3 sqft
Building Weight.: 130.0 lb/sqft
Windows Shaded..? N
Partitions Used.? N

LIGHTING

Overhead Fixture: Recessed
Lamp Wattage....: 2.00 W/sqft
Ballast Mult....: 1.25
Task Lighting...: 0.00 W/sqft

PEOPLE

Occupancy.....: 0 People
Activity Level..: Office Work
Sensible.....: 245.0 BTU/hr
Latent.....: 205.0 BTU/hr

OTHER LOADS

Equipment.....: 0.00 W/sqft
Misc. Sensible..: 0.0 BTU/hr
Misc. Latent....: 0.0 BTU/hr

SCHEDULES

Lighting....: BUILDING 642, FT DEVENS
Task Lights.: BUILDING 642, FT DEVENS
People.....: BUILDING 642, FT DEVENS
Equipment...: BUILDING 642, FT DEVENS
Misc. Sens..: BUILDING 642, FT DEVENS
Misc. Latent: BUILDING 642, FT DEVENS

INFILTRATION

Cooling.....: 0.00 CFM/sqft
Heating.....: 0.0 CFM
Typical.....: 0.0 CFM
When Fan On.? N

FLOOR

Type.....:Slab On Grade
Perimeter.....: 7.0 ft
Slab Floor Area.....: 380.0 sqft
Floor R-Value.....: 0.50
Insulation R-value....: 0.00

WALL Exp	Gross Area (sqft)	WALL Type	WINDOW Type	WINDOW Qty	WINDOW Shade	WINDOW Type	WINDOW Qty	WINDOW Shade	Any Doors?
S	70.0	3	2	0	-	1	0	-	N

No roof or door data for this space.

No partition data for this space.

SPACE DESCRIPTION

Prepared by: NEW ENGLAND DIVISION 12-10-94

HAP v3.04 Page 1

****

GENERAL

Name.....: BLDG 644, STOR 109 & 120
Floor Area.....: 256.5 sqft
Building Weight.: 130.0 lb/sqft
Windows Shaded..? N
Partitions Used.? N

LIGHTING

Overhead Fixture: Recessed
Lamp Wattage....: 2.00 W/sqft
Ballast Mult....: 1.25
Task Lighting...: 0.00 W/sqft

PEOPLE

Occupancy.....: 0 People
Activity Level..: Office Work
Sensible.....: 245.0 BTU/hr
Latent.....: 205.0 BTU/hr

OTHER LOADS

Equipment.....: 0.00 W/sqft
Misc. Sensible..: 0.0 BTU/hr
Misc. Latent....: 0.0 BTU/hr

SCHEDULES

Lighting....: BUILDING 642, FT DEVENS
Task Lights.: BUILDING 642, FT DEVENS
People.....: BUILDING 642, FT DEVENS
Equipment...: BUILDING 642, FT DEVENS
Misc. Sens..: BUILDING 642, FT DEVENS
Misc. Latent: BUILDING 642, FT DEVENS

INFILTRATION

Cooling.....: 0.00 CFM/sqft
Heating.....: 40.0 CFM
Typical.....: 20.0 CFM
When Fan On.? N

FLOOR

Type.....:Slab On Grade
Perimeter.....: 19.5 ft
Slab Floor Area.....: 256.5 sqft
Floor R-Value.....: 0.50
Insulation R-value....: 0.00

WALL Exp	Gross Area (sqft)	WALL Type	WINDOW Type	WINDOW Qty	WINDOW Shade	WINDOW Type	WINDOW Qty	WINDOW Shade	Any Doors?
E	195.0	3	2	2	-	1	0	-	N

No roof or door data for this space.

No partition data for this space.

SPACE DESCRIPTION

Prepared by: NEW ENGLAND DIVISION 12-10-94

HAP v3.04 Page 1

****

GENERAL

Name.....: BLDG 644, REST 111 & 119
Floor Area.....: 182.3 sqft
Building Weight.: 130.0 lb/sqft
Windows Shaded..? N
Partitions Used.? N

LIGHTING

Overhead Fixture: Recessed
Lamp Wattage....: 2.00 W/sqft
Ballast Mult....: 1.25
Task Lighting...: 0.00 W/sqft

PEOPLE

Occupancy.....: 0 People
Activity Level..: Office Work
Sensible.....: 245.0 BTU/hr
Latent.....: 205.0 BTU/hr

OTHER LOADS

Equipment.....: 0.00 W/sqft
Misc. Sensible..: 0.0 BTU/hr
Misc. Latent....: 0.0 BTU/hr

SCHEDULES

Lighting....: BUILDING 642, FT DEVENS
Task Lights.: BUILDING 642, FT DEVENS
People.....: BUILDING 642, FT DEVENS
Equipment...: BUILDING 642, FT DEVENS
Misc. Sens..: BUILDING 642, FT DEVENS
Misc. Latent: BUILDING 642, FT DEVENS

INFILTRATION

Cooling.....: 0.00 CFM/sqft
Heating.....: 20.0 CFM
Typical.....: 10.0 CFM
When Fan On.? N

FLOOR

Type.....:Slab On Grade
Perimeter.....: 12.5 ft
Slab Floor Area.....: 182.3 sqft
Floor R-Value.....: 0.50
Insulation R-value....: 0.00

WALL Exp	Gross Area (sqft)	WALL Type	WINDOW Type	WINDOW Qty	WINDOW Shade	WINDOW Type	WINDOW Qty	WINDOW Shade	Any Doors?
E	135.0	3	2	1	-	1	0	-	N

No roof or door data for this space.

No partition data for this space.

SPACE DESCRIPTION

Prepared by: NEW ENGLAND DIVISION 12-10-94

HAP v3.04 Page 1

****

GENERAL

Name.....: BLDG 644, STORAGE 112
Floor Area.....: 793.0 sqft
Building Weight.: 130.0 lb/sqft
Windows Shaded..? N
Partitions Used.? N

LIGHTING

Overhead Fixture: Recessed
Lamp Wattage....: 2.00 W/sqft
Ballast Mult....: 1.25
Task Lighting...: 0.00 W/sqft

PEOPLE

Occupancy.....: 0 People
Activity Level..: Office Work
Sensible.....: 245.0 BTU/hr
Latent.....: 205.0 BTU/hr

OTHER LOADS

Equipment.....: 0.00 W/sqft
Misc. Sensible..: 0.0 BTU/hr
Misc. Latent....: 0.0 BTU/hr

SCHEDULES

Lighting....: BUILDING 642, FT DEVENS
Task Lights.: BUILDING 642, FT DEVENS
People.....: BUILDING 642, FT DEVENS
Equipment...: BUILDING 642, FT DEVENS
Misc. Sens..: BUILDING 642, FT DEVENS
Misc. Latent: BUILDING 642, FT DEVENS

INFILTRATION

Cooling.....: 0.00 CFM/sqft
Heating.....: 80.0 CFM
Typical.....: 40.0 CFM
When Fan On.? N

FLOOR

Type.....:Slab On Grade
Perimeter.....: 20.5 ft
Slab Floor Area.....: 793.0 sqft
Floor R-Value.....: 0.50
Insulation R-value....: 0.00

WALL Exp	Gross Area (sqft)	WALL Type	WINDOW Type	WINDOW Qty	WINDOW Shade	WINDOW Type	WINDOW Qty	WINDOW Shade	Any Doors?
N	205.0	3	4	2	-	1	2	-	N

No roof or door data for this space.

No partition data for this space.

SPACE DESCRIPTION

Prepared by: NEW ENGLAND DIVISION 12-10-94

HAP v3.04 Page 1

****

GENERAL

Name.....: BLDG 644, ASSEMBLY 113
Floor Area.....: 3422.3 sqft
Building Weight.: 130.0 lb/sqft
Windows Shaded..? N
Partitions Used.? N

LIGHTING

Overhead Fixture: Recessed
Lamp Wattage....: 2.00 W/sqft
Ballast Mult....: 1.25
Task Lighting...: 0.00 W/sqft

PEOPLE

Occupancy.....: 200 People
Activity Level..: Seated at Rest
Sensible.....: 230.0 BTU/hr
Latent.....: 120.0 BTU/hr

OTHER LOADS

Equipment.....: 0.00 W/sqft
Misc. Sensible..: 0.0 BTU/hr
Misc. Latent....: 0.0 BTU/hr

SCHEDULES

Lighting....: BUILDING 642, FT DEVENS
Task Lights.: BUILDING 642, FT DEVENS
People.....: BUILDING 642, FT DEVENS
Equipment...: BUILDING 642, FT DEVENS
Misc. Sens..: BUILDING 642, FT DEVENS
Misc. Latent: BUILDING 642, FT DEVENS

INFILTRATION

Cooling.....: 0.00 CFM/sqft
Heating.....: 400.0 CFM
Typical.....: 200.0 CFM
When Fan On.? N

FLOOR

Type.....:Above Unconditioned Space
Floor Area.....: 1237.0 sqft
U-value.....: 1.500
Max Space Temp.....: 80.0 F
Ambient Temp @ Max....: 90.0 F
Min Space Temp.....: 50.0 F
Ambient Temp @ Minimum: 0.0 F

WALL Exp	Gross Area (sqft)	WALL Type	WINDOW Type	WINDOW Qty	WINDOW Shade	WINDOW Type	WINDOW Qty	WINDOW Shade	Any Doors?
N	585.0	3	6	4	-	4	3	-	N
E	585.0	3	7	3	-	6	2	-	N
S	585.0	3	7	1	-	4	3	-	Y

ROOF Exp	Slope (deg)	Gross Area (sqft)	ROOF Type	SKYLIGHT Type	SKYLIGHT Qty
HOR	-	2067.0	2	1	0
-	-	-	-	-	-
-	-	-	-	-	-
-	-	-	-	-	-

DOOR

Gross Area..: 60.3 sqft
Uvalue.....: 0.300
Glass Area..: 0.0 sqft
Glass U-val.: 0.500
Shade Coeff.: 1.00
Glass Shaded? N

No partition data for this space.

SPACE DESCRIPTION

Prepared by: NEW ENGLAND DIVISION 12-10-94

HAP v3.04 Page 1

****

GENERAL

Name.....: BLDG 644, VESTIBULE 115
Floor Area.....: 39.0 sqft
Building Weight.: 130.0 lb/sqft
Windows Shaded..? N
Partitions Used.? N

LIGHTING

Overhead Fixture: Recessed
Lamp Wattage....: 2.00 W/sqft
Ballast Mult....: 1.25
Task Lighting...: 0.00 W/sqft

PEOPLE

Occupancy.....: 0 People
Activity Level..: Office Work
Sensible.....: 245.0 BTU/hr
Latent.....: 205.0 BTU/hr

OTHER LOADS

Equipment.....: 0.00 W/sqft
Misc. Sensible..: 0.0 BTU/hr
Misc. Latent....: 0.0 BTU/hr

SCHEDULES

Lighting....: BUILDING 642, FT DEVENS
Task Lights.: BUILDING 642, FT DEVENS
People.....: BUILDING 642, FT DEVENS
Equipment...: BUILDING 642, FT DEVENS
Misc. Sens..: BUILDING 642, FT DEVENS
Misc. Latent: BUILDING 642, FT DEVENS

INFILTRATION

Cooling.....: 0.00 CFM/sqft
Heating.....: 100.0 CFM
Typical.....: 50.0 CFM
When Fan On.? N

FLOOR

Type.....:Slab On Grade
Perimeter.....: 6.0 ft
Slab Floor Area.....: 39.0 sqft
Floor R-Value.....: 0.50
Insulation R-value....: 0.00

WALL Exp	Gross Area (sqft)	WALL Type	WINDOW Type	WINDOW Qty	WINDOW Shade	WINDOW Type	WINDOW Qty	WINDOW Shade	Any Doors?
E	60.0	3	6	0	-	1	0	-	Y

ROOF Exp	Slope (deg)	Gross Area (sqft)	ROOF Type	SKYLIGHT Type	SKYLIGHT Qty
-	-	-	-	-	-
-	-	-	-	-	-
-	-	-	-	-	-
-	-	-	-	-	-

DOOR

Gross Area..: 40.2 sqft
Uvalue.....: 0.300
Glass Area..: 0.0 sqft
Glass U-val.: 0.500
Shade Coeff.: 1.00
Glass Shaded? N

No partition data for this space.

SPACE DESCRIPTION

Prepared by: NEW ENGLAND DIVISION 12-10-94

HAP v3.04 Page 1

****

GENERAL

Name.....: BLDG 644, STORAGE 117
Floor Area.....: 793.0 sqft
Building Weight.: 130.0 lb/sqft
Windows Shaded..? N
Partitions Used.? N

LIGHTING

Overhead Fixture: Recessed
Lamp Wattage....: 2.00 W/sqft
Ballast Mult....: 1.25
Task Lighting...: 0.00 W/sqft

PEOPLE

Occupancy.....: 0 People
Activity Level..: Office Work
Sensible.....: 245.0 BTU/hr
Latent.....: 205.0 BTU/hr

OTHER LOADS

Equipment.....: 0.00 W/sqft
Misc. Sensible..: 0.0 BTU/hr
Misc. Latent....: 0.0 BTU/hr

SCHEDULES

Lighting....: BUILDING 642, FT DEVENS
Task Lights.: BUILDING 642, FT DEVENS
People.....: BUILDING 642, FT DEVENS
Equipment...: BUILDING 642, FT DEVENS
Misc. Sens..: BUILDING 642, FT DEVENS
Misc. Latent: BUILDING 642, FT DEVENS

INFILTRATION

Cooling.....: 0.00 CFM/sqft
Heating.....: 80.0 CFM
Typical.....: 40.0 CFM
When Fan On.? N

FLOOR

Type.....:Slab On Grade
Perimeter.....: 20.5 ft
Slab Floor Area.....: 793.0 sqft
Floor R-Value.....: 0.50
Insulation R-value....: 0.00

WALL Exp	Gross Area (sqft)	WALL Type	WINDOW Type	WINDOW Qty	WINDOW Shade	WINDOW Type	WINDOW Qty	WINDOW Shade	Any Doors?
S	205.0	3	4	2	-	1	2	-	N

No roof or door data for this space.

No partition data for this space.

SPACE DESCRIPTION

Prepared by: NEW ENGLAND DIVISION 12-10-94

HAP v3.04 Page 1

****

GENERAL

Name.....: BLDG 644, STORAGE 118
Floor Area.....: 255.0 sqft
Building Weight.: 130.0 lb/sqft
Windows Shaded..? N
Partitions Used.? N

LIGHTING

Overhead Fixture: Recessed
Lamp Wattage....: 2.00 W/sqft
Ballast Mult....: 1.25
Task Lighting...: 0.00 W/sqft

PEOPLE

Occupancy.....: 3 People
Activity Level..: Office Work
Sensible.....: 245.0 BTU/hr
Latent.....: 205.0 BTU/hr

OTHER LOADS

Equipment.....: 0.00 W/sqft
Misc. Sensible..: 0.0 BTU/hr
Misc. Latent....: 0.0 BTU/hr

SCHEDULES

Lighting....: BUILDING 642, FT DEVENS
Task Lights.: BUILDING 642, FT DEVENS
People.....: BUILDING 642, FT DEVENS
Equipment...: BUILDING 642, FT DEVENS
Misc. Sens..: BUILDING 642, FT DEVENS
Misc. Latent: BUILDING 642, FT DEVENS

INFILTRATION

Cooling.....: 0.00 CFM/sqft
Heating.....: 40.0 CFM
Typical.....: 20.0 CFM
When Fan On.? N

FLOOR

Type.....:Slab On Grade
Perimeter.....: 19.5 ft
Slab Floor Area.....: 255.0 sqft
Floor R-Value.....: 0.50
Insulation R-value....: 0.00

WALL Exp	Gross Area (sqft)	WALL Type	WINDOW Type	WINDOW Qty	WINDOW Shade	WINDOW Type	WINDOW Qty	WINDOW Shade	Any Doors?
E	195.0	3	2	2	-	1	0	-	N

No roof or door data for this space.

No partition data for this space.

SPACE DESCRIPTION

Prepared by: NEW ENGLAND DIVISION 12-10-94

HAP v3.04 Page 1

****

GENERAL

Name.....: BLDG 644, VAULT 122
Floor Area.....: 380.3 sqft
Building Weight.: 130.0 lb/sqft
Windows Shaded..? N
Partitions Used.? N

LIGHTING

Overhead Fixture: Recessed
Lamp Wattage....: 2.00 W/sqft
Ballast Mult....: 1.25
Task Lighting...: 0.00 W/sqft

PEOPLE

Occupancy.....: 0 People
Activity Level..: Office Work
Sensible.....: 245.0 BTU/hr
Latent.....: 205.0 BTU/hr

OTHER LOADS

Equipment.....: 0.00 W/sqft
Misc. Sensible..: 0.0 BTU/hr
Misc. Latent....: 0.0 BTU/hr

SCHEDULES

Lighting....: BUILDING 642, FT DEVENS
Task Lights.: BUILDING 642, FT DEVENS
People.....: BUILDING 642, FT DEVENS
Equipment...: BUILDING 642, FT DEVENS
Misc. Sens..: BUILDING 642, FT DEVENS
Misc. Latent: BUILDING 642, FT DEVENS

INFILTRATION

Cooling.....: 0.00 CFM/sqft
Heating.....: 0.0 CFM
Typical.....: 0.0 CFM
When Fan On.? N

FLOOR

Type.....:Slab On Grade
Perimeter.....: 7.0 ft
Slab Floor Area.....: 380.0 sqft
Floor R-Value.....: 0.50
Insulation R-value....: 0.00

WALL Exp	Gross Area (sqft)	WALL Type	WINDOW Type	WINDOW Qty	WINDOW Shade	WINDOW Type	WINDOW Qty	WINDOW Shade	Any Doors?
N	70.0	3	2	0	-	1	0	-	N

No roof or door data for this space.

No partition data for this space.

SPACE DESCRIPTION

Prepared by: NEW ENGLAND DIVISION 12-10-94

HAP v3.04 Page 1

****

GENERAL

Name.....: BLDG 644, STAGING 123
Floor Area.....: 487.5 sqft
Building Weight.: 130.0 lb/sqft
Windows Shaded..? N
Partitions Used.? N

LIGHTING

Overhead Fixture: Recessed
Lamp Wattage....: 2.00 W/sqft
Ballast Mult....: 1.25
Task Lighting...: 0.00 W/sqft

PEOPLE

Occupancy.....: 0 People
Activity Level..: Heavy Work
Sensible.....: 525.0 BTU/hr
Latent.....: 925.0 BTU/hr

OTHER LOADS

Equipment.....: 0.00 W/sqft
Misc. Sensible..: 0.0 BTU/hr
Misc. Latent....: 0.0 BTU/hr

SCHEDULES

Lighting....: BUILDING 642, FT DEVENS
Task Lights.: BUILDING 642, FT DEVENS
People.....: BUILDING 642, FT DEVENS
Equipment...: BUILDING 642, FT DEVENS
Misc. Sens..: BUILDING 642, FT DEVENS
Misc. Latent: BUILDING 642, FT DEVENS

INFILTRATION

Cooling.....: 0.00 CFM/sqft
Heating.....: 100.0 CFM
Typical.....: 50.0 CFM
When Fan On.? N

FLOOR

Type.....:Slab On Grade
Perimeter.....: 25.0 ft
Slab Floor Area.....: 487.5 sqft
Floor R-Value.....: 0.50
Insulation R-value....: 0.00

WALL Exp	Gross Area (sqft)	WALL Type	WINDOW Type	WINDOW Qty	WINDOW Shade	WINDOW Type	WINDOW Qty	WINDOW Shade	Any Doors?
N	250.0	3	2	3	-	1	0	-	Y

ROOF Exp	Slope (deg)	Gross Area (sqft)	ROOF Type	SKYLIGHT Type	SKYLIGHT Qty
-	-	-	-	-	-
-	-	-	-	-	-
-	-	-	-	-	-
-	-	-	-	-	-

DOOR

Gross Area..: 20.1 sqft
Uvalue.....: 0.300
Glass Area..: 0.0 sqft
Glass U-val.: 0.500
Shade Coeff.: 1.00
Glass Shaded? N

No partition data for this space.

SPACE DESCRIPTION

Prepared by: NEW ENGLAND DIVISION 12-10-94

HAP v3.04 Page 1

****

GENERAL

Name.....: BLDG 644, RECEIVING 124
Floor Area.....: 253.5 sqft
Building Weight.: 130.0 lb/sqft
Windows Shaded..? N
Partitions Used.? N

LIGHTING

Overhead Fixture: Recessed
Lamp Wattage....: 2.00 W/sqft
Ballast Mult....: 1.25
Task Lighting...: 0.00 W/sqft

PEOPLE

Occupancy.....: 0 People
Activity Level..: Office Work
Sensible.....: 245.0 BTU/hr
Latent.....: 205.0 BTU/hr

OTHER LOADS

Equipment.....: 0.00 W/sqft
Misc. Sensible..: 0.0 BTU/hr
Misc. Latent....: 0.0 BTU/hr

SCHEDULES

Lighting....: BUILDING 642, FT DEVENS
Task Lights.: BUILDING 642, FT DEVENS
People.....: BUILDING 642, FT DEVENS
Equipment...: BUILDING 642, FT DEVENS
Misc. Sens..: BUILDING 642, FT DEVENS
Misc. Latent: BUILDING 642, FT DEVENS

INFILTRATION

Cooling.....: 0.00 CFM/sqft
Heating.....: 40.0 CFM
Typical.....: 20.0 CFM
When Fan On.? N

FLOOR

Type.....:Slab On Grade
Perimeter.....: 32.5 ft
Slab Floor Area.....: 253.5 sqft
Floor R-Value.....: 0.50
Insulation R-value....: 0.00

WALL Exp	Gross Area (sqft)	WALL Type	WINDOW Type	WINDOW Qty	WINDOW Shade	WINDOW Type	WINDOW Qty	WINDOW Shade	Any Doors?
E	195.0	3	2	0	-	1	0	-	N
N	130.0	3	2	1	-	1	0	-	Y

ROOF Exp	Slope (deg)	Gross Area (sqft)	ROOF Type	SKYLIGHT Type	SKYLIGHT Qty
-	-	-	-	-	-
-	-	-	-	-	-
-	-	-	-	-	-
-	-	-	-	-	-

DOOR

Gross Area..: 40.2 sqft
Uvalue.....: 0.300
Glass Area..: 0.0 sqft
Glass U-val.: 0.500
Shade Coeff.: 1.00
Glass Shaded? N

No partition data for this space.

SPACE DESCRIPTION

Prepared by: NEW ENGLAND DIVISION 12-10-94

HAP v3.04 Page 1

****

GENERAL

Name.....: BLDG 644, STORAGE 125

Floor Area.....: 273.0 sqft

Building Weight.: 130.0 lb/sqft

Windows Shaded..? N

Partitions Used.? N

LIGHTING

Overhead Fixture: Recessed

Lamp Wattage....: 2.00 W/sqft

Ballast Mult....: 1.25

Task Lighting...: 0.00 W/sqft

PEOPLE

Occupancy.....: 0 People

Activity Level..: Office Work

Sensible.....: 245.0 BTU/hr

Latent.....: 205.0 BTU/hr

OTHER LOADS

Equipment.....: 0.00 W/sqft

Misc. Sensible..: 0.0 BTU/hr

Misc. Latent....: 0.0 BTU/hr

SCHEDULES

Lighting....: BUILDING 642, FT DEVENS

Task Lights.: BUILDING 642, FT DEVENS

People.....: BUILDING 642, FT DEVENS

Equipment...: BUILDING 642, FT DEVENS

Misc. Sens..: BUILDING 642, FT DEVENS

Misc. Latent: BUILDING 642, FT DEVENS

INFILTRATION

Cooling.....: 0.00 CFM/sqft

Heating.....: 60.0 CFM

Typical.....: 30.0 CFM

When Fan On.? N

FLOOR

Type.....:Slab On Grade

Perimeter.....: 33.5 ft

Slab Floor Area.....: 273.0 sqft

Floor R-Value.....: 0.50

Insulation R-value....: 0.00

WALL Exp	Gross Area (sqft)	WALL Type	WINDOW Type	WINDOW Qty	WINDOW Shade	WINDOW Type	WINDOW Qty	WINDOW Shade	Any Doors?
S	195.0	3	2	3	-	1	0	-	N
E	140.0	3	2	0	-	1	0	-	N

No roof or door data for this space.

No partition data for this space.

SPACE DESCRIPTION

Prepared by: NEW ENGLAND DIVISION
HAP v3.04

12-10-94
Page 1

****

GENERAL
Name.....: 644, 126, 127, 128 & 129
Floor Area.....: 273.0 sqft
Building Weight.: 130.0 lb/sqft
Windows Shaded..? N
Partitions Used.? N

LIGHTING
Overhead Fixture: Recessed
Lamp Wattage....: 2.00 W/sqft
Ballast Mult....: 1.25
Task Lighting...: 0.00 W/sqft

PEOPLE
Occupancy.....: 0 People
Activity Level..: Office Work
Sensible.....: 245.0 BTU/hr
Latent.....: 205.0 BTU/hr

OTHER LOADS
Equipment.....: 0.00 W/sqft
Misc. Sensible..: 0.0 BTU/hr
Misc. Latent....: 0.0 BTU/hr

SCHEDULES
Lighting....: BUILDING 642, FT DEVENS
Task Lights.: BUILDING 642, FT DEVENS
People.....: BUILDING 642, FT DEVENS
Equipment...: BUILDING 642, FT DEVENS
Misc. Sens..: BUILDING 642, FT DEVENS
Misc. Latent: BUILDING 642, FT DEVENS

INFILTRATION
Cooling.....: 0.00 CFM/sqft
Heating.....: 60.0 CFM
Typical.....: 30.0 CFM
When Fan On.? N

FLOOR
Type.....:Slab On Grade
Perimeter.....: 19.5 ft
Slab Floor Area.....: 273.0 sqft
Floor R-Value.....: 0.50
Insulation R-value....: 0.00

WALL Exp	Gross Area (sqft)	WALL Type	WINDOW Type	WINDOW Qty	WINDOW Shade	WINDOW Type	WINDOW Qty	WINDOW Shade	Any Doors?
S	195.0	3	2	3	-	1	0	-	N

No roof or door data for this space.

No partition data for this space.

SPACE DESCRIPTION

Prepared by: NEW ENGLAND DIVISION 12-10-94

HAP v3.04 Page 1

****

GENERAL

Name.....: BLDG 644, STORAGE 130
Floor Area.....: 273.0 sqft
Building Weight.: 130.0 lb/sqft
Windows Shaded..? N
Partitions Used.? N

LIGHTING

Overhead Fixture: Recessed
Lamp Wattage....: 2.00 W/sqft
Ballast Mult....: 1.25
Task Lighting...: 0.00 W/sqft

PEOPLE

Occupancy.....: 0 People
Activity Level..: Office Work
Sensible.....: 245.0 BTU/hr
Latent.....: 205.0 BTU/hr

OTHER LOADS

Equipment.....: 0.00 W/sqft
Misc. Sensible..: 0.0 BTU/hr
Misc. Latent....: 0.0 BTU/hr

SCHEDULES

Lighting....: BUILDING 642, FT DEVENS
Task Lights.: BUILDING 642, FT DEVENS
People.....: BUILDING 642, FT DEVENS
Equipment...: BUILDING 642, FT DEVENS
Misc. Sens..: BUILDING 642, FT DEVENS
Misc. Latent: BUILDING 642, FT DEVENS

INFILTRATION

Cooling.....: 0.00 CFM/sqft
Heating.....: 60.0 CFM
Typical.....: 30.0 CFM
When Fan On.? N

FLOOR

Type.....:Slab On Grade
Perimeter.....: 33.5 ft
Slab Floor Area.....: 273.0 sqft
Floor R-Value.....: 0.50
Insulation R-value....: 0.00

WALL Exp	Gross Area (sqft)	WALL Type	WINDOW Type	WINDOW Qty	WINDOW Shade	WINDOW Type	WINDOW Qty	WINDOW Shade	Any Doors?
S	195.0	3	2	3	-	1	0	-	N
W	140.0	3	2	2	-	1	0	-	N

No roof or door data for this space.

No partition data for this space.

SPACE DESCRIPTION

Prepared by: NEW ENGLAND DIVISION

HAP v3.04

12-10-94

Page 1

****

GENERAL

Name.....: BLDG 644, STORAGE 131
Floor Area.....: 380.3 sqft
Building Weight.: 130.0 lb/sqft
Windows Shaded..? N
Partitions Used.? N

LIGHTING

Overhead Fixture: Recessed
Lamp Wattage....: 2.00 W/sqft
Ballast Mult....: 1.25
Task Lighting...: 0.00 W/sqft

PEOPLE

Occupancy.....: 0 People
Activity Level..: Office Work
Sensible.....: 245.0 BTU/hr
Latent.....: 205.0 BTU/hr

OTHER LOADS

Equipment.....: 0.00 W/sqft
Misc. Sensible..: 0.0 BTU/hr
Misc. Latent....: 0.0 BTU/hr

SCHEDULES

Lighting....: BUILDING 642, FT DEVENS
Task Lights.: BUILDING 642, FT DEVENS
People.....: BUILDING 642, FT DEVENS
Equipment...: BUILDING 642, FT DEVENS
Misc. Sens..: BUILDING 642, FT DEVENS
Misc. Latent: BUILDING 642, FT DEVENS

INFILTRATION

Cooling.....: 0.00 CFM/sqft
Heating.....: 60.0 CFM
Typical.....: 30.0 CFM
When Fan On.? N

FLOOR

Type.....:Slab On Grade
Perimeter.....: 39.0 ft
Slab Floor Area.....: 380.3 sqft
Floor R-Value.....: 0.50
Insulation R-value....: 0.00

WALL Exp	Gross Area (sqft)	WALL Type	WINDOW Type	WINDOW Qty	WINDOW Shade	WINDOW Type	WINDOW Qty	WINDOW Shade	Any Doors?
N	195.0	3	2	3	-	1	0	-	N
W	195.0	3	2	0	-	1	0	-	N

No roof or door data for this space.

No partition data for this space.

SPACE DESCRIPTION

Prepared by: NEW ENGLAND DIVISION 12-10-94

HAP v3.04 Page 1

****

GENERAL

Name.....: BLDG 644, STORAGE 132

Floor Area.....: 380.3 sqft

Building Weight.: 130.0 lb/sqft

Windows Shaded..? N

Partitions Used.? N

LIGHTING

Overhead Fixture: Recessed

Lamp Wattage....: 2.00 W/sqft

Ballast Mult....: 1.25

Task Lighting...: 0.00 W/sqft

PEOPLE

Occupancy.....: 0 People

Activity Level..: Office Work

Sensible.....: 245.0 BTU/hr

Latent.....: 205.0 BTU/hr

OTHER LOADS

Equipment.....: 0.00 W/sqft

Misc. Sensible..: 0.0 BTU/hr

Misc. Latent....: 0.0 BTU/hr

SCHEDULES

Lighting....: BUILDING 642, FT DEVENS

Task Lights.: BUILDING 642, FT DEVENS

People.....: BUILDING 642, FT DEVENS

Equipment...: BUILDING 642, FT DEVENS

Misc. Sens..: BUILDING 642, FT DEVENS

Misc. Latent: BUILDING 642, FT DEVENS

INFILTRATION

Cooling.....: 0.00 CFM/sqft

Heating.....: 40.0 CFM

Typical.....: 20.0 CFM

When Fan On.? N

FLOOR

Type.....:Slab On Grade

Perimeter.....: 19.5 ft

Slab Floor Area.....: 380.3 sqft

Floor R-Value.....: 0.50

Insulation R-value....: 0.00

WALL Exp	Gross Area (sqft)	WALL Type	WINDOW Type	WINDOW Qty	WINDOW Shade	WINDOW Type	WINDOW Qty	WINDOW Shade	Any Doors?
N	195.0	3	2	2	-	1	0	-	N

No roof or door data for this space.

No partition data for this space.

SPACE DESCRIPTION

Prepared by: NEW ENGLAND DIVISION 12-10-94

HAP v3.04 Page 1

****

GENERAL

Name.....: BLDG 644, LOBBY 135
Floor Area.....: 273.0 sqft
Building Weight.: 130.0 lb/sqft
Windows Shaded..? N
Partitions Used.? N

LIGHTING

Overhead Fixture: Recessed
Lamp Wattage....: 2.00 W/sqft
Ballast Mult....: 1.25
Task Lighting...: 0.00 W/sqft

PEOPLE

Occupancy.....: 4 People
Activity Level..: Office Work
Sensible.....: 245.0 BTU/hr
Latent.....: 205.0 BTU/hr

OTHER LOADS

Equipment.....: 0.00 W/sqft
Misc. Sensible..: 0.0 BTU/hr
Misc. Latent....: 0.0 BTU/hr

SCHEDULES

Lighting....: BUILDING 642, FT DEVENS
Task Lights.: BUILDING 642, FT DEVENS
People.....: BUILDING 642, FT DEVENS
Equipment...: BUILDING 642, FT DEVENS
Misc. Sens..: BUILDING 642, FT DEVENS
Misc. Latent: BUILDING 642, FT DEVENS

INFILTRATION

Cooling.....: 0.00 CFM/sqft
Heating.....: 60.0 CFM
Typical.....: 30.0 CFM
When Fan On.? N

FLOOR

Type.....:Slab On Grade
Perimeter.....: 19.5 ft
Slab Floor Area.....: 273.0 sqft
Floor R-Value.....: 0.50
Insulation R-value....: 0.00

WALL Exp	Gross Area (sqft)	WALL Type	WINDOW Type	WINDOW Qty	WINDOW Shade	WINDOW Type	WINDOW Qty	WINDOW Shade	Any Doors?
W	195.0	3	2	3	-	1	0	-	N

No roof or door data for this space.

No partition data for this space.

SPACE DESCRIPTION

Prepared by: NEW ENGLAND DIVISION 12-10-94

HAP v3.04 Page 1

****

GENERAL

Name.....: 644, 136, 137, 138 & 139
Floor Area.....: 273.0 sqft
Building Weight.: 130.0 lb/sqft
Windows Shaded..? N
Partitions Used.? N

LIGHTING

Overhead Fixture: Recessed
Lamp Wattage....: 2.00 W/sqft
Ballast Mult....: 1.25
Task Lighting...: 0.00 W/sqft

PEOPLE

Occupancy.....: 3 People
Activity Level..: Office Work
Sensible.....: 245.0 BTU/hr
Latent.....: 205.0 BTU/hr

OTHER LOADS

Equipment.....: 0.00 W/sqft
Misc. Sensible..: 0.0 BTU/hr
Misc. Latent....: 0.0 BTU/hr

SCHEDULES

Lighting....: BUILDING 642, FT DEVENS
Task Lights.: BUILDING 642, FT DEVENS
People.....: BUILDING 642, FT DEVENS
Equipment...: BUILDING 642, FT DEVENS
Misc. Sens..: BUILDING 642, FT DEVENS
Misc. Latent: BUILDING 642, FT DEVENS

INFILTRATION

Cooling.....: 0.00 CFM/sqft
Heating.....: 60.0 CFM
Typical.....: 30.0 CFM
When Fan On.? N

FLOOR

Type.....:Slab On Grade
Perimeter.....: 19.5 ft
Slab Floor Area.....: 273.0 sqft
Floor R-Value.....: 0.50
Insulation R-value....: 0.00

WALL Exp	Gross Area (sqft)	WALL Type	WINDOW Type	WINDOW Qty	WINDOW Shade	WINDOW Type	WINDOW Qty	WINDOW Shade	Any Doors?
W	195.0	3	2	3	-	1	0	-	N

No roof or door data for this space.

No partition data for this space.

SPACE DESCRIPTION

Prepared by: NEW ENGLAND DIVISION
HAP v3.04

12-10-94
Page 1

****

GENERAL
Name.....: BLDG 644, ELECTRIC 140
Floor Area.....: 182.0 sqft
Building Weight.: 130.0 lb/sqft
Windows Shaded..? N
Partitions Used.? N

LIGHTING
Overhead Fixture: Recessed
Lamp Wattage....: 2.00 W/sqft
Ballast Mult....: 1.25
Task Lighting...: 0.00 W/sqft

PEOPLE
Occupancy.....: 0 People
Activity Level..: Office Work
Sensible.....: 245.0 BTU/hr
Latent.....: 205.0 BTU/hr

OTHER LOADS
Equipment.....: 0.00 W/sqft
Misc. Sensible..: 0.0 BTU/hr
Misc. Latent....: 0.0 BTU/hr

SCHEDULES
Lighting....: BUILDING 642, FT DEVENS
Task Lights.: BUILDING 642, FT DEVENS
People.....: BUILDING 642, FT DEVENS
Equipment...: BUILDING 642, FT DEVENS
Misc. Sens..: BUILDING 642, FT DEVENS
Misc. Latent: BUILDING 642, FT DEVENS

INFILTRATION
Cooling.....: 0.00 CFM/sqft
Heating.....: 40.0 CFM
Typical.....: 20.0 CFM
When Fan On.? N

FLOOR
Type.....:Slab On Grade
Perimeter.....: 13.0 ft
Slab Floor Area.....: 182.0 sqft
Floor R-Value.....: 0.50
Insulation R-value....: 0.00

WALL Exp	Gross Area (sqft)	WALL Type	WINDOW Type	WINDOW Qty	WINDOW Shade	WINDOW Type	WINDOW Qty	WINDOW Shade	Any Doors?
W	130.0	3	2	2	-	1	0	-	N

No roof or door data for this space.

No partition data for this space.

SPACE DESCRIPTION

Prepared by: NEW ENGLAND DIVISION 12-10-94

HAP v3.04 Page 1

****

GENERAL

Name.....: BLDG 644, TELEPHONE 141
Floor Area.....: 91.0 sqft
Building Weight.: 130.0 lb/sqft
Windows Shaded..? N
Partitions Used.? N

LIGHTING

Overhead Fixture: Recessed
Lamp Wattage....: 2.00 W/sqft
Ballast Mult....: 1.25
Task Lighting...: 0.00 W/sqft

PEOPLE

Occupancy.....: 0 People
Activity Level..: Office Work
Sensible.....: 245.0 BTU/hr
Latent.....: 205.0 BTU/hr

OTHER LOADS

Equipment.....: 0.00 W/sqft
Misc. Sensible..: 0.0 BTU/hr
Misc. Latent....: 0.0 BTU/hr

SCHEDULES

Lighting....: BUILDING 642, FT DEVENS
Task Lights.: BUILDING 642, FT DEVENS
People.....: BUILDING 642, FT DEVENS
Equipment...: BUILDING 642, FT DEVENS
Misc. Sens..: BUILDING 642, FT DEVENS
Misc. Latent: BUILDING 642, FT DEVENS

INFILTRATION

Cooling.....: 0.00 CFM/sqft
Heating.....: 20.0 CFM
Typical.....: 10.0 CFM
When Fan On.? N

FLOOR

Type.....:Slab On Grade
Perimeter.....: 6.5 ft
Slab Floor Area.....: 91.0 sqft
Floor R-Value.....: 0.50
Insulation R-value....: 0.00

WALL Exp	Gross Area (sqft)	WALL Type	WINDOW Type	WINDOW Qty	WINDOW Shade	WINDOW Type	WINDOW Qty	WINDOW Shade	Any Doors?
W	65.0	3	2	1	-	1	0	-	N

No roof or door data for this space.

No partition data for this space.

SPACE DESCRIPTION

Prepared by: NEW ENGLAND DIVISION 12-10-94
HAP v3.04 Page 1

****

GENERAL
Name.....: BLDG 644, C11 & C17
Floor Area.....: 292.5 sqft
Building Weight.: 130.0 lb/sqft
Windows Shaded..? N
Partitions Used.? N

LIGHTING
Overhead Fixture: Recessed
Lamp Wattage....: 2.00 W/sqft
Ballast Mult....: 1.25
Task Lighting...: 0.00 W/sqft

PEOPLE
Occupancy.....: 0 People
Activity Level..: Office Work
Sensible.....: 245.0 BTU/hr
Latent.....: 205.0 BTU/hr

OTHER LOADS
Equipment.....: 0.00 W/sqft
Misc. Sensible..: 0.0 BTU/hr
Misc. Latent....: 0.0 BTU/hr

SCHEDULES
Lighting....: BUILDING 642, FT DEVENS
Task Lights.: BUILDING 642, FT DEVENS
People.....: BUILDING 642, FT DEVENS
Equipment...: BUILDING 642, FT DEVENS
Misc. Sens..: BUILDING 642, FT DEVENS
Misc. Latent: BUILDING 642, FT DEVENS

INFILTRATION
Cooling.....: 0.00 CFM/sqft
Heating.....: 40.0 CFM
Typical.....: 20.0 CFM
When Fan On.? N

FLOOR
Type.....:Slab On Grade
Perimeter.....: 5.0 ft
Slab Floor Area.....: 292.5 sqft
Floor R-Value.....: 0.50
Insulation R-value....: 0.00

WALL Exp	Gross Area (sqft)	WALL Type	WINDOW Type	WINDOW Qty	WINDOW Shade	WINDOW Type	WINDOW Qty	WINDOW Shade	Any Doors?
W	50.0	3	1	0	-	1	0	-	Y

ROOF Exp	Slope (deg)	Gross Area (sqft)	ROOF Type	SKYLIGHT Type	SKYLIGHT Qty
-	-	-	-	-	-
-	-	-	-	-	-
-	-	-	-	-	-
-	-	-	-	-	-

DOOR
Gross Area..: 20.1 sqft
Uvalue.....: 0.300
Glass Area..: 0.0 sqft
Glass U-val.: 0.500
Shade Coeff.: 1.00
Glass Shaded? N

No partition data for this space.

SPACE DESCRIPTION

Prepared by: NEW ENGLAND DIVISION 12-10-94

HAP v3.04 Page 1

****

GENERAL

Name.....: BLDG 644, C18

Floor Area.....: 277.9 sqft

Building Weight.: 130.0 lb/sqft

Windows Shaded..? N

Partitions Used.? N

LIGHTING

Overhead Fixture: Recessed

Lamp Wattage....: 2.00 W/sqft

Ballast Mult....: 1.25

Task Lighting...: 0.00 W/sqft

PEOPLE

Occupancy.....: 0 People

Activity Level..: Office Work

Sensible.....: 245.0 BTU/hr

Latent.....: 205.0 BTU/hr

OTHER LOADS

Equipment.....: 0.00 W/sqft

Misc. Sensible..: 0.0 BTU/hr

Misc. Latent....: 0.0 BTU/hr

SCHEDULES

Lighting....: BUILDING 642, FT DEVENS

Task Lights.: BUILDING 642, FT DEVENS

People.....: BUILDING 642, FT DEVENS

Equipment...: BUILDING 642, FT DEVENS

Misc. Sens..: BUILDING 642, FT DEVENS

Misc. Latent: BUILDING 642, FT DEVENS

INFILTRATION

Cooling.....: 0.00 CFM/sqft

Heating.....: 40.0 CFM

Typical.....: 20.0 CFM

When Fan On.? N

FLOOR

Type.....:Slab On Grade

Perimeter.....: 0.0 ft

Slab Floor Area.....: 277.9 sqft

Floor R-Value.....: 0.50

Insulation R-value....: 0.00

WALL Exp	Gross Area (sqft)	WALL Type	WINDOW Type	WINDOW Qty	WINDOW Shade	WINDOW Type	WINDOW Qty	WINDOW Shade	Any Doors?
E	50.0	3	1	0	-	1	0	-	Y

ROOF Exp	Slope (deg)	Gross Area (sqft)	ROOF Type	SKYLIGHT Type	SKYLIGHT Qty
-	-	-	-	-	-
-	-	-	-	-	-
-	-	-	-	-	-
-	-	-	-	-	-

DOOR

Gross Area..: 20.1 sqft

Uvalue.....: 0.300

Glass Area..: 0.0 sqft

Glass U-val.: 0.500

Shade Coeff.: 1.00

Glass Shaded? N

No partition data for this space.

SPACE DESCRIPTION

Prepared by: NEW ENGLAND DIVISION
HAP v3.04

12-10-94
Page 1

****

GENERAL
Name.....: BLDG 644, C13 & C15
Floor Area.....: 94.5 sqft
Building Weight.: 130.0 lb/sqft
Windows Shaded..? N
Partitions Used.? N

LIGHTING
Overhead Fixture: Recessed
Lamp Wattage....: 2.00 W/sqft
Ballast Mult....: 1.25
Task Lighting...: 0.00 W/sqft

PEOPLE
Occupancy.....: 0 People
Activity Level..: Office Work
Sensible.....: 245.0 BTU/hr
Latent.....: 205.0 BTU/hr

OTHER LOADS
Equipment.....: 0.00 W/sqft
Misc. Sensible..: 0.0 BTU/hr
Misc. Latent....: 0.0 BTU/hr

SCHEDULES
Lighting....: BUILDING 642, FT DEVENS
Task Lights.: BUILDING 642, FT DEVENS
People.....: BUILDING 642, FT DEVENS
Equipment...: BUILDING 642, FT DEVENS
Misc. Sens..: BUILDING 642, FT DEVENS
Misc. Latent: BUILDING 642, FT DEVENS

INFILTRATION
Cooling.....: 0.00 CFM/sqft
Heating.....: 100.0 CFM
Typical.....: 50.0 CFM
When Fan On.? N

FLOOR
Type.....:Slab On Grade
Perimeter.....: 7.0 ft
Slab Floor Area.....: 94.5 sqft
Floor R-Value.....: 0.50
Insulation R-value....: 0.00

WALL Exp	Gross Area (sqft)	WALL Type	WINDOW Type	WINDOW Qty	WINDOW Shade	WINDOW Type	WINDOW Qty	WINDOW Shade	Any Doors?
E	70.0	3	1	0	-	1	0	-	Y

ROOF Exp	Slope (deg)	Gross Area (sqft)	ROOF Type	SKYLIGHT Type	SKYLIGHT Qty
-	-	-	-	-	-
-	-	-	-	-	-
-	-	-	-	-	-
-	-	-	-	-	-

DOOR
Gross Area..: 20.1 sqft
Uvalue.....: 0.300
Glass Area..: 0.0 sqft
Glass U-val.: 0.500
Shade Coeff.: 1.00
Glass Shaded? N

No partition data for this space.

SPACE DESCRIPTION

Prepared by: NEW ENGLAND DIVISION 12-10-94

HAP v3.04 Page 1

****

GENERAL

Name.....: BLDG 644, C14

Floor Area.....: 511.9 sqft

Building Weight.: 130.0 lb/sqft

Windows Shaded..? N

Partitions Used.? N

LIGHTING

Overhead Fixture: Recessed

Lamp Wattage....: 2.00 W/sqft

Ballast Mult....: 1.25

Task Lighting...: 0.00 W/sqft

PEOPLE

Occupancy.....: 0 People

Activity Level..: Office Work

Sensible.....: 245.0 BTU/hr

Latent.....: 205.0 BTU/hr

OTHER LOADS

Equipment.....: 0.00 W/sqft

Misc. Sensible..: 0.0 BTU/hr

Misc. Latent....: 0.0 BTU/hr

SCHEDULES

Lighting....: BUILDING 642, FT DEVENS

Task Lights.: BUILDING 642, FT DEVENS

People.....: BUILDING 642, FT DEVENS

Equipment...: BUILDING 642, FT DEVENS

Misc. Sens..: BUILDING 642, FT DEVENS

Misc. Latent: BUILDING 642, FT DEVENS

INFILTRATION

Cooling.....: 0.00 CFM/sqft

Heating.....: 0.0 CFM

Typical.....: 0.0 CFM

When Fan On.? N

FLOOR

Type.....:Slab On Grade

Perimeter.....: 0.0 ft

Slab Floor Area.....: 510.0 sqft

Floor R-Value.....: 0.50

Insulation R-value....: 0.00

==========

No external wall or window data for this space.

==========

No roof or door data for this space.

==========

No partition data for this space.

==========

SPACE DESCRIPTION

Prepared by: NEW ENGLAND DIVISION 12-10-94

HAP v3.04 Page 1

****

GENERAL

Name.....: BLDG 644, C12 & C16

Floor Area.....: 341.0 sqft

Building Weight.: 130.0 lb/sqft

Windows Shaded..? N

Partitions Used.? N

LIGHTING

Overhead Fixture: Recessed

Lamp Wattage....: 2.00 W/sqft

Ballast Mult....: 1.25

Task Lighting...: 0.00 W/sqft

PEOPLE

Occupancy.....: 0 People

Activity Level..: Office Work

Sensible.....: 245.0 BTU/hr

Latent.....: 205.0 BTU/hr

OTHER LOADS

Equipment.....: 0.00 W/sqft

Misc. Sensible..: 0.0 BTU/hr

Misc. Latent....: 0.0 BTU/hr

SCHEDULES

Lighting....: BUILDING 642, FT DEVENS

Task Lights.: BUILDING 642, FT DEVENS

People.....: BUILDING 642, FT DEVENS

Equipment...: BUILDING 642, FT DEVENS

Misc. Sens..: BUILDING 642, FT DEVENS

Misc. Latent: BUILDING 642, FT DEVENS

INFILTRATION

Cooling.....: 0.00 CFM/sqft

Heating.....: 0.0 CFM

Typical.....: 0.0 CFM

When Fan On.? N

FLOOR

Type.....:Slab On Grade

Perimeter.....: 0.0 ft

Slab Floor Area.....: 341.0 sqft

Floor R-Value.....: 0.50

Insulation R-value....: 0.00

==========

No external wall or window data for this space.

==========

No roof or door data for this space.

==========

No partition data for this space.

==========

SPACE DESCRIPTION

Prepared by: NEW ENGLAND DIVISION 12-10-94

HAP v3.04 Page 1

****

GENERAL

Name.....: BLDG 644, STAIRS S11/S12
Floor Area.....: 126.0 sqft
Building Weight.: 130.0 lb/sqft
Windows Shaded..? N
Partitions Used.? N

LIGHTING

Overhead Fixture: Recessed
Lamp Wattage....: 2.00 W/sqft
Ballast Mult....: 1.25
Task Lighting...: 0.00 W/sqft

PEOPLE

Occupancy.....: 0 People
Activity Level..: Office Work
Sensible.....: 245.0 BTU/hr
Latent.....: 205.0 BTU/hr

OTHER LOADS

Equipment.....: 0.00 W/sqft
Misc. Sensible..: 0.0 BTU/hr
Misc. Latent....: 0.0 BTU/hr

SCHEDULES

Lighting....: BUILDING 642, FT DEVENS
Task Lights.: BUILDING 642, FT DEVENS
People.....: BUILDING 642, FT DEVENS
Equipment...: BUILDING 642, FT DEVENS
Misc. Sens..: BUILDING 642, FT DEVENS
Misc. Latent: BUILDING 642, FT DEVENS

INFILTRATION

Cooling.....: 0.00 CFM/sqft
Heating.....: 0.0 CFM
Typical.....: 0.0 CFM
When Fan On.? N

FLOOR

Type.....:Slab On Grade
Perimeter.....: 9.0 ft
Slab Floor Area.....: 126.0 sqft
Floor R-Value.....: 0.50
Insulation R-value....: 0.00

WALL Exp	Gross Area (sqft)	WALL Type	WINDOW Type	WINDOW Qty	WINDOW Shade	WINDOW Type	WINDOW Qty	WINDOW Shade	Any Doors?
W	90.0	3	2	0	-	1	0	-	N

No roof or door data for this space.

No partition data for this space.

SPACE DESCRIPTION

Prepared by: NEW ENGLAND DIVISION 12-10-94

HAP v3.04 Page 1

****

GENERAL

Name.....: BLDG 644, VEST 134 & 142
Floor Area.....: 147.0 sqft
Building Weight.: 130.0 lb/sqft
Windows Shaded..? N
Partitions Used.? N

LIGHTING

Overhead Fixture: Recessed
Lamp Wattage....: 2.00 W/sqft
Ballast Mult....: 1.25
Task Lighting...: 0.00 W/sqft

PEOPLE

Occupancy.....: 0 People
Activity Level..: Office Work
Sensible.....: 245.0 BTU/hr
Latent.....: 205.0 BTU/hr

OTHER LOADS

Equipment.....: 0.00 W/sqft
Misc. Sensible..: 0.0 BTU/hr
Misc. Latent....: 0.0 BTU/hr

SCHEDULES

Lighting....: BUILDING 642, FT DEVENS
Task Lights.: BUILDING 642, FT DEVENS
People.....: BUILDING 642, FT DEVENS
Equipment...: BUILDING 642, FT DEVENS
Misc. Sens..: BUILDING 642, FT DEVENS
Misc. Latent: BUILDING 642, FT DEVENS

INFILTRATION

Cooling.....: 0.00 CFM/sqft
Heating.....: 100.0 CFM
Typical.....: 50.0 CFM
When Fan On.? N

FLOOR

Type.....:Slab On Grade
Perimeter.....: 10.5 ft
Slab Floor Area.....: 147.0 sqft
Floor R-Value.....: 0.50
Insulation R-value....: 0.00

WALL Exp	Gross Area (sqft)	WALL Type	WINDOW Type	WINDOW Qty	WINDOW Shade	WINDOW Type	WINDOW Qty	WINDOW Shade	Any Doors?
W	105.0	3	2	0	-	1	0	-	Y

ROOF Exp	Slope (deg)	Gross Area (sqft)	ROOF Type	SKYLIGHT Type	SKYLIGHT Qty
-	-	-	-	-	-
-	-	-	-	-	-
-	-	-	-	-	-
-	-	-	-	-	-

DOOR

Gross Area..: 35.0 sqft
Uvalue.....: 0.300
Glass Area..: 1.5 sqft
Glass U-val.: 1.000
Shade Coeff.: 1.00
Glass Shaded? N

No partition data for this space.

SPACE DESCRIPTION

Prepared by: NEW ENGLAND DIVISION 12-10-94

HAP v3.04 Page 1

****

GENERAL

Name.....: BLDG 644, STOR 201 & 202
Floor Area.....: 164.0 sqft
Building Weight.: 130.0 lb/sqft
Windows Shaded..? N
Partitions Used.? N

LIGHTING

Overhead Fixture: Recessed
Lamp Wattage....: 2.00 W/sqft
Ballast Mult....: 1.25
Task Lighting...: 0.00 W/sqft

PEOPLE

Occupancy.....: 0 People
Activity Level..: Office Work
Sensible.....: 245.0 BTU/hr
Latent.....: 205.0 BTU/hr

OTHER LOADS

Equipment.....: 0.00 W/sqft
Misc. Sensible..: 0.0 BTU/hr
Misc. Latent....: 0.0 BTU/hr

SCHEDULES

Lighting....: BUILDING 642, FT DEVENS
Task Lights.: BUILDING 642, FT DEVENS
People.....: BUILDING 642, FT DEVENS
Equipment...: BUILDING 642, FT DEVENS
Misc. Sens..: BUILDING 642, FT DEVENS
Misc. Latent: BUILDING 642, FT DEVENS

INFILTRATION

Cooling.....: 0.00 CFM/sqft
Heating.....: 40.0 CFM
Typical.....: 20.0 CFM
When Fan On.? N

FLOOR

Type.....:Above Conditioned Space

WALL Exp	Gross Area (sqft)	WALL Type	WINDOW Type	WINDOW Qty	WINDOW Shade	WINDOW Type	WINDOW Qty	WINDOW Shade	Any Doors?
S	127.0	3	2	2	-	5	0	-	N

No roof or door data for this space.

No partition data for this space.

SPACE DESCRIPTION

Prepared by: NEW ENGLAND DIVISION 12-10-94

HAP v3.04 Page 1

****

GENERAL

Name.....: BLDG 644, STORAGE 203
Floor Area.....: 164.0 sqft
Building Weight.: 130.0 lb/sqft
Windows Shaded..? N
Partitions Used.? N

LIGHTING

Overhead Fixture: Recessed
Lamp Wattage....: 2.00 W/sqft
Ballast Mult....: 1.25
Task Lighting...: 0.00 W/sqft

PEOPLE

Occupancy.....: 0 People
Activity Level..: Office Work
Sensible.....: 245.0 BTU/hr
Latent.....: 205.0 BTU/hr

OTHER LOADS

Equipment.....: 0.00 W/sqft
Misc. Sensible..: 0.0 BTU/hr
Misc. Latent....: 0.0 BTU/hr

SCHEDULES

Lighting....: BUILDING 642, FT DEVENS
Task Lights.: BUILDING 642, FT DEVENS
People.....: BUILDING 642, FT DEVENS
Equipment...: BUILDING 642, FT DEVENS
Misc. Sens..: BUILDING 642, FT DEVENS
Misc. Latent: BUILDING 642, FT DEVENS

INFILTRATION

Cooling.....: 0.00 CFM/sqft
Heating.....: 40.0 CFM
Typical.....: 20.0 CFM
When Fan On.? N

FLOOR

Type.....:Above Conditioned Space

WALL Exp	Gross Area (sqft)	WALL Type	WINDOW Type	WINDOW Qty	WINDOW Shade	WINDOW Type	WINDOW Qty	WINDOW Shade	Any Doors?
W	140.0	3	2	0	-	5	0	-	N
S	130.0	3	2	2	-	5	0	-	N

No roof or door data for this space.

No partition data for this space.

SPACE DESCRIPTION

Prepared by: NEW ENGLAND DIVISION 12-10-94

HAP v3.04 Page 1

****

GENERAL

Name.....: BLDG 644, STORAGE 204
Floor Area.....: 380.3 sqft
Building Weight.: 130.0 lb/sqft
Windows Shaded..? N
Partitions Used.? N

LIGHTING

Overhead Fixture: Recessed
Lamp Wattage....: 2.00 W/sqft
Ballast Mult....: 1.25
Task Lighting...: 0.00 W/sqft

PEOPLE

Occupancy.....: 0 People
Activity Level..: Office Work
Sensible.....: 245.0 BTU/hr
Latent.....: 205.0 BTU/hr

OTHER LOADS

Equipment.....: 0.00 W/sqft
Misc. Sensible..: 0.0 BTU/hr
Misc. Latent....: 0.0 BTU/hr

SCHEDULES

Lighting....: BUILDING 642, FT DEVENS
Task Lights.: BUILDING 642, FT DEVENS
People.....: BUILDING 642, FT DEVENS
Equipment...: BUILDING 642, FT DEVENS
Misc. Sens..: BUILDING 642, FT DEVENS
Misc. Latent: BUILDING 642, FT DEVENS

INFILTRATION

Cooling.....: 0.00 CFM/sqft
Heating.....: 60.0 CFM
Typical.....: 30.0 CFM
When Fan On.? N

FLOOR

Type.....:Above Conditioned Space

WALL Exp	Gross Area (sqft)	WALL Type	WINDOW Type	WINDOW Qty	WINDOW Shade	WINDOW Type	WINDOW Qty	WINDOW Shade	Any Doors?
N	195.0	3	2	3	-	5	0	-	N
W	195.0	3	2	0	-	5	0	-	N

No roof or door data for this space.

No partition data for this space.

SPACE DESCRIPTION

Prepared by: NEW ENGLAND DIVISION 12-10-94

HAP v3.04 Page 1

****

GENERAL

Name.....: 644, 205, 206, 207 & 208

Floor Area.....: 358.0 sqft

Building Weight.: 130.0 lb/sqft

Windows Shaded..? N

Partitions Used.? N

LIGHTING

Overhead Fixture: Recessed

Lamp Wattage....: 2.00 W/sqft

Ballast Mult....: 1.25

Task Lighting...: 0.00 W/sqft

PEOPLE

Occupancy.....: 0 People

Activity Level..: Office Work

Sensible.....: 245.0 BTU/hr

Latent.....: 205.0 BTU/hr

OTHER LOADS

Equipment.....: 0.00 W/sqft

Misc. Sensible..: 0.0 BTU/hr

Misc. Latent....: 0.0 BTU/hr

SCHEDULES

Lighting....: BUILDING 642, FT DEVENS

Task Lights.: BUILDING 642, FT DEVENS

People.....: BUILDING 642, FT DEVENS

Equipment...: BUILDING 642, FT DEVENS

Misc. Sens..: BUILDING 642, FT DEVENS

Misc. Latent: BUILDING 642, FT DEVENS

INFILTRATION

Cooling.....: 0.00 CFM/sqft

Heating.....: 60.0 CFM

Typical.....: 30.0 CFM

When Fan On.? N

FLOOR

Type.....:Above Conditioned Space

WALL Exp	Gross Area (sqft)	WALL Type	WINDOW Type	WINDOW Qty	WINDOW Shade	WINDOW Type	WINDOW Qty	WINDOW Shade	Any Doors?
N	195.0	3	2	3	-	5	0	-	N

No roof or door data for this space.

No partition data for this space.

SPACE DESCRIPTION

Prepared by: NEW ENGLAND DIVISION 12-10-94

HAP v3.04 Page 1

****

GENERAL

Name.....: BLDG 644, STORAGE 209
Floor Area.....: 352.0 sqft
Building Weight.: 130.0 lb/sqft
Windows Shaded..? N
Partitions Used.? N

LIGHTING

Overhead Fixture: Recessed
Lamp Wattage....: 2.00 W/sqft
Ballast Mult....: 1.25
Task Lighting...: 0.00 W/sqft

PEOPLE

Occupancy.....: 0 People
Activity Level..: Office Work
Sensible.....: 245.0 BTU/hr
Latent.....: 205.0 BTU/hr

OTHER LOADS

Equipment.....: 0.00 W/sqft
Misc. Sensible..: 0.0 BTU/hr
Misc. Latent....: 0.0 BTU/hr

SCHEDULES

Lighting....: BUILDING 642, FT DEVENS
Task Lights.: BUILDING 642, FT DEVENS
People.....: BUILDING 642, FT DEVENS
Equipment...: BUILDING 642, FT DEVENS
Misc. Sens..: BUILDING 642, FT DEVENS
Misc. Latent: BUILDING 642, FT DEVENS

INFILTRATION

Cooling.....: 0.00 CFM/sqft
Heating.....: 60.0 CFM
Typical.....: 30.0 CFM
When Fan On.? N

FLOOR

Type.....:Above Conditioned Space

WALL Exp	Gross Area (sqft)	WALL Type	WINDOW Type	WINDOW Qty	WINDOW Shade	WINDOW Type	WINDOW Qty	WINDOW Shade	Any Doors?
E	195.0	3	2	0	-	5	0	-	N
N	195.0	3	2	3	-	5	0	-	N

No roof or door data for this space.

No partition data for this space.

20C

SPACE DESCRIPTION

Prepared by: NEW ENGLAND DIVISION 12-10-94

HAP v3.04 Page 1

****

GENERAL

Name.....: BLDG 644, STORAGE 210
Floor Area.....: 235.0 sqft
Building Weight.: 130.0 lb/sqft
Windows Shaded..? N
Partitions Used.? N

LIGHTING

Overhead Fixture: Recessed
Lamp Wattage....: 2.00 W/sqft
Ballast Mult....: 1.25
Task Lighting...: 0.00 W/sqft

PEOPLE

Occupancy.....: 0 People
Activity Level..: Office Work
Sensible.....: 245.0 BTU/hr
Latent.....: 205.0 BTU/hr

OTHER LOADS

Equipment.....: 0.00 W/sqft
Misc. Sensible..: 0.0 BTU/hr
Misc. Latent....: 0.0 BTU/hr

SCHEDULES

Lighting....: BUILDING 642, FT DEVENS
Task Lights.: BUILDING 642, FT DEVENS
People.....: BUILDING 642, FT DEVENS
Equipment...: BUILDING 642, FT DEVENS
Misc. Sens..: BUILDING 642, FT DEVENS
Misc. Latent: BUILDING 642, FT DEVENS

INFILTRATION

Cooling.....: 0.00 CFM/sqft
Heating.....: 40.0 CFM
Typical.....: 20.0 CFM
When Fan On.? N

FLOOR

Type.....:Above Conditioned Space

WALL Exp	Gross Area (sqft)	WALL Type	WINDOW Type	WINDOW Qty	WINDOW Shade	WINDOW Type	WINDOW Qty	WINDOW Shade	Any Doors?
S	130.0	3	2	2	-	5	0	-	N
E	140.0	3	2	0	-	5	0	-	N

No roof or door data for this space.

No partition data for this space.

SPACE DESCRIPTION

Prepared by: NEW ENGLAND DIVISION 12-10-94
HAP v3.04 Page 1

****

GENERAL
Name.....: BLDG 644, STOR 211 & 212
Floor Area.....: 173.0 sqft
Building Weight.: 130.0 lb/sqft
Windows Shaded..? N
Partitions Used.? N

LIGHTING
Overhead Fixture: Recessed
Lamp Wattage....: 2.00 W/sqft
Ballast Mult....: 1.25
Task Lighting...: 0.00 W/sqft

PEOPLE
Occupancy.....: 0 People
Activity Level..: Office Work
Sensible.....: 245.0 BTU/hr
Latent.....: 205.0 BTU/hr

OTHER LOADS
Equipment.....: 0.00 W/sqft
Misc. Sensible..: 0.0 BTU/hr
Misc. Latent....: 0.0 BTU/hr

SCHEDULES
Lighting....: BUILDING 642, FT DEVENS
Task Lights.: BUILDING 642, FT DEVENS
People.....: BUILDING 642, FT DEVENS
Equipment...: BUILDING 642, FT DEVENS
Misc. Sens..: BUILDING 642, FT DEVENS
Misc. Latent: BUILDING 642, FT DEVENS

INFILTRATION
Cooling.....: 0.00 CFM/sqft
Heating.....: 40.0 CFM
Typical.....: 20.0 CFM
When Fan On.? N

FLOOR
Type.....:Above Conditioned Space

WALL Exp	Gross Area (sqft)	WALL Type	WINDOW Type	WINDOW Qty	WINDOW Shade	WINDOW Type	WINDOW Qty	WINDOW Shade	Any Doors?
S	130.0	3	2	2	-	5	0	-	N

No roof or door data for this space.

No partition data for this space.

SPACE DESCRIPTION

Prepared by: NEW ENGLAND DIVISION 12-10-94

HAP v3.04 Page 1

****

GENERAL
- Name.....: BLDG 644, STORAGE 213
- Floor Area.....: 247.0 sqft
- Building Weight.: 130.0 lb/sqft
- Windows Shaded..? N
- Partitions Used.? N

LIGHTING
- Overhead Fixture: Recessed
- Lamp Wattage....: 2.00 W/sqft
- Ballast Mult....: 1.25
- Task Lighting...: 0.00 W/sqft

PEOPLE
- Occupancy.....: 0 People
- Activity Level..: Office Work
- Sensible.....: 245.0 BTU/hr
- Latent.....: 205.0 BTU/hr

OTHER LOADS
- Equipment.....: 0.00 W/sqft
- Misc. Sensible..: 0.0 BTU/hr
- Misc. Latent....: 0.0 BTU/hr

SCHEDULES
- Lighting....: BUILDING 642, FT DEVENS
- Task Lights.: BUILDING 642, FT DEVENS
- People.....: BUILDING 642, FT DEVENS
- Equipment...: BUILDING 642, FT DEVENS
- Misc. Sens..: BUILDING 642, FT DEVENS
- Misc. Latent: BUILDING 642, FT DEVENS

INFILTRATION
- Cooling.....: 0.00 CFM/sqft
- Heating.....: 20.0 CFM
- Typical.....: 10.0 CFM
- When Fan On.? N

FLOOR
- Type.....:Above Conditioned Space

WALL Exp	Gross Area (sqft)	WALL Type	WINDOW Type	WINDOW Qty	WINDOW Shade	WINDOW Type	WINDOW Qty	WINDOW Shade	Any Doors?
S	50.0	3	2	1	-	5	0	-	N

No roof or door data for this space.

No partition data for this space.

SPACE DESCRIPTION

Prepared by: NEW ENGLAND DIVISION 12-10-94

HAP v3.04 Page 1

****

GENERAL

Name.....: BLDG 644, REST 216 & 227
Floor Area.....: 624.0 sqft
Building Weight.: 130.0 lb/sqft
Windows Shaded..? N
Partitions Used.? N

LIGHTING

Overhead Fixture: Recessed
Lamp Wattage....: 2.00 W/sqft
Ballast Mult....: 1.25
Task Lighting...: 0.00 W/sqft

PEOPLE

Occupancy.....: 0 People
Activity Level..: Office Work
Sensible.....: 245.0 BTU/hr
Latent.....: 205.0 BTU/hr

OTHER LOADS

Equipment.....: 0.00 W/sqft
Misc. Sensible..: 0.0 BTU/hr
Misc. Latent....: 0.0 BTU/hr

SCHEDULES

Lighting....: BUILDING 642, FT DEVENS
Task Lights.: BUILDING 642, FT DEVENS
People.....: BUILDING 642, FT DEVENS
Equipment...: BUILDING 642, FT DEVENS
Misc. Sens..: BUILDING 642, FT DEVENS
Misc. Latent: BUILDING 642, FT DEVENS

INFILTRATION

Cooling.....: 0.00 CFM/sqft
Heating.....: 100.0 CFM
Typical.....: 50.0 CFM
When Fan On.? N

FLOOR

Type.....:Above Conditioned Space

WALL Exp	Gross Area (sqft)	WALL Type	WINDOW Type	WINDOW Qty	WINDOW Shade	WINDOW Type	WINDOW Qty	WINDOW Shade	Any Doors?
E	480.0	3	2	5	-	5	0	-	N

No roof or door data for this space.

No partition data for this space.

SPACE DESCRIPTION

Prepared by: NEW ENGLAND DIVISION 12-10-94

HAP v3.04 Page 1

****

GENERAL

Name.....: BLDG 644, STOR 218 & 225
Floor Area.....: 125.0 sqft
Building Weight.: 130.0 lb/sqft
Windows Shaded..? N
Partitions Used.? N

LIGHTING

Overhead Fixture: Recessed
Lamp Wattage....: 2.00 W/sqft
Ballast Mult....: 1.25
Task Lighting...: 0.00 W/sqft

PEOPLE

Occupancy.....: 0 People
Activity Level..: Office Work
Sensible.....: 245.0 BTU/hr
Latent.....: 205.0 BTU/hr

OTHER LOADS

Equipment.....: 0.00 W/sqft
Misc. Sensible..: 0.0 BTU/hr
Misc. Latent....: 0.0 BTU/hr

SCHEDULES

Lighting....: BUILDING 642, FT DEVENS
Task Lights.: BUILDING 642, FT DEVENS
People.....: BUILDING 642, FT DEVENS
Equipment...: BUILDING 642, FT DEVENS
Misc. Sens..: BUILDING 642, FT DEVENS
Misc. Latent: BUILDING 642, FT DEVENS

INFILTRATION

Cooling.....: 0.00 CFM/sqft
Heating.....: 20.0 CFM
Typical.....: 10.0 CFM
When Fan On.? N

FLOOR

Type.....:Above Conditioned Space

WALL Exp	Gross Area (sqft)	WALL Type	WINDOW Type	WINDOW Qty	WINDOW Shade	WINDOW Type	WINDOW Qty	WINDOW Shade	Any Doors?
E	110.0	3	2	1	-	5	0	-	N

No roof or door data for this space.

No partition data for this space.

SPACE DESCRIPTION

Prepared by: NEW ENGLAND DIVISION 12-10-94

HAP v3.04 Page 1

****

GENERAL

Name.....: BLDG 644 CLASS 219 & 220
Floor Area.....: 987.0 sqft
Building Weight.: 130.0 lb/sqft
Windows Shaded..? N
Partitions Used.? Y

LIGHTING

Overhead Fixture: Recessed
Lamp Wattage....: 2.00 W/sqft
Ballast Mult....: 1.25
Task Lighting...: 0.00 W/sqft

PEOPLE

Occupancy.....: 30 People
Activity Level..: Office Work
Sensible.....: 245.0 BTU/hr
Latent.....: 205.0 BTU/hr

OTHER LOADS

Equipment.....: 0.00 W/sqft
Misc. Sensible..: 0.0 BTU/hr
Misc. Latent....: 0.0 BTU/hr

SCHEDULES

Lighting....: BUILDING 642, FT DEVENS
Task Lights.: BUILDING 642, FT DEVENS
People.....: BUILDING 642, FT DEVENS
Equipment...: BUILDING 642, FT DEVENS
Misc. Sens..: BUILDING 642, FT DEVENS
Misc. Latent: BUILDING 642, FT DEVENS

INFILTRATION

Cooling.....: 0.00 CFM/sqft
Heating.....: 380.0 CFM
Typical.....: 190.0 CFM
When Fan On.? N

FLOOR

Type.....:Above Conditioned Space

WALL Exp	Gross Area (sqft)	WALL Type	WINDOW Type	WINDOW Qty	WINDOW Shade	WINDOW Type	WINDOW Qty	WINDOW Shade	Any Doors?
N	400.0	3	2	4	-	5	3	-	Y
E	80.0	3	2	0	-	5	1	-	N

ROOF Exp	Slope (deg)	Gross Area (sqft)	ROOF Type	SKYLIGHT Type	SKYLIGHT Qty
-	-	-	-	-	-
-	-	-	-	-	-
-	-	-	-	-	-
-	-	-	-	-	-

DOOR

Gross Area..: 20.1 sqft
Uvalue.....: 0.300
Glass Area..: 0.0 sqft
Glass U-val.: 0.500
Shade Coeff.: 1.00
Glass Shaded? N

PARTITION LOADS	Type 1	Type 2
Type.....	Partition	Ceiling
Area.....	110.0 sqft	0.0 sqft
U-value.....	1.000 BTU/hr/sqft/F	0.500 BTU/hr/sqft/F
Maximum Space Temp....:	90.0 F	75.0 F
Outside Air Temp @ Max:	85.0 F	55.0 F
Minimum Space Temp....:	50.0 F	75.0 F
Outside Air Temp @ Min:	0.0 F	54.0 F

SPACE DESCRIPTION

Prepared by: NEW ENGLAND DIVISION
HAP v3.04

12-10-94
Page 1

****

GENERAL
Name.....: BLDG 644, LIBRARY 222
Floor Area.....: 350.0 sqft
Building Weight.: 130.0 lb/sqft
Windows Shaded..? N
Partitions Used.? N

LIGHTING
Overhead Fixture: Recessed
Lamp Wattage....: 2.00 W/sqft
Ballast Mult....: 1.25
Task Lighting...: 0.00 W/sqft

PEOPLE
Occupancy.....: 4 People
Activity Level..: Office Work
Sensible.....: 245.0 BTU/hr
Latent.....: 205.0 BTU/hr

OTHER LOADS
Equipment.....: 0.00 W/sqft
Misc. Sensible..: 0.0 BTU/hr
Misc. Latent....: 0.0 BTU/hr

SCHEDULES
Lighting....: BUILDING 642, FT DEVENS
Task Lights.: BUILDING 642, FT DEVENS
People.....: BUILDING 642, FT DEVENS
Equipment...: BUILDING 642, FT DEVENS
Misc. Sens..: BUILDING 642, FT DEVENS
Misc. Latent: BUILDING 642, FT DEVENS

INFILTRATION
Cooling.....: 0.00 CFM/sqft
Heating.....: 160.0 CFM
Typical.....: 80.0 CFM
When Fan On.? N

FLOOR
Type.....:Above Conditioned Space

WALL Exp	Gross Area (sqft)	WALL Type	WINDOW Type	WINDOW Qty	WINDOW Shade	WINDOW Type	WINDOW Qty	WINDOW Shade	Any Doors?
S	250.0	3	2	4	-	5	4	-	N
E	140.0	3	2	2	-	5	1	-	Y

ROOF Exp	Slope (deg)	Gross Area (sqft)	ROOF Type	SKYLIGHT Type	SKYLIGHT Qty
-	-	-	-	-	-
-	-	-	-	-	-
-	-	-	-	-	-
-	-	-	-	-	-

DOOR
Gross Area..: 20.1 sqft
Uvalue.....: 0.300
Glass Area..: 0.0 sqft
Glass U-val.: 0.500
Shade Coeff.: 1.00
Glass Shaded? N

No partition data for this space.

SPACE DESCRIPTION

Prepared by: NEW ENGLAND DIVISION 12-10-94

HAP v3.04 Page 1

****

GENERAL

Name.....: BLDG 644, LEARNING 223
Floor Area.....: 280.0 sqft
Building Weight.: 130.0 lb/sqft
Windows Shaded..? N
Partitions Used.? N

LIGHTING

Overhead Fixture: Recessed
Lamp Wattage....: 2.00 W/sqft
Ballast Mult....: 1.25
Task Lighting...: 0.00 W/sqft

PEOPLE

Occupancy.....: 4 People
Activity Level..: Office Work
Sensible.....: 245.0 BTU/hr
Latent.....: 205.0 BTU/hr

OTHER LOADS

Equipment.....: 0.00 W/sqft
Misc. Sensible..: 0.0 BTU/hr
Misc. Latent....: 0.0 BTU/hr

SCHEDULES

Lighting....: BUILDING 642, FT DEVENS
Task Lights.: BUILDING 642, FT DEVENS
People.....: BUILDING 642, FT DEVENS
Equipment...: BUILDING 642, FT DEVENS
Misc. Sens..: BUILDING 642, FT DEVENS
Misc. Latent: BUILDING 642, FT DEVENS

INFILTRATION

Cooling.....: 0.00 CFM/sqft
Heating.....: 60.0 CFM
Typical.....: 30.0 CFM
When Fan On.? N

FLOOR

Type.....:Above Conditioned Space

WALL Exp	Gross Area (sqft)	WALL Type	WINDOW Type	WINDOW Qty	WINDOW Shade	WINDOW Type	WINDOW Qty	WINDOW Shade	Any Doors?
S	150.0	3	2	2	-	5	1	-	N

No roof or door data for this space.

No partition data for this space.

SPACE DESCRIPTION

Prepared by: NEW ENGLAND DIVISION 12-10-94

HAP v3.04 Page 1

****

GENERAL

Name.....: BLDG 644, OFFICE 231

Floor Area.....: 301.0 sqft

Building Weight.: 130.0 lb/sqft

Windows Shaded..? N

Partitions Used.? N

LIGHTING

Overhead Fixture: Recessed

Lamp Wattage....: 2.00 W/sqft

Ballast Mult....: 1.25

Task Lighting...: 0.00 W/sqft

PEOPLE

Occupancy.....: 4 People

Activity Level..: Office Work

Sensible.....: 245.0 BTU/hr

Latent.....: 205.0 BTU/hr

OTHER LOADS

Equipment.....: 0.00 W/sqft

Misc. Sensible..: 0.0 BTU/hr

Misc. Latent....: 0.0 BTU/hr

SCHEDULES

Lighting....: BUILDING 642, FT DEVENS

Task Lights.: BUILDING 642, FT DEVENS

People.....: BUILDING 642, FT DEVENS

Equipment...: BUILDING 642, FT DEVENS

Misc. Sens..: BUILDING 642, FT DEVENS

Misc. Latent: BUILDING 642, FT DEVENS

INFILTRATION

Cooling.....: 0.00 CFM/sqft

Heating.....: 60.0 CFM

Typical.....: 30.0 CFM

When Fan On.? N

FLOOR

Type.....:Above Conditioned Space

WALL Exp	Gross Area (sqft)	WALL Type	WINDOW Type	WINDOW Qty	WINDOW Shade	WINDOW Type	WINDOW Qty	WINDOW Shade	Any Doors?
N	215.0	3	2	3	-	5	0	-	N

No roof or door data for this space.

No partition data for this space.

SPACE DESCRIPTION

Prepared by: NEW ENGLAND DIVISION 12-10-94

HAP v3.04 Page 1

****

GENERAL

Name.....: BLDG 644, OFFICE 232
Floor Area.....: 301.0 sqft
Building Weight.: 130.0 lb/sqft
Windows Shaded..? N
Partitions Used.? N

LIGHTING

Overhead Fixture: Recessed
Lamp Wattage....: 2.00 W/sqft
Ballast Mult....: 1.25
Task Lighting...: 0.00 W/sqft

PEOPLE

Occupancy.....: 4 People
Activity Level..: Office Work
Sensible.....: 245.0 BTU/hr
Latent.....: 205.0 BTU/hr

OTHER LOADS

Equipment.....: 0.00 W/sqft
Misc. Sensible..: 0.0 BTU/hr
Misc. Latent....: 0.0 BTU/hr

SCHEDULES

Lighting....: BUILDING 642, FT DEVENS
Task Lights.: BUILDING 642, FT DEVENS
People.....: BUILDING 642, FT DEVENS
Equipment...: BUILDING 642, FT DEVENS
Misc. Sens..: BUILDING 642, FT DEVENS
Misc. Latent: BUILDING 642, FT DEVENS

INFILTRATION

Cooling.....: 0.00 CFM/sqft
Heating.....: 60.0 CFM
Typical.....: 30.0 CFM
When Fan On.? N

FLOOR

Type.....:Above Conditioned Space

WALL Exp	Gross Area (sqft)	WALL Type	WINDOW Type	WINDOW Qty	WINDOW Shade	WINDOW Type	WINDOW Qty	WINDOW Shade	Any Doors?
N	215.0	3	2	3	-	5	0	-	N
E	140.0	3	2	0	-	5	0	-	N

No roof or door data for this space.

No partition data for this space.

SPACE DESCRIPTION

Prepared by: NEW ENGLAND DIVISION 12-10-94

HAP v3.04 Page 1

****

GENERAL
- Name.....: BLDG 644, OFFICE 233
- Floor Area.....: 235.0 sqft
- Building Weight.: 130.0 lb/sqft
- Windows Shaded..? N
- Partitions Used.? N

LIGHTING
- Overhead Fixture: Recessed
- Lamp Wattage....: 2.00 W/sqft
- Ballast Mult....: 1.25
- Task Lighting...: 0.00 W/sqft

PEOPLE
- Occupancy.....: 3 People
- Activity Level..: Office Work
- Sensible.....: 245.0 BTU/hr
- Latent.....: 205.0 BTU/hr

OTHER LOADS
- Equipment.....: 0.00 W/sqft
- Misc. Sensible..: 0.0 BTU/hr
- Misc. Latent....: 0.0 BTU/hr

SCHEDULES
- Lighting....: BUILDING 642, FT DEVENS
- Task Lights.: BUILDING 642, FT DEVENS
- People.....: BUILDING 642, FT DEVENS
- Equipment...: BUILDING 642, FT DEVENS
- Misc. Sens..: BUILDING 642, FT DEVENS
- Misc. Latent: BUILDING 642, FT DEVENS

INFILTRATION
- Cooling.....: 0.00 CFM/sqft
- Heating.....: 40.0 CFM
- Typical.....: 20.0 CFM
- When Fan On.? N

FLOOR
- Type.....:Above Conditioned Space

WALL Exp	Gross Area (sqft)	WALL Type	WINDOW Type	WINDOW Qty	WINDOW Shade	WINDOW Type	WINDOW Qty	WINDOW Shade	Any Doors?
S	130.0	3	2	2	-	5	0	-	N
E	195.0	3	2	0	-	5	0	-	N

No roof or door data for this space.

No partition data for this space.

SPACE DESCRIPTION

Prepared by: NEW ENGLAND DIVISION 12-10-94

HAP v3.04 Page 1

****

GENERAL

Name.....: 644, 234, 236, 237 & 239
Floor Area.....: 218.0 sqft
Building Weight.: 130.0 lb/sqft
Windows Shaded..? N
Partitions Used.? N

LIGHTING

Overhead Fixture: Recessed
Lamp Wattage....: 2.00 W/sqft
Ballast Mult....: 1.25
Task Lighting...: 0.00 W/sqft

PEOPLE

Occupancy.....: 3 People
Activity Level..: Office Work
Sensible.....: 245.0 BTU/hr
Latent.....: 205.0 BTU/hr

OTHER LOADS

Equipment.....: 0.00 W/sqft
Misc. Sensible..: 0.0 BTU/hr
Misc. Latent....: 0.0 BTU/hr

SCHEDULES

Lighting....: BUILDING 642, FT DEVENS
Task Lights.: BUILDING 642, FT DEVENS
People.....: BUILDING 642, FT DEVENS
Equipment...: BUILDING 642, FT DEVENS
Misc. Sens..: BUILDING 642, FT DEVENS
Misc. Latent: BUILDING 642, FT DEVENS

INFILTRATION

Cooling.....: 0.00 CFM/sqft
Heating.....: 40.0 CFM
Typical.....: 20.0 CFM
When Fan On.? N

FLOOR

Type.....:Above Conditioned Space

WALL Exp	Gross Area (sqft)	WALL Type	WINDOW Type	WINDOW Qty	WINDOW Shade	WINDOW Type	WINDOW Qty	WINDOW Shade	Any Doors?
S	137.0	3	2	2	-	5	0	-	N

No roof or door data for this space.

No partition data for this space.

SPACE DESCRIPTION

Prepared by: NEW ENGLAND DIVISION 12-10-94

HAP v3.04 Page 1

****

GENERAL

Name.....: BLDG 644, OFFICE 235/238
Floor Area.....: 236.0 sqft
Building Weight.: 130.0 lb/sqft
Windows Shaded..? N
Partitions Used.? N

LIGHTING

Overhead Fixture: Recessed
Lamp Wattage....: 2.00 W/sqft
Ballast Mult....: 1.25
Task Lighting...: 0.00 W/sqft

PEOPLE

Occupancy.....: 3 People
Activity Level..: Office Work
Sensible.....: 245.0 BTU/hr
Latent.....: 205.0 BTU/hr

OTHER LOADS

Equipment.....: 0.00 W/sqft
Misc. Sensible..: 0.0 BTU/hr
Misc. Latent....: 0.0 BTU/hr

SCHEDULES

Lighting....: BUILDING 642, FT DEVENS
Task Lights.: BUILDING 642, FT DEVENS
People.....: BUILDING 642, FT DEVENS
Equipment...: BUILDING 642, FT DEVENS
Misc. Sens..: BUILDING 642, FT DEVENS
Misc. Latent: BUILDING 642, FT DEVENS

INFILTRATION

Cooling.....: 0.00 CFM/sqft
Heating.....: 60.0 CFM
Typical.....: 30.0 CFM
When Fan On.? N

FLOOR

Type.....:Above Conditioned Space

WALL Exp	Gross Area (sqft)	WALL Type	WINDOW Type	WINDOW Qty	WINDOW Shade	WINDOW Type	WINDOW Qty	WINDOW Shade	Any Doors?
S	175.0	3	2	3	-	5	0	-	N

No roof or door data for this space.

No partition data for this space.

SPACE DESCRIPTION

Prepared by: NEW ENGLAND DIVISION 12-10-94

HAP v3.04 Page 1

****

GENERAL

Name.....: BLDG 644, OFFICE 240

Floor Area.....: 235.0 sqft

Building Weight.: 130.0 lb/sqft

Windows Shaded..? N

Partitions Used.? N

LIGHTING

Overhead Fixture: Recessed

Lamp Wattage....: 2.00 W/sqft

Ballast Mult....: 1.25

Task Lighting...: 0.00 W/sqft

PEOPLE

Occupancy.....: 3 People

Activity Level..: Office Work

Sensible.....: 245.0 BTU/hr

Latent.....: 205.0 BTU/hr

OTHER LOADS

Equipment.....: 0.00 W/sqft

Misc. Sensible..: 0.0 BTU/hr

Misc. Latent....: 0.0 BTU/hr

SCHEDULES

Lighting....: BUILDING 642, FT DEVENS

Task Lights.: BUILDING 642, FT DEVENS

People.....: BUILDING 642, FT DEVENS

Equipment...: BUILDING 642, FT DEVENS

Misc. Sens..: BUILDING 642, FT DEVENS

Misc. Latent: BUILDING 642, FT DEVENS

INFILTRATION

Cooling.....: 0.00 CFM/sqft

Heating.....: 40.0 CFM

Typical.....: 20.0 CFM

When Fan On.? N

FLOOR

Type.....:Above.Conditioned Space

WALL Exp	Gross Area (sqft)	WALL Type	WINDOW Type	WINDOW Qty	WINDOW Shade	WINDOW Type	WINDOW Qty	WINDOW Shade	Any Doors?
S	138.0	3	2	2	-	5	0	-	N
W	195.0	3	2	0	-	5	0	-	N

No roof or door data for this space.

No partition data for this space.

SPACE DESCRIPTION

Prepared by: NEW ENGLAND DIVISION
HAP v3.04

12-10-94
Page 1

****

GENERAL
Name.....: BLDG 644, OFFICE 241
Floor Area.....: 301.0 sqft
Building Weight.: 130.0 lb/sqft
Windows Shaded..? N
Partitions Used.? N

LIGHTING
Overhead Fixture: Recessed
Lamp Wattage....: 2.00 W/sqft
Ballast Mult....: 1.25
Task Lighting...: 0.00 W/sqft

PEOPLE
Occupancy.....: 4 People
Activity Level..: Office Work
Sensible.....: 245.0 BTU/hr
Latent.....: 205.0 BTU/hr

OTHER LOADS
Equipment.....: 0.00 W/sqft
Misc. Sensible..: 0.0 BTU/hr
Misc. Latent....: 0.0 BTU/hr

SCHEDULES
Lighting....: BUILDING 642, FT DEVENS
Task Lights.: BUILDING 642, FT DEVENS
People.....: BUILDING 642, FT DEVENS
Equipment...: BUILDING 642, FT DEVENS
Misc. Sens..: BUILDING 642, FT DEVENS
Misc. Latent: BUILDING 642, FT DEVENS

INFILTRATION
Cooling.....: 0.00 CFM/sqft
Heating.....: 60.0 CFM
Typical.....: 30.0 CFM
When Fan On.? N

FLOOR
Type.....:Above Conditioned Space

WALL Exp	Gross Area (sqft)	WALL Type	WINDOW Type	WINDOW Qty	WINDOW Shade	WINDOW Type	WINDOW Qty	WINDOW Shade	Any Doors?
N	215.0	3	2	3	-	5	0	-	N
W	140.0	3	2	0	-	5	0	-	N

No roof or door data for this space.

No partition data for this space.

SPACE DESCRIPTION

Prepared by: NEW ENGLAND DIVISION 12-10-94

HAP v3.04 Page 1

****

GENERAL

Name.....: BLDG 644, OFFICE 242

Floor Area.....: 245.0 sqft

Building Weight.: 130.0 lb/sqft

Windows Shaded..? N

Partitions Used.? N

LIGHTING

Overhead Fixture: Recessed

Lamp Wattage....: 2.00 W/sqft

Ballast Mult....: 1.25

Task Lighting...: 0.00 W/sqft

PEOPLE

Occupancy.....: 3 People

Activity Level..: Office Work

Sensible.....: 245.0 BTU/hr

Latent.....: 205.0 BTU/hr

OTHER LOADS

Equipment.....: 0.00 W/sqft

Misc. Sensible..: 0.0 BTU/hr

Misc. Latent....: 0.0 BTU/hr

SCHEDULES

Lighting....: BUILDING 642, FT DEVENS

Task Lights.: BUILDING 642, FT DEVENS

People.....: BUILDING 642, FT DEVENS

Equipment...: BUILDING 642, FT DEVENS

Misc. Sens..: BUILDING 642, FT DEVENS

Misc. Latent: BUILDING 642, FT DEVENS

INFILTRATION

Cooling.....: 0.00 CFM/sqft

Heating.....: 60.0 CFM

Typical.....: 30.0 CFM

When Fan On.? N

FLOOR

Type.....:Above Conditioned Space

WALL Exp	Gross Area (sqft)	WALL Type	WINDOW Type	WINDOW Qty	WINDOW Shade	WINDOW Type	WINDOW Qty	WINDOW Shade	Any Doors?
N	175.0	3	2	3	-	5	0	-	N

No roof or door data for this space.

No partition data for this space.

SPACE DESCRIPTION

Prepared by: NEW ENGLAND DIVISION 12-10-94

HAP v3.04 Page 1

****

GENERAL
- Name.....: BLDG 644, MAIL 244
- Floor Area.....: 168.0 sqft
- Building Weight.: 130.0 lb/sqft
- Windows Shaded..? N
- Partitions Used.? N

LIGHTING
- Overhead Fixture: Recessed
- Lamp Wattage....: 2.00 W/sqft
- Ballast Mult....: 1.25
- Task Lighting...: 0.00 W/sqft

PEOPLE
- Occupancy.....: 2 People
- Activity Level..: Office Work
- Sensible.....: 245.0 BTU/hr
- Latent.....: 205.0 BTU/hr

OTHER LOADS
- Equipment.....: 0.00 W/sqft
- Misc. Sensible..: 0.0 BTU/hr
- Misc. Latent....: 0.0 BTU/hr

SCHEDULES
- Lighting....: BUILDING 642, FT DEVENS
- Task Lights.: BUILDING 642, FT DEVENS
- People.....: BUILDING 642, FT DEVENS
- Equipment...: BUILDING 642, FT DEVENS
- Misc. Sens..: BUILDING 642, FT DEVENS
- Misc. Latent: BUILDING 642, FT DEVENS

INFILTRATION
- Cooling.....: 0.00 CFM/sqft
- Heating.....: 20.0 CFM
- Typical.....: 10.0 CFM
- When Fan On.? N

FLOOR
- Type.....:Above Conditioned Space

WALL Exp	Gross Area (sqft)	WALL Type	WINDOW Type	WINDOW Qty	WINDOW Shade	WINDOW Type	WINDOW Qty	WINDOW Shade	Any Doors?
W	120.0	3	2	0	-	5	1	-	N

No roof or door data for this space.

No partition data for this space.

SPACE DESCRIPTION

Prepared by: NEW ENGLAND DIVISION 12-10-94

HAP v3.04 Page 1

****

GENERAL

Name.....: BLDG 644, COPIER FAX 245
Floor Area.....: 165.2 sqft
Building Weight.: 130.0 lb/sqft
Windows Shaded..? N
Partitions Used.? N

LIGHTING

Overhead Fixture: Recessed
Lamp Wattage....: 2.00 W/sqft
Ballast Mult....: 1.25
Task Lighting...: 0.00 W/sqft

PEOPLE

Occupancy.....: 2 People
Activity Level..: Qffice Work
Sensible.....: 245.0 BTU/hr
Latent.....: 205.0 BTU/hr

OTHER LOADS

Equipment.....: 0.00 W/sqft
Misc. Sensible..: 0.0 BTU/hr
Misc. Latent....: 0.0 BTU/hr

SCHEDULES

Lighting....: BUILDING 642, FT DEVENS
Task Lights.: BUILDING 642, FT DEVENS
People.....: BUILDING 642, FT DEVENS
Equipment...: BUILDING 642, FT DEVENS
Misc. Sens..: BUILDING 642, FT DEVENS
Misc. Latent: BUILDING 642, FT DEVENS

INFILTRATION

Cooling.....: 0.00 CFM/sqft
Heating.....: 40.0 CFM
Typical.....: 20.0 CFM
When Fan On.? N

FLOOR

Type.....:Above Conditioned Space

WALL Exp	Gross Area (sqft)	WALL Type	WINDOW Type	WINDOW Qty	WINDOW Shade	WINDOW Type	WINDOW Qty	WINDOW Shade	Any Doors?
W	118.0	3	2	2	-	5	0	-	N

No roof or door data for this space.

No partition data for this space.

SPACE DESCRIPTION

Prepared by: NEW ENGLAND DIVISION
HAP v3.04

12-10-94
Page 1

****

GENERAL
Name.....: BLDG 644 ROOMS 246 & 249
Floor Area.....: 361.2 sqft
Building Weight.: 130.0 lb/sqft
Windows Shaded..? N
Partitions Used.? N

LIGHTING
Overhead Fixture: Recessed
Lamp Wattage....: 2.00 W/sqft
Ballast Mult....: 1.25
Task Lighting...: 0.00 W/sqft

PEOPLE
Occupancy.....: 10 People
Activity Level..: Office Work
Sensible.....: 245.0 BTU/hr
Latent.....: 205.0 BTU/hr

OTHER LOADS
Equipment.....: 0.00 W/sqft
Misc. Sensible..: 0.0 BTU/hr
Misc. Latent....: 0.0 BTU/hr

SCHEDULES
Lighting....: BUILDING 642, FT DEVENS
Task Lights.: BUILDING 642, FT DEVENS
People.....: BUILDING 642, FT DEVENS
Equipment...: BUILDING 642, FT DEVENS
Misc. Sens..: BUILDING 642, FT DEVENS
Misc. Latent: BUILDING 642, FT DEVENS

INFILTRATION
Cooling.....: 0.00 CFM/sqft
Heating.....: 80.0 CFM
Typical.....: 40.0 CFM
When Fan On.? N

FLOOR
Type.....:Above Conditioned Space

WALL Exp	Gross Area (sqft)	WALL Type	WINDOW Type	WINDOW Qty	WINDOW Shade	WINDOW Type	WINDOW Qty	WINDOW Shade	Any Doors?
W	258.0	3	2	4	-	5	0	-	N

No roof or door data for this space.

No partition data for this space.

SPACE DESCRIPTION

Prepared by: NEW ENGLAND DIVISION 12-10-94

HAP v3.04 Page 1

****

GENERAL

Name.....: BLDG 644 CLASS 247 & 248
Floor Area.....: 266.0 sqft
Building Weight.: 130.0 lb/sqft
Windows Shaded..? N
Partitions Used.? N

LIGHTING

Overhead Fixture: Recessed
Lamp Wattage....: 2.00 W/sqft
Ballast Mult....: 1.25
Task Lighting...: 0.00 W/sqft

PEOPLE

Occupancy.....: 8 People
Activity Level..: Office Work
Sensible.....: 245.0 BTU/hr
Latent.....: 205.0 BTU/hr

OTHER LOADS

Equipment.....: 0.00 W/sqft
Misc. Sensible..: 0.0 BTU/hr
Misc. Latent....: 0.0 BTU/hr

SCHEDULES

Lighting....: BUILDING 642, FT DEVENS
Task Lights.: BUILDING 642, FT DEVENS
People.....: BUILDING 642, FT DEVENS
Equipment...: BUILDING 642, FT DEVENS
Misc. Sens..: BUILDING 642, FT DEVENS
Misc. Latent: BUILDING 642, FT DEVENS

INFILTRATION

Cooling.....: 0.00 CFM/sqft
Heating.....: 60.0 CFM
Typical.....: 30.0 CFM
When Fan On.? N

FLOOR

Type.....:Above Conditioned Space

WALL Exp	Gross Area (sqft)	WALL Type	WINDOW Type	WINDOW Qty	WINDOW Shade	WINDOW Type	WINDOW Qty	WINDOW Shade	Any Doors?
W	190.0	3	2	3	-	5	0	-	N

No roof or door data for this space.

No partition data for this space.

SPACE DESCRIPTION

Prepared by: NEW ENGLAND DIVISION 12-10-94

HAP v3.04 Page 1

****

GENERAL

Name.....: BLDG 644, COMSEC TR 250
Floor Area.....: 273.0 sqft
Building Weight.: 130.0 lb/sqft
Windows Shaded..? N
Partitions Used.? N

LIGHTING

Overhead Fixture: Recessed
Lamp Wattage....: 2.00 W/sqft
Ballast Mult....: 1.25
Task Lighting...: 0.00 W/sqft

PEOPLE

Occupancy.....: 4 People
Activity Level..: Office Work
Sensible.....: 245.0 BTU/hr
Latent.....: 205.0 BTU/hr

OTHER LOADS

Equipment.....: 0.00 W/sqft
Misc. Sensible..: 0.0 BTU/hr
Misc. Latent....: 0.0 BTU/hr

SCHEDULES

Lighting....: BUILDING 642, FT DEVENS
Task Lights.: BUILDING 642, FT DEVENS
People.....: BUILDING 642, FT DEVENS
Equipment...: BUILDING 642, FT DEVENS
Misc. Sens..: BUILDING 642, FT DEVENS
Misc. Latent: BUILDING 642, FT DEVENS

INFILTRATION

Cooling.....: 0.00 CFM/sqft
Heating.....: 60.0 CFM
Typical.....: 30.0 CFM
When Fan On.? N

FLOOR

Type.....:Above Conditioned Space

WALL Exp	Gross Area (sqft)	WALL Type	WINDOW Type	WINDOW Qty	WINDOW Shade	WINDOW Type	WINDOW Qty	WINDOW Shade	Any Doors?
W	195.0	3	2	2	-	5	1	-	N

No roof or door data for this space.

No partition data for this space.

SPACE DESCRIPTION

Prepared by: NEW ENGLAND DIVISION 12-10-94

HAP v3.04 Page 1

****

GENERAL

Name.....: BLDG 644, TELEPHONE 251

Floor Area.....: 63.0 sqft

Building Weight.: 130.0 lb/sqft

Windows Shaded..? N

Partitions Used.? N

LIGHTING

Overhead Fixture: Recessed

Lamp Wattage....: 2.00 W/sqft

Ballast Mult....: 1.25

Task Lighting...: 0.00 W/sqft

PEOPLE

Occupancy.....: 0 People

Activity Level..: Office Work

Sensible.....: 245.0 BTU/hr

Latent.....: 205.0 BTU/hr

OTHER LOADS

Equipment.....: 0.00 W/sqft

Misc. Sensible..: 0.0 BTU/hr

Misc. Latent....: 0.0 BTU/hr

SCHEDULES

Lighting....: BUILDING 642, FT DEVENS

Task Lights.: BUILDING 642, FT DEVENS

People.....: BUILDING 642, FT DEVENS

Equipment...: BUILDING 642, FT DEVENS

Misc. Sens..: BUILDING 642, FT DEVENS

Misc. Latent: BUILDING 642, FT DEVENS

INFILTRATION

Cooling.....: 0.00 CFM/sqft

Heating.....: 0.0 CFM

Typical.....: 0.0 CFM

When Fan On.? N

FLOOR

Type.....:Above Conditioned Space

WALL Exp	Gross Area (sqft)	WALL Type	WINDOW Type	WINDOW Qty	WINDOW Shade	WINDOW Type	WINDOW Qty	WINDOW Shade	Any Doors?
W	45.0	3	2	0	-	5	0	-	N

No roof or door data for this space.

No partition data for this space.

SPACE DESCRIPTION

Prepared by: NEW ENGLAND DIVISION
HAP v3.04

12-10-94
Page 1

****

GENERAL
Name.....: BLDG 644, C21 & C26
Floor Area.....: 292.5 sqft
Building Weight.: 130.0 lb/sqft
Windows Shaded..? N
Partitions Used.? N

LIGHTING
Overhead Fixture: Recessed
Lamp Wattage....: 2.00 W/sqft
Ballast Mult....: 1.25
Task Lighting...: 0.00 W/sqft

PEOPLE
Occupancy.....: 0 People
Activity Level..: Office Work
Sensible.....: 245.0 BTU/hr
Latent.....: 205.0 BTU/hr

OTHER LOADS
Equipment.....: 0.00 W/sqft
Misc. Sensible..: 0.0 BTU/hr
Misc. Latent....: 0.0 BTU/hr

SCHEDULES
Lighting....: BUILDING 642, FT DEVENS
Task Lights.: BUILDING 642, FT DEVENS
People.....: BUILDING 642, FT DEVENS
Equipment...: BUILDING 642, FT DEVENS
Misc. Sens..: BUILDING 642, FT DEVENS
Misc. Latent: BUILDING 642, FT DEVENS

INFILTRATION
Cooling.....: 0.00 CFM/sqft
Heating.....: 40.0 CFM
Typical.....: 20.0 CFM
When Fan On.? N

FLOOR
Type.....:Above Conditioned Space

WALL Exp	Gross Area (sqft)	WALL Type	WINDOW Type	WINDOW Qty	WINDOW Shade	WINDOW Type	WINDOW Qty	WINDOW Shade	Any Doors?
W	50.0	3	1	0	-	1	0	-	Y

ROOF Exp	Slope (deg)	Gross Area (sqft)	ROOF Type	SKYLIGHT Type	SKYLIGHT Qty
-	-	-	-	-	-
-	-	-	-	-	-
-	-	-	-	-	-
-	-	-	-	-	-

DOOR
Gross Area..: 20.0 sqft
Uvalue.....: 0.300
Glass Area..: 0.0 sqft
Glass U-val.: 0.500
Shade Coeff.: 1.00
Glass Shaded? N

No partition data for this space.

SPACE DESCRIPTION

Prepared by: NEW ENGLAND DIVISION 12-10-94

HAP v3.04 Page 1

****

GENERAL

Name.....: BLDG 644, C22 & C27

Floor Area.....: 292.5 sqft

Building Weight.: 130.0 lb/sqft

Windows Shaded..? N

Partitions Used.? N

LIGHTING

Overhead Fixture: Recessed

Lamp Wattage....: 2.00 W/sqft

Ballast Mult....: 1.25

Task Lighting...: 0.00 W/sqft

PEOPLE

Occupancy.....: 0 People

Activity Level..: Office Work

Sensible.....: 245.0 BTU/hr

Latent.....: 205.0 BTU/hr

OTHER LOADS

Equipment.....: 0.00 W/sqft

Misc. Sensible..: 0.0 BTU/hr

Misc. Latent....: 0.0 BTU/hr

SCHEDULES

Lighting....: BUILDING 642, FT DEVENS

Task Lights.: BUILDING 642, FT DEVENS

People.....: BUILDING 642, FT DEVENS

Equipment...: BUILDING 642, FT DEVENS

Misc. Sens..: BUILDING 642, FT DEVENS

Misc. Latent: BUILDING 642, FT DEVENS

INFILTRATION

Cooling.....: 0.00 CFM/sqft

Heating.....: 40.0 CFM

Typical.....: 20.0 CFM

When Fan On.? N

FLOOR

Type.....:Above Conditioned Space

WALL Exp	Gross Area (sqft)	WALL Type	WINDOW Type	WINDOW Qty	WINDOW Shade	WINDOW Type	WINDOW Qty	WINDOW Shade	Any Doors?
E	50.0	3	1	0	-	1	0	-	Y

ROOF Exp	Slope (deg)	Gross Area (sqft)	ROOF Type	SKYLIGHT Type	SKYLIGHT Qty
-	-	-	-	-	-
-	-	-	-	-	-
-	-	-	-	-	-
-	-	-	-	-	-

DOOR

Gross Area..: 20.0 sqft

Uvalue.....: 0.300

Glass Area..: 0.0 sqft

Glass U-val.: 0.500

Shade Coeff.: 1.00

Glass Shaded? N

No partition data for this space.

SPACE DESCRIPTION

Prepared by: NEW ENGLAND DIVISION 12-10-94

HAP v3.04 Page 1

****

GENERAL

Name.....: BLDG 644, C23 & C25

Floor Area.....: 465.0 sqft

Building Weight.: 130.0 lb/sqft

Windows Shaded..? N

Partitions Used.? N

LIGHTING

Overhead Fixture: Recessed

Lamp Wattage....: 2.00 W/sqft

Ballast Mult....: 1.25

Task Lighting...: 0.00 W/sqft

PEOPLE

Occupancy.....: 0 People

Activity Level..: Office Work

Sensible.....: 245.0 BTU/hr

Latent.....: 205.0 BTU/hr

OTHER LOADS

Equipment.....: 0.00 W/sqft

Misc. Sensible..: 0.0 BTU/hr

Misc. Latent....: 0.0 BTU/hr

SCHEDULES

Lighting....: BUILDING 642, FT DEVENS

Task Lights.: BUILDING 642, FT DEVENS

People.....: BUILDING 642, FT DEVENS

Equipment...: BUILDING 642, FT DEVENS

Misc. Sens..: BUILDING 642, FT DEVENS

Misc. Latent: BUILDING 642, FT DEVENS

INFILTRATION

Cooling.....: 0.00 CFM/sqft

Heating.....: 0.0 CFM

Typical.....: 0.0 CFM

When Fan On.? N

FLOOR

Type.....:Above Conditioned Space

==========

No external wall or window data for this space.

==========

No roof or door data for this space.

==========

No partition data for this space.

==========

SPACE DESCRIPTION

Prepared by: NEW ENGLAND DIVISION 12-10-94

HAP v3.04 Page 1

****

GENERAL

Name.....: BLDG 644, STAIRS S21/S22
Floor Area.....: 126.0 sqft
Building Weight.: 130.0 lb/sqft
Windows Shaded..? N
Partitions Used.? N

LIGHTING

Overhead Fixture: Recessed
Lamp Wattage....: 2.00 W/sqft
Ballast Mult....: 1.25
Task Lighting...: 0.00 W/sqft

PEOPLE

Occupancy.....: 0 People
Activity Level..: Office Work
Sensible.....: 245.0 BTU/hr
Latent.....: 205.0 BTU/hr

OTHER LOADS

Equipment.....: 0.00 W/sqft
Misc. Sensible..: 0.0 BTU/hr
Misc. Latent....: 0.0 BTU/hr

SCHEDULES

Lighting....: BUILDING 642, FT DEVENS
Task Lights.: BUILDING 642, FT DEVENS
People.....: BUILDING 642, FT DEVENS
Equipment...: BUILDING 642, FT DEVENS
Misc. Sens..: BUILDING 642, FT DEVENS
Misc. Latent: BUILDING 642, FT DEVENS

INFILTRATION

Cooling.....: 0.00 CFM/sqft
Heating.....: 20.0 CFM
Typical.....: 10.0 CFM
When Fan On.? N

FLOOR

Type.....:Above Conditioned Space

WALL Exp	Gross Area (sqft)	WALL Type	WINDOW Type	WINDOW Qty	WINDOW Shade	WINDOW Type	WINDOW Qty	WINDOW Shade	Any Doors?
W	90.0	3	3	1	-	4	0	-	N

No roof or door data for this space.

No partition data for this space.

SPACE DESCRIPTION

Prepared by: NEW ENGLAND DIVISION 12-10-94

HAP v3.04 Page 1

****

GENERAL

Name.....: BLDG 644, OFFICE 301/302
Floor Area.....: 164.0 sqft
Building Weight.: 130.0 lb/sqft
Windows Shaded..? N
Partitions Used.? N

LIGHTING

Overhead Fixture: Recessed
Lamp Wattage....: 2.00 W/sqft
Ballast Mult....: 1.25
Task Lighting...: 0.00 W/sqft

PEOPLE

Occupancy.....: 2 People
Activity Level..: Office Work
Sensible.....: 245.0 BTU/hr
Latent.....: 205.0 BTU/hr

OTHER LOADS

Equipment.....: 0.00 W/sqft
Misc. Sensible..: 0.0 BTU/hr
Misc. Latent....: 0.0 BTU/hr

SCHEDULES

Lighting....: BUILDING 642, FT DEVENS
Task Lights.: BUILDING 642, FT DEVENS
People.....: BUILDING 642, FT DEVENS
Equipment...: BUILDING 642, FT DEVENS
Misc. Sens..: BUILDING 642, FT DEVENS
Misc. Latent: BUILDING 642, FT DEVENS

INFILTRATION

Cooling.....: 0.00 CFM/sqft
Heating.....: 40.0 CFM
Typical.....: 20.0 CFM
When Fan On.? N

FLOOR

Type.....:Above Conditioned Space

WALL Exp	Gross Area (sqft)	WALL Type	WINDOW Type	WINDOW Qty	WINDOW Shade	WINDOW Type	WINDOW Qty	WINDOW Shade	Any Doors?
S	127.0	3	2	2	-	5	0	-	N

ROOF Exp	Slope (deg)	Gross Area (sqft)	ROOF Type	SKYLIGHT Type	SKYLIGHT Qty
HOR	-	166.0	2	1	0

No partition data for this space.

SPACE DESCRIPTION

Prepared by: NEW ENGLAND DIVISION 12-10-94

HAP v3.04 Page 1

****

GENERAL

Name.....: BLDG 644, OFFICE 303
Floor Area.....: 164.0 sqft
Building Weight.: 130.0 lb/sqft
Windows Shaded..? N
Partitions Used.? N

LIGHTING

Overhead Fixture: Recessed
Lamp Wattage....: 2.00 W/sqft
Ballast Mult....: 1.25
Task Lighting...: 0.00 W/sqft

PEOPLE

Occupancy.....: 2 People
Activity Level..: Office Work .
Sensible.....: 245.0 BTU/hr
Latent.....: 205.0 BTU/hr

OTHER LOADS

Equipment.....: 0.00 W/sqft
Misc. Sensible..: 0.0 BTU/hr
Misc. Latent....: 0.0 BTU/hr

SCHEDULES

Lighting....: BUILDING 642, FT DEVENS
Task Lights.: BUILDING 642, FT DEVENS
People.....: BUILDING 642, FT DEVENS
Equipment...: BUILDING 642, FT DEVENS
Misc. Sens..: BUILDING 642, FT DEVENS
Misc. Latent: BUILDING 642, FT DEVENS

INFILTRATION

Cooling.....: 0.00 CFM/sqft
Heating.....: 40.0 CFM
Typical.....: 20.0 CFM
When Fan On.? N

FLOOR

Type.....:Above Conditioned Space

WALL Exp	Gross Area (sqft)	WALL Type	WINDOW Type	WINDOW Qty	WINDOW Shade	WINDOW Type	WINDOW Qty	WINDOW Shade	Any Doors?
W	140.0	3	2	0	-	5	0	-	N
S	130.0	3	2	2	-	5	0	-	N

ROOF Exp	Slope (deg)	Gross Area (sqft)	ROOF Type	SKYLIGHT Type	SKYLIGHT Qty
HOR	-	182.0	2	1	0

No partition data for this space.

SPACE DESCRIPTION

Prepared by: NEW ENGLAND DIVISION
HAP v3.04

12-10-94
Page 1

****

GENERAL
Name.....: BLDG 644, OFFICE 304
Floor Area.....: 380.3 sqft
Building Weight.: 130.0 lb/sqft
Windows Shaded..? N
Partitions Used.? N

LIGHTING
Overhead Fixture: Recessed
Lamp Wattage....: 2.00 W/sqft
Ballast Mult....: 1.25
Task Lighting...: 0.00 W/sqft

PEOPLE
Occupancy.....: 4 People
Activity Level..: Office Work
Sensible.....: 245.0 BTU/hr
Latent.....: 205.0 BTU/hr

OTHER LOADS
Equipment.....: 0.00 W/sqft
Misc. Sensible..: 0.0 BTU/hr
Misc. Latent....: 0.0 BTU/hr

SCHEDULES
Lighting....: BUILDING 642, FT DEVENS
Task Lights.: BUILDING 642, FT DEVENS
People.....: BUILDING 642, FT DEVENS
Equipment...: BUILDING 642, FT DEVENS
Misc. Sens..: BUILDING 642, FT DEVENS
Misc. Latent: BUILDING 642, FT DEVENS

INFILTRATION
Cooling.....: 0.00 CFM/sqft
Heating.....: 60.0 CFM
Typical.....: 30.0 CFM
When Fan On.? N

FLOOR
Type.....:Above Conditioned Space

WALL Exp	Gross Area (sqft)	WALL Type	WINDOW Type	WINDOW Qty	WINDOW Shade	WINDOW Type	WINDOW Qty	WINDOW Shade	Any Doors?
N	195.0	3	2	3	-	5	0	-	N
W	195.0	3	2	0	-	5	0	-	N

ROOF Exp	Slope (deg)	Gross Area (sqft)	ROOF Type	SKYLIGHT Type	SKYLIGHT Qty
HOR	-	380.3	2	1	0

No partition data for this space.

SPACE DESCRIPTION

Prepared by: NEW ENGLAND DIVISION 12-10-94

HAP v3.04 Page 1

****

GENERAL

Name.....: 644, 305, 306, 307 & 308
Floor Area.....: 380.3 sqft
Building Weight.: 130.0 lb/sqft
Windows Shaded..? N
Partitions Used.? N

LIGHTING

Overhead Fixture: Recessed
Lamp Wattage....: 2.00 W/sqft
Ballast Mult....: 1.25
Task Lighting...: 0.00 W/sqft

PEOPLE

Occupancy.....: 4 People
Activity Level..: Office Work
Sensible.....: 245.0 BTU/hr
Latent.....: 205.0 BTU/hr

OTHER LOADS

Equipment.....: 0.00 W/sqft
Misc. Sensible..: 0.0 BTU/hr
Misc. Latent....: 0.0 BTU/hr

SCHEDULES

Lighting....: BUILDING 642, FT DEVENS
Task Lights.: BUILDING 642, FT DEVENS
People.....: BUILDING 642, FT DEVENS
Equipment...: BUILDING 642, FT DEVENS
Misc. Sens..: BUILDING 642, FT DEVENS
Misc. Latent: BUILDING 642, FT DEVENS

INFILTRATION

Cooling.....: 0.00 CFM/sqft
Heating.....: 60.0 CFM
Typical.....: 30.0 CFM
When Fan On.? N

FLOOR

Type.....:Above Conditioned Space

WALL Exp	Gross Area (sqft)	WALL Type	WINDOW Type	WINDOW Qty	WINDOW Shade	WINDOW Type	WINDOW Qty	WINDOW Shade	Any Doors?
N	195.0	3	2	3	-	5	0	-	N

ROOF Exp	Slope (deg)	Gross Area (sqft)	ROOF Type	SKYLIGHT Type	SKYLIGHT Qty
HOR	-	380.3	2	1	0

No partition data for this space.

SPACE DESCRIPTION

Prepared by: NEW ENGLAND DIVISION 12-10-94

HAP v3.04 Page 1

****

GENERAL

Name.....: BLDG 644, OFFICE 309
Floor Area.....: 380.3 sqft
Building Weight.: 130.0 lb/sqft
Windows Shaded..? N
Partitions Used.? N

LIGHTING

Overhead Fixture: Recessed
Lamp Wattage....: 2.00 W/sqft
Ballast Mult....: 1.25
Task Lighting...: 0.00 W/sqft

PEOPLE

Occupancy.....: 4 People
Activity Level..: Office Work
Sensible.....: 245.0 BTU/hr
Latent.....: 205.0 BTU/hr

OTHER LOADS

Equipment.....: 0.00 W/sqft
Misc. Sensible..: 0.0 BTU/hr
Misc. Latent....: 0.0 BTU/hr

SCHEDULES

Lighting....: BUILDING 642, FT DEVENS
Task Lights.: BUILDING 642, FT DEVENS
People.....: BUILDING 642, FT DEVENS
Equipment...: BUILDING 642, FT DEVENS
Misc. Sens..: BUILDING 642, FT DEVENS
Misc. Latent: BUILDING 642, FT DEVENS

INFILTRATION

Cooling.....: 0.00 CFM/sqft
Heating.....: 60.0 CFM
Typical.....: 30.0 CFM
When Fan On.? N

FLOOR

Type.....:Above Conditioned Space

WALL Exp	Gross Area (sqft)	WALL Type	WINDOW Type	WINDOW Qty	WINDOW Shade	WINDOW Type	WINDOW Qty	WINDOW Shade	Any Doors?
E	195.0	3	2	0	-	5	0	-	N
N	195.0	3	2	3	-	5	0	-	N

ROOF Exp	Slope (deg)	Gross Area (sqft)	ROOF Type	SKYLIGHT Type	SKYLIGHT Qty
HOR	-	380.3	2	1	0

No partition data for this space.

SPACE DESCRIPTION

Prepared by: NEW ENGLAND DIVISION 12-10-94

HAP v3.04 Page 1

****

GENERAL

Name.....: BLDG 644, OFFICE 310
Floor Area.....: 182.0 sqft
Building Weight.: 130.0 lb/sqft
Windows Shaded..? N
Partitions Used.? N

LIGHTING

Overhead Fixture: Recessed
Lamp Wattage....: 2.00 W/sqft
Ballast Mult....: 1.25
Task Lighting...: 0.00 W/sqft

PEOPLE

Occupancy.....: 3 People
Activity Level..: Office Work
Sensible.....: 245.0 BTU/hr
Latent.....: 205.0 BTU/hr

OTHER LOADS

Equipment.....: 0.00 W/sqft
Misc. Sensible..: 0.0 BTU/hr
Misc. Latent....: 0.0 BTU/hr

SCHEDULES

Lighting....: BUILDING 642, FT DEVENS
Task Lights.: BUILDING 642, FT DEVENS
People.....: BUILDING 642, FT DEVENS
Equipment...: BUILDING 642, FT DEVENS
Misc. Sens..: BUILDING 642, FT DEVENS
Misc. Latent: BUILDING 642, FT DEVENS

INFILTRATION

Cooling.....: 0.00 CFM/sqft
Heating.....: 40.0 CFM
Typical.....: 20.0 CFM
When Fan On.? N

FLOOR

Type.....:Above Conditioned Space

WALL Exp	Gross Area (sqft)	WALL Type	WINDOW Type	WINDOW Qty	WINDOW Shade	WINDOW Type	WINDOW Qty	WINDOW Shade	Any Doors?
S	130.0	3	2	2	-	5	0	-	N
E	140.0	3	2	0	-	5	0	-	N

ROOF Exp	Slope (deg)	Gross Area (sqft)	ROOF Type	SKYLIGHT Type	SKYLIGHT Qty
HOR	-	182.0	2	1	0

No partition data for this space.

SPACE DESCRIPTION

Prepared by: NEW ENGLAND DIVISION 12-10-94

HAP v3.04 Page 1

****

GENERAL

Name.....: BLDG 644, OFFICE 311/312
Floor Area.....: 182.0 sqft
Building Weight.: 130.0 lb/sqft
Windows Shaded..? N
Partitions Used.? N

LIGHTING

Overhead Fixture: Recessed
Lamp Wattage....: 2.00 W/sqft
Ballast Mult....: 1.25
Task Lighting...: 0.00 W/sqft

PEOPLE

Occupancy.....: 2 People
Activity Level..: Office Work
Sensible.....: 245.0 BTU/hr
Latent.....: 205.0 BTU/hr

OTHER LOADS

Equipment.....: 0.00 W/sqft
Misc. Sensible..: 0.0 BTU/hr
Misc. Latent....: 0.0 BTU/hr

SCHEDULES

Lighting....: BUILDING 642, FT DEVENS
Task Lights.: BUILDING 642, FT DEVENS
People.....: BUILDING 642, FT DEVENS
Equipment...: BUILDING 642, FT DEVENS
Misc. Sens..: BUILDING 642, FT DEVENS
Misc. Latent: BUILDING 642, FT DEVENS

INFILTRATION

Cooling.....: 0.00 CFM/sqft
Heating.....: 40.0 CFM
Typical.....: 20.0 CFM
When Fan On.? N

FLOOR

Type.....:Above Conditioned Space

WALL Exp	Gross Area (sqft)	WALL Type	WINDOW Type	WINDOW Qty	WINDOW Shade	WINDOW Type	WINDOW Qty	WINDOW Shade	Any Doors?
S	130.0	3	2	2	-	5	0	-	N

ROOF Exp	Slope (deg)	Gross Area (sqft)	ROOF Type	SKYLIGHT Type	SKYLIGHT Qty
HOR	-	182.0	2	1	0

No partition data for this space.

SPACE DESCRIPTION

Prepared by: NEW ENGLAND DIVISION 12-10-94

HAP v3.04 Page 1

****

GENERAL

Name.....: BLDG 644, OFFICE 313
Floor Area.....: 266.0 sqft
Building Weight.: 130.0 lb/sqft
Windows Shaded..? N
Partitions Used.? N

LIGHTING

Overhead Fixture: Recessed
Lamp Wattage....: 2.00 W/sqft
Ballast Mult....: 1.25
Task Lighting...: 0.00 W/sqft

PEOPLE

Occupancy.....: 3 People
Activity Level..: Office Work
Sensible.....: 245.0 BTU/hr
Latent.....: 205.0 BTU/hr

OTHER LOADS

Equipment.....: 0.00 W/sqft
Misc. Sensible..: 0.0 BTU/hr
Misc. Latent....: 0.0 BTU/hr

SCHEDULES

Lighting....: BUILDING 642, FT DEVENS
Task Lights.: BUILDING 642, FT DEVENS
People.....: BUILDING 642, FT DEVENS
Equipment...: BUILDING 642, FT DEVENS
Misc. Sens..: BUILDING 642, FT DEVENS
Misc. Latent: BUILDING 642, FT DEVENS

INFILTRATION

Cooling.....: 0.00 CFM/sqft
Heating.....: 20.0 CFM
Typical.....: 10.0 CFM
When Fan On.? N

FLOOR

Type.....:Above Conditioned Space

WALL Exp	Gross Area (sqft)	WALL Type	WINDOW Type	WINDOW Qty	WINDOW Shade	WINDOW Type	WINDOW Qty	WINDOW Shade	Any Doors?
S	50.0	3	2	1	-	5	0	-	N

ROOF Exp	Slope (deg)	Gross Area (sqft)	ROOF Type	SKYLIGHT Type	SKYLIGHT Qty
HOR	-	266.0	2	1	0

No partition data for this space.

SPACE DESCRIPTION

Prepared by: NEW ENGLAND DIVISION 12-10-94

HAP v3.04 Page 1

****

GENERAL

Name.....: BLDG 644, REST 316 & 323
Floor Area.....: 624.0 sqft
Building Weight.: 130.0 lb/sqft
Windows Shaded..? N
Partitions Used.? N

LIGHTING

Overhead Fixture: Recessed
Lamp Wattage....: 2.00 W/sqft
Ballast Mult....: 1.25
Task Lighting...: 0.00 W/sqft

PEOPLE

Occupancy.....: 0 People
Activity Level..: Office Work
Sensible.....: 245.0 BTU/hr
Latent.....: 205.0 BTU/hr

OTHER LOADS

Equipment.....: 0.00 W/sqft
Misc. Sensible..: 0.0 BTU/hr
Misc. Latent....: 0.0 BTU/hr

SCHEDULES

Lighting....: BUILDING 642, FT DEVENS
Task Lights.: BUILDING 642, FT DEVENS
People.....: BUILDING 642, FT DEVENS
Equipment...: BUILDING 642, FT DEVENS
Misc. Sens..: BUILDING 642, FT DEVENS
Misc. Latent: BUILDING 642, FT DEVENS

INFILTRATION

Cooling.....: 0.00 CFM/sqft
Heating.....: 100.0 CFM
Typical.....: 50.0 CFM
When Fan On.? N

FLOOR

Type.....:Above Conditioned Space

WALL Exp	Gross Area (sqft)	WALL Type	WINDOW Type	WINDOW Qty	WINDOW Shade	WINDOW Type	WINDOW Qty	WINDOW Shade	Any Doors?
E	480.0	3	2	5	-	5	0	-	N

ROOF Exp	Slope (deg)	Gross Area (sqft)	ROOF Type	SKYLIGHT Type	SKYLIGHT Qty
HOR	-	648.0	2	1	0

No partition data for this space.

SPACE DESCRIPTION

Prepared by: NEW ENGLAND DIVISION 12-10-94

HAP v3.04 Page 1

****

GENERAL

Name.....: BLDG 644, STOR 318 & 321
Floor Area.....: 125.0 sqft
Building Weight.: 130.0 lb/sqft
Windows Shaded..? N
Partitions Used.? N

LIGHTING

Overhead Fixture: Recessed
Lamp Wattage....: 2.00 W/sqft
Ballast Mult....: 1.25
Task Lighting...: 0.00 W/sqft

PEOPLE

Occupancy.....: 0 People
Activity Level..: Office Work
Sensible.....: 245.0 BTU/hr
Latent.....: 205.0 BTU/hr

OTHER LOADS

Equipment.....: 0.00 W/sqft
Misc. Sensible..: 0.0 BTU/hr
Misc. Latent....: 0.0 BTU/hr

SCHEDULES

Lighting....: BUILDING 642, FT DEVENS
Task Lights.: BUILDING 642, FT DEVENS
People.....: BUILDING 642, FT DEVENS
Equipment...: BUILDING 642, FT DEVENS
Misc. Sens..: BUILDING 642, FT DEVENS
Misc. Latent: BUILDING 642, FT DEVENS

INFILTRATION

Cooling.....: 0.00 CFM/sqft
Heating.....: 20.0 CFM
Typical.....: 10.0 CFM
When Fan On.? N

FLOOR

Type.....:Above Conditioned Space

WALL Exp	Gross Area (sqft)	WALL Type	WINDOW Type	WINDOW Qty	WINDOW Shade	WINDOW Type	WINDOW Qty	WINDOW Shade	Any Doors?
E	110.0	3	2	1	-	1	0	-	N

ROOF Exp	Slope (deg)	Gross Area (sqft)	ROOF Type	SKYLIGHT Type	SKYLIGHT Qty
HOR	-	148.5	2	1	0

No partition data for this space.

SPACE DESCRIPTION

Prepared by: NEW ENGLAND DIVISION 12-10-94

HAP v3.04 Page 1

****

GENERAL

Name.....: BLDG 644, OFFICE 319/320
Floor Area.....: 266.0 sqft
Building Weight.: 130.0 lb/sqft
Windows Shaded..? N
Partitions Used.? N

LIGHTING

Overhead Fixture: Recessed
Lamp Wattage....: 2.00 W/sqft
Ballast Mult....: 1.25
Task Lighting...: 0.00 W/sqft

PEOPLE

Occupancy.....: 3 People
Activity Level..: Office Work
Sensible.....: 245.0 BTU/hr
Latent.....: 205.0 BTU/hr

OTHER LOADS

Equipment.....: 0.00 W/sqft
Misc. Sensible..: 0.0 BTU/hr
Misc. Latent....: 0.0 BTU/hr

SCHEDULES

Lighting....: BUILDING 642, FT DEVENS
Task Lights.: BUILDING 642, FT DEVENS
People.....: BUILDING 642, FT DEVENS
Equipment...: BUILDING 642, FT DEVENS
Misc. Sens..: BUILDING 642, FT DEVENS
Misc. Latent: BUILDING 642, FT DEVENS

INFILTRATION

Cooling.....: 0.00 CFM/sqft
Heating.....: 60.0 CFM
Typical.....: 30.0 CFM
When Fan On.? N

FLOOR

Type.....:Above Conditioned Space

WALL Exp	Gross Area (sqft)	WALL Type	WINDOW Type	WINDOW Qty	WINDOW Shade	WINDOW Type	WINDOW Qty	WINDOW Shade	Any Doors?
E	195.0	3	2	3	-	5	0	-	N

ROOF Exp	Slope (deg)	Gross Area (sqft)	ROOF Type	SKYLIGHT Type	SKYLIGHT Qty
HOR	-	263.3	2	1	0

No partition data for this space.

SPACE DESCRIPTION

Prepared by: NEW ENGLAND DIVISION 12-10-94

HAP v3.04 Page 1

****

GENERAL

Name.....: BLDG 644, OFFICE 326
Floor Area.....: 240.0 sqft
Building Weight.: 130.0 lb/sqft
Windows Shaded..? N
Partitions Used.? N

LIGHTING

Overhead Fixture: Recessed
Lamp Wattage....: 2.00 W/sqft
Ballast Mult....: 1.25
Task Lighting...: 0.00 W/sqft

PEOPLE

Occupancy.....: 3 People
Activity Level..: Office Work
Sensible.....: 245.0 BTU/hr
Latent.....: 205.0 BTU/hr

OTHER LOADS

Equipment.....: 0.00 W/sqft
Misc. Sensible..: 0.0 BTU/hr
Misc. Latent....: 0.0 BTU/hr

SCHEDULES

Lighting....: BUILDING 642, FT DEVENS
Task Lights.: BUILDING 642, FT DEVENS
People.....: BUILDING 642, FT DEVENS
Equipment...: BUILDING 642, FT DEVENS
Misc. Sens..: BUILDING 642, FT DEVENS
Misc. Latent: BUILDING 642, FT DEVENS

INFILTRATION

Cooling.....: 0.00 CFM/sqft
Heating.....: 20.0 CFM
Typical.....: 10.0 CFM
When Fan On.? N

FLOOR

Type.....:Above Conditioned Space

WALL Exp	Gross Area (sqft)	WALL Type	WINDOW Type	WINDOW Qty	WINDOW Shade	WINDOW Type	WINDOW Qty	WINDOW Shade	Any Doors?
N	50.0	3	2	1	-	5	0	-	N

ROOF Exp	Slope (deg)	Gross Area (sqft)	ROOF Type	SKYLIGHT Type	SKYLIGHT Qty
HOR	-	240.0	2	1	0

No partition data for this space.

SPACE DESCRIPTION

Prepared by: NEW ENGLAND DIVISION 12-10-94

HAP v3.04 Page 1

****

GENERAL

Name.....: BLDG 644, OFFICE 327/328
Floor Area.....: 173.0 sqft
Building Weight.: 130.0 lb/sqft
Windows Shaded..? N
Partitions Used.? N

LIGHTING

Overhead Fixture: Recessed
Lamp Wattage....: 2.00 W/sqft
Ballast Mult....: 1.25
Task Lighting...: 0.00 W/sqft

PEOPLE

Occupancy.....: 2 People
Activity Level..: Office Work
Sensible.....: 245.0 BTU/hr
Latent.....: 205.0 BTU/hr

OTHER LOADS

Equipment.....: 0.00 W/sqft
Misc. Sensible..: 0.0 BTU/hr
Misc. Latent....: 0.0 BTU/hr

SCHEDULES

Lighting....: BUILDING 642, FT DEVENS
Task Lights.: BUILDING 642, FT DEVENS
People.....: BUILDING 642, FT DEVENS
Equipment...: BUILDING 642, FT DEVENS
Misc. Sens..: BUILDING 642, FT DEVENS
Misc. Latent: BUILDING 642, FT DEVENS

INFILTRATION

Cooling.....: 0.00 CFM/sqft
Heating.....: 40.0 CFM
Typical.....: 20.0 CFM
When Fan On.? N

FLOOR

Type.....:Above Conditioned Space

WALL Exp	Gross Area (sqft)	WALL Type	WINDOW Type	WINDOW Qty	WINDOW Shade	WINDOW Type	WINDOW Qty	WINDOW Shade	Any Doors?
N	135.0	3	2	2	-	5	0	-	N

ROOF Exp	Slope (deg)	Gross Area (sqft)	ROOF Type	SKYLIGHT Type	SKYLIGHT Qty
HOR	-	189.0	2	1	0

No partition data for this space.

SPACE DESCRIPTION

Prepared by: NEW ENGLAND DIVISION 12-10-94

HAP v3.04 Page 1

****

GENERAL

Name.....: BLDG 644, OFFICE 329
Floor Area.....: 189.0 sqft
Building Weight.: 130.0 lb/sqft
Windows Shaded..? N
Partitions Used.? N

LIGHTING

Overhead Fixture: Recessed
Lamp Wattage....: 2.00 W/sqft
Ballast Mult....: 1.25
Task Lighting...: 0.00 W/sqft

PEOPLE

Occupancy.....: 2 People
Activity Level..: Office Work
Sensible.....: 245.0 BTU/hr
Latent.....: 205.0 BTU/hr

OTHER LOADS

Equipment.....: 0.00 W/sqft
Misc. Sensible..: 0.0 BTU/hr
Misc. Latent....: 0.0 BTU/hr

SCHEDULES

Lighting....: BUILDING 642, FT DEVENS
Task Lights.: BUILDING 642, FT DEVENS
People.....: BUILDING 642, FT DEVENS
Equipment...: BUILDING 642, FT DEVENS
Misc. Sens..: BUILDING 642, FT DEVENS
Misc. Latent: BUILDING 642, FT DEVENS

INFILTRATION

Cooling.....: 0.00 CFM/sqft
Heating.....: 40.0 CFM
Typical.....: 20.0 CFM
When Fan On.? N

FLOOR

Type.....:Above Conditioned Space

WALL Exp	Gross Area (sqft)	WALL Type	WINDOW Type	WINDOW Qty	WINDOW Shade	WINDOW Type	WINDOW Qty	WINDOW Shade	Any Doors?
N	135.0	3	2	2	-	5	0	-	N
E	140.0	3	2	0	-	5	0	-	N

ROOF Exp	Slope (deg)	Gross Area (sqft)	ROOF Type	SKYLIGHT Type	SKYLIGHT Qty
HOR	-	189.0	2	1	0

No partition data for this space.

SPACE DESCRIPTION

Prepared by: NEW ENGLAND DIVISION 12-10-94

HAP v3.04 Page 1

****

GENERAL

Name.....: BLDG 644, OFFICE 330
Floor Area.....: 352.0 sqft
Building Weight.: 130.0 lb/sqft
Windows Shaded..? N
Partitions Used.? N

LIGHTING

Overhead Fixture: Recessed
Lamp Wattage....: 2.00 W/sqft
Ballast Mult....: 1.25
Task Lighting...: 0.00 W/sqft

PEOPLE

Occupancy.....: 4 People
Activity Level..: Office Work
Sensible.....: 245.0 BTU/hr
Latent.....: 205.0 BTU/hr

OTHER LOADS

Equipment.....: 0.00 W/sqft
Misc. Sensible..: 0.0 BTU/hr
Misc. Latent....: 0.0 BTU/hr

SCHEDULES

Lighting....: BUILDING 642, FT DEVENS
Task Lights.: BUILDING 642, FT DEVENS
People.....: BUILDING 642, FT DEVENS
Equipment...: BUILDING 642, FT DEVENS
Misc. Sens..: BUILDING 642, FT DEVENS
Misc. Latent: BUILDING 642, FT DEVENS

INFILTRATION

Cooling.....: 0.00 CFM/sqft
Heating.....: 60.0 CFM
Typical.....: 30.0 CFM
When Fan On.? N

FLOOR

Type.....:Above Conditioned Space

WALL Exp	Gross Area (sqft)	WALL Type	WINDOW Type	WINDOW Qty	WINDOW Shade	WINDOW Type	WINDOW Qty	WINDOW Shade	Any Doors?
S	195.0	3	2	3	-	5	0	-	N
E	195.0	3	2	0	-	5	0	-	N

ROOF Exp	Slope (deg)	Gross Area (sqft)	ROOF Type	SKYLIGHT Type	SKYLIGHT Qty
HOR	-	380.3	2	1	0

No partition data for this space.

SPACE DESCRIPTION

Prepared by: NEW ENGLAND DIVISION 12-10-94

HAP v3.04 Page 1

****

GENERAL

Name.....: 644, 331, 332, 333 & 334
Floor Area.....: 358.0 sqft
Building Weight.: 130.0 lb/sqft
Windows Shaded..? N
Partitions Used.? N

LIGHTING

Overhead Fixture: Recessed
Lamp Wattage....: 2.00 W/sqft
Ballast Mult....: 1.25
Task Lighting...: 0.00 W/sqft

PEOPLE

Occupancy.....: 4 People
Activity Level..: Office Work
Sensible.....: 245.0 BTU/hr
Latent.....: 205.0 BTU/hr

OTHER LOADS

Equipment.....: 0.00 W/sqft
Misc. Sensible..: 0.0 BTU/hr
Misc. Latent....: 0.0 BTU/hr

SCHEDULES

Lighting....: BUILDING 642, FT DEVENS
Task Lights.: BUILDING 642, FT DEVENS
People.....: BUILDING 642, FT DEVENS
Equipment...: BUILDING 642, FT DEVENS
Misc. Sens..: BUILDING 642, FT DEVENS
Misc. Latent: BUILDING 642, FT DEVENS

INFILTRATION

Cooling.....: 0.00 CFM/sqft
Heating.....: 60.0 CFM
Typical.....: 30.0 CFM
When Fan On.? N

FLOOR

Type.....:Above Conditioned Space

WALL Exp	Gross Area (sqft)	WALL Type	WINDOW Type	WINDOW Qty	WINDOW Shade	WINDOW Type	WINDOW Qty	WINDOW Shade	Any Doors?
S	195.0	3	2	3	-	5	0	-	N

ROOF Exp	Slope (deg)	Gross Area (sqft)	ROOF Type	SKYLIGHT Type	SKYLIGHT Qty
HOR	-	380.3	2	1	0

No partition data for this space.

SPACE DESCRIPTION

Prepared by: NEW ENGLAND DIVISION 12-10-94

HAP v3.04 Page 1

****

GENERAL
- Name.....: BLDG 644, OFFICE 335
- Floor Area.....: 352.0 sqft
- Building Weight.: 130.0 lb/sqft
- Windows Shaded..? N
- Partitions Used.? N

LIGHTING
- Overhead Fixture: Recessed
- Lamp Wattage....: 2.00 W/sqft
- Ballast Mult....: 1.25
- Task Lighting...: 0.00 W/sqft

PEOPLE
- Occupancy.....: 4 People
- Activity Level..: Office Work
- Sensible.....: 245.0 BTU/hr
- Latent.....: 205.0 BTU/hr

OTHER LOADS
- Equipment.....: 0.00 W/sqft
- Misc. Sensible..: 0.0 BTU/hr
- Misc. Latent....: 0.0 BTU/hr

SCHEDULES
- Lighting....: BUILDING 642, FT DEVENS
- Task Lights.: BUILDING 642, FT DEVENS
- People.....: BUILDING 642, FT DEVENS
- Equipment...: BUILDING 642, FT DEVENS
- Misc. Sens..: BUILDING 642, FT DEVENS
- Misc. Latent: BUILDING 642, FT DEVENS

INFILTRATION
- Cooling.....: 0.00 CFM/sqft
- Heating.....: 60.0 CFM
- Typical.....: 30.0 CFM
- When Fan On.? N

FLOOR
- Type.....:Above Conditioned Space

WALL Exp	Gross Area (sqft)	WALL Type	WINDOW Type	WINDOW Qty	WINDOW Shade	WINDOW Type	WINDOW Qty	WINDOW Shade	Any Doors?
S	195.0	3	2	3	-	5	0	-	N
W	195.0	3	2	0	-	5	0	-	N

ROOF Exp	Slope (deg)	Gross Area (sqft)	ROOF Type	SKYLIGHT Type	SKYLIGHT Qty
HOR	-	380.3	2	1	0

No partition data for this space.

SPACE DESCRIPTION

Prepared by: NEW ENGLAND DIVISION
HAP v3.04

12-10-94
Page 1

****

GENERAL
Name.....: BLDG 644, OFFICE 336
Floor Area.....: 164.0 sqft
Building Weight.: 130.0 lb/sqft
Windows Shaded..? N
Partitions Used.? N

LIGHTING
Overhead Fixture: Recessed
Lamp Wattage....: 2.00 W/sqft
Ballast Mult....: 1.25
Task Lighting...: 0.00 W/sqft

PEOPLE
Occupancy.....: 2 People
Activity Level..: Office Work
Sensible.....: 245.0 BTU/hr
Latent.....: 205.0 BTU/hr

OTHER LOADS
Equipment.....: 0.00 W/sqft
Misc. Sensible..: 0.0 BTU/hr
Misc. Latent....: 0.0 BTU/hr

SCHEDULES
Lighting....: BUILDING 642, FT DEVENS
Task Lights.: BUILDING 642, FT DEVENS
People.....: BUILDING 642, FT DEVENS
Equipment...: BUILDING 642, FT DEVENS
Misc. Sens..: BUILDING 642, FT DEVENS
Misc. Latent: BUILDING 642, FT DEVENS

INFILTRATION
Cooling.....: 0.00 CFM/sqft
Heating.....: 40.0 CFM
Typical.....: 20.0 CFM
When Fan On.? N

FLOOR
Type.....:Above Conditioned Space

WALL Exp	Gross Area (sqft)	WALL Type	WINDOW Type	WINDOW Qty	WINDOW Shade	WINDOW Type	WINDOW Qty	WINDOW Shade	Any Doors?
N	130.0	3	2	2	-	5	0	-	N
W	140.0	3	2	0	-	5	0	-	N

ROOF Exp	Slope (deg)	Gross Area (sqft)	ROOF Type	SKYLIGHT Type	SKYLIGHT Qty
HOR	-	182.0	2	1	0

No partition data for this space.

SPACE DESCRIPTION

Prepared by: NEW ENGLAND DIVISION 12-10-94

HAP v3.04 Page 1

****

GENERAL

Name.....: BLDG 644, OFFICE 337/338
Floor Area.....: 164.0 sqft
Building Weight.: 130.0 lb/sqft
Windows Shaded..? N
Partitions Used.? N

LIGHTING

Overhead Fixture: Recessed
Lamp Wattage....: 2.00 W/sqft
Ballast Mult....: 1.25
Task Lighting...: 0.00 W/sqft

PEOPLE

Occupancy.....: 2 People
Activity Level..: Office Work
Sensible.....: 245.0 BTU/hr
Latent.....: 205.0 BTU/hr

OTHER LOADS

Equipment.....: 0.00 W/sqft
Misc. Sensible..: 0.0 BTU/hr
Misc. Latent....: 0.0 BTU/hr

SCHEDULES

Lighting....: BUILDING 642, FT DEVENS
Task Lights.: BUILDING 642, FT DEVENS
People.....: BUILDING 642, FT DEVENS
Equipment...: BUILDING 642, FT DEVENS
Misc. Sens..: BUILDING 642, FT DEVENS
Misc. Latent: BUILDING 642, FT DEVENS

INFILTRATION

Cooling.....: 0.00 CFM/sqft
Heating.....: 40.0 CFM
Typical.....: 20.0 CFM
When Fan On.? N

FLOOR

Type.....:Above Conditioned Space

WALL Exp	Gross Area (sqft)	WALL Type	WINDOW Type	WINDOW Qty	WINDOW Shade	WINDOW Type	WINDOW Qty	WINDOW Shade	Any Doors?
N	130.0	3	2	2	-	5	0	-	N

ROOF Exp	Slope (deg)	Gross Area (sqft)	ROOF Type	SKYLIGHT Type	SKYLIGHT Qty
HOR	-	182.0	2	1	0

No partition data for this space.

SPACE DESCRIPTION

Prepared by: NEW ENGLAND DIVISION
HAP v3.04

12-10-94
Page 1

****

GENERAL
Name.....: BLDG 644, OFFICE 340
Floor Area.....: 336.0 sqft
Building Weight.: 130.0 lb/sqft
Windows Shaded..? N
Partitions Used.? N

LIGHTING
Overhead Fixture: Recessed
Lamp Wattage....: 2.00 W/sqft
Ballast Mult....: 1.25
Task Lighting...: 0.00 W/sqft

PEOPLE
Occupancy.....: 4 People
Activity Level..: Office Work
Sensible.....: 245.0 BTU/hr
Latent.....: 205.0 BTU/hr

OTHER LOADS
Equipment.....: 0.00 W/sqft
Misc. Sensible..: 0.0 BTU/hr
Misc. Latent....: 0.0 BTU/hr

SCHEDULES
Lighting....: BUILDING 642, FT DEVENS
Task Lights.: BUILDING 642, FT DEVENS
People.....: BUILDING 642, FT DEVENS
Equipment...: BUILDING 642, FT DEVENS
Misc. Sens..: BUILDING 642, FT DEVENS
Misc. Latent: BUILDING 642, FT DEVENS

INFILTRATION
Cooling.....: 0.00 CFM/sqft
Heating.....: 60.0 CFM
Typical.....: 30.0 CFM
When Fan On.? N

FLOOR
Type.....:Above Conditioned Space

WALL Exp	Gross Area (sqft)	WALL Type	WINDOW Type	WINDOW Qty	WINDOW Shade	WINDOW Type	WINDOW Qty	WINDOW Shade	Any Doors?
W	237.0	3	2	2	-	5	1	-	N

ROOF Exp	Slope (deg)	Gross Area (sqft)	ROOF Type	SKYLIGHT Type	SKYLIGHT Qty
HOR	-	336.0	2	1	0

No partition data for this space.

SPACE DESCRIPTION

Prepared by: NEW ENGLAND DIVISION
HAP v3.04

12-10-94
Page 1

****

GENERAL
Name.....: BLDG 644, OFFICE 341/344
Floor Area.....: 359.8 sqft
Building Weight.: 130.0 lb/sqft
Windows Shaded..? N
Partitions Used.? N

LIGHTING
Overhead Fixture: Recessed
Lamp Wattage....: 2.00 W/sqft
Ballast Mult....: 1.25
Task Lighting...: 0.00 W/sqft

PEOPLE
Occupancy.....: 4 People
Activity Level..: Office Work
Sensible.....: 245.0 BTU/hr
Latent.....: 205.0 BTU/hr

OTHER LOADS
Equipment.....: 0.00 W/sqft
Misc. Sensible..: 0.0 BTU/hr
Misc. Latent....: 0.0 BTU/hr

SCHEDULES
Lighting....: BUILDING 642, FT DEVENS
Task Lights.: BUILDING 642, FT DEVENS
People.....: BUILDING 642, FT DEVENS
Equipment...: BUILDING 642, FT DEVENS
Misc. Sens..: BUILDING 642, FT DEVENS
Misc. Latent: BUILDING 642, FT DEVENS

INFILTRATION
Cooling.....: 0.00 CFM/sqft
Heating.....: 80.0 CFM
Typical.....: 40.0 CFM
When Fan On.? N

FLOOR
Type.....:Above Conditioned Space

WALL Exp	Gross Area (sqft)	WALL Type	WINDOW Type	WINDOW Qty	WINDOW Shade	WINDOW Type	WINDOW Qty	WINDOW Shade	Any Doors?
W	257.0	3	2	4	-	5	0	-	N

ROOF Exp	Slope (deg)	Gross Area (sqft)	ROOF Type	SKYLIGHT Type	SKYLIGHT Qty
HOR	-	359.8	2	1	0

No partition data for this space.

SPACE DESCRIPTION

Prepared by: NEW ENGLAND DIVISION
HAP v3.04

12-10-94
Page 1

****

GENERAL
Name.....: BLDG 644, OFFICE 342/343
Floor Area.....: 266.0 sqft
Building Weight.: 130.0 lb/sqft
Windows Shaded..? N
Partitions Used.? N

LIGHTING
Overhead Fixture: Recessed
Lamp Wattage....: 2.00 W/sqft
Ballast Mult....: 1.25
Task Lighting...: 0.00 W/sqft

PEOPLE
Occupancy.....: 3 People
Activity Level..: Office Work
Sensible.....: 245.0 BTU/hr
Latent.....: 205.0 BTU/hr

OTHER LOADS
Equipment.....: 0.00 W/sqft
Misc. Sensible..: 0.0 BTU/hr
Misc. Latent....: 0.0 BTU/hr

SCHEDULES
Lighting....: BUILDING 642, FT DEVENS
Task Lights.: BUILDING 642, FT DEVENS
People.....: BUILDING 642, FT DEVENS
Equipment...: BUILDING 642, FT DEVENS
Misc. Sens..: BUILDING 642, FT DEVENS
Misc. Latent: BUILDING 642, FT DEVENS

INFILTRATION
Cooling.....: 0.00 CFM/sqft
Heating.....: 60.0 CFM
Typical.....: 30.0 CFM
When Fan On.? N

FLOOR
Type.....:Above Conditioned Space

WALL Exp	Gross Area (sqft)	WALL Type	WINDOW Type	WINDOW Qty	WINDOW Shade	WINDOW Type	WINDOW Qty	WINDOW Shade	Any Doors?
W	190.0	3	2	3	-	5	0	-	N

ROOF Exp	Slope (deg)	Gross Area (sqft)	ROOF Type	SKYLIGHT Type	SKYLIGHT Qty
HOR	-	266.0	2	1	0

No partition data for this space.

SPACE DESCRIPTION

Prepared by: NEW ENGLAND DIVISION 12-10-94

HAP v3.04 Page 1

****

GENERAL

Name.....: BLDG 644, OFFICE 345
Floor Area.....: 273.0 sqft
Building Weight.: 130.0 lb/sqft
Windows Shaded..? N
Partitions Used.? N

LIGHTING

Overhead Fixture: Recessed
Lamp Wattage....: 2.00 W/sqft
Ballast Mult....: 1.25
Task Lighting...: 0.00 W/sqft

PEOPLE

Occupancy.....: 3 People
Activity Level..: Office Work
Sensible.....: 245.0 BTU/hr
Latent.....: 205.0 BTU/hr

OTHER LOADS

Equipment.....: 0.00 W/sqft
Misc. Sensible..: 0.0 BTU/hr
Misc. Latent....: 0.0 BTU/hr

SCHEDULES

Lighting....: BUILDING 642, FT DEVENS
Task Lights.: BUILDING 642, FT DEVENS
People.....: BUILDING 642, FT DEVENS
Equipment...: BUILDING 642, FT DEVENS
Misc. Sens..: BUILDING 642, FT DEVENS
Misc. Latent: BUILDING 642, FT DEVENS

INFILTRATION

Cooling.....: 0.00 CFM/sqft
Heating.....: 60.0 CFM
Typical.....: 30.0 CFM
When Fan On.? N

FLOOR

Type.....:Above Conditioned Space

WALL Exp	Gross Area (sqft)	WALL Type	WINDOW Type	WINDOW Qty	WINDOW Shade	WINDOW Type	WINDOW Qty	WINDOW Shade	Any Doors?
W	195.0	3	2	2	-	5	1	-	N

ROOF Exp	Slope (deg)	Gross Area (sqft)	ROOF Type	SKYLIGHT Type	SKYLIGHT Qty
HOR	-	273.0	2	1	0

No partition data for this space.

SPACE DESCRIPTION

Prepared by: NEW ENGLAND DIVISION 12-10-94

HAP v3.04 Page 1

****

GENERAL

Name.....: BLDG 644, TELEPHONE 346
Floor Area.....: 70.0 sqft
Building Weight.: 130.0 lb/sqft
Windows Shaded..? N
Partitions Used.? N

LIGHTING

Overhead Fixture: Recessed
Lamp Wattage....: 2.00 W/sqft
Ballast Mult....: 1.25
Task Lighting...: 0.00 W/sqft

PEOPLE

Occupancy.....: 0 People
Activity Level..: Office Work
Sensible.....: 245.0 BTU/hr
Latent.....: 205.0 BTU/hr

OTHER LOADS

Equipment.....: 0.00 W/sqft
Misc. Sensible..: 0.0 BTU/hr
Misc. Latent....: 0.0 BTU/hr

SCHEDULES

Lighting....: BUILDING 642, FT DEVENS
Task Lights.: BUILDING 642, FT DEVENS
People.....: BUILDING 642, FT DEVENS
Equipment...: BUILDING 642, FT DEVENS
Misc. Sens..: BUILDING 642, FT DEVENS
Misc. Latent: BUILDING 642, FT DEVENS

INFILTRATION

Cooling.....: 0.00 CFM/sqft
Heating.....: 0.0 CFM
Typical.....: 0.0 CFM
When Fan On.? N

FLOOR

Type.....:Above Conditioned Space

WALL Exp	Gross Area (sqft)	WALL Type	WINDOW Type	WINDOW Qty	WINDOW Shade	WINDOW Type	WINDOW Qty	WINDOW Shade	Any Doors?
W	45.0	3	2	0	-	5	0	-	N

ROOF Exp	Slope (deg)	Gross Area (sqft)	ROOF Type	SKYLIGHT Type	SKYLIGHT Qty
HOR	-	70.0	2	1	0

No partition data for this space.

SPACE DESCRIPTION

Prepared by: NEW ENGLAND DIVISION 12-10-94

HAP v3.04 Page 1

****

GENERAL

Name.....: BLDG 644, C31 & C35
Floor Area.....: 292.5 sqft
Building Weight.: 130.0 lb/sqft
Windows Shaded..? N
Partitions Used.? N

LIGHTING

Overhead Fixture: Recessed
Lamp Wattage....: 2.00 W/sqft
Ballast Mult....: 1.25
Task Lighting...: 0.00 W/sqft

PEOPLE

Occupancy.....: 0 People
Activity Level..: Office Work
Sensible.....: 245.0 BTU/hr
Latent.....: 205.0 BTU/hr

OTHER LOADS

Equipment.....: 0.00 W/sqft
Misc. Sensible..: 0.0 BTU/hr
Misc. Latent....: 0.0 BTU/hr

SCHEDULES

Lighting....: BUILDING 642, FT DEVENS
Task Lights.: BUILDING 642, FT DEVENS
People.....: BUILDING 642, FT DEVENS
Equipment...: BUILDING 642, FT DEVENS
Misc. Sens..: BUILDING 642, FT DEVENS
Misc. Latent: BUILDING 642, FT DEVENS

INFILTRATION

Cooling.....: 0.00 CFM/sqft
Heating.....: 40.0 CFM
Typical.....: 20.0 CFM
When Fan On.? N

FLOOR

Type.....:Above Conditioned Space

WALL Exp	Gross Area (sqft)	WALL Type	WINDOW Type	WINDOW Qty	WINDOW Shade	WINDOW Type	WINDOW Qty	WINDOW Shade	Any Doors?
W	50.0	3	1	0	-	1	0	-	Y

ROOF Exp	Slope (deg)	Gross Area (sqft)	ROOF Type	SKYLIGHT Type	SKYLIGHT Qty
HOR	-	292.5	2	1	0
-	-	-	-	-	-
-	-	-	-	-	-
-	-	-	-	-	-

DOOR

Gross Area..: 20.0 sqft
Uvalue.....: 0.300
Glass Area..: 0.0 sqft
Glass U-val.: 0.500
Shade Coeff.: 1.00
Glass Shaded? N

No partition data for this space.

SPACE DESCRIPTION

Prepared by: NEW ENGLAND DIVISION
HAP v3.04

12-10-94
Page 1

****

GENERAL
Name.....: BLDG 644, C32 & C36
Floor Area.....: 292.5 sqft
Building Weight.: 130.0 lb/sqft
Windows Shaded..? N
Partitions Used.? N

LIGHTING
Overhead Fixture: Recessed
Lamp Wattage....: 2.00 W/sqft
Ballast Mult....: 1.25
Task Lighting...: 0.00 W/sqft

PEOPLE
Occupancy.....: 0 People
Activity Level..: Office Work
Sensible.....: 245.0 BTU/hr
Latent.....: 205.0 BTU/hr

OTHER LOADS
Equipment.....: 0.00 W/sqft
Misc. Sensible..: 0.0 BTU/hr
Misc. Latent....: 0.0 BTU/hr

SCHEDULES
Lighting....: BUILDING 642, FT DEVENS
Task Lights.: BUILDING 642, FT DEVENS
People.....: BUILDING 642, FT DEVENS
Equipment...: BUILDING 642, FT DEVENS
Misc. Sens..: BUILDING 642, FT DEVENS
Misc. Latent: BUILDING 642, FT DEVENS

INFILTRATION
Cooling.....: 0.00 CFM/sqft
Heating.....: 40.0 CFM
Typical.....: 20.0 CFM
When Fan On.? N

FLOOR
Type.....:Above Conditioned Space

WALL Exp	Gross Area (sqft)	WALL Type	WINDOW Type	WINDOW Qty	WINDOW Shade	WINDOW Type	WINDOW Qty	WINDOW Shade	Any Doors?
E	50.0	3	1	0	-	1	0	-	Y

ROOF Exp	Slope (deg)	Gross Area (sqft)	ROOF Type	SKYLIGHT Type	SKYLIGHT Qty
HOR	-	292.5	2	1	0
-	-	-	-	-	-
-	-	-	-	-	-
-	-	-	-	-	-

DOOR
Gross Area..: 20.0 sqft
Uvalue.....: 0.300
Glass Area..: 0.0 sqft
Glass U-val.: 0.500
Shade Coeff.: 1.00
Glass Shaded? N

No partition data for this space.

SPACE DESCRIPTION

Prepared by: NEW ENGLAND DIVISION 12-10-94

HAP v3.04 Page 1

****

GENERAL

Name.....: BLDG 644, C33 & C34

Floor Area.....: 465.0 sqft

Building Weight.: 130.0 lb/sqft

Windows Shaded..? N

Partitions Used.? N

LIGHTING

Overhead Fixture: Recessed

Lamp Wattage....: 2.00 W/sqft

Ballast Mult....: 1.25

Task Lighting...: 0.00 W/sqft

PEOPLE

Occupancy.....: 0 People

Activity Level..: Office Work

Sensible.....: 245.0 BTU/hr

Latent.....: 205.0 BTU/hr

OTHER LOADS

Equipment.....: 0.00 W/sqft

Misc. Sensible..: 0.0 BTU/hr

Misc. Latent....: 0.0 BTU/hr

SCHEDULES

Lighting....: BUILDING 642, FT DEVENS

Task Lights.: BUILDING 642, FT DEVENS

People.....: BUILDING 642, FT DEVENS

Equipment...: BUILDING 642, FT DEVENS

Misc. Sens..: BUILDING 642, FT DEVENS

Misc. Latent: BUILDING 642, FT DEVENS

INFILTRATION

Cooling.....: 0.00 CFM/sqft

Heating.....: 0.0 CFM

Typical.....: 0.0 CFM

When Fan On.? N

FLOOR

Type.....:Above Conditioned Space

==========

No external wall or window data for this space.

==========

ROOF Exp	Slope (deg)	Gross Area (sqft)	ROOF Type	SKYLIGHT Type	SKYLIGHT Qty
HOR	-	465.0	2	1	0

==========

No partition data for this space.

==========

SPACE DESCRIPTION

Prepared by: NEW ENGLAND DIVISION
HAP v3.04

12-10-94
Page 1

****

GENERAL
Name.....: BLDG 644, STAIRS S31/S32
Floor Area.....: 126.0 sqft
Building Weight.: 130.0 lb/sqft
Windows Shaded..? N
Partitions Used.? N

LIGHTING
Overhead Fixture: Recessed
Lamp Wattage....: 2.00 W/sqft
Ballast Mult....: 1.25
Task Lighting...: 0.00 W/sqft

PEOPLE
Occupancy.....: 0 People
Activity Level..: Office Work
Sensible.....: 245.0 BTU/hr
Latent.....: 205.0 BTU/hr

OTHER LOADS
Equipment.....: 0.00 W/sqft
Misc. Sensible..: 0.0 BTU/hr
Misc. Latent....: 0.0 BTU/hr

SCHEDULES
Lighting....: BUILDING 642, FT DEVENS
Task Lights.: BUILDING 642, FT DEVENS
People.....: BUILDING 642, FT DEVENS
Equipment...: BUILDING 642, FT DEVENS
Misc. Sens..: BUILDING 642, FT DEVENS
Misc. Latent: BUILDING 642, FT DEVENS

INFILTRATION
Cooling.....: 0.00 CFM/sqft
Heating.....: 20.0 CFM
Typical.....: 10.0 CFM
When Fan On.? N

FLOOR
Type.....:Above Conditioned Space

WALL Exp	Gross Area (sqft)	WALL Type	WINDOW Type	WINDOW Qty	WINDOW Shade	WINDOW Type	WINDOW Qty	WINDOW Shade	Any Doors?
W	90.0	3	3	1	-	4	0	-	N

ROOF Exp	Slope (deg)	Gross Area (sqft)	ROOF Type	SKYLIGHT Type	SKYLIGHT Qty
HOR	-	126.0	2	1	0

No partition data for this space.

BUILDING 644

AIR SYSTEM INPUT DATA

AIR SYSTEM INPUT DATA

Name: BLDG 644, FIRST FLOOR HEATING
Type: TERMINAL UNITS - Convective Htg and Clg
Prepared by: NEW ENGLAND DIVISION

12-09-94
HAP v3.04
Page 1

****

1. SYSTEM NAME AND TYPE

Name.....: BLDG 644, FIRST FLOOR HEATING
Type.....: TERMINAL UNITS - Convective Htg and Clg
Number of Zones.: 20

2. SYSTEM DESCRIPTION

COOLING SYSTEM DATA
Is Cooling System Used.....? N
HEATING SYSTEM DATA
Is Heating System Used.....? Y
OUTDOOR VENTILATION DATA
Common Ventilation System Used? N
SAFETY FACTORS
Sensible Cooling Factor.....: 0 %
Latent Cooling Factor.....: 0 %
Heating Factor.....: 20 %

3. ZONE DATA

ZONE 1 (All Zones the Same)
T-Stat Zone Setpoint.....(F): 70.0

4. SCHEDULE DATA

HOURLY TSTAT SCHEDULES	0	0	0	0	0	0	0	0	0	0	1	1	1	1	1	1	1	1	1	1	2	2	2	2
	0	1	2	3	4	5	6	7	8	9	0	1	2	3	4	5	6	7	8	9	0	1	2	3
Design Day.....	X	X	X	X	X	X	X	X	X	X	X	X	X	X	X	X	X	X	X	X	X	X	X	X
Weekday.....	X	X	X	X	X	X	X	X	X	X	X	X	X	X	X	X	X	X	X	X	X	X	X	X
Saturday.....	X	X	X	X	X	X	X	X	X	X	X	X	X	X	X	X	X	X	X	X	X	X	X	X
Sunday.....	X	X	X	X	X	X	X	X	X	X	X	X	X	X	X	X	X	X	X	X	X	X	X	X

MONTHLY SCHEDULES	JAN	FEB	MAR	APR	MAY	JUN	JUL	AUG	SEP	OCT	NOV	DEC
Terminal Heating.....	XXX	XXX	XXX	XXX	XXX	XXX	XXX	XXX	XXX	XXX	XXX	XXX

AIR SYSTEM INPUT DATA

Name: BLDG 644, FIRST FLOOR HTG & CLG — 12-09-94
Type: TERMINAL UNITS - 2-Pipe Fan Coils — HAP v3.04
Prepared by: NEW ENGLAND DIVISION — Page 1

****

1. SYSTEM NAME AND TYPE

Name.....: BLDG 644, FIRST FLOOR HTG & CLG
Type.....: TERMINAL UNITS - 2-Pipe Fan Coils
Number of Zones.: 7

2. SYSTEM DESCRIPTION

COOLING SYSTEM DATA	
Supply Air.....:	55.0 F
Fan Cycled for Cooling.....?	Y
Coil Bypass Factor.....:	0.100
HEATING SYSTEM DATA	
Fan Cycled for Heating.....?	Y
Supply Air Temperature.....?	110.0 F
OUTDOOR VENTILATION DATA	
Common Ventilation System Used?	N
SAFETY FACTORS	
Sensible Cooling Factor.....:	20 %
Latent Cooling Factor.....:	20 %
Heating Factor.....:	20 %
OUTDOOR VENTILATION DATA	
Type of Control.....:	Constant Airflow Rate
Design Ventilation Airflow....:	0.0 CFM/person

3. ZONE DATA

ZONE	1	(All Zones the Same)
T-Stat Occupied Cooling....(F):	75.0	
Unoccupied Cooling..(F):	95.0	
Occupied Heating....(F):	70.0	
Unoccupied Heating..(F):	50.0	
Throttling Range....(F):	3.0	
Zone Terminal Type.....:	Fan Coil	
Fan Total Static....(in.wg.):	0.25	
Fan Efficiency.....(%):	54	

AIR SYSTEM INPUT DATA

Name: BLDG 644, FIRST FLOOR HTG & CLG — 12-09-94
Type: TERMINAL UNITS - 2-Pipe Fan Coils — HAP v3.04
Prepared by: NEW ENGLAND DIVISION — Page 2

****

4. SCHEDULE DATA

HOURLY TSTAT SCHEDULES	00	01	02	03	04	05	06	07	08	09	10	11	12	13	14	15	16	17	18	19	20	21	22	23
Design Day.....								X	X	X	X	X	X	X	X	X	X							
Weekday.....								X	X	X	X	X	X	X	X	X	X							
Saturday.....								X	X	X	X	X	X	X	X	X	X							
Sunday.....								X	X	X	X	X	X	X	X	X	X							

Cooling Available During Unoccupied Period ? N

MONTHLY SCHEDULES	JAN	FEB	MAR	APR	MAY	JUN	JUL	AUG	SEP	OCT	NOV	DEC
Terminal Heating.....	XXX	XXX	XXX	XXX	XXX				XXX	XXX	XXX	XXX
Terminal Cooling.....						XXX	XXX	XXX				

AIR SYSTEM INPUT DATA

Name: BLDG 644, ASSEMBLY HALL 113 — 12-09-94
Type: CONSTANT VOLUME - Single Zone CAV — HAP v3.04
Prepared by: NEW ENGLAND DIVISION — Page 1

****

1. SYSTEM NAME AND TYPE

Name.....: BLDG 644, ASSEMBLY HALL 113
Type.....: CONSTANT VOLUME - Single Zone CAV
Number of Zones.: 1

2. SYSTEM DESCRIPTION

COOLING SYSTEM DATA	
Is Central Cooling Used.....?	N
HEATING SYSTEM DATA	
Supply Air Temperature.....?	110.0 F
Fan Cycled for Heating.....?	N
Supply Air Reset.....:	Greatest Demand
Minimum Reset Temperature.....:	90.0 F
OUTDOOR VENTILATION DATA	
Type of Control.....:	Constant Airflow Rate
Design Ventilation Airflow....:	15.0 CFM/person
Dampers Open During Unocc Per.:	N
Damper Leak Rate.....:	0 %
SUPPLY DUCT DATA	
Duct Heat Gain.....:	0 %
Duct Leakage Rate.....:	0 %
RETURN PLENUM DATA	
Is a Return Plenum Used.....?	N
SUPPLY FAN DATA	
Fan Type.....:	Forward Curved
Configuration.....:	Draw-Thru
Fan Total Static.....:	0.50 in.wg.
Fan Efficiency.....:	54 %
RETURN FAN DATA	
Fan Type.....:	None
OUTDOOR AIR ECONOMIZER	
Outdoor Economizer Type.....:	None
PREHEAT COIL	
Preheat Coil Used.....?	N
PRECOOL COIL	
Precool Coil Used.....?	N
HUMIDIFICATION	
Humidification System Used....?	N
VENTILATION HEAT RECLAIM	
Reclaim Unit Type.....:	None
SAFETY FACTORS	
Sensible Cooling Factor.....:	20 %
Latent Cooling Factor.....:	20 %
Heating Factor.....:	20 %

3. ZONE DATA

ZONE	1	(All Zones the Same)
T-Stat Occupied Cooling....(F):	75.0	
Unoccupied Cooling..(F):	95.0	
Occupied Heating....(F):	70.0	
Unoccupied Heating..(F):	50.0	
Throttling Range....(F):	3.0	
Zone Heating Unit Type.....:	None	
Trip Temperature.....(F):	-	
Design Supply Temperature(F):	-	
Fan Total Static....(in.wg.):	-	
Fan Efficiency.....(%):	-	
Zone Terminal Type.....:	Diffuser	
Reheat Coil.....?	N	
Direct Exhaust Airflow...(CFM):	0.0	
Direct Exhaust Fan kW.....(kW):	0.0	

4. SCHEDULE DATA

HOURLY TSTAT SCHEDULES	00	01	02	03	04	05	06	07	08	09	10	11	12	13	14	15	16	17	18	19	20	21	22	23
Design Day.....								X	X	X	X	X	X	X	X	X	X							
Weekday.....								X	X	X	X	X	X	X	X	X	X							
Saturday.....								X	X	X	X	X	X	X	X	X	X							
Sunday.....								X	X	X	X	X	X	X	X	X	X							

MONTHLY SCHEDULES	JAN	FEB	MAR	APR	MAY	JUN	JUL	AUG	SEP	OCT	NOV	DEC
Central Heating.....	XXX	XXX	XXX	XXX	XXX				XXX	XXX	XXX	XXX

AIR SYSTEM INPUT DATA

Name: BLDG 644, SECOND FLOOR HEATING — 12-09-94
Type: TERMINAL UNITS - Convective Htg and Clg — HAP v3.04
Prepared by: NEW ENGLAND DIVISION — Page 1

****

1. SYSTEM NAME AND TYPE

Name.....: BLDG 644, SECOND FLOOR HEATING
Type.....: TERMINAL UNITS - Convective Htg and Clg
Number of Zones.: 13

2. SYSTEM DESCRIPTION

COOLING SYSTEM DATA
Is Cooling System Used.....? N
HEATING SYSTEM DATA
Is Heating System Used.....? Y
OUTDOOR VENTILATION DATA
Common Ventilation System Used? N
SAFETY FACTORS
Sensible Cooling Factor.....: 0 %
Latent Cooling Factor.....: 0 %
Heating Factor.....: 20 %

3. ZONE DATA

ZONE 1 (All Zones the Same)
T-Stat Zone Setpoint.....(F): 70.0

4. SCHEDULE DATA

HOURLY TSTAT SCHEDULES	0	0	0	0	0	0	0	0	0	0	1	1	1	1	1	1	1	1	1	2	2	2	2
	0	1	2	3	4	5	6	7	8	9	0	1	2	3	4	5	6	7	8	9	0	1	2	3
Design Day.....	X	X	X	X	X	X	X	X	X	X	X	X	X	X	X	X	X	X	X	X	X	X	X	X
Weekday.....	X	X	X	X	X	X	X	X	X	X	X	X	X	X	X	X	X	X	X	X	X	X	X	X
Saturday.....	X	X	X	X	X	X	X	X	X	X	X	X	X	X	X	X	X	X	X	X	X	X	X	X
Sunday.....	X	X	X	X	X	X	X	X	X	X	X	X	X	X	X	X	X	X	X	X	X	X	X	X

MONTHLY SCHEDULES	JAN	FEB	MAR	APR	MAY	JUN	JUL	AUG	SEP	OCT	NOV	DEC
Terminal Heating.....	XXX	XXX	XXX	XXX	XXX	XXX	XXX	XXX	XXX	XXX	XXX	XXX

AIR SYSTEM INPUT DATA

Name: BLDG 644, SECOND FLOOR HTG & CLG 12-09-94
Type: TERMINAL UNITS - 2-Pipe Fan Coils HAP v3.04
Prepared by: NEW ENGLAND DIVISION Page 1

****

1. SYSTEM NAME AND TYPE

Name.....: BLDG 644, SECOND FLOOR HTG & CLG
Type.....: TERMINAL UNITS - 2-Pipe Fan Coils
Number of Zones.: 20

==========

2. SYSTEM DESCRIPTION

COOLING SYSTEM DATA	
Supply Air.....:	55.0 F
Fan Cycled for Cooling.....?	Y
Coil Bypass Factor.....:	0.100
HEATING SYSTEM DATA	
Fan Cycled for Heating.....?	Y
Supply Air Temperature.....?	110.0 F
OUTDOOR VENTILATION DATA	
Common Ventilation System Used?	N
SAFETY FACTORS	
Sensible Cooling Factor.....:	20 %
Latent Cooling Factor.....:	20 %
Heating Factor.....:	20 %
OUTDOOR VENTILATION DATA	
Type of Control.....:	Constant Airflow Rate
Design Ventilation Airflow....:	0.0 CFM/person

==========

3. ZONE DATA

ZONE	1	(All Zones the Same)
T-Stat Occupied Cooling....(F):	75.0	
Unoccupied Cooling..(F):	95.0	
Occupied Heating....(F):	70.0	
Unoccupied Heating..(F):	50.0	
Throttling Range....(F):	3.0	
Zone Terminal Type.....:	Fan Coil	
Fan Total Static....(in.wg.):	0.25	
Fan Efficiency.....(%):	54	

==========

4. SCHEDULE DATA

HOURLY TSTAT SCHEDULES	00	01	02	03	04	05	06	07	08	09	10	11	12	13	14	15	16	17	18	19	20	21	22	23
Design Day.....								X	X	X	X	X	X	X	X	X	X							
Weekday.....								X	X	X	X	X	X	X	X	X	X							
Saturday.....								X	X	X	X	X	X	X	X	X	X							
Sunday.....								X	X	X	X	X	X	X	X	X	X							

Cooling Available During Unoccupied Period ? N

MONTHLY SCHEDULES	JAN	FEB	MAR	APR	MAY	JUN	JUL	AUG	SEP	OCT	NOV	DEC
Terminal Heating.....	XXX	XXX	XXX	XXX	XXX				XXX	XXX	XXX	XXX
Terminal Cooling.....						XXX	XXX	XXX				

AIR SYSTEM INPUT DATA

Name: BLDG 644, THIRD FLOOR HEATING
Type: TERMINAL UNITS - Convective Htg and Clg
Prepared by: NEW ENGLAND DIVISION

12-09-94
HAP v3.04
Page 1

****

1. SYSTEM NAME AND TYPE

Name.....: BLDG 644, THIRD FLOOR HEATING
Type.....: TERMINAL UNITS - Convective Htg and Clg
Number of Zones.: 3

2. SYSTEM DESCRIPTION

COOLING SYSTEM DATA
Is Cooling System Used.....? N
HEATING SYSTEM DATA
Is Heating System Used.....? Y
OUTDOOR VENTILATION DATA
Common Ventilation System Used? N
SAFETY FACTORS
Sensible Cooling Factor.....: 0 %
Latent Cooling Factor.....: 0 %
Heating Factor.....: 20 %

3. ZONE DATA

ZONE 1 (All Zones the Same)
T-Stat Zone Setpoint.....(F): 70.0

4. SCHEDULE DATA

HOURLY TSTAT SCHEDULES	0	0	0	0	0	0	0	0	0	0	1	1	1	1	1	1	1	1	1	1	2	2	2	2
	0	1	2	3	4	5	6	7	8	9	0	1	2	3	4	5	6	7	8	9	0	1	2	3
Design Day.....	X	X	X	X	X	X	X	X	X	X	X	X	X	X	X	X	X	X	X	X	X	X	X	X
Weekday.....	X	X	X	X	X	X	X	X	X	X	X	X	X	X	X	X	X	X	X	X	X	X	X	X
Saturday.....	X	X	X	X	X	X	X	X	X	X	X	X	X	X	X	X	X	X	X	X	X	X	X	X
Sunday.....	X	X	X	X	X	X	X	X	X	X	X	X	X	X	X	X	X	X	X	X	X	X	X	X

MONTHLY SCHEDULES	JAN	FEB	MAR	APR	MAY	JUN	JUL	AUG	SEP	OCT	NOV	DEC
Terminal Heating.....	XXX	XXX	XXX	XXX	XXX	XXX	XXX	XXX	XXX	XXX	XXX	XXX

AIR SYSTEM INPUT DATA

Name: BLDG 644, THIRD FLOOR HTG & CLG
Type: TERMINAL UNITS - 2-Pipe Fan Coils
Prepared by: NEW ENGLAND DIVISION

12-09-94
HAP v3.04
Page 1

****

1. SYSTEM NAME AND TYPE

Name.....: BLDG 644, THIRD FLOOR HTG & CLG
Type.....: TERMINAL UNITS - 2-Pipe Fan Coils
Number of Zones.: 25

2. SYSTEM DESCRIPTION

COOLING SYSTEM DATA	
Supply Air.....:	55.0 F
Fan Cycled for Cooling.....?	Y
Coil Bypass Factor.....:	0.100
HEATING SYSTEM DATA	
Fan Cycled for Heating.....?	Y
Supply Air Temperature.....?	110.0 F
OUTDOOR VENTILATION DATA	
Common Ventilation System Used?	N
SAFETY FACTORS	
Sensible Cooling Factor.....:	20 %
Latent Cooling Factor.....:	20 %
Heating Factor.....:	20 %
OUTDOOR VENTILATION DATA	
Type of Control.....:	Constant Airflow Rate
Design Ventilation Airflow....:	0.0 CFM/person

3. ZONE DATA

ZONE	1	(All Zones the Same)
T-Stat Occupied Cooling....(F):	75.0	
Unoccupied Cooling..(F):	95.0	
Occupied Heating....(F):	70.0	
Unoccupied Heating..(F):	50.0	
Throttling Range....(F):	3.0	
Zone Terminal Type.....:	Fan Coil	
Fan Total Static....(in.wg.):	0.25	
Fan Efficiency.....(%):	54	

4. SCHEDULE DATA

HOURLY TSTAT SCHEDULES	00	01	02	03	04	05	06	07	08	09	10	11	12	13	14	15	16	17	18	19	20	21	22	23
Design Day.....								X	X	X	X	X	X	X	X	X	X							
Weekday.....								X	X	X	X	X	X	X	X	X	X							
Saturday.....								X	X	X	X	X	X	X	X	X	X							
Sunday.....								X	X	X	X	X	X	X	X	X	X							

Cooling Available During Unoccupied Period ? N

MONTHLY SCHEDULES	JAN	FEB	MAR	APR	MAY	JUN	JUL	AUG	SEP	OCT	NOV	DEC
Terminal Heating.....	XXX	XXX	XXX	XXX	XXX				XXX	XXX	XXX	XXX
Terminal Cooling.....						XXX	XXX	XXX				

AIR SYSTEM INPUT DATA

Name: BLDG 644-FIRST FLOOR (MAU 644-1) 12-09-94
Type: CONSTANT VOLUME - Tempering System HAP v3.04
Prepared by: NEW ENGLAND DIVISION Page 1

****

1. SYSTEM NAME AND TYPE

Name.....: BLDG 644-FIRST FLOOR (MAU 644-1)
Type.....: CONSTANT VOLUME - Tempering System
Number of Zones.: 1

2. SYSTEM DESCRIPTION

OUTDOOR VENTILATION DATA
Design Ventilation Airflow....: 840.0 CFM
SUPPLY FAN DATA
Fan Type.....: Forward Curved
Configuration.....: Draw-Thru
Fan Total Static.....: 0.50 in.wg.
Fan Efficiency.....: 54 %
HEATING COIL
Use Heating Coil.....? Y
Setpoint.....: 70.0 F
COOLING COIL
Use Cooling Coil.....? Y
Setpoint.....: 75.0 F

4. SCHEDULE DATA

HOURLY TSTAT SCHEDULES	00	01	02	03	04	05	06	07	08	09	10	11	12	13	14	15	16	17	18	19	20	21	22	23
Design Day.....								X	X	X	X	X	X	X	X	X	X							
Weekday.....								X	X	X	X	X	X	X	X	X	X							
Saturday.....								X	X	X	X	X	X	X	X	X	X							
Sunday.....								X	X	X	X	X	X	X	X	X	X							

MONTHLY SCHEDULES	JAN	FEB	MAR	APR	MAY	JUN	JUL	AUG	SEP	OCT	NOV	DEC
Central Heating.....	XXX	XXX	XXX	XXX	XXX				XXX	XXX	XXX	XXX
Central Cooling.....						XXX	XXX	XXX				

AIR SYSTEM INPUT DATA

Name: BLDG 644-FIRST FLOOR (MAU 644-2)
Type: CONSTANT VOLUME - Tempering System
Prepared by: NEW ENGLAND DIVISION

12-09-94
HAP v3.04
Page 1

****

1. SYSTEM NAME AND TYPE

Name.....: BLDG 644-FIRST FLOOR (MAU 644-2)
Type.....: CONSTANT VOLUME - Tempering System
Number of Zones.: 1

2. SYSTEM DESCRIPTION

OUTDOOR VENTILATION DATA
Design Ventilation Airflow....: 1000.0 CFM
SUPPLY FAN DATA
Fan Type.....: Forward Curved
Configuration.....: Draw-Thru
Fan Total Static.....: 0.50 in.wg.
Fan Efficiency.....: 54 %
HEATING COIL
Use Heating Coil.....? Y
Setpoint.....: 70.0 F
COOLING COIL
Use Cooling Coil.....? N

4. SCHEDULE DATA

HOURLY TSTAT SCHEDULES	00	01	02	03	04	05	06	07	08	09	10	11	12	13	14	15	16	17	18	19	20	21	22	23
Design Day.....								X	X	X	X	X	X	X	X	X	X							
Weekday.....								X	X	X	X	X	X	X	X	X	X							
Saturday.....								X	X	X	X	X	X	X	X	X	X							
Sunday.....								X	X	X	X	X	X	X	X	X	X							

MONTHLY SCHEDULES	JAN	FEB	MAR	APR	MAY	JUN	JUL	AUG	SEP	OCT	NOV	DEC
Central Heating.....	XXX	XXX	XXX	XXX	XXX				XXX	XXX	XXX	XXX

AIR SYSTEM INPUT DATA

Name: BLDG 644-SECOND FL (MAU 644-3)
Type: CONSTANT VOLUME - Tempering System
Prepared by: NEW ENGLAND DIVISION

12-09-94
HAP v3.04
Page 1

****

1. SYSTEM NAME AND TYPE

Name.....: BLDG 644-SECOND FL (MAU 644-3)
Type.....: CONSTANT VOLUME - Tempering System
Number of Zones.: 1

2. SYSTEM DESCRIPTION

OUTDOOR VENTILATION DATA
Design Ventilation Airflow....: 2130.0 CFM

SUPPLY FAN DATA
Fan Type.....: Forward Curved
Configuration.....: Draw-Thru
Fan Total Static.....: 0.50 in.wg.
Fan Efficiency.....: 54 %

HEATING COIL
Use Heating Coil.....? Y
Setpoint.....: 70.0 F

COOLING COIL
Use Cooling Coil.....? Y
Setpoint.....: 75.0 F

4. SCHEDULE DATA

HOURLY TSTAT SCHEDULES	00	01	02	03	04	05	06	07	08	09	10	11	12	13	14	15	16	17	18	19	20	21	22	23
Design Day.....								X	X	X	X	X	X	X	X	X	X							
Weekday.....								X	X	X	X	X	X	X	X	X	X							
Saturday.....								X	X	X	X	X	X	X	X	X	X							
Sunday.....								X	X	X	X	X	X	X	X	X	X							

MONTHLY SCHEDULES	JAN	FEB	MAR	APR	MAY	JUN	JUL	AUG	SEP	OCT	NOV	DEC
Central Heating.....	XXX	XXX	XXX	XXX	XXX				XXX	XXX	XXX	XXX
Central Cooling.....						XXX	XXX	XXX				

AIR SYSTEM INPUT DATA

Name: BLDG 644-SECOND FL (MAU 644-4) 12-09-94
Type: CONSTANT VOLUME - Tempering System HAP v3.04
Prepared by: NEW ENGLAND DIVISION Page 1

****

1. SYSTEM NAME AND TYPE

Name.....: BLDG 644-SECOND FL (MAU 644-4)
Type.....: CONSTANT VOLUME - Tempering System
Number of Zones.: 1

2. SYSTEM DESCRIPTION

OUTDOOR VENTILATION DATA
Design Ventilation Airflow....: 2355.0 CFM
SUPPLY FAN DATA
Fan Type.....: Forward Curved
Configuration.....: Draw-Thru
Fan Total Static.....: 0.50 in.wg.
Fan Efficiency.....: 54 %
HEATING COIL
Use Heating Coil.....? Y
Setpoint.....: 70.0 F
COOLING COIL
Use Cooling Coil.....? Y
Setpoint.....: 75.0 F

4. SCHEDULE DATA

HOURLY TSTAT SCHEDULES	00	01	02	03	04	05	06	07	08	09	10	11	12	13	14	15	16	17	18	19	20	21	22	23
Design Day.....								X	X	X	X	X	X	X	X	X	X							
Weekday.....								X	X	X	X	X	X	X	X	X	X							
Saturday.....								X	X	X	X	X	X	X	X	X	X							
Sunday.....								X	X	X	X	X	X	X	X	X	X							

MONTHLY SCHEDULES	JAN	FEB	MAR	APR	MAY	JUN	JUL	AUG	SEP	OCT	NOV	DEC
Central Heating.....	XXX	XXX	XXX	XXX	XXX				XXX	XXX	XXX	XXX
Central Cooling.....						XXX	XXX	XXX				

AIR SYSTEM INPUT DATA

Name: BLDG 644-FIRST FLOOR (MAU 644-5) 12-09-94
Type: CONSTANT VOLUME - Tempering System HAP v3.04
Prepared by: NEW ENGLAND DIVISION Page 1

****

1. SYSTEM NAME AND TYPE

Name.....: BLDG 644-FIRST FLOOR (MAU 644-5)
Type.....: CONSTANT VOLUME - Tempering System
Number of Zones.: 1

2. SYSTEM DESCRIPTION

OUTDOOR VENTILATION DATA
Design Ventilation Airflow....: 3000.0 CFM
SUPPLY FAN DATA
Fan Type.....: Forward Curved
Configuration.....: Draw-Thru
Fan Total Static.....: 0.50 in.wg.
Fan Efficiency.....: 54 %
HEATING COIL
Use Heating Coil.....? Y
Setpoint.....: 70.0 F
COOLING COIL
Use Cooling Coil.....? N

4. SCHEDULE DATA

HOURLY TSTAT SCHEDULES	00	01	02	03	04	05	06	07	08	09	10	11	12	13	14	15	16	17	18	19	20	21	22	23
Design Day.....								X	X	X	X	X	X	X	X	X	X							
Weekday.....								X	X	X	X	X	X	X	X	X	X							
Saturday.....								X	X	X	X	X	X	X	X	X	X							
Sunday.....								X	X	X	X	X	X	X	X	X	X							

MONTHLY SCHEDULES	JAN	FEB	MAR	APR	MAY	JUN	JUL	AUG	SEP	OCT	NOV	DEC
Central Heating.....	XXX	XXX	XXX	XXX	XXX				XXX	XXX	XXX	XXX

AIR SYSTEM INPUT DATA

Name: BLDG 644-THIRD FLOOR (MAU 644-6) 12-09-94
Type: CONSTANT VOLUME - Tempering System HAP v3.04
Prepared by: NEW ENGLAND DIVISION Page 1

****

1. SYSTEM NAME AND TYPE

Name.....: BLDG 644-THIRD FLOOR (MAU 644-6)
Type.....: CONSTANT VOLUME - Tempering System
Number of Zones.: 1

2. SYSTEM DESCRIPTION

OUTDOOR VENTILATION DATA
Design Ventilation Airflow....: 830.0 CFM
SUPPLY FAN DATA
Fan Type.....: Forward Curved
Configuration.....: Draw-Thru
Fan Total Static.....: 0.50 in.wg.
Fan Efficiency.....: 54 %
HEATING COIL
Use Heating Coil.....? Y
Setpoint.....: 70.0 F
COOLING COIL
Use Cooling Coil.....? Y
Setpoint.....: 75.0 F

4. SCHEDULE DATA

HOURLY TSTAT SCHEDULES	00	01	02	03	04	05	06	07	08	09	10	11	12	13	14	15	16	17	18	19	20	21	22	23
Design Day.....								X	X	X	X	X	X	X	X	X	X							
Weekday.....								X	X	X	X	X	X	X	X	X	X							
Saturday.....								X	X	X	X	X	X	X	X	X	X							
Sunday.....								X	X	X	X	X	X	X	X	X	X							

MONTHLY SCHEDULES	JAN	FEB	MAR	APR	MAY	JUN	JUL	AUG	SEP	OCT	NOV	DEC
Central Heating.....	XXX	XXX	XXX	XXX	XXX				XXX	XXX	XXX	XXX
Central Cooling.....						XXX	XXX	XXX				

AIR SYSTEM INPUT DATA

Name: BLDG 644-THIRD FLOOR (MAU 644-7)
Type: CONSTANT VOLUME - Tempering System
Prepared by: NEW ENGLAND DIVISION

12-09-94
HAP v3.04
Page 1

****

1. SYSTEM NAME AND TYPE

Name.....: BLDG 644-THIRD FLOOR (MAU 644-7)
Type.....: CONSTANT VOLUME - Tempering System
Number of Zones.: 1

2. SYSTEM DESCRIPTION

OUTDOOR VENTILATION DATA	
Design Ventilation Airflow....:	830.0 CFM
SUPPLY FAN DATA	
Fan Type.....:	Forward Curved
Configuration.....:	Draw-Thru
Fan Total Static.....:	0.50 in.wg.
Fan Efficiency.....:	54 %
HEATING COIL	
Use Heating Coil.....?	Y
Setpoint.....:	70.0 F
COOLING COIL	
Use Cooling Coil.....?	Y
Setpoint.....:	75.0 F

4. SCHEDULE DATA

HOURLY TSTAT SCHEDULES	00	01	02	03	04	05	06	07	08	09	10	11	12	13	14	15	16	17	18	19	20	21	22	23
Design Day.....								X	X	X	X	X	X	X	X	X	X							
Weekday.....								X	X	X	X	X	X	X	X	X	X							
Saturday.....								X	X	X	X	X	X	X	X	X	X							
Sunday.....								X	X	X	X	X	X	X	X	X	X							

MONTHLY SCHEDULES	JAN	FEB	MAR	APR	MAY	JUN	JUL	AUG	SEP	OCT	NOV	DEC
Central Heating.....	XXX	XXX	XXX	XXX	XXX				XXX	XXX	XXX	XXX
Central Cooling.....						XXX	XXX	XXX				

BUILDING 644

AIR SYSTEM SIZING SUMMARY

AIR SYSTEM SIZING SUMMARY

Air System.: BLDG 644, FIRST FLOOR HEATING 12-09-94
Weather....: Fort Devens, Massachusetts HAP v3.04a
Prepared By: NEW ENGLAND DIVISION

****

AIR SYSTEM INFORMATION

System Type.....: (CONVECT)
Number of Zones.....: 20
Floor Area.....: 9616 sqft

TERMINAL SYSTEM SIZING SUMMARY

Air System.: BLDG 644, FIRST FLOOR HEATING 12-09-94
Weather....: Fort Devens, Massachusetts HAP v3.04a
Prepared By: NEW ENGLAND DIVISION Page 1

****

TABLE 1: TERMINAL UNIT SIZING DATA

Zone Name	COOLING COIL Sens. (MBH)	COOLING COIL Total (MBH)	COOLING COIL Water (gpm)	HEATING COIL Load (MBH)	HEATING COIL Water (gpm)	Air Flow (CFM)
STORAGE 101.....	0.0	0.0	0.00	6.9	0.69	0
STORAGE 102.....	0.0	0.0	0.00	16.5	1.65	0
STORAGE 103.....	0.0	0.0	0.00	10.6	1.06	0
STORAGE 104 & 105.....	0.0	0.0	0.00	14.1	1.41	0
PHYSICAL READINESS 106..	0.0	0.0	0.00	27.3	2.73	0
PHYSICAL READINESS 107..	0.0	0.0	0.00	13.9	1.39	0
VAULT 108.....	0.0	0.0	0.00	2.3	0.23	0
STORAGE 109 & 120.....	0.0	0.0	0.00	13.4	1.34	0
RESTROOM 111 & 119.....	0.0	0.0	0.00	8.9	0.89	0
STORAGE 112.....	0.0	0.0	0.00	9.7	0.97	0
VESTIBULE 115.....	0.0	0.0	0.00	1.7	0.17	0
STORAGE 117.....	0.0	0.0	0.00	9.7	0.97	0
VAULT 122.....	0.0	0.0	0.00	2.3	0.23	0
STAGING 123.....	0.0	0.0	0.00	9.0	0.90	0
RECEIVING 124.....	0.0	0.0	0.00	9.8	0.99	0
STORAGE 125.....	0.0	0.0	0.00	11.0	1.10	0
STOR 126, 127, 128 & 129	0.0	0.0	0.00	28.7	2.87	0
STORAGE 130.....	0.0	0.0	0.00	11.9	1.19	0
STORAGE 131.....	0.0	0.0	0.00	12.8	1.28	0
STORAGE 132.....	0.0	0.0	0.00	6.9	0.69	0

AIR SYSTEM DESIGN LOAD SUMMARY

Air System.: BLDG 644, FIRST FLOOR HEATING — 12-09-94
Weather....: Fort Devens, Massachusetts — HAP v3.04a
Prepared By: NEW ENGLAND DIVISION — Page 1 of 1

****

COOLING AT.....: Jan @ 1500 — HEATING AT.....: Winter Design
COOLING OA DB/RH..: 45.4 F / 90 % — HEATING OA DB...: 1.0 F

ZONE LOADS	Details	COOLING Sensible (BTU/hr)	COOLING Latent (BTU/hr)	HEATING Sensible (BTU/hr)
Solar Loads	1432 sqft	56400	-	-
Wall Transmission	4930 sqft	-21471	-	101654
Roof Transmission	0 sqft	0	-	0
Glass Transmission	1432 sqft	-24308	-	57803
Skylight Transmission	0 sqft	0	-	0
Door Transmission	141 sqft	-1225	-	2912
Floor Transmission	9616 sqft	0	-	27087
Partitions	0 sqft	0	-	0
Ceiling	0 sqft	0	-	0
Lighting	2.00 W/sqft	53790	-	-
Equipment	0.00 W/sqft	0	-	-
People	12 people	4864	11100	-
Infiltration		0	0	0
Miscellaneous		0	0	-
Safety Factor	0/ 0/ 20 %	0	0	37891
>>Total Zone Loads (1)		68051	11100	227348
Zone Conditioning (2)		68051	11100	227348
Plenum Wall Load	0 %	0	-	-
Plenum Roof Load	0 %	0	-	-
Plenum Lighting Load	0 %	0	-	-
Return Fan Load		0	-	0
Ventilation Load	0 CFM	0	0	0
Supply Fan Load	0 CFM	0	-	0
Space Fan Coil Fans		0	-	0
Duct Heat Gain/Loss	0 %	0	-	0
>>Total System Loads		68051	11100	227348
Terminal Unit Cooling		0	0	0
Terminal Unit Heating		-6014	-	227348
Precool Coil		0	0	0
Preheat Coil		0	-	0
Central Reheat Coil		0	-	-
Humidification Load		0	0	-
Terminal Reheat Coils		0	-	0
Space/Skin Heat Coils		0	-	0
>>Total Conditioning		-6014	0	227348

Notes: (1) Zone loads calculated at occupied thermostat setpoint.
(2) Zone conditioning based on heat extraction analysis.
(3) In the COOLING column, positive loads indicate heat gains, while positive coil loads indicate system heat removal.

AIR SYSTEM SIZING SUMMARY

Air System.: BLDG 644, FIRST FLOOR HTG & CLG
Weather....: Fort Devens, Massachusetts
Prepared By: NEW ENGLAND DIVISION

10-28-94
HAP v3.04a

****

AIR SYSTEM INFORMATION

System Type.....: (2P-FC)
Number of Zones.....: 7
Floor Area.....: 2869 sqft

TERMINAL SYSTEM SIZING SUMMARY

Air System.: BLDG 644, FIRST FLOOR HTG & CLG 10-28-94
Weather....: Fort Devens, Massachusetts HAP v3.04a
Prepared By: NEW ENGLAND DIVISION Page 1

****

TABLE 1: TERMINAL UNIT SIZING DATA

Zone Name	COOLING COIL Sens. (MBH)	COOLING COIL Total (MBH)	COOLING COIL Water (gpm)	HEATING COIL Load (MBH)	HEATING COIL Water (gpm)	Air Flow (CFM)
CLASSROOM 118.....	8.7	9.0	1.81	7.2	0.72	301
LOBBY 135.....	11.8	11.8	2.35	8.0	0.80	439
RMS 136, 137, 138 & 139.	46.0	46.0	9.21	31.9	3.19	1723
ELECTRIC 140.....	7.2	7.2	1.44	5.3	0.53	270
TELEPHONE 141.....	3.6	3.6	0.72	2.6	0.26	135
VESTIBULES 134 & 142....	4.9	5.2	1.05	6.6	0.66	190
CORRIDORS C12 & C16.....	6.1	6.9	1.38	2.6	0.26	216

AIR SYSTEM DESIGN LOAD SUMMARY

Air System.: BLDG 644, FIRST FLOOR HTG & CLG
Weather....: Fort Devens, Massachusetts
Prepared By: NEW ENGLAND DIVISION

10-28-94
HAP v3.04a

****

COOLING AT.....: Jul @ 1600
COOLING OA DB/RH..: 88.3 F / 45 %

HEATING AT.....: Winter Design
HEATING OA DB...: 1.0 F

ZONE LOADS	Details	COOLING Sensible (BTU/hr)	COOLING Latent (BTU/hr)	HEATING Sensible (BTU/hr)
Solar Loads	374 sqft	26668	-	-
Wall Transmission	1134 sqft	10062	-	23387
Roof Transmission	0 sqft	0	-	0
Glass Transmission	374 sqft	2039	-	15189
Skylight Transmission	0 sqft	0	-	0
Door Transmission	67 sqft	186	-	1387
Floor Transmission	2869 sqft	0	-	6920
Partitions	0 sqft	0	-	0
Ceiling	0 sqft	0	-	0
Lighting	2.00 W/sqft	16181	-	-
Equipment	0.00 W/sqft	0	-	-
People	15 people	2907	3116	-
Infiltration		0	0	0
Miscellaneous		0	0	-
Safety Factor	20/ 20/ 20 %	11609	623	9377
>>Total Zone Loads (1)		69651	3739	56260
Zone Conditioning (2)		86927	3739	64419
Plenum Wall Load	0 %	0	-	-
Plenum Roof Load	0 %	0	-	-
Plenum Lighting Load	0 %	0	-	-
Return Fan Load		0	-	0
Ventilation Load	0 CFM	0	0	0
Supply Fan Load	0 CFM	0	-	0
Space Fan Coil Fans		607	-	-333
Duct Heat Gain/Loss	0 %	0	-	0
>>Total System Loads		87534	3739	64086
Terminal Unit Cooling		87534	1506	0
Terminal Unit Heating		0	-	64086
Precool Coil		0	0	0
Preheat Coil		0	-	0
Central Reheat Coil		0	-	-
Humidification Load		0	0	-
Terminal Reheat Coils		0	-	0
Space/Skin Heat Coils		0	-	0
>>Total Conditioning		87534	1506	64086

Notes: (1) Zone loads calculated at occupied thermostat setpoint.
(2) Zone conditioning based on heat extraction analysis.
(3) In the COOLING column, positive loads indicate heat gains, while positive coil loads indicate system heat removal.

AIR SYSTEM SIZING SUMMARY

Air System.: BLDG 644, ASSEMBLY HALL 113 — 12-09-94
Weather....: Fort Devens, Massachusetts — HAP v3.04a
Prepared By: NEW ENGLAND DIVISION — Page 1 of 1

****

AIR SYSTEM INFORMATION

System Type.....: (SZ CAV)
Number of Zones.....: 1
Floor Area.....: 3422 sqft

CENTRAL HEATING COIL SIZING DATA

Max coil load (BTU/hr)...:	335334	BTU/hr/sqft.....:	98.0
Coil airflow (CFM).....:	3000	Water gpm @ 20F drop:	33.55
Design supply temp (F)...:	110.0		

SUPPLY FAN SIZING DATA

Actual airflow (CFM).....:	3000
Standard airflow (CFM)...:	2971

VENTILATION AIR DATA

Airflow (CFM).....:	3000	CFM/person.....:	15.00
CFM/sqft.....:	0.88		

ZONE SIZING SUMMARY

Air System.: BLDG 644, ASSEMBLY HALL 113 — 12-09-94
Weather....: Fort Devens, Massachusetts — HAP v3.04a
Prepared By: NEW ENGLAND DIVISION — Page 1

****

TABLE 1: ZONE SIZING DATA

Zone Name	Cooling Sensible (MBH)	Air Flow (CFM)	Design Mon Hour	Heating Load (MBH)	Water Rate (gpm)
ASSEMBLY HALL 113.....	90.8	3000	Sep 1500	116.5	11.66

Note: Zone loads calculated at occupied thermostat setpoint.

TABLE 2: SPACE AIRFLOWS (Based On Zone CFM/sqft)

Zone Name	Zone Airflow (CFM/sqft)	Space Name	Space Airflow (CFM)
ASSEMBLY HALL 113.....	0.88	BLDG 644, ASSEMBLY 113...	3000

AIR SYSTEM DESIGN LOAD SUMMARY

Air System.: BLDG 644, ASSEMBLY HALL 113 — 12-09-94
Weather....: Fort Devens, Massachusetts — HAP v3.04a
Prepared By: NEW ENGLAND DIVISION —

****

COOLING AT.....: Jan @ 1500 — HEATING AT.....: Winter Design
COOLING OA DB/RH..: 45.4 F / 90 % — HEATING OA DB...: 1.0 F

ZONE LOADS	Details	COOLING Sensible (BTU/hr)	COOLING Latent (BTU/hr)	HEATING Sensible (BTU/hr)
Solar Loads	403 sqft	12332	-	-
Wall Transmission	1292 sqft	-7923	-	26632
Roof Transmission	2067 sqft	-8741	-	16518
Glass Transmission	403 sqft	-7987	-	16202
Skylight Transmission	0 sqft	0	-	0
Door Transmission	60 sqft	-615	-	1248
Floor Transmission	1237 sqft	-21038	-	36492
Partitions	0 sqft	0	-	0
Ceiling	0 sqft	0	-	0
Lighting	2.00 W/sqft	19143	-	-
Equipment	0.00 W/sqft	0	-	-
People	160 people	28410	19200	-
Infiltration		0	0	0
Miscellaneous		0	0	-
Safety Factor	20/ 20/ 20 %	2716	3840	19418
>>Total Zone Loads (1)		16296	23040	116510
Zone Conditioning (2)		21187	23040	122136
Plenum Wall Load	0 %	0	-	-
Plenum Roof Load	0 %	0	-	-
Plenum Lighting Load	0 %	0	-	-
Return Fan Load		0	-	0
Ventilation Load	3000 CFM	-78625	-23040	214310
Supply Fan Load	3000 CFM	1112	-	-1112
Space Fan Coil Fans		0	-	0
Duct Heat Gain/Loss	0 %	0	-	0
>>Total System Loads		-56326	0	335334
Central Cooling Coil		0	0	0
Central Heating Coil		-90658	-	335334
Precool Coil		0	0	0
Preheat Coil		0	-	0
Central Reheat Coil		0	-	-
Humidification Load		0	0	-
Terminal Reheat Coils		0	-	0
Space/Skin Heat Coils		0	-	0
>>Total Conditioning		-90658	0	335334

Notes: (1) Zone loads calculated at occupied thermostat setpoint.
(2) Zone conditioning based on heat extraction analysis.
(3) In the COOLING column, positive loads indicate heat gains, while positive coil loads indicate system heat removal.

AIR SYSTEM SIZING SUMMARY

Air System.: BLDG 644, SECOND FLOOR HEATING 10-28-94
Weather....: Fort Devens, Massachusetts HAP v3.04a
Prepared By: NEW ENGLAND DIVISION Page 1 of 1

****

AIR SYSTEM INFORMATION

System Type.....: (CONVECT)
Number of Zones.....: 13
Floor Area.....: 5819 sqft

TERMINAL SYSTEM SIZING SUMMARY

Air System.: BLDG 644, SECOND FLOOR HEATING 10-28-94
Weather....: Fort Devens, Massachusetts HAP v3.04a
Prepared By: NEW ENGLAND DIVISION Page 1

****

TABLE 1: TERMINAL UNIT SIZING DATA

Zone Name	COOLING COIL Sens. (MBH)	COOLING COIL Total (MBH)	COOLING COIL Water (gpm)	HEATING COIL Load (MBH)	HEATING COIL Water (gpm)	Air Flow (CFM)
STORAGE 201 & 202.....	0.0	0.0	0.00	8.0	0.81	0
STORAGE 203.....	0.0	0.0	0.00	7.6	0.76	0
STORAGE 204.....	0.0	0.0	0.00	11.0	1.10	0
STO 205, 206, 207 & 208.	0.0	0.0	0.00	24.6	2.46	0
STORAGE 209.....	0.0	0.0	0.00	11.0	1.10	0
STORAGE 210.....	0.0	0.0	0.00	7.6	0.76	0
STORAGE 211 & 212.....	0.0	0.0	0.00	8.2	0.82	0
STORAGE 213.....	0.0	0.0	0.00	1.7	0.17	0
RESTROOM 216 & 227.....	0.0	0.0	0.00	28.2	2.82	0
STORAGE 218 & 225.....	0.0	0.0	0.00	6.3	0.63	0
CORRIDOR C21.....	0.0	0.0	0.00	1.2	0.12	0
CORRIDOR C22.....	0.0	0.0	0.00	1.2	0.12	0
STAIRS S21 & S22.....	0.0	0.0	0.00	4.9	0.49	0

AIR SYSTEM DESIGN LOAD SUMMARY

Air System.: BLDG 644, SECOND FLOOR HEATING
Weather....: Fort Devens, Massachusetts
Prepared By: NEW ENGLAND DIVISION

10-28-94
HAP v3.04a

****

COOLING AT.....: Jun @ 1500
COOLING OA DB/RH..: 86.0 F / 45 %

HEATING AT.....: Winter Design
HEATING OA DB...: 1.0 F

ZONE LOADS	Details	COOLING Sensible (BTU/hr)	COOLING Latent (BTU/hr)	HEATING Sensible (BTU/hr)
Solar Loads	816 sqft	26738	-	-
Wall Transmission	3268 sqft	25009	-	67385
Roof Transmission	0 sqft	0	-	0
Glass Transmission	816 sqft	5530	-	32980
Skylight Transmission	0 sqft	0	-	0
Door Transmission	40 sqft	139	-	828
Floor Transmission	0 sqft	0	-	0
Partitions	0 sqft	0	-	0
Ceiling	0 sqft	0	-	0
Lighting	2.00 W/sqft	32551	-	-
Equipment	0.00 W/sqft	0	-	-
People	0 people	0	0	-
Infiltration		0	0	0
Miscellaneous		0	0	-
Safety Factor	0/ 0/ 20 %	0	0	20239
>>Total Zone Loads (1)		89967	0	121432
Zone Conditioning (2)		89967	0	121432
Plenum Wall Load	0 %	0	-	-
Plenum Roof Load	0 %	0	-	-
Plenum Lighting Load	0 %	0	-	-
Return Fan Load		0	-	0
Ventilation Load	0 CFM	0	0	0
Supply Fan Load	0 CFM	0	-	0
Space Fan Coil Fans		0	-	0
Duct Heat Gain/Loss	0 %	0	-	0
>>Total System Loads		89967	0	121432
Terminal Unit Cooling		0	0	0
Terminal Unit Heating		0	-	121432
Precool Coil		0	0	0
Preheat Coil		0	-	0
Central Reheat Coil		0	-	-
Humidification Load		0	0	-
Terminal Reheat Coils		0	-	0
Space/Skin Heat Coils		0	-	0
>>Total Conditioning		0	0	121432

Notes: (1) Zone loads calculated at occupied thermostat setpoint.
(2) Zone conditioning based on heat extraction analysis.
(3) In the COOLING column, positive loads indicate heat gains, while positive coil loads indicate system heat removal.

AIR SYSTEM SIZING SUMMARY

Air System.: BLDG 644, SECOND FLOOR HTG & CLG 10-28-94
Weather....: Fort Devens, Massachusetts HAP v3.04a
Prepared By: NEW ENGLAND DIVISION

****

AIR SYSTEM INFORMATION

System Type.....: (2P-FC)
Number of Zones.....: 20
Floor Area.....: 8018 sqft

TERMINAL SYSTEM SIZING SUMMARY

Air System.: BLDG 644, SECOND FLOOR HTG & CLG 10-28-94
Weather....: Fort Devens, Massachusetts HAP v3.04a
Prepared By: NEW ENGLAND DIVISION

****

TABLE 1: TERMINAL UNIT SIZING DATA

Zone Name	COOLING COIL Sens. (MBH)	Total (MBH)	Water (gpm)	HEATING COIL Load (MBH)	Water (gpm)	Air Flow (CFM)
CLASSROOMS 219 & 220....	27.9	30.6	6.12	21.0	2.10	1021
LIBRARY 222.....	26.6	27.2	5.44	16.4	1.65	988
LEARNING CENTER 223.....	10.4	11.2	2.24	6.1	0.61	375
OFFICE 231.....	6.4	7.3	1.45	6.9	0.70	246
OFFICE 232.....	8.0	8.8	1.77	10.1	1.02	311
OFFICE 233.....	9.5	10.2	2.03	9.3	0.93	366
OFF 234, 236, 237 & 239.	29.3	31.8	6.37	19.5	1.95	1076
OFFICES 235 & 238.....	18.8	20.1	4.03	12.6	1.26	693
OFFICE 240.....	9.3	10.0	1.99	9.4	0.94	359
OFFICE 241.....	8.1	8.9	1.79	10.2	1.02	316
OFFICE 242.....	5.5	6.2	1.24	5.9	0.59	210
MAIL 244.....	6.2	6.7	1.34	4.1	0.41	233
COPIER FAX 245.....	7.4	7.8	1.55	4.3	0.43	276
ROOMS 246 & 249.....	33.5	35.5	7.11	18.7	1.87	1248
CLASSROOMS 247 & 248....	25.2	26.8	5.35	13.9	1.39	938
COMSEC TRAIN 250.....	12.5	13.3	2.66	7.2	0.72	468
TELEPHONE 251.....	1.2	1.3	0.27	1.2	0.12	45
CORRIDOR C26.....	3.0	3.9	0.77	2.0	0.20	111
CORRIDOR C27.....	3.0	3.8	0.77	2.0	0.20	110
CORRIDORS C23 & C25.....	8.3	11.0	2.19	3.4	0.34	294

AIR SYSTEM DESIGN LOAD SUMMARY

Air System.: BLDG 644, SECOND FLOOR HTG & CLG — 10-28-94
Weather....: Fort Devens, Massachusetts — HAP v3.04a
Prepared By: NEW ENGLAND DIVISION — Page 1 of 1

****

COOLING AT.....: Aug @ 1500 — HEATING AT.....: Winter Design
COOLING OA DB/RH..: 89.0 F / 44 % — HEATING OA DB...: 1.0 F

ZONE LOADS	Details	COOLING Sensible (BTU/hr)	COOLING Latent (BTU/hr)	HEATING Sensible (BTU/hr)
Solar Loads	1421 sqft	62914	-	-
Wall Transmission	3649 sqft	25700	-	75231
Roof Transmission	0 sqft	0	-	0
Glass Transmission	1421 sqft	7955	-	57362
Skylight Transmission	0 sqft	0	-	0
Door Transmission	80 sqft	230	-	1661
Floor Transmission	0 sqft	0	-	0
Partitions	110 sqft	1479	-	2148
Ceiling	0 sqft	0	-	0
Lighting	2.00 W/sqft	44848	-	-
Equipment	0.00 W/sqft	0	-	-
People	96 people	18309	19844	-
Infiltration		0	0	0
Miscellaneous		0	0	-
Safety Factor	20/ 20/ 20 %	32287	3969	27280
>>Total Zone Loads (1)		193723	23813	163682
Zone Conditioning (2)		247631	23813	185510
Plenum Wall Load	0 %	0	-	-
Plenum Roof Load	0 %	0	-	-
Plenum Lighting Load	0 %	0	-	-
Return Fan Load		0	-	0
Ventilation Load	0 CFM	0	0	0
Supply Fan Load	0 CFM	0	-	0
Space Fan Coil Fans		1789	-	-1001
Duct Heat Gain/Loss	0 %	0	-	0
>>Total System Loads		249420	23813	184509
Terminal Unit Cooling		249420	21742	0
Terminal Unit Heating		0	-	184509
Precool Coil		0	0	0
Preheat Coil		0	-	0
Central Reheat Coil		0	-	-
Humidification Load		0	0	-
Terminal Reheat Coils		0	-	0
Space/Skin Heat Coils		0	-	0
>>Total Conditioning		249420	21742	184509

Notes: (1) Zone loads calculated at occupied thermostat setpoint.
(2) Zone conditioning based on heat extraction analysis.
(3) In the COOLING column, positive loads indicate heat gains, while positive coil loads indicate system heat removal.

AIR SYSTEM SIZING SUMMARY

Air System.: BLDG 644, THIRD FLOOR HEATING 10-28-94
Weather....: Fort Devens, Massachusetts HAP v3.04a
Prepared By: NEW ENGLAND DIVISION

****

AIR SYSTEM INFORMATION

System Type.....: (CONVECT)
Number of Zones.....: 3
Floor Area.....: 1750 sqft

TERMINAL SYSTEM SIZING SUMMARY

Air System.: BLDG 644, THIRD FLOOR HEATING 10-28-94
Weather....: Fort Devens, Massachusetts HAP v3.04a
Prepared By: NEW ENGLAND DIVISION Page 1

****

TABLE 1: TERMINAL UNIT SIZING DATA

Zone Name	COOLING COIL Sens. (MBH)	COOLING COIL Total (MBH)	COOLING COIL Water (gpm)	HEATING COIL Load (MBH)	HEATING COIL Water (gpm)	Air Flow (CFM)
RESTROOM 316 & 323.....	0.0	0.0	0.00	40.6	4.06	0
STORAGE 318 & 321.....	0.0	0.0	0.00	9.2	0.92	0
STAIRS S31 & S32.....	0.0	0.0	0.00	7.3	0.73	0

AIR SYSTEM DESIGN LOAD SUMMARY

Air System.: BLDG 644, THIRD FLOOR HEATING — 10-28-94
Weather....: Fort Devens, Massachusetts — HAP v3.04a
Prepared By: NEW ENGLAND DIVISION — Page 1 of 1

****

COOLING AT.....: Jun @ 1500 — HEATING AT.....: Winter Design
COOLING OA DB/RH..: 86.0 F / 45 % — HEATING OA DB...: 1.0 F

ZONE LOADS	Details	COOLING Sensible (BTU/hr)	COOLING Latent (BTU/hr)	HEATING Sensible (BTU/hr)
Solar Loads	241 sqft	11757	-	-
Wall Transmission	1119 sqft	10145	-	23067
Roof Transmission	1845 sqft	7571	-	14744
Glass Transmission	241 sqft	1636	-	9758
Skylight Transmission	0 sqft	0	-	0
Door Transmission	0 sqft	0	-	0
Floor Transmission	0 sqft	0	-	0
Partitions	0 sqft	0	-	0
Ceiling	0 sqft	0	-	0
Lighting	2.00 W/sqft	9789	-	-
Equipment	0.00 W/sqft	0	-	-
People	0 people	0	0	-
Infiltration		0	0	0
Miscellaneous		0	0	-
Safety Factor	0/ 0/ 20 %	0	0	9514
>>Total Zone Loads (1)		40898	0	57083
Zone Conditioning (2)		40898	0	57083
Plenum Wall Load	0 %	0	-	-
Plenum Roof Load	0 %	0	-	-
Plenum Lighting Load	0 %	0	-	-
Return Fan Load		0	-	0
Ventilation Load	0 CFM	0	0	0
Supply Fan Load	0 CFM	0	-	0
Space Fan Coil Fans		0	-	0
Duct Heat Gain/Loss	0 %	0	-	0
>>Total System Loads		40898	0	57083
Terminal Unit Cooling		0	0	0
Terminal Unit Heating		0	-	57083
Precool Coil		0	0	0
Preheat Coil		0	-	0
Central Reheat Coil		0	-	-
Humidification Load		0	0	-
Terminal Reheat Coils		0	-	0
Space/Skin Heat Coils		0	-	0
>>Total Conditioning		0	0	57083

Notes: (1) Zone loads calculated at occupied thermostat setpoint.
(2) Zone conditioning based on heat extraction analysis.
(3) In the COOLING column, positive loads indicate heat gains, while positive coil loads indicate system heat removal.

AIR SYSTEM SIZING SUMMARY

Air System.: BLDG 644, THIRD FLOOR HTG & CLG 10-28-94
Weather....: Fort Devens, Massachusetts HAP v3.04a
Prepared By: NEW ENGLAND DIVISION Page 1 of 1

****

AIR SYSTEM INFORMATION

System Type.....: (2P-FC)
Number of Zones.....: 25
Floor Area.....: 11551 sqft

TERMINAL SYSTEM SIZING SUMMARY

Air System.: BLDG 644, THIRD FLOOR HTG & CLG
Weather....: Fort Devens, Massachusetts
Prepared By: NEW ENGLAND DIVISION

10-28-94
HAP v3.04a

****

TABLE 1: TERMINAL UNIT SIZING DATA

Zone Name	COOLING COIL Sens. (MBH)	Total (MBH)	Water (gpm)	HEATING COIL Load (MBH)	Water (gpm)	Air Flow (CFM)
OFFICES 301 & 302.....	14.1	14.5	2.91	12.0	1.21	530
OFFICE 303.....	8.4	8.4	1.68	9.5	0.95	331
OFFICE 304.....	11.6	12.2	2.44	14.9	1.49	448
OFF 305, 306, 307 & 308.	37.0	39.3	7.87	41.2	4.13	1399
OFFICE 309.....	11.4	12.0	2.40	14.8	1.49	441
OFFICE 310.....	9.0	9.0	1.81	9.6	0.96	351
OFFICES 311 & 312.....	14.7	15.3	3.06	12.6	1.26	550
OFFICE 313.....	6.5	6.9	1.38	4.9	0.49	231
OFFICES 319 & 320.....	23.3	24.1	4.83	18.6	1.86	787
OFFICE 326.....	5.2	5.6	1.13	4.5	0.45	188
OFFICES 327 & 328.....	9.8	10.3	2.07	12.3	1.23	378
OFFICE 329.....	6.6	6.9	1.37	9.5	0.95	259
OFFICE 330.....	14.5	15.1	3.03	15.2	1.52	557
OFF 331, 332, 333 & 334.	49.7	52.2	10.44	42.6	4.27	1858
OFFICE 335.....	14.3	14.7	2.95	15.2	1.52	551
OFFICE 336.....	6.5	6.8	1.36	9.3	0.93	263
OFFICES 337 & 338.....	9.5	10.0	2.01	11.9	1.20	367
OFFICE 340.....	15.4	15.5	3.10	11.6	1.16	583
OFFICES 341 & 344.....	34.4	34.4	6.88	25.3	2.53	1301
OFFICES 342 & 343.....	25.6	25.6	5.13	18.8	1.88	969
OFFICE 345.....	13.7	13.7	2.75	9.8	0.98	519
TELEPHONE 346.....	1.6	1.7	0.35	1.9	0.19	62
CORRIDOR C31 & C35.....	9.6	10.5	2.10	9.2	0.92	350
CORRIDOR C32 & C36.....	9.5	10.4	2.09	9.2	0.92	348
CORRIDOR C33 & C34.....	14.2	15.7	3.15	11.2	1.12	499

AIR SYSTEM DESIGN LOAD SUMMARY

Air System.: BLDG 644, THIRD FLOOR HTG & CLG — 10-28-94
Weather....: Fort Devens, Massachusetts — HAP v3.04a
Prepared By: NEW ENGLAND DIVISION —

****

COOLING AT.....: Jul @ 1500 — HEATING AT.....: Winter Design
COOLING OA DB/RH..: 89.0 F / 44 % — HEATING OA DB...: 1.0 F

ZONE LOADS	Details	COOLING Sensible (BTU/hr)	COOLING Latent (BTU/hr)	HEATING Sensible (BTU/hr)
Solar Loads	1646 sqft	64174	-	-
Wall Transmission	5584 sqft	37672	-	115143
Roof Transmission	11799 sqft	43246	-	94290
Glass Transmission	1646 sqft	9222	-	66492
Skylight Transmission	0 sqft	0	-	0
Door Transmission	80 sqft	230	-	1657
Floor Transmission	0 sqft	0	-	0
Partitions	0 sqft	0	-	0
Ceiling	0 sqft	0	-	0
Lighting	2.00 W/sqft	64613	-	-
Equipment	0.00 W/sqft	0	-	-
People	83 people	16039	17384	-
Infiltration		0	0	0
Miscellaneous		0	0	-
Safety Factor	20/ 20/ 20 %	47039	3477	55516
>>Total Zone Loads (1)		282235	20861	333098
Zone Conditioning (2)		361694	20861	357505
Plenum Wall Load	0 %	0	-	-
Plenum Roof Load	0 %	0	-	-
Plenum Lighting Load	0 %	0	-	-
Return Fan Load		0	-	0
Ventilation Load	0 CFM	0	0	0
Supply Fan Load	0 CFM	0	-	0
Space Fan Coil Fans		2609	-	-1710
Duct Heat Gain/Loss	0 %	0	-	0
>>Total System Loads		364303	20861	355795
Terminal Unit Cooling		364303	14062	0
Terminal Unit Heating		0	-	355795
Precool Coil		0	0	0
Preheat Coil		0	-	0
Central Reheat Coil		0	-	-
Humidification Load		0	0	-
Terminal Reheat Coils		0	-	0
Space/Skin Heat Coils		0	-	0
>>Total Conditioning		364303	14062	355795

Notes: (1) Zone loads calculated at occupied thermostat setpoint.
(2) Zone conditioning based on heat extraction analysis.
(3) In the COOLING column, positive loads indicate heat gains, while positive coil loads indicate system heat removal.

AIR SYSTEM SIZING SUMMARY

Air System.: BLDG 644-FIRST FLOOR (MAU 644-1) 11-02-94
Weather....: Fort Devens, Massachusetts HAP v3.04a
Prepared By: NEW ENGLAND DIVISION

****

AIR SYSTEM INFORMATION

System Type.....:	(TEMPER)
Number of Zones.....:	1
Floor Area.....:	0 sqft

PRECOOL COIL SIZING DATA

Total coil load (Tons)...:	1.0	Entering Db/Wb...:	89.0/ 72.0 F
Sensible coil load (Tons):	1.0	Leaving Db/Wb....:	75.0/ 67.9 F
Coil airflow (CFM).....:	840	Setpoint temp....:	75.0 F
Water gpm @ 10F rise.....:	2.52	Bypass factor....:	0.100

PREHEAT COIL SIZING DATA

Max coil load (BTU/hr)...:	61993	BTU/hr/sqft.....:	0.0
Coil airflow (CFM).....:	840	Water gpm @ 20F drop:	6.20
Setpoint temperature (F).:	70.0		

SUPPLY FAN SIZING DATA

Actual airflow (CFM).....:	840
Standard airflow (CFM)...:	832

VENTILATION AIR DATA

Airflow (CFM).....:	840	CFM/person.....:	0.00

AIR SYSTEM SIZING SUMMARY

Air System.: BLDG 644-FIRST FLOOR (MAU 644-2) 11-02-94
Weather....: Fort Devens, Massachusetts HAP v3.04a
Prepared By: NEW ENGLAND DIVISION Page 1 of 1

****

AIR SYSTEM INFORMATION

System Type.....: (TEMPER)
Number of Zones.....: 1
Floor Area.....: 0 sqft

PREHEAT COIL SIZING DATA

Max coil load (BTU/hr)...:	73801	BTU/hr/sqft.....:	0.0
Coil airflow (CFM).....:	1000	Water gpm @ 20F drop:	7.38
Setpoint temperature (F).:	70.0		

SUPPLY FAN SIZING DATA

Actual airflow (CFM).....:	1000
Standard airflow (CFM)...:	990

VENTILATION AIR DATA

Airflow (CFM).....:	1000	CFM/person.....:	0.00

AIR SYSTEM SIZING SUMMARY

Air System.: BLDG 644-SECOND FL (MAU 644-3) 11-02-94
Weather....: Fort Devens, Massachusetts HAP v3.04a
Prepared By: NEW ENGLAND DIVISION

****

AIR SYSTEM INFORMATION

System Type.....: (TEMPER)
Number of Zones.....: 1
Floor Area.....: 0 sqft

PRECOOL COIL SIZING DATA

Total coil load (Tons)...:	2.7	Entering Db/Wb...:	89.0/ 72.0 F
Sensible coil load (Tons):	2.7	Leaving Db/Wb....:	75.0/ 67.9 F
Coil airflow (CFM).....:	2130	Setpoint temp....:	75.0 F
Water gpm @ 10F rise.....:	6.38	Bypass factor....:	0.100

PREHEAT COIL SIZING DATA

Max coil load (BTU/hr)...:	157196	BTU/hr/sqft.....:	0.0
Coil airflow (CFM).....:	2130	Water gpm @ 20F drop:	15.73
Setpoint temperature (F).:	70.0		

SUPPLY FAN SIZING DATA

Actual airflow (CFM).....:	2130
Standard airflow (CFM)...:	2109

VENTILATION AIR DATA

Airflow (CFM).....:	2130	CFM/person.....:	0.00

AIR SYSTEM SIZING SUMMARY

Air System.: BLDG 644-SECOND FL (MAU 644-4) 11-02-94
Weather....: Fort Devens, Massachusetts HAP v3.04a
Prepared By: NEW ENGLAND DIVISION

****

AIR SYSTEM INFORMATION

System Type.....: (TEMPER)
Number of Zones.....: 1
Floor Area.....: 0 sqft

PRECOOL COIL SIZING DATA

Total coil load (Tons)...:	2.9	Entering Db/Wb...:	89.0/ 72.0 F
Sensible coil load (Tons):	2.9	Leaving Db/Wb....:	75.0/ 67.9 F
Coil airflow (CFM).....:	2355	Setpoint temp....:	75.0 F
Water gpm @ 10F rise.....:	7.06	Bypass factor....:	0.100

PREHEAT COIL SIZING DATA

Max coil load (BTU/hr)...:	173802	BTU/hr/sqft.....:	0.0
Coil airflow (CFM).....:	2355	Water gpm @ 20F drop:	17.39
Setpoint temperature (F).:	70.0		

SUPPLY FAN SIZING DATA

Actual airflow (CFM).....:	2355
Standard airflow (CFM)...:	2332

VENTILATION AIR DATA

Airflow (CFM).....:	2355	CFM/person.....:	0.00

AIR SYSTEM SIZING SUMMARY

Air System.: BLDG 644-FIRST FLOOR (MAU 644-5) 11-02-94
Weather....: Fort Devens, Massachusetts HAP v3.04a
Prepared By: NEW ENGLAND DIVISION

****

AIR SYSTEM INFORMATION

System Type.....: (TEMPER)
Number of Zones.....: 1
Floor Area.....: 0 sqft

PREHEAT COIL SIZING DATA

Max coil load (BTU/hr)...:	221403	BTU/hr/sqft.....:	0.0
Coil airflow (CFM).....:	3000	Water gpm @ 20F drop:	22.15
Setpoint temperature (F).:	70.0		

SUPPLY FAN SIZING DATA

Actual airflow (CFM).....:	3000
Standard airflow (CFM)...:	2971

VENTILATION AIR DATA

Airflow (CFM).....:	3000	CFM/person.....:	0.00

AIR SYSTEM SIZING SUMMARY

Air System.: BLDG 644-THIRD FLOOR (MAU 644-6) 11-02-94
Weather....: Fort Devens, Massachusetts HAP v3.04a
Prepared By: NEW ENGLAND DIVISION

****

AIR SYSTEM INFORMATION

System Type.....: (TEMPER)
Number of Zones.....: 1
Floor Area.....: 0 sqft

PRECOOL COIL SIZING DATA

Total coil load (Tons)...:	1.0	Entering Db/Wb...:	89.0/ 72.0 F
Sensible coil load (Tons):	1.0	Leaving Db/Wb....:	75.0/ 67.9 F
Coil airflow (CFM).....:	830	Setpoint temp....:	75.0 F
Water gpm @ 10F rise.....:	2.49	Bypass factor....:	0.100

PREHEAT COIL SIZING DATA

Max coil load (BTU/hr)...:	61255	BTU/hr/sqft.....:	0.0
Coil airflow (CFM).....:	830	Water gpm @ 20F drop:	6.13
Setpoint temperature (F).:	70.0		

SUPPLY FAN SIZING DATA

Actual airflow (CFM).....:	830
Standard airflow (CFM)...:	822

VENTILATION AIR DATA

Airflow (CFM).....:	830	CFM/person.....:	0.00

AIR SYSTEM SIZING SUMMARY

Air System.: BLDG 644-THIRD FLOOR (MAU 644-7) 11-02-94
Weather....: Fort Devens, Massachusetts HAP v3.04a
Prepared By: NEW ENGLAND DIVISION

****

AIR SYSTEM INFORMATION

System Type.....: (TEMPER)
Number of Zones.....: 1
Floor Area.....: 0 sqft

PRECOOL COIL SIZING DATA

Total coil load (Tons)...:	1.0	Entering Db/Wb...:	89.0/ 72.0 F
Sensible coil load (Tons):	1.0	Leaving Db/Wb....:	75.0/ 67.9 F
Coil airflow (CFM).....:	830	Setpoint temp....:	75.0 F
Water gpm @ 10F rise.....:	2.49	Bypass factor....:	0.100

PREHEAT COIL SIZING DATA

Max coil load (BTU/hr)...:	61255	BTU/hr/sqft.....:	0.0
Coil airflow (CFM).....:	830	Water gpm @ 20F drop:	6.13
Setpoint temperature (F).:	70.0		

SUPPLY FAN SIZING DATA

Actual airflow (CFM).....:	830
Standard airflow (CFM)...:	822

VENTILATION AIR DATA

Airflow (CFM).....:	830	CFM/person.....:	0.00

BUILDINGS 642 & 644

VALVE COEFFICIENT CALCULATIONS

LIQUID VALVE Cv CALCULATIONS

AHU 642-1 HEATING COIL

To prevent CAVITATION, there must be an upper limit on valve pressure drop.

The formula for this is: Pm = Km * (Pe - Pv)

Where:

Pm = maximum allowable valve pressure drop through the valve, psid

Km = valve pressure recovery coefficient <0.45>

Pe = absolute valve inlet pressure, psia

Pv = absolute vapor pressure of the liquid, psia

Enter Pe: 29.7
Enter Pv: 11.53

Pm = 8.2

Press Any Key To Continue

$$Cv = \frac{Q}{\text{SQRT } P / G)}$$

Where:

Q = design flow through valve in the full open position, gpm

P = pressure drop through the valve
P must be Less Than 8.2 psid Pm)

G = specific gravity of the liquid
(the specific gravity of water is 1)

Enter Q: 11.8
Enter G: 1
EnterP: 5

Cv = 5.3 You could use a Cv of 6 to 6
These Cv's correspond toP's of 3.9 to 3.9

Press C To Return To Liquid Cv Calculations, Or M to Return To Main Menu

LIQUID VALVE Cv CALCULATIONS

AHU 642-1 COOLING COIL

To prevent CAVITATION, there must be an upper limit on valve pressure drop.

The formula for this is: Pm = Km * (Pe - Pv)

Where:

Pm = maximum allowable valve pressure drop through the valve, psid

Km = valve pressure recovery coefficient <0.45>

Pe = absolute valve inlet pressure, psia

Pv = absolute vapor pressure of the liquid, psia

Enter Pe: 34.7
Enter Pv: .17

Pm = 15.5

Press Any Key To Continue

$$Cv = \frac{Q}{SQRT\ P\ /\ G)}$$

Where:

Q = design flow through valve in the full open position, gpm

P = pressure drop through the valve
P must be Less Than 15.5 psid Pm)

G = specific gravity of the liquid
(the specific gravity of water is 1)

Enter Q: 24
Enter G: 1
EnterP: 10

Cv = 7.6 You could use a Cv of 8 to 9
These Cv's correspond toP's of 9.0 to 7.1

Press C To Return To Liquid Cv Calculations, Or M to Return To Main Menu

LIQUID VALVE Cv CALCULATIONS

MAU 642-1 HEATING COIL

To prevent CAVITATION, there must be an upper limit on valve pressure drop.

The formula for this is: Pm = Km * (Pe - Pv)

Where:

Pm = maximum allowable valve pressure drop through the valve, psid

Km = valve pressure recovery coefficient <0.45>

Pe = absolute valve inlet pressure, psia

Pv = absolute vapor pressure of the liquid, psia

Enter Pe: 29.7
Enter Pv: 11.53

Pm = 8.2

Press Any Key To Continue

$$Cv = \frac{Q}{SQRT\ P\ /\ G)}$$

Where:

Q = design flow through valve in the full open position, gpm

P = pressure drop through the valve
P must be Less Than 8.2 psid Pm)

G = specific gravity of the liquid
(the specific gravity of water is 1)

Enter Q: 5.17
Enter G: 1
EnterP: 5

Cv = 2.3

Press C To Return To Liquid Cv Calculations, Or M to Return To Main Menu

LIQUID VALVE Cv CALCULATIONS

MAV 642-1 COOLING COIL

To prevent CAVITATION, there must be an upper limit on valve pressure drop.

The formula for this is: Pm = Km * (Pe - Pv)

Where:

Pm = maximum allowable valve pressure drop through the valve, psid

Km = valve pressure recovery coefficient <0.45>

Pe = absolute valve inlet pressure, psia

Pv = absolute vapor pressure of the liquid, psia

Enter Pe: 34.7
Enter Pv: .17

Pm = 15.5

Press Any Key To Continue

$$Cv = \frac{Q}{SQRT\ P\ /\ G)}$$

Where:

Q = design flow through valve in the full open position, gpm

P = pressure drop through the valve
P must be Less Than 15.5 psid Pm)

G = specific gravity of the liquid
(the specific gravity of water is 1)

Enter Q: 2.1
Enter G: 1
EnterP: 10

Cv = 0.7 USE C_V = 0.8

Press C To Return To Liquid Cv Calculations, Or M to Return To Main Menu

LIQUID VALVE Cv CALCULATIONS

MAU 642-2 HEATING COIL

To prevent CAVITATION, there must be an upper limit on valve pressure drop.

The formula for this is: Pm = Km * (Pe - Pv)

Where:

Pm = maximum allowable valve pressure drop through the valve, psid

Km = valve pressure recovery coefficient <0.45>

Pe = absolute valve inlet pressure, psia

Pv = absolute vapor pressure of the liquid, psia

Enter Pe: 29.7
Enter Pv: 11.53

Pm = 8.2

Press Any Key To Continue

$$Cv = \frac{Q}{SQRT\ P\ /\ G)}$$

Where:

Q = design flow through valve in the full open position, gpm

P = pressure drop through the valve
P must be Less Than 8.2 psid Pm)

G = specific gravity of the liquid
(the specific gravity of water is 1)

Enter Q: 4.87
Enter G: 1
EnterP: 5

Cv = 2.2

Press C To Return To Liquid Cv Calculations, Or M to Return To Main Menu

LIQUID VALVE Cv CALCULATIONS

MAU 642-1 COOLING COIL

To prevent CAVITATION, there must be an upper limit on valve pressure drop.

The formula for this is: Pm = Km * (Pe - Pv)

Where:

Pm = maximum allowable valve pressure drop through the valve, psid

Km = valve pressure recovery coefficient <0.45>

Pe = absolute valve inlet pressure, psia

Pv = absolute vapor pressure of the liquid, psia

Enter Pe: 34.7
Enter Pv: .17

Pm = 15.5

Press Any Key To Continue

$$Cv = \frac{Q}{SQRT\ P\ /\ G)}$$

Where:

Q = design flow through valve in the full open position, gpm

P = pressure drop through the valve
P must be Less Than 15.5 psid Pm)

G = specific gravity of the liquid
(the specific gravity of water is 1)

Enter Q: 1.98
Enter G: 1
EnterP: 10

Cv = 0.6

Press C To Return To Liquid Cv Calculations, Or M to Return To Main Menu

LIQUID VALVE Cv CALCULATIONS

MAU 642-3 HEATING COIL

To prevent CAVITATION, there must be an upper limit on valve pressure drop.

The formula for this is: Pm = Km * (Pe - Pv)

Where:

Pm = maximum allowable valve pressure drop through the valve, psid

Km = valve pressure recovery coefficient <0.45>

Pe = absolute valve inlet pressure, psia

Pv = absolute vapor pressure of the liquid, psia

Enter Pe: 29.7
Enter Pv: 11.53

Pm = 8.2

Press Any Key To Continue

$$Cv = \frac{Q}{\text{SQRT } P / G)}$$

Where:

Q = design flow through valve in the full open position, gpm

P = pressure drop through the valve
P must be Less Than 8.2 psid Pm)

G = specific gravity of the liquid
(the specific gravity of water is 1)

Enter Q: 5.69
Enter G: 1
EnterP: 5

Cv = 2.5

Press C To Return To Liquid Cv Calculations, Or M to Return To Main Menu

LIQUID VALVE Cv CALCULATIONS

MAU 642-3 COOLING COIL

To prevent CAVITATION, there must be an upper limit on valve pressure drop.

The formula for this is: Pm = Km * (Pe - Pv)

Where:

Pm = maximum allowable valve pressure drop through the valve, psid

Km = valve pressure recovery coefficient <0.45>

Pe = absolute valve inlet pressure, psia

Pv = absolute vapor pressure of the liquid, psia

Enter Pe: 34.7
Enter Pv: .17

Pm = 15.5

Press Any Key To Continue

$$Cv = \frac{Q}{SQRT\ P\ /\ G)}$$

Where:

Q = design flow through valve in the full open position, gpm

P = pressure drop through the valve
P must be Less Than 15.5 psid Pm)

G = specific gravity of the liquid
(the specific gravity of water is 1)

Enter Q: 2.31
Enter G: 1
EnterP: 10

Cv = 0.7

Press C To Return To Liquid Cv Calculations, Or M to Return To Main Menu

LIQUID VALVE Cv CALCULATIONS

MAU 642-4 HEATING COIL

To prevent CAVITATION, there must be an upper limit on valve pressure drop.

The formula for this is: Pm = Km * (Pe - Pv)

Where:

Pm = maximum allowable valve pressure drop through the valve, psid

Km = valve pressure recovery coefficient <0.45>

Pe = absolute valve inlet pressure, psia

Pv = absolute vapor pressure of the liquid, psia

Enter Pe: 29.7
Enter Pv: 11.53

Pm = 8.2

Press Any Key To Continue

$$Cv = \frac{Q}{SQRT\ P\ /\ G)}$$

Where:

Q = design flow through valve in the full open position, gpm

P = pressure drop through the valve
P must be Less Than 8.2 psid Pm)

G = specific gravity of the liquid
(the specific gravity of water is 1)

Enter Q: 7.09
Enter G: 1
EnterP: 5

Cv = 3.2

Press C To Return To Liquid Cv Calculations, Or M to Return To Main Menu

LIQUID VALVE Cv CALCULATIONS

MAU 642-4 COOLING COIL

To prevent CAVITATION, there must be an upper limit on valve pressure drop.

The formula for this is: Pm = Km * (Pe - Pv)

Where:

Pm = maximum allowable valve pressure drop through the valve, psid

Km = valve pressure recovery coefficient <0.45>

Pe = absolute valve inlet pressure, psia

Pv = absolute vapor pressure of the liquid, psia

Enter Pe: 34.7
Enter Pv: .17

Pm = 15.5

Press Any Key To Continue

$$Cv = \frac{Q}{\text{SQRT } P / G)}$$

Where:

Q = design flow through valve in the full open position, gpm

P = pressure drop through the valve
P must be Less Than 15.5 psid Pm)

G = specific gravity of the liquid
(the specific gravity of water is 1)

Enter Q: 2.88
Enter G: 1
EnterP: 10

Cv = 0.9

Press C To Return To Liquid Cv Calculations, Or M to Return To Main Menu

LIQUID VALVE Cv CALCULATIONS

MAV 642-5 HEATING COIL

To prevent CAVITATION, there must be an upper limit on valve pressure drop.

The formula for this is: Pm = Km * (Pe - Pv)

Where:

Pm = maximum allowable valve pressure drop through the valve, psid

Km = valve pressure recovery coefficient <0.45>

Pe = absolute valve inlet pressure, psia

Pv = absolute vapor pressure of the liquid, psia

Enter Pe: 29.7
Enter Pv: 11.53

Pm = 8.2

Press Any Key To Continue

$$Cv = \frac{Q}{SQRT\ P\ /\ G)}$$

Where:

Q = design flow through valve in the full open position, gpm

P = pressure drop through the valve
P must be Less Than 8.2 psid Pm)

G = specific gravity of the liquid
(the specific gravity of water is 1)

Enter Q: 7.38
Enter G: 1
EnterP: 5

Cv = 3.3

Press C To Return To Liquid Cv Calculations, Or M to Return To Main Menu

LIQUID VALVE Cv CALCULATIONS

MAU 642-6 HEATING COIL

To prevent CAVITATION, there must be an upper limit on valve pressure drop.

The formula for this is: Pm = Km * (Pe - Pv)

Where:

Pm = maximum allowable valve pressure drop through the valve, psid

Km = valve pressure recovery coefficient <0.45>

Pe = absolute valve inlet pressure, psia

Pv = absolute vapor pressure of the liquid, psia

Enter Pe: 29.7
Enter Pv: 11.53

Pm = 8.2

Press Any Key To Continue

$$Cv = \frac{Q}{\text{SQRT } P / G)}$$

Where:

Q = design flow through valve in the full open position, gpm

P = pressure drop through the valve
P must be Less Than 8.2 psid Pm)

G = specific gravity of the liquid
(the specific gravity of water is 1)

Enter Q: 6.42
Enter G: 1
EnterP: 5

Cv = 2.9

Press C To Return To Liquid Cv Calculations, Or M to Return To Main Menu

LIQUID VALVE Cv CALCULATIONS

MAU 642-6 COOLING COIL

To prevent CAVITATION, there must be an upper limit on valve pressure drop.

The formula for this is: Pm = Km * (Pe - Pv)

Where:

Pm = maximum allowable valve pressure drop through the valve, psid

Km = valve pressure recovery coefficient <0.45>

Pe = absolute valve inlet pressure, psia

Pv = absolute vapor pressure of the liquid, psia

Enter Pe: 34.7
Enter Pv: .17

Pm = 15.5

Press Any Key To Continue

$$Cv = \frac{Q}{SQRT\ P\ /\ G)}$$

Where:

Q = design flow through valve in the full open position, gpm

P = pressure drop through the valve
P must be Less Than 15.5 psid Pm)

G = specific gravity of the liquid
(the specific gravity of water is 1)

Enter Q: 2.61
Enter G: 1
EnterP: 10

Cv = 0.8

Press C To Return To Liquid Cv Calculations, Or M to Return To Main Menu

LIQUID VALVE Cv CALCULATIONS

MAU 642-7 HEATING COIL

To prevent CAVITATION, there must be an upper limit on valve pressure droo.

The formula for this is: Pm = Km * (Pe - Pv)

Where:

Pm = maximum allowable valve pressure drop through the valve, psid

Km = valve pressure recovery coefficient <0.45>

Pe = absolute valve inlet pressure, psia

Pv = absolute vapor pressure of the liquid, psia

Enter Pe: 29.7
Enter Pv: 11.53

Pm = 8.2

Press Any Key To Continue

$$Cv = \frac{Q}{SQRT\ P\ /\ G)}$$

Where:

Q = design flow through valve in the full open position, gpm

P = pressure drop through the valve
P must be Less Than 8.2 psid Pm)

G = specific gravity of the liquid
(the specific gravity of water is 1)

Enter Q: 6.42
Enter G: 1
EnterP: 5

Cv = 2.9

Press C To Return To Liquid Cv Calculations, Or M to Return To Main Menu

LIQUID VALVE Cv CALCULATIONS

MAU 642-7 COOLING COIL

To prevent CAVITATION, there must be an upper limit on valve pressure drop.

The formula for this is: Pm = Km * (Pe - Pv)

Where:

Pm = maximum allowable valve pressure drop through the valve, psid

Km = valve pressure recovery coefficient <0.45>

Pe = absolute valve inlet pressure, psia

Pv = absolute vapor pressure of the liquid, psia

Enter Pe: 34.7
Enter Pv: .17

Pm = 15.5

Press Any Key To Continue

$$Cv = \frac{Q}{\text{SQRT } P / G)}$$

Where:

Q = design flow through valve in the full open position, gpm

P = pressure drop through the valve
P must be Less Than 15.5 psid Pm)

G = specific gravity of the liquid
(the specific gravity of water is 1)

Enter Q: 2.61
Enter G: 1
EnterP: 10

Cv = 0.8

Press C To Return To Liquid Cv Calculations, Or M to Return To Main Menu

LIQUID VALVE Cv CALCULATIONS

MAU 644-1 HEATING COIL

To prevent CAVITATION, there must be an upper limit on valve pressure drop.

The formula for this is: Pm = Km * (Pe - Pv)

Where:

Pm = maximum allowable valve pressure drop through the valve, psid

Km = valve pressure recovery coefficient <0.45>

Pe = absolute valve inlet pressure, psia

Pv = absolute vapor pressure of the liquid, psia

Enter Pe: 29.7
Enter Pv: 11.53

Pm = 8.2

Press Any Key To Continue

$$Cv = \frac{Q}{SQRT\ P\ /\ G)}$$

Where:

Q = design flow through valve in the full open position, gpm

P = pressure drop through the valve
P must be Less Than 8.2 psid Pm)

G = specific gravity of the liquid
(the specific gravity of water is 1)

Enter Q: 6.2
Enter G: 1
EnterP: 5

Cv = 2.8

Press C To Return To Liquid Cv Calculations, Or M to Return To Main Menu

LIQUID VALVE Cv CALCULATIONS

MAU 644-1 COOLING COIL

To prevent CAVITATION, there must be an upper limit on valve pressure drop.

The formula for this is: Pm = Km * (Pe - Pv)

Where:

Pm = maximum allowable valve pressure drop through the valve, psid

Km = valve pressure recovery coefficient <0.45>

Pe = absolute valve inlet pressure, psia

Pv = absolute vapor pressure of the liquid, psia

Enter Pe: 34.7
Enter Pv: .17

Pm = 15.5

Press Any Key To Continue

$$Cv = \frac{Q}{SQRT\ P\ /\ G)}$$

Where:

Q = design flow through valve in the full open position, gpm

P = pressure drop through the valve
P must be Less Than 15.5 psid Pm)

G = specific gravity of the liquid
(the specific gravity of water is 1)

Enter Q: 2.52
Enter G: 1
EnterP: 10

Cv = 0.8

Press C To Return To Liquid Cv Calculations, Or M to Return To Main Menu

LIQUID VALVE Cv CALCULATIONS

MAU 644-2 HEATING COIL

To prevent CAVITATION, there must be an upper limit on valve pressure drop.

The formula for this is: Pm = Km * (Pe - Pv)

Where:

Pm = maximum allowable valve pressure drop through the valve, psid

Km = valve pressure recovery coefficient <0.45>

Pe = absolute valve inlet pressure, psia

Pv = absolute vapor pressure of the liquid, psia

Enter Pe: 29.7
Enter Pv: 11.53

Pm = 8.2

Press Any Key To Continue

$$Cv = \frac{Q}{SQRT\ P\ /\ G)}$$

Where:

Q = design flow through valve in the full open position, gpm

P = pressure drop through the valve
P must be Less Than 8.2 psid Pm)

G = specific gravity of the liquid
(the specific gravity of water is 1)

Enter Q: 7.38
Enter G: 1
EnterP: 5

Cv = 3.3

Press C To Return To Liquid Cv Calculations, Or M to Return To Main Menu

LIQUID VALVE Cv CALCULATIONS

MAU 644-3 HEATING COIL

To prevent CAVITATION, there must be an upper limit on valve pressure drop.

The formula for this is: Pm = Km * (Pe - Pv)

Where:

Pm = maximum allowable valve pressure drop through the valve, psid

Km = valve pressure recovery coefficient <0.45>

Pe = absolute valve inlet pressure, psia

Pv = absolute vapor pressure of the liquid, psia

Enter Pe: 29.7
Enter Pv: 11.53

Pm = 8.2

Press Any Key To Continue

$$Cv = \frac{Q}{SQRT\ P\ /\ G)}$$

Where:

Q = design flow through valve in the full open position, gpm

P = pressure drop through the valve
P must be Less Than 8.2 psid Pm)

G = specific gravity of the liquid
(the specific gravity of water is 1)

Enter Q: 15.73
Enter G: 1
EnterP: 5

Cv = 7.0 You could use a Cv of 8 to 8
These Cv's correspond toP's of 3.9 to 3.9

Press C To Return To Liquid Cv Calculations, Or M to Return To Main Menu

LIQUID VALVE Cv CALCULATIONS

MAV 644-3 COOLING COIL

To prevent CAVITATION, there must be an upper limit on valve pressure drop.

The formula for this is: Pm = Km * (Pe - Pv)

Where:

Pm = maximum allowable valve pressure drop through the valve, psid

Km = valve pressure recovery coefficient <0.45>

Pe = absolute valve inlet pressure, psia

Pv = absolute vapor pressure of the liquid, psia

Enter Pe: 34.7
Enter Pv: .17

Pm = 15.5

Press Any Key To Continue

$$Cv = \frac{Q}{SQRT\ P\ /\ G)}$$

Where:

Q = design flow through valve in the full open position, gpm

P = pressure drop through the valve
P must be Less Than 15.5 psid Pm)

G = specific gravity of the liquid
(the specific gravity of water is 1)

Enter Q: 6.38
Enter G: 1
EnterP: 10

Cv = 2.0

Press C To Return To Liquid Cv Calculations, Or M to Return To Main Menu

LIQUID VALVE Cv CALCULATIONS

MAU 644-4 HEATING COIL

To prevent CAVITATION, there must be an upper limit on valve pressure drop.

The formula for this is: Pm = Km * (Pe - Pv)

Where:

Pm = maximum allowable valve pressure drop through the valve, psid

Km = valve pressure recovery coefficient <0.45>

Pe = absolute valve inlet pressure, psia

Pv = absolute vapor pressure of the liquid, psia

Enter Pe: 29.7
Enter Pv: 11.53

Pm = 8.2

Press Any Key To Continue

$$Cv = \frac{Q}{SQRT\ P\ /\ G)}$$

Where:

Q = design flow through valve in the full open position, gpm

P = pressure drop through the valve
P must be Less Than 8.2 psid Pm)

G = specific gravity of the liquid
(the specific gravity of water is 1)

Enter Q: 17.39
Enter G: 1
EnterP: 5

Cv = 7.8 You could use a Cv of 8 to 9
These Cv's correspond toP's of 4.7 to 3.7

Press C To Return To Liquid Cv Calculations, Or M to Return To Main Menu

LIQUID VALVE Cv CALCULATIONS

MAU 644-4 COOLING COIL

To prevent CAVITATION, there must be an upper limit on valve pressure drop.

The formula for this is: Pm = Km * (Pe - Pv)

Where:

Pm = maximum allowable valve pressure drop through the valve, psid

Km = valve pressure recovery coefficient <0.45>

Pe = absolute valve inlet pressure, psia

Pv = absolute vapor pressure of the liquid, psia

Enter Pe: 34.7
Enter Pv: .17

Pm = 15.5

Press Any Key To Continue

$$Cv = \frac{Q}{\text{SQRT } P / G)}$$

Where:

Q = design flow through valve in the full open position, gpm

P = pressure drop through the valve
P must be Less Than 15.5 psid Pm)

G = specific gravity of the liquid
(the specific gravity of water is 1)

Enter Q: 7.06
Enter G: 1
EnterP: 10

Cv = 2.2

Press C To Return To Liquid Cv Calculations, Or M to Return To Main Menu

LIQUID VALVE Cv CALCULATIONS

MAU 644-5 HEATING COIL

To prevent CAVITATION, there must be an upper limit on valve pressure drop.

The formula for this is: Pm = Km * (Pe - Pv)

Where:

Pm = maximum allowable valve pressure drop through the valve, psid

Km = valve pressure recovery coefficient <0.45>

Pe = absolute valve inlet pressure, psia

Pv = absolute vapor pressure of the liquid, psia

Enter Pe: 29.7
Enter Pv: 11.53

Pm = 8.2

Press Any Key To Continue

$$Cv = \frac{Q}{SQRT\ P\ /\ G)}$$

Where:

Q = design flow through valve in the full open position, gpm

P = pressure drop through the valve
P must be Less Than 8.2 psid Pm)

G = specific gravity of the liquid
(the specific gravity of water is 1)

Enter Q: 22.15
Enter G: 1
EnterP: 5

Cv = 9.9 You could use a Cv of 10 to 12
These Cv's correspond toP's of 4.9 to 3.4

Press C To Return To Liquid Cv Calculations, Or M to Return To Main Menu

LIQUID VALVE Cv CALCULATIONS

MAU 644-6 HEATING COIL

To prevent CAVITATION, there must be an upper limit on valve pressure drop.

The formula for this is: Pm = Km * (Pe - Pv)

Where:

Pm = maximum allowable valve pressure drop through the valve, psid

Km = valve pressure recovery coefficient <0.45>

Pe = absolute valve inlet pressure, psia

Pv = absolute vapor pressure of the liquid, psia

Enter Pe: 29.7
Enter Pv: 11.53

Pm = 8.2

Press Any Key To Continue

$$Cv = \frac{Q}{\text{SQRT } P / G)}$$

Where:

Q = design flow through valve in the full open position, gpm

P = pressure drop through the valve
P must be Less Than 8.2 psid Pm)

G = specific gravity of the liquid
(the specific gravity of water is 1)

Enter Q: 6.13
Enter G: 1
EnterP: 5

Cv = 2.7

Press C To Return To Liquid Cv Calculations, Or M to Return To Main Menu

LIQUID VALVE Cv CALCULATIONS

MAU 644-6 COOLING COIL

To prevent CAVITATION, there must be an upper limit on valve pressure drop.

The formula for this is: Pm = Km * (Pe - Pv)

Where:

Pm = maximum allowable valve pressure drop through the valve, psid

Km = valve pressure recovery coefficient <0.45>

Pe = absolute valve inlet pressure, psia

Pv = absolute vapor pressure of the liquid, psia

Enter Pe: 34.7
Enter Pv: .17

Pm = 15.5

Press Any Key To Continue

$$Cv = \frac{Q}{SQRT\ P\ /\ G)}$$

Where:

Q = design flow through valve in the full open position, gpm

P = pressure drop through the valve
P must be Less Than 15.5 psid Pm)

G = specific gravity of the liquid
(the specific gravity of water is 1)

Enter Q: 2.49
Enter G: 1
EnterP: 10

Cv = 0.8

Press C To Return To Liquid Cv Calculations, Or M to Return To Main Menu

LIQUID VALVE Cv CALCULATIONS

MAU 644-7 HEATING COIL

To prevent CAVITATION, there must be an upper limit on valve pressure drop.

The formula for this is: Pm = Km * (Pe - Pv)

Where:

Pm = maximum allowable valve pressure drop through the valve, psid

Km = valve pressure recovery coefficient <0.45>

Pe = absolute valve inlet pressure, psia

Pv = absolute vapor pressure of the liquid, psia

Enter Pe: 29.7
Enter Pv: 11.53

Pm = 8.2

Press Any Key To Continue

$$Cv = \frac{Q}{SQRT\ P\ /\ G)}$$

Where:

Q = design flow through valve in the full open position, gpm

P = pressure drop through the valve
P must be Less Than 8.2 psid Pm)

G = specific gravity of the liquid
(the specific gravity of water is 1)

Enter Q: 6.13
Enter G: 1
EnterP: 5

Cv = 2.7

Press C To Return To Liquid Cv Calculations, Or M to Return To Main Menu

LIQUID VALVE Cv CALCULATIONS

MAU 644-7 COOLING COIL

To prevent CAVITATION, there must be an upper limit on valve pressure drop.

The formula for this is: Pm = Km * (Pe - Pv)

Where:

Pm = maximum allowable valve pressure drop through the valve, psid

Km = valve pressure recovery coefficient <0.45>

Pe = absolute valve inlet pressure, psia

Pv = absolute vapor pressure of the liquid, psia

Enter Pe: 34.7
Enter Pv: .17

Pm = 15.5

Press Any Key To Continue

$$Cv = \frac{Q}{SQRT\ P\ /\ G)}$$

Where:

Q = design flow through valve in the full open position, gpm

P = pressure drop through the valve
P must be Less Than 15.5 psid Pm)

G = specific gravity of the liquid
(the specific gravity of water is 1)

Enter Q: 2.49
Enter G: 1
EnterP: 10

Cv = 0.8

Press C To Return To Liquid Cv Calculations, Or M to Return To Main Menu

BUILDINGS 642 & 644

AIR HANDLING UNIT SELECTIONS

==========
TRANE MODULAR CLIMATE CHANGER SELECTION PROGRAM
==========

Version 12.12
11/30/94
14:50:36

For exclusive use by: C.D.S. SUPPORT GROUP

Project
Location
Owner
User
Comment

OUTPUT DATA
****

UNIT TAG	UNIT SIZE	CFM	TOTAL SP	EXTERNAL SP	ADDITIONAL SP
AHU-1	6	2560	2.36	1.50	0.00

FAN MODULE	FAN SIZE	FAN TYPE	FAN IGV	FAN DISC.	FAN DISC.	FAN DISC.	FAN RPM	FAN BHP	FAN HP
H	10B	FC	N	FTTP			1557	1.70	2.0

COIL TYP	T	ROW	FIN TYP	FPF	EAT/ EDB	EWB	LAT/ LDB	LWB	EWT	PSI	DT H2O	#/HR GPM	SENS MBH	TOTAL MBH	APD	SPD WPD
2 UW	N	2	TF	76	50		100		190		20	13.9		138.8	.11	.57
3 UW	N	6	TF	112	81	69	55	54.7	42		10	23.3	73.6	116.4	.58	2.47

Pos	Module Type	Width	Height	Length	Weight	Face Area / Vel	SP
1	Mix Box With Filter	44.00 x	27.25 x	27.25	194	8.90 288	0.17
2	Small Coil	44.00 x	27.25 x	11.00	129	5.86 437	0.11
3	Medium Coil	44.00 x	27.25 x	15.50	216	5.86 437	0.58
4	FC Fan	44.00 x	27.25 x	41.00	285	1.41 1816	0.00
		=====	======	======	======		
		44.00	27.25	94.75	824		

SOUND POWER BY OCTAVE BANDS RE 10-12 WATTS
****

COMPONENT	1	2	3	4	5	6	7	8
DISCHARGE	88	85	83	76	78	76	74	67
INLET+CABINET	82	79	66	56	54	51	44	43

DIAGNOSTIC MESSAGES:

UNIT WEIGHT IS FOR SINGLE WALL CONSTRUCTED UNITS AND DOES NOT INCLUDE DRIVE, FILTER OR BASE RAIL WEIGHTS. FAN WEIGHTS INCLUDE THE WEIGHT OF AN OPEN DRIP PROOF MOTOR BASED ON MOTOR HP.
COIL MODULE WEIGHTS FOR CHILLED WATER AND HOT WATER COILS INCLUDE MODULE AND COIL WITH WATER. REFRIGERANT AND STEAM COIL MODULE WEIGHT IS FOR MODULE ONLY AND DOES NOT INCLUDE COIL. REFER TO PAGES 112-116 OF CLCH-D-7 FOR COMPLETE WEIGHT CHARTS

DIMENSIONS DO NOT INCLUDE BASE RAIL OR MOUNTING LEGS.

==========
TRANE MODULAR CLIMATE CHANGER SELECTION PROGRAM
==========

Version 12.12
11/30/94
14:00:01

For exclusive use by: C.D.S. SUPPORT GROUP

Project FT DEVONS - US ARMY CORP OF ENGS
Location RENOVATE BLDGS 642 & 644
Owner KEN PATTON
User
Comment

OUTPUT DATA
****

UNIT TAG	UNIT SIZE	CFM	TOTAL SP	EXTERNAL SP	ADDITIONAL SP
642-1	3	700	0.99	0.75	0.00

FAN MODULE	FAN SIZE	FAN TYPE	FAN IGV	FAN DISC.	FAN DISC.	FAN DISC.	FAN RPM	FAN BHP	FAN HP
H	9B	FC	N	FTTP			1109	0.24	1.0

COIL TYP	T	ROW	FIN TYP	FPF	EAT/ EDB	EWB	LAT/ LDB	LWB	EWT	PSI	DT H2O	#/HR GPM	SENS MBH	TOTAL MBH	APD	SPD WPD
2 UW	N	2	TF	72	1		85.5		190		20	6.4		64.2	.03	.17
3 UW	Y	8	TF	72	89.4	72	49.1	48.9	42		10	10.1	31.2	50.3	.2	1.45

Pos	Module Type	Width	Height	Length	Weight	Face Area / Vel	SP
1	Angled Filter	31.00 x	24.75 x	24.75	103	5.60 125	0.01
2	Small Coil	31.00 x	24.75 x	11.00	98	3.32 211	0.03
3	Medium Coil	31.00 x	24.75 x	15.50	167	3.32 211	0.20
4	FC Fan	31.00 x	24.75 x	36.00	193	0.65 1077	0.00
		=====	======	======	======		
		31.00	24.75	87.25	561		

SOUND POWER BY OCTAVE BANDS RE 10-12 WATTS
****

COMPONENT	1	2	3	4	5	6	7	8
DISCHARGE	82	78	71	64	63	61	59	57
INLET+CABINET	76	66	59	53	53	49	43	32

DIAGNOSTIC MESSAGES:

UNIT WEIGHT IS FOR SINGLE WALL CONSTRUCTED UNITS AND DOES NOT INCLUDE DRIVE, FILTER OR BASE RAIL WEIGHTS. FAN WEIGHTS INCLUDE THE WEIGHT OF AN OPEN DRIP PROOF MOTOR BASED ON MOTOR HP.
COIL MODULE WEIGHTS FOR CHILLED WATER AND HOT WATER COILS INCLUDE MODULE AND COIL WITH WATER. REFRIGERANT AND STEAM COIL MODULE WEIGHT IS FOR MODULE ONLY AND DOES NOT INCLUDE COIL. REFER TO PAGES 112-116 OF CLCH-D-7 FOR COMPLETE WEIGHT CHARTS

DIMENSIONS DO NOT INCLUDE BASE RAIL OR MOUNTING LEGS.

==========
TRANE MODULAR CLIMATE CHANGER SELECTION PROGRAM
==========

Version 12.12
11/30/94
14:00:08

For exclusive use by: C.D.S. SUPPORT GROUP

Project FT DEVONS - US ARMY CORP OF ENGS
Location RENOVATE BLDGS 642 & 644
Owner KEN PATTON
User
Comment

OUTPUT DATA
****

UNIT TAG	UNIT SIZE	CFM	TOTAL SP	EXTERNAL SP	ADDITIONAL SP
642-2	3	700	0.99	0.75	0.00

FAN MODULE	FAN SIZE	FAN TYPE	FAN IGV	FAN DISC.	FAN DISC.	FAN DISC.	FAN RPM	FAN BHP	FAN HP
H	9B	FC	N	FTTP			1109	0.24	1.0

COIL TYP	T	ROW	FIN TYP	FPF	EAT/ EDB	EWB	LAT/ LDB	LWB	EWT	PSI	DT H2O	#/HR GPM	SENS MBH	TOTAL MBH	APD	SPD WPD
2 UW	N	2	TF	72	1		85.5		190		20	6.4		64.2	.03	.17
3 UW	Y	8	TF	72	89.4	72	49.1	48.9	42		10	10.1	31.2	50.3	.2	1.45

Pos	Module Type	Width		Height		Length	Weight	Face Area /	Vel	SP
1	Angled Filter	31.00	x	24.75	x	24.75	103	5.60	125	0.01
2	Small Coil	31.00	x	24.75	x	11.00	98	3.32	211	0.03
3	Medium Coil	31.00	x	24.75	x	15.50	167	3.32	211	0.20
4	FC Fan	31.00	x	24.75	x	36.00	193	0.65	1077	0.00
		=====		======		======	======			
		31.00		24.75		87.25	561			

SOUND POWER BY OCTAVE BANDS RE 10-12 WATTS
****

COMPONENT	1	2	3	4	5	6	7	8
DISCHARGE	82	78	71	64	63	61	59	57
INLET+CABINET	76	66	59	53	53	49	43	32

DIAGNOSTIC MESSAGES:

UNIT WEIGHT IS FOR SINGLE WALL CONSTRUCTED UNITS AND DOES NOT INCLUDE DRIVE, FILTER OR BASE RAIL WEIGHTS. FAN WEIGHTS INCLUDE THE WEIGHT OF AN OPEN DRIP PROOF MOTOR BASED ON MOTOR HP.
COIL MODULE WEIGHTS FOR CHILLED WATER AND HOT WATER COILS INCLUDE MODULE AND COIL WITH WATER. REFRIGERANT AND STEAM COIL MODULE WEIGHT IS FOR MODULE ONLY AND DOES NOT INCLUDE COIL. REFER TO PAGES 112-116 OF CLCH-D-7 FOR COMPLETE WEIGHT CHARTS

DIMENSIONS DO NOT INCLUDE BASE RAIL OR MOUNTING LEGS.

==========
TRANE MODULAR CLIMATE CHANGER SELECTION PROGRAM
==========

Version 12.12
11/30/94
14:00:14

For exclusive use by: C.D.S. SUPPORT GROUP

Project FT DEVONS - US ARMY CORP OF ENGS
Location RENOVATE BLDGS 642 & 644
Owner KEN PATTON
User
Comment

OUTPUT DATA
****

UNIT TAG	UNIT SIZE	CFM	TOTAL SP	EXTERNAL SP	ADDITIONAL SP
642-3	3	770	0.93	0.75	0.00

FAN MODULE	FAN SIZE	FAN TYPE	FAN IGV	FAN DISC.	FAN DISC.	FAN DISC.	FAN RPM	FAN BHP	FAN HP
H	9B	FC	N	FTTP			1076	0.25	1.0

COIL TYP	T	ROW	FIN TYP	FPF	EAT/ EDB	EWB	LAT/ LDB	LWB	EWT	PSI	DT H2O	#/HR GPM	SENS MBH	TOTAL MBH	APD	SPD WPD
2 UW	N	2	TF	72	1		83		190		20	6.8		68.5	.04	.19
3 UW	Y	4	TF	72	89.4	72	60.5	58.1	42		10	7.3	24.7	36.3	.12	.69

Pos	Module Type	Width	Height	Length	Weight	Face Area /	Vel	SP
1	Angled Filter	31.00 x	24.75 x	24.75	103	5.60	138	0.02
2	Small Coil	31.00 x	24.75 x	11.00	98	3.32	232	0.04
3	Medium Coil	31.00 x	24.75 x	15.50	133	3.32	232	0.12
4	FC Fan	31.00 x	24.75 x	36.00	193	0.65	1185	0.00
		=====	======	======	======			
		31.00	24.75	87.25	527			

SOUND POWER BY OCTAVE BANDS RE 10-12 WATTS
****

COMPONENT	1	2	3	4	5	6	7	8
DISCHARGE	81	77	71	64	63	61	59	57
INLET+CABINET	76	66	59	52	53	50	45	37

DIAGNOSTIC MESSAGES:

UNIT WEIGHT IS FOR SINGLE WALL CONSTRUCTED UNITS AND DOES NOT INCLUDE DRIVE, FILTER OR BASE RAIL WEIGHTS. FAN WEIGHTS INCLUDE THE WEIGHT OF AN OPEN DRIP PROOF MOTOR BASED ON MOTOR HP.
COIL MODULE WEIGHTS FOR CHILLED WATER AND HOT WATER COILS INCLUDE MODULE AND COIL WITH WATER. REFRIGERANT AND STEAM COIL MODULE WEIGHT IS FOR MODULE ONLY AND DOES NOT INCLUDE COIL. REFER TO PAGES 112-116 OF CLCH-D-7 FOR COMPLETE WEIGHT CHARTS

DIMENSIONS DO NOT INCLUDE BASE RAIL OR MOUNTING LEGS.

==========
TRANE MODULAR CLIMATE CHANGER SELECTION PROGRAM
==========

Version 12.12
11/30/94
14:00:19

For exclusive use by: C.D.S. SUPPORT GROUP

Project FT DEVONS - US ARMY CORP OF ENGS
Location RENOVATE BLDGS 642 & 644
Owner KEN PATTON
User
Comment

OUTPUT DATA
****

UNIT TAG	UNIT SIZE	CFM	TOTAL SP	EXTERNAL SP	ADDITIONAL SP
642-4	3	960	1.25	1.00	0.00

FAN MODULE	FAN SIZE	FAN TYPE	FAN IGV	FAN DISC.	FAN DISC.	FAN DISC.	FAN RPM	FAN BHP	FAN HP
H	9B	FC	N	FTTP			1255	0.43	1.0

COIL TYP	T	ROW	FIN TYP	FPF	EAT/ EDB	EWB	LAT/ LDB	LWB	EWT	PSI	DT H2O	#/HR GPM	SENS MBH	TOTAL MBH	APD	SPD WPD
2 UW	N	2	TF	72	1		77.2		190		20	7.9		79.3	.05	.24
3 UW	Y	4	TF	72	89.4	72	62.3	59.5	42		10	8.3	28.8	41.3	.17	.79

Pos	Module Type	Width	Height	Length	Weight	Face Area /	Vel	SP
1	Angled Filter	31.00 x	24.75 x	24.75	103	5.60	171	0.03
2	Small Coil	31.00 x	24.75 x	11.00	98	3.32	289	0.05
3	Medium Coil	31.00 x	24.75 x	15.50	133	3.32	289	0.17
4	FC Fan	31.00 x	24.75 x	36.00	193	0.65	1477	0.00
		=====	======	======	======			
		31.00	24.75	87.25	527			

SOUND POWER BY OCTAVE BANDS RE 10-12 WATTS
****

COMPONENT	1	2	3	4	5	6	7	8
DISCHARGE	85	81	75	69	68	67	65	63
INLET+CABINET	80	70	62	57	58	55	50	42

DIAGNOSTIC MESSAGES:

UNIT WEIGHT IS FOR SINGLE WALL CONSTRUCTED UNITS AND DOES NOT INCLUDE DRIVE, FILTER OR BASE RAIL WEIGHTS. FAN WEIGHTS INCLUDE THE WEIGHT OF AN OPEN DRIP PROOF MOTOR BASED ON MOTOR HP.
COIL MODULE WEIGHTS FOR CHILLED WATER AND HOT WATER COILS INCLUDE MODULE AND COIL WITH WATER. REFRIGERANT AND STEAM COIL MODULE WEIGHT IS FOR MODULE ONLY AND DOES NOT INCLUDE COIL. REFER TO PAGES 112-116 OF CLCH-D-7 FOR COMPLETE WEIGHT CHARTS

DIMENSIONS DO NOT INCLUDE BASE RAIL OR MOUNTING LEGS.

==========
TRANE MODULAR CLIMATE CHANGER SELECTION PROGRAM
==========

Version 12.12
11/30/94
14:00:25

For exclusive use by: C.D.S. SUPPORT GROUP

Project FT DEVONS - US ARMY CORP OF ENGS
Location RENOVATE BLDGS 642 & 644
Owner KEN PATTON
User
Comment

OUTPUT DATA
****

UNIT TAG	UNIT SIZE	CFM	TOTAL SP	EXTERNAL SP	ADDITIONAL SP
642-5	3	1000	1.03	0.75	0.00

FAN MODULE	FAN SIZE	FAN TYPE	FAN IGV	FAN DISC.	FAN DISC.	FAN DISC.	FAN RPM	FAN BHP	FAN HP
H	9B	FC	N	FTTP			1158	0.39	1.0

COIL TYP	T	ROW	FIN TYP	FPF	EAT/ EDB	EWB	LAT/ LDB	LWB	EWT	PSI	DT H2O	#/HR GPM	SENS MBH	TOTAL MBH	APD	SPD WPD
2 UW	N	2	TF	72	1		76		190		20	8.1		81.4	.06	.25
3 UW	Y	4	TF	72	89.4	72	62.6	59.7	42		10	8.5	29.7	42.3	.19	.81

Pos	Module Type	Width	Height	Length	Weight	Face Area /	Vel	SP
1	Angled Filter	31.00 x	24.75 x	24.75	103	5.60	179	0.03
2	Small Coil	31.00 x	24.75 x	11.00	98	3.32	301	0.06
3	Medium Coil	31.00 x	24.75 x	15.50	133	3.32	301	0.19
4	FC Fan	31.00 x	24.75 x	36.00	193	0.65	1538	0.00
		=====	======	======	======			
		31.00	24.75	87.25	527			

SOUND POWER BY OCTAVE BANDS RE 10-12 WATTS
****

COMPONENT	1	2	3	4	5	6	7	8
DISCHARGE	83	79	74	67	67	66	64	62
INLET+CABINET	78	68	61	55	56	53	49	41

DIAGNOSTIC MESSAGES:

UNIT WEIGHT IS FOR SINGLE WALL CONSTRUCTED UNITS AND DOES NOT INCLUDE DRIVE, FILTER OR BASE RAIL WEIGHTS. FAN WEIGHTS INCLUDE THE WEIGHT OF AN OPEN DRIP PROOF MOTOR BASED ON MOTOR HP.
COIL MODULE WEIGHTS FOR CHILLED WATER AND HOT WATER COILS INCLUDE MODULE AND COIL WITH WATER. REFRIGERANT AND STEAM COIL MODULE WEIGHT IS FOR MODULE ONLY AND DOES NOT INCLUDE COIL. REFER TO PAGES 112-116 OF CLCH-D-7 FOR COMPLETE WEIGHT CHARTS

DIMENSIONS DO NOT INCLUDE BASE RAIL OR MOUNTING LEGS.

```
==================================================          Version 12.12
TRANE MODULAR CLIMATE CHANGER SELECTION PROGRAM             11/30/94
==================================================          14:00:30
```

For exclusive use by: C.D.S. SUPPORT GROUP

Project FT DEVONS - US ARMY CORP OF ENGS
Location RENOVATE BLDGS 642 & 644
Owner   KEN PATTON
User
Comment

OUTPUT DATA
****

UNIT TAG	UNIT SIZE	CFM	TOTAL SP	EXTERNAL SP	ADDITIONAL SP
642-6	3	870	0.96	0.75	0.00

FAN MODULE	FAN SIZE	FAN TYPE	FAN IGV	FAN DISC.	FAN DISC.	FAN DISC.	FAN RPM	FAN BHP	FAN HP
H	9B	FC	N	FTTP			1106	0.30	1.0

COIL TYP	T	ROW	FIN TYP	FPF	EAT/ EDB	EWB	LAT/ LDB	LWB	EWT	PSI	DT H2O	#/HR GPM	SENS MBH	TOTAL MBH	APD	SPD WPD
2 UW	N	2	TF	72	1		79.8		190		20	7.4		74.4	.04	.22
3 UW	Y	4	TF	72	89.4	72	61.5	58.9	42		10	7.8	26.9	39	.15	.74

Pos	Module Type	Width	Height	Length	Weight	Face Area / Vel	SP
1	Angled Filter	31.00 x	24.75 x	24.75	103	5.60 155	0.02
2	Small Coil	31.00 x	24.75 x	11.00	98	3.32 262	0.04
3	Medium Coil	31.00 x	24.75 x	15.50	133	3.32 262	0.15
4	FC Fan	31.00 x	24.75 x	36.00	193	0.65 1338	0.00
		=====	======	======	======		
		31.00	24.75	87.25	527		

SOUND POWER BY OCTAVE BANDS RE 10-12 WATTS
****

COMPONENT	1	2	3	4	5	6	7	8
DISCHARGE	82	78	72	65	65	63	61	59
INLET+CABINET	77	67	60	53	54	51	46	38

DIAGNOSTIC MESSAGES:

UNIT WEIGHT IS FOR SINGLE WALL CONSTRUCTED UNITS AND DOES NOT INCLUDE DRIVE, FILTER OR BASE RAIL WEIGHTS. FAN WEIGHTS INCLUDE THE WEIGHT OF AN OPEN DRIP PROOF MOTOR BASED ON MOTOR HP.
COIL MODULE WEIGHTS FOR CHILLED WATER AND HOT WATER COILS INCLUDE MODULE AND COIL WITH WATER. REFRIGERANT AND STEAM COIL MODULE WEIGHT IS FOR MODULE ONLY AND DOES NOT INCLUDE COIL. REFER TO PAGES 112-116 OF CLCH-D-7 FOR COMPLETE WEIGHT CHARTS

DIMENSIONS DO NOT INCLUDE BASE RAIL OR MOUNTING LEGS.

```
==============================================          Version 12.12
TRANE MODULAR CLIMATE CHANGER SELECTION PROGRAM          11/30/94
==============================================          14:00:35
```

For exclusive use by: C.D.S. SUPPORT GROUP

Project FT DEVONS - US ARMY CORP OF ENGS
Location RENOVATE BLDGS 642 & 644
Owner KEN PATTON
User
Comment

OUTPUT DATA
****

UNIT TAG	UNIT SIZE	CFM	TOTAL SP	EXTERNAL SP	ADDITIONAL SP
642-7	3	870	0.96	0.75	0.00

FAN MODULE	FAN SIZE	FAN TYPE	FAN IGV	FAN DISC.	FAN DISC.	FAN DISC.	FAN RPM	FAN BHP	FAN HP
H	9B	FC	N	FTTP			1106	0.30	1.0

COIL TYP	T	ROW	FIN TYP	FPF	EAT/ EDB	EWB	LAT/ LDB	LWB	EWT	PSI	DT H2O	#/HR GPM	SENS MBH	TOTAL MBH	APD	SPD WPD
2 UW	N	2	TF	72	1		79.8		190		20	7.4		74.4	.04	.22
3 UW	Y	4	TF	72	89.4	72	61.5	58.9	42		10	7.8	26.9	39	.15	.74

Pos	Module Type	Width	Height	Length	Weight	Face Area /	Vel	SP
1	Angled Filter	31.00 x	24.75 x	24.75	103	5.60	155	0.02
2	Small Coil	31.00 x	24.75 x	11.00	98	3.32	262	0.04
3	Medium Coil	31.00 x	24.75 x	15.50	133	3.32	262	0.15
4	FC Fan	31.00 x	24.75 x	36.00	193	0.65	1338	0.00
		=====	======	======	======			
		31.00	24.75	87.25	527			

SOUND POWER BY OCTAVE BANDS RE 10-12 WATTS
****

COMPONENT	1	2	3	4	5	6	7	8
DISCHARGE	82	78	72	65	65	63	61	59
INLET+CABINET	77	67	60	53	54	51	46	38

DIAGNOSTIC MESSAGES:

UNIT WEIGHT IS FOR SINGLE WALL CONSTRUCTED UNITS AND DOES NOT INCLUDE DRIVE, FILTER OR BASE RAIL WEIGHTS. FAN WEIGHTS INCLUDE THE WEIGHT OF AN OPEN DRIP PROOF MOTOR BASED ON MOTOR HP.
COIL MODULE WEIGHTS FOR CHILLED WATER AND HOT WATER COILS INCLUDE MODULE AND COIL WITH WATER. REFRIGERANT AND STEAM COIL MODULE WEIGHT IS FOR MODULE ONLY AND DOES NOT INCLUDE COIL. REFER TO PAGES 112-116 OF CLCH-D-7 FOR COMPLETE WEIGHT CHARTS

DIMENSIONS DO NOT INCLUDE BASE RAIL OR MOUNTING LEGS.

```
==================================================          Version 12.12
TRANE MODULAR CLIMATE CHANGER SELECTION PROGRAM             11/30/94
==================================================          14:04:29
```

For exclusive use by: C.D.S. SUPPORT GROUP

Project FT DEVONS - US ARMY CORP OF ENGS
Location RENOVATE BLDGS 642 & 644
Owner   KEN PATTON
User
Comment

OUTPUT DATA
****

UNIT TAG	UNIT SIZE	CFM	TOTAL SP	EXTERNAL SP	ADDITIONAL SP
644-1	3	840	0.95	0.75	0.00

FAN MODULE	FAN SIZE	FAN TYPE	FAN IGV	FAN DISC.	FAN DISC.	FAN DISC.	FAN RPM	FAN BHP	FAN HP
H	9B	FC	N	FTTP			1096	0.29	1.0

COIL TYP	T	ROW	FIN TYP	FPF	EAT/ EDB	EWB	LAT/ LDB	LWB	EWT	PSI	DT H2O	#/HR GPM	SENS MBH	TOTAL MBH	APD	SPD WPD
2 UW	N	2	TF	72	1		80.8		190		20	7.2		72.7	.04	.21
3 UW	Y	4	TF	72	89.4	72	61.2	58.7	42		10	7.6	26.2	38.2	.14	.73

Pos	Module Type	Width	Height	Length	Weight	Face Area /	Vel	SP
1	Angled Filter	31.00 x	24.75 x	24.75	103	5.60	150	0.02
2	Small Coil	31.00 x	24.75 x	11.00	98	3.32	253	0.04
3	Medium Coil	31.00 x	24.75 x	15.50	133	3.32	253	0.14
4	FC Fan	31.00 x	24.75 x	36.00	193	0.65	1292	0.00
		=====	======	======	======			
		31.00	24.75	87.25	527			

SOUND POWER BY OCTAVE BANDS RE 10-12 WATTS
****

COMPONENT	1	2	3	4	5	6	7	8
DISCHARGE	82	78	72	65	64	63	60	59
INLET+CABINET	77	67	59	53	54	51	46	38

DIAGNOSTIC MESSAGES:

UNIT WEIGHT IS FOR SINGLE WALL CONSTRUCTED UNITS AND DOES NOT INCLUDE DRIVE, FILTER OR BASE RAIL WEIGHTS. FAN WEIGHTS INCLUDE THE WEIGHT OF AN OPEN DRIP PROOF MOTOR BASED ON MOTOR HP.
COIL MODULE WEIGHTS FOR CHILLED WATER AND HOT WATER COILS INCLUDE MODULE AND COIL WITH WATER. REFRIGERANT AND STEAM COIL MODULE WEIGHT IS FOR MODULE ONLY AND DOES NOT INCLUDE COIL. REFER TO PAGES 112-116 OF CLCH-D-7 FOR COMPLETE WEIGHT CHARTS

DIMENSIONS DO NOT INCLUDE BASE RAIL OR MOUNTING LEGS.

```
==================================================          Version 12.12
TRANE MODULAR CLIMATE CHANGER SELECTION PROGRAM             11/30/94
==================================================          14:04:35
```

For exclusive use by: C.D.S. SUPPORT GROUP

Project FT DEVONS - US ARMY CORP OF ENGS
Location RENOVATE BLDGS 642 & 644
Owner KEN PATTON
User
Comment

OUTPUT DATA
****

UNIT TAG	UNIT SIZE	CFM	TOTAL SP	EXTERNAL SP	ADDITIONAL SP
644-2	3	1000	1.28	1.00	0.00

FAN MODULE	FAN SIZE	FAN TYPE	FAN IGV	FAN DISC.	FAN DISC.	FAN DISC.	FAN RPM	FAN BHP	FAN HP
H	9B	FC	N	FTTP			1275	0.46	1.0

COIL TYP	T	ROW	FIN TYP	FPF	EAT/ EDB	EWB	LAT/ LDB	LWB	EWT	PSI	DT H2O	#/HR GPM	SENS MBH	TOTAL MBH	APD	SPD WPD
2 UW	N	2	TF	72	1		76		190		20	8.1		81.4	.06	.25
3 UW	Y	4	TF	72	89.4	72	62.6	59.7	42		10	8.5	29.7	42.3	.19	.81

Pos	Module Type	Width	Height	Length	Weight	Face Area /	Vel	SP
1	Angled Filter	31.00 x	24.75 x	24.75	103	5.60	179	0.03
2	Small Coil	31.00 x	24.75 x	11.00	98	3.32	301	0.06
3	Medium Coil	31.00 x	24.75 x	15.50	133	3.32	301	0.19
4	FC Fan	31.00 x	24.75 x	36.00	193	0.65	1538	0.00
		=====	======	======	======			
		31.00	24.75	87.25	527			

SOUND POWER BY OCTAVE BANDS RE 10-12 WATTS
****

COMPONENT	1	2	3	4	5	6	7	8
DISCHARGE	85	81	75	70	69	68	65	64
INLET+CABINET	80	70	63	58	59	56	51	43

DIAGNOSTIC MESSAGES:

UNIT WEIGHT IS FOR SINGLE WALL CONSTRUCTED UNITS AND DOES NOT INCLUDE DRIVE, FILTER OR BASE RAIL WEIGHTS. FAN WEIGHTS INCLUDE THE WEIGHT OF AN OPEN DRIP PROOF MOTOR BASED ON MOTOR HP.
COIL MODULE WEIGHTS FOR CHILLED WATER AND HOT WATER COILS INCLUDE MODULE AND COIL WITH WATER. REFRIGERANT AND STEAM COIL MODULE WEIGHT IS FOR MODULE ONLY AND DOES NOT INCLUDE COIL. REFER TO PAGES 112-116 OF CLCH-D-7 FOR COMPLETE WEIGHT CHARTS

DIMENSIONS DO NOT INCLUDE BASE RAIL OR MOUNTING LEGS.

==========
TRANE MODULAR CLIMATE CHANGER SELECTION PROGRAM
==========

Version 12.12
11/30/94
14:04:40

For exclusive use by: C.D.S. SUPPORT GROUP

Project FT DEVONS - US ARMY CORP OF ENGS
Location RENOVATE BLDGS 642 & 644
Owner KEN PATTON
User
Comment

OUTPUT DATA
****

UNIT TAG	UNIT SIZE	CFM	TOTAL SP	EXTERNAL SP	ADDITIONAL SP
644-3	6	2130	1.62	1.25	0.00

FAN MODULE	FAN SIZE	FAN TYPE	FAN IGV	FAN DISC.	FAN DISC.	FAN DISC.	FAN RPM	FAN BHP	FAN HP
H	10B	FC	N	FTTP			1293	0.97	1.0

COIL TYP	T	ROW	FIN TYP	FPF	EAT/ EDB	EWB	LAT/ LDB	LWB	EWT	PSI	DT H2O	#/HR GPM	SENS MBH	TOTAL MBH	APD	SPD WPD
2 UW	N	2	TF	72	1		74.9		190		20	17		170.7	.08	.83
3 UW	N	4	TF	72	89.4	72	67.1	63.7	42		10	12.7	52.5	63.3	.24	.64

Pos	Module Type	Width	Height	Length	Weight	Face Area /	Vel	SP
1	Angled Filter	44.00 x	27.25 x	27.25	135	8.90	239	0.05
2	Small Coil	44.00 x	27.25 x	11.00	129	5.86	364	0.08
3	Medium Coil	44.00 x	27.25 x	15.50	179	5.86	364	0.24
4	FC Fan	44.00 x	27.25 x	41.00	279	1.41	1511	0.00
		=====	======	======	======			
		44.00	27.25	94.75	722			

SOUND POWER BY OCTAVE BANDS RE 10-12 WATTS
****

COMPONENT	1	2	3	4	5	6	7	8
DISCHARGE	86	81	78	73	74	71	69	62
INLET+CABINET	85	79	69	60	60	59	53	46

DIAGNOSTIC MESSAGES:

UNIT WEIGHT IS FOR SINGLE WALL CONSTRUCTED UNITS AND DOES NOT INCLUDE DRIVE, FILTER OR BASE RAIL WEIGHTS. FAN WEIGHTS INCLUDE THE WEIGHT OF AN OPEN DRIP PROOF MOTOR BASED ON MOTOR HP.
COIL MODULE WEIGHTS FOR CHILLED WATER AND HOT WATER COILS INCLUDE MODULE AND COIL WITH WATER. REFRIGERANT AND STEAM COIL MODULE WEIGHT IS FOR MODULE ONLY AND DOES NOT INCLUDE COIL. REFER TO PAGES 112-116 OF CLCH-D-7 FOR COMPLETE WEIGHT CHARTS

DIMENSIONS DO NOT INCLUDE BASE RAIL OR MOUNTING LEGS.

==========
TRANE MODULAR CLIMATE CHANGER SELECTION PROGRAM
==========

Version 12.12
11/30/94
14:04:45

For exclusive use by: C.D.S. SUPPORT GROUP

Project FT DEVONS - US ARMY CORP OF ENGS
Location RENOVATE BLDGS 642 & 644
Owner KEN PATTON
User
Comment

OUTPUT DATA
****

UNIT TAG	UNIT SIZE	CFM	TOTAL SP	EXTERNAL SP	ADDITIONAL SP
644-4	6	2355	1.69	1.25	0.00

FAN MODULE	FAN SIZE	FAN TYPE	FAN IGV	FAN DISC.	FAN DISC.	FAN DISC.	FAN RPM	FAN BHP	FAN HP
H	10B	FC	N	FTTP			1340	1.17	1.5

COIL TYP	T	ROW	FIN TYP	FPF	EAT/ EDB	EWB	LAT/ LDB	LWB	EWT	PSI	DT H2O	#/HR GPM	SENS MBH	TOTAL MBH	APD	SPD WPD
2 UW	N	2	TF	72	1		72		190		20	18.1		181.3	.1	.93
3 UW	N	4	TF	72	89.4	72	67.5	63.9	42		10	13.7	57	68.3	.28	.74

Pos	Module Type	Width	Height	Length	Weight	Face Area /	Vel	SP
1	Angled Filter	44.00 x	27.25 x	27.25	135	8.90	265	0.06
2	Small Coil	44.00 x	27.25 x	11.00	129	5.86	402	0.10
3	Medium Coil	44.00 x	27.25 x	15.50	179	5.86	402	0.28
4	FC Fan	44.00 x	27.25 x	41.00	282	1.41	1670	0.00
		=====	======	======	======			
		44.00	27.25	94.75	725			

SOUND POWER BY OCTAVE BANDS RE 10-12 WATTS
****

COMPONENT	1	2	3	4	5	6	7	8
DISCHARGE	87	82	80	74	76	73	71	64
INLET+CABINET	86	80	71	61	61	60	55	48

DIAGNOSTIC MESSAGES:

UNIT WEIGHT IS FOR SINGLE WALL CONSTRUCTED UNITS AND DOES NOT INCLUDE DRIVE, FILTER OR BASE RAIL WEIGHTS. FAN WEIGHTS INCLUDE THE WEIGHT OF AN OPEN DRIP PROOF MOTOR BASED ON MOTOR HP.
COIL MODULE WEIGHTS FOR CHILLED WATER AND HOT WATER COILS INCLUDE MODULE AND COIL WITH WATER. REFRIGERANT AND STEAM COIL MODULE WEIGHT IS FOR MODULE ONLY AND DOES NOT INCLUDE COIL. REFER TO PAGES 112-116 OF CLCH-D-7 FOR COMPLETE WEIGHT CHARTS

DIMENSIONS DO NOT INCLUDE BASE RAIL OR MOUNTING LEGS.

==========
TRANE MODULAR CLIMATE CHANGER SELECTION PROGRAM
==========

Version 12.12
11/30/94
14:04:50

For exclusive use by: C.D.S. SUPPORT GROUP

Project FT DEVONS - US ARMY CORP OF ENGS
Location RENOVATE BLDGS 642 & 644
Owner KEN PATTON
User
Comment

OUTPUT DATA
****

UNIT TAG	UNIT SIZE	CFM	TOTAL SP	EXTERNAL SP	ADDITIONAL SP
644-5	8	3000	1.44	1.00	0.00

FAN MODULE	FAN SIZE	FAN TYPE	FAN IGV	FAN DISC.	FAN DISC.	FAN DISC.	FAN RPM	FAN BHP	FAN HP
H	12B	FC	N	FTTP			1061	1.28	1.5

COIL TYP	T	ROW	FIN TYP	FPF	EAT/ EDB	EWB	LAT/ LDB	LWB	EWT	PSI	DT H2O	#/HR GPM	SENS MBH	TOTAL MBH	APD	SPD WPD
2 UW	N	2	TF	72	1		73.4		190		20	23.5		235.5	.09	1.29
3 UW	N	4	TF	72	89.4	72	66.7	63.1	42		10	19	75.5	95	.28	1.16

Pos	Module Type	Width	Height	Length	Weight	Face Area /	Vel	SP
1	Angled Filter	48.00 x	31.00 x	31.00	158	11.10	270	0.07
2	Small Coil	48.00 x	31.00 x	11.00	146	7.54	398	0.09
3	Medium Coil	48.00 x	31.00 x	15.50	207	7.54	398	0.28
4	FC Fan	48.00 x	31.00 x	44.00	318	1.90	1579	0.00
		=====	======	======	======			
		48.00	31.00	101.50	829			

SOUND POWER BY OCTAVE BANDS RE 10-12 WATTS
****

COMPONENT	1	2	3	4	5	6	7	8
DISCHARGE	89	83	79	76	77	72	71	63
INLET+CABINET	88	81	71	62	63	61	55	47

DIAGNOSTIC MESSAGES:

UNIT WEIGHT IS FOR SINGLE WALL CONSTRUCTED UNITS AND DOES NOT INCLUDE DRIVE, FILTER OR BASE RAIL WEIGHTS. FAN WEIGHTS INCLUDE THE WEIGHT OF AN OPEN DRIP PROOF MOTOR BASED ON MOTOR HP.
COIL MODULE WEIGHTS FOR CHILLED WATER AND HOT WATER COILS INCLUDE MODULE AND COIL WITH WATER. REFRIGERANT AND STEAM COIL MODULE WEIGHT IS FOR MODULE ONLY AND DOES NOT INCLUDE COIL. REFER TO PAGES 112-116 OF CLCH-D-7 FOR COMPLETE WEIGHT CHARTS

DIMENSIONS DO NOT INCLUDE BASE RAIL OR MOUNTING LEGS.

==========
TRANE MODULAR CLIMATE CHANGER SELECTION PROGRAM
==========

Version 12.12
11/30/94
14:04:57

For exclusive use by: C.D.S. SUPPORT GROUP

Project FT DEVONS - US ARMY CORP OF ENGS
Location RENOVATE BLDGS 642 & 644
Owner KEN PATTON
User
Comment

OUTPUT DATA
****

UNIT TAG	UNIT SIZE	CFM	TOTAL SP	EXTERNAL SP	ADDITIONAL SP
644-6	3	830	0.94	0.75	0.00

FAN MODULE	FAN SIZE	FAN TYPE	FAN IGV	FAN DISC.	FAN DISC.	FAN DISC.	FAN RPM	FAN BHP	FAN HP
H	9B	FC	N	FTTP			1090	0.28	1.0

COIL TYP	T	ROW	FIN TYP	FPF	EAT/ EDB	EWB	LAT/ LDB	LWB	EWT	PSI	DT H2O	#/HR GPM	SENS MBH	TOTAL MBH	APD	SPD WPD
2 UW	N	2	TF	72	1		81.1		190		20	7.2		72.1	.04	.21
3 UW	Y	4	TF	72	89.4	72	61.1	58.6	42		10	7.6	26	38	.13	.72

Pos	Module Type	Width	Height	Length	Weight	Face Area /	Vel	SP
1	Angled Filter	31.00 x	24.75 x	24.75	103	5.60	148	0.02
2	Small Coil	31.00 x	24.75 x	11.00	98	3.32	250	0.04
3	Medium Coil	31.00 x	24.75 x	15.50	133	3.32	250	0.13
4	FC Fan	31.00 x	24.75 x	36.00	193	0.65	1277	0.00
		=====	======	======	======			
		31.00	24.75	87.25	527			

SOUND POWER BY OCTAVE BANDS RE 10-12 WATTS
****

COMPONENT	1	2	3	4	5	6	7	8
DISCHARGE	82	77	72	65	64	63	60	58
INLET+CABINET	76	67	59	53	54	51	46	38

DIAGNOSTIC MESSAGES:

UNIT WEIGHT IS FOR SINGLE WALL CONSTRUCTED UNITS AND DOES NOT INCLUDE DRIVE, FILTER OR BASE RAIL WEIGHTS. FAN WEIGHTS INCLUDE THE WEIGHT OF AN OPEN DRIP PROOF MOTOR BASED ON MOTOR HP.
COIL MODULE WEIGHTS FOR CHILLED WATER AND HOT WATER COILS INCLUDE MODULE AND COIL WITH WATER. REFRIGERANT AND STEAM COIL MODULE WEIGHT IS FOR MODULE ONLY AND DOES NOT INCLUDE COIL. REFER TO PAGES 112-116 OF CLCH-D-7 FOR COMPLETE WEIGHT CHARTS

DIMENSIONS DO NOT INCLUDE BASE RAIL OR MOUNTING LEGS.

==========
TRANE MODULAR CLIMATE CHANGER SELECTION PROGRAM
==========

Version 12.12
11/30/94
14:05:03

For exclusive use by: C.D.S. SUPPORT GROUP

Project FT DEVONS - US ARMY CORP OF ENGS
Location RENOVATE BLDGS 642 & 644
Owner KEN PATTON
User
Comment

OUTPUT DATA
****

UNIT TAG	UNIT SIZE	CFM	TOTAL SP	EXTERNAL SP	ADDITIONAL SP
644-7	3	830	0.94	0.75	0.00

FAN MODULE	FAN SIZE	FAN TYPE	FAN IGV	FAN DISC.	FAN DISC.	FAN DISC.	FAN RPM	FAN BHP	FAN HP
H	9B	FC	N	FTTP			1090	0.28	1.0

COIL TYP	T	ROW	FIN TYP	FPF	EAT/ EDB	EWB	LAT/ LDB	LWB	EWT	PSI	DT H2O	#/HR GPM	SENS MBH	TOTAL MBH	APD	SPD WPD
2 UW	N	2	TF	72	1		81.1		190		20	7.2		72.1	.04	.21
3 UW	Y	4	TF	72	89.4	72	61.1	58.6	42		10	7.6	26	38	.13	.72

Pos	Module Type	Width	Height	Length	Weight	Face Area / Vel	SP
1	Angled Filter	31.00 x	24.75 x	24.75	103	5.60 148	0.02
2	Small Coil	31.00 x	24.75 x	11.00	98	3.32 250	0.04
3	Medium Coil	31.00 x	24.75 x	15.50	133	3.32 250	0.13
4	FC Fan	31.00 x	24.75 x	36.00	193	0.65 1277	0.00
		=====	======	======	======		
		31.00	24.75	87.25	527		

SOUND POWER BY OCTAVE BANDS RE 10-12 WATTS
****

COMPONENT	1	2	3	4	5	6	7	8
DISCHARGE	82	77	72	65	64	63	60	58
INLET+CABINET	76	67	59	53	54	51	46	38

DIAGNOSTIC MESSAGES:

UNIT WEIGHT IS FOR SINGLE WALL CONSTRUCTED UNITS AND DOES NOT INCLUDE DRIVE, FILTER OR BASE RAIL WEIGHTS. FAN WEIGHTS INCLUDE THE WEIGHT OF AN OPEN DRIP PROOF MOTOR BASED ON MOTOR HP.
COIL MODULE WEIGHTS FOR CHILLED WATER AND HOT WATER COILS INCLUDE MODULE AND COIL WITH WATER. REFRIGERANT AND STEAM COIL MODULE WEIGHT IS FOR MODULE ONLY AND DOES NOT INCLUDE COIL. REFER TO PAGES 112-116 OF CLCH-D-7 FOR COMPLETE WEIGHT CHARTS

DIMENSIONS DO NOT INCLUDE BASE RAIL OR MOUNTING LEGS.

BUILDINGS 642 & 644

BOILER BREECHING SIZING

NED FORM 223
27 Sept 49

NEW ENGLAND DIVISION
CORPS OF ENGINEERS, U.S. ARMY

PAGE _____

SUBJECT: Bldg 642 & 644
COMPUTATION: Boiler Breeching Sizing
COMPUTED BY: K. Patton
CHECKED BY: _____
DATE: 7 Sep 94

HR Smith 28A-W-5

10.4 GPH No. 2 OIL & 1491 MBH GAS

10.4 x 2 x 72 CFM/GPH = 1500 CFM

1500 CFM with 16" DIA DUCT ⇒ .08" WC/100 FT

18 X 12 IS EQUIVALENT TO 16" ø

1-90° L at 1.42 X 12 =	17 LF
STRAIGHT UP INTO BREECHING	10 LF
1-90° MITERED L at 5.4 x 12	65 LF
STRAIGHT 12 X 12 DUCT	9 LF
(1 Boiler, 750 CFM, 0.09" WC/100 LF)	101 LF

$\frac{101}{100} \times .09 = .091"$ WC

STRAIGHT 18 X 12 DUCT	10 LF
1-90° L AT .92 X 16	15 LF
STRAIGHT 18 X 12 DUCT	10 LF
1-90° MITERED L 6.2 X 18	112 LF
(2 Boilers, 1500 CFM, .08" WC/100 FT	147 LF

$\frac{147}{100} \times .08 = .118"$ WC

TOTAL FRICTION LOSS = .091" + .118" = **.209" WC**

NED FORM 223
27 Sept 49

NEW ENGLAND DIVISION
CORPS OF ENGINEERS, U.S. ARMY

PAGE

SUBJECT Bldg 642 & 644
COMPUTATION Boiler Breeching
COMPUTED BY K. Patton CHECKED BY DATE 7 Sep 94

From HR Smith Tech Info

Ave 425°F Stack Temp ⇒ 36 FT = .209" WC

Chimney must be 36 FT above centerline of boiler outlet to have a stack effect of .209" WC

CHIMNEY OR VENT

88 forced draft boilers operate with overfire positive pressure. Breeching damper must be adjusted during burner start up to .1" W.C. positive pressure.

CAUTION Avoid long horizontal breechings, excessive numbers of elbows or tees, or other obstructions restricting flow of combustion gases.

See page 23 for minimum breeching diameter. Construct metal vent—select material and thickness in compliance with local codes. Refer to ASHRAE Guide for chimney and breeching calculations.

Two types of vent systems may be used:

FORCED DRAFT

Boiler, breech, and stub vent operate at positive pressure. Entire system must be gas tight to prevent leaks. Stub vent height must be limited to prevent negative draft. (See Figures 4 and 5) Barometric control cannot be installed with stub vent.

BALANCED DRAFT

Boiler operates with positive pressure overfire. Chimney provides negative pressure that must be balanced with a barometric draft control. (See Figures 6 and 7.)

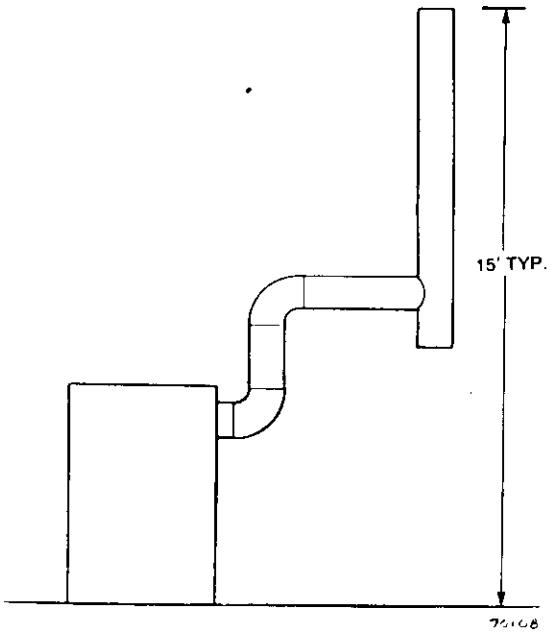

Stub Vent—Forced Draft
Single Boiler
FIGURE 4

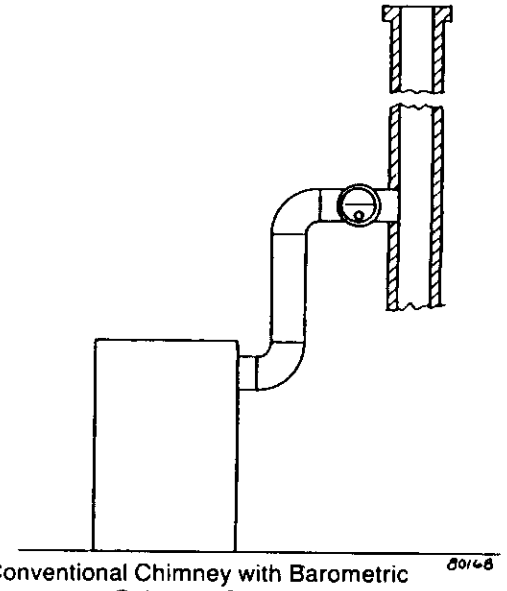

Conventional Chimney with Barometric Balanced Draft
FIGURE 6

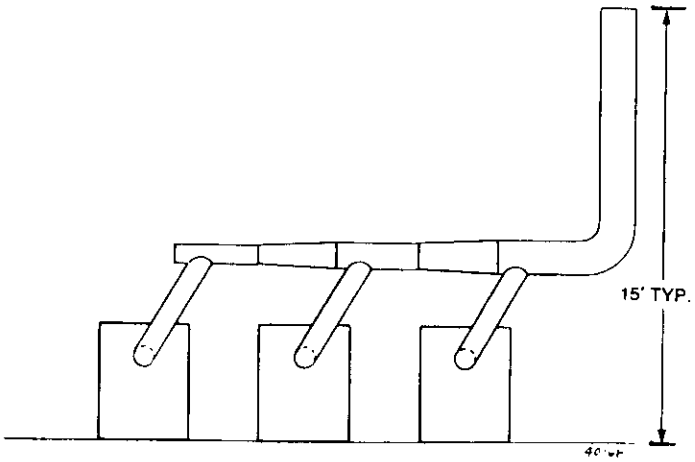

Stub Vent—Forced Draft
Multiple Boiler
FIGURE 5

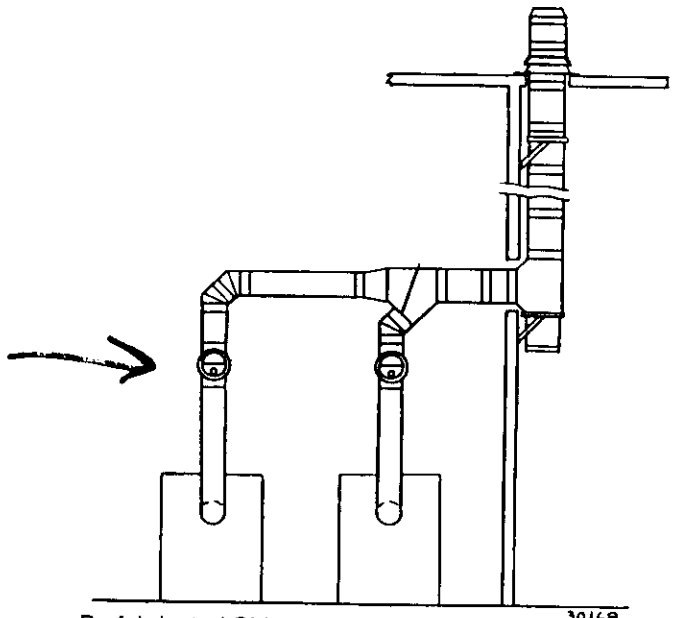

Prefabricated Chimney with Barometric Balanced Draft
FIGURE 7

359

LIFE CYCLE COST ANALYSIS

SUPPLEMENTAL INFORMATION

ANNUAL COMPONENT COSTS

Building: BLDG 642, FT DEVENS, OPTION-1 10-05-94
Weather: Fort Devens (Boston TMY) HAP v3.04
Prepared by: NEW ENGLAND DIVISION Page 1 of 1

****

TABLE 1. COSTS BY COMPONENT

Component	<---- Annual Costs -----> ($)	($/sqft)*	% of Total
Air System Fans	1676	0.047	4.3 %
Cooling Plants	4097	0.115	10.5 %
Absorption Chillers	0	0.000	0.0 %
Heating Plants	9658	0.271	24.7 %
Pumps	1374	0.039	3.5 %
Cooling Towers	0	0.000	0.0 %
>>> HVAC Subtotal	16804	0.472	43.0 %
Lights	22298	0.626	57.0 %
Electric Equipment	0	0.000	0.0 %
Miscellaneous Electric	0	0.000	0.0 %
Miscellaneous Fuel Use	0	0.000	0.0 %
>>> Non-HVAC Subtotal	22298	0.626	57.0 %
>>> GRAND TOTAL	39103	1.097	100.0 %

* Cost per unit floor area is based on the gross building floor area.
Gross floor area.....: 35637 sqft
Conditioned floor area.....: 35637 sqft

ENERGY BUDGET BY SYSTEM COMPONENT

Building: BLDG 642, FT DEVENS, OPTION-1 — 10-05-94
Weather: Fort Devens (Boston TMY) — HAP v3.04
Prepared by: NEW ENGLAND DIVISION — Page 1 of 1

****

TABLE 1. ANNUAL COIL LOADS

Component	(kBTU)	(kBTU/sqft)*
Cooling Loads	600121	16.840
Heating Loads	995059	27.922

TABLE 2. ENERGY CONSUMPTION BY SYSTEM COMPONENT

	<----- Site Energy *---->		<---- Source Energy *--->	
Component	(kBTU)	(kBTU/sqft)*	(kBTU)	(kBTU/sqft)*
Air System Fans	65723	1.844	65723	1.844
Cooling Plants	160672	4.509	160672	4.509
Absorption Chillers	0	0.000	0	0.000
Heating Plants	1659397	46.564	1659397	46.564
Pumps	53880	1.512	53880	1.512
Cooling Towers	0	0.000	0	0.000
>>> HVAC Total	1939671	54.429	1939671	54.429
Lights	874504	24.540	874504	24.540
Electric Equipment	0	0.000	0	0.000
Misc. Electric	0	0.000	0	0.000
Misc. Fuel Use	0	0.000	0	0.000
>>> Non-HVAC Total	874504	24.540	874504	24.540
>>> GRAND TOTAL	2814175	78.969	2814175	78.969

* Site Energy is the actual energy consumed.
* Source Energy is the site energy divided by the electric generating efficiency of 100.0 %
* Cost per unit floor area is based on the gross building floor area.
  Gross floor area.....: 35637 sqft
  Conditioned floor area.....: 35637 sqft

ANNUAL ENERGY COSTS

Building: BLDG 642, FT DEVENS, OPTION-1 10-05-94
Weather: Fort Devens (Boston TMY) HAP v3.04
Prepared by: NEW ENGLAND DIVISION Page 1 of 1

****

TABLE 1. COSTS BY ENERGY CATEGORY

Component	Annual Energy	<---- Annual Costs ($)	-----> ($/sqft)*	% of Total
Electric	82394 kWh	7168	0.201	18.3 %
Natural Gas	16585 Therm	9636	0.270	24.6 %
Fuel Oil	0 Therm	0	0.000	0.0 %
Propane	0	0	0.000	0.0 %
Remote Heating	0	0	0.000	0.0 %
Remote Cooling	0	0	0.000	0.0 %
>>> HVAC Subtotal		16804	0.472	43.0 %
Electric	256302 kWh	22298	0.626	57.0 %
Natural Gas	0 Therm	0	0.000	0.0 %
Fuel Oil	0 Therm	0	0.000	0.0 %
Propane	0	0	0.000	0.0 %
Remote Heating	0	0	0.000	0.0 %
>>> Non-HVAC Subtotal		22298	0.626	57.0 %
>>> GRAND TOTAL		39103	1.097	100.0 %

* Cost per unit floor area is based on the gross building floor area.
Gross floor area.....: 35637 sqft
Conditioned floor area.....: 35637 sqft

ENERGY BUDGET BY ENERGY SOURCE

Building: BLDG 642, FT DEVENS, OPTION-1 — 10-05-94
Weather: Fort Devens (Boston TMY) — HAP v3.04
Prepared by: NEW ENGLAND DIVISION — Page 1 of 1

****

TABLE 1. ANNUAL COIL LOADS

Component	(kBTU)	(kBTU/sqft)*
Cooling Loads	600121	16.840
Heating Loads	995059	27.922

TABLE 2. ENERGY CONSUMPTION BY ENERGY COMPONENT

	<----- Site Energy *---->		<---- Source Energy *--->	
Component	(kBTU)	(kBTU/sqft)*	(kBTU)	(kBTU/sqft)*
Electric	281129	7.889	281129	7.889
Natural Gas	1658542	46.541	1658542	46.541
Fuel Oil	0	0.000	0	0.000
Propane	0	0.000	0	0.000
Remote Heating	0	0.000	0	0.000
Remote Cooling	0	0.000	0	0.000
>>> HVAC Total	1939671	54.429	1939671	54.429
Electric	874504	24.540	874504	24.540
Natural Gas	0	0.000	0	0.000
Fuel Oil	0	0.000	0	0.000
Propane	0	0.000	0	0.000
Remote Heating	0	0.000	0	0.000
>>> Non-HVAC Total	874504	24.540	874504	24.540
>>> GRAND TOTAL	2814175	78.969	2814175	78.969

* Site Energy is the actual energy consumed.
* Source Energy is the site energy divided by the electric generating efficiency of 100.0 %
* Cost per unit floor area is based on the gross building floor area.
  Gross floor area.....: 35637 sqft
  Conditioned floor area.....: 35637 sqft