# Design Analysis

Appendix B - Structural and Electrical Design Computations

# Conversion of U.S. Army Reserve Buildings 642 & 644 Fort Devens, Massachusetts

Final Design Submittal

US Army Corps
of Engineers
New England Division

December 1994

# STRUCTURAL DESIGN COMPUTATIONS

SUBJECT

COMPUTATION

COMPUTED BY CHECKED BY DATE

LOAD COMBINATIONS FOR THE BUILDING 642 (STAIR WELL)

1. D
2. D + L + ($L_r$ or S or R)
3. D + (W or E)
4. D + L + ($L_r$ or S or R) + (W or E)

Check : No. 4 As following! -

(a) D + L + S + W

(b) D + L + S + E

D = DEAD LOAD

ROOF LOAD

| | |
|---|---|
| STEEL FRAMING | 11 PSF |
| ROOFING (FULLY ADHERED) | 1 |
| INSULATION (2" RIGID) | 3 |
| DECK, METAL 18 GAGE | 3 |
| MISC. SUSPEND FROM CEILING | 5 |
| | 23 PSF |

LIVE LOAD (STAIR & EXITWAYS) 100 PSF

SNOW LOAD (GROUND SNOW LOAD) 28.35 PSF

WIND LOAD

(1) → (4) A & B Axis

AXIS
123.6 lb/ft (44.5 lb/ft) 9.89 psf

116 lb/ft (41.70 lb/ft) 9.28 psf

100 lb/ft (36 lb/ft) 8.00 psf

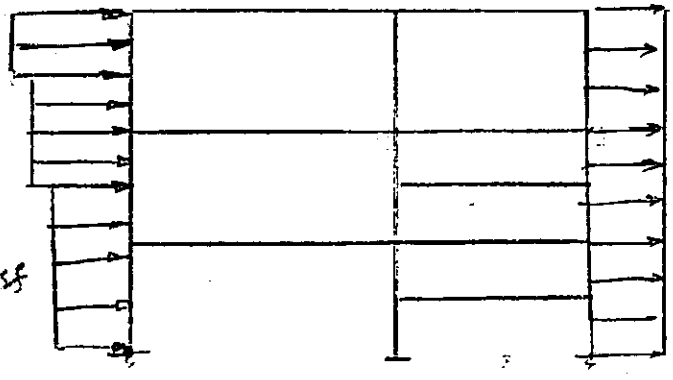

EL. 30

(1) → (4) 56 p/ft

4.48 psf (20.16 p/ft)

EL. 0.0

WIND PRESSURE ONE STAIR SYSTEM

SUBJECT

COMPUTATION

COMPUTED BY CHECKED BY DATE

WIND LOADS

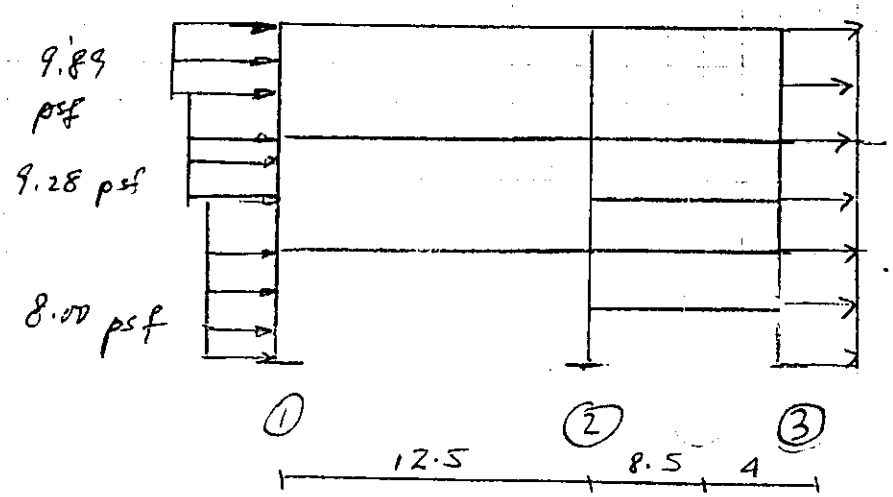


Assume WIND LOAD = 9.89 psf

SUBJECT

COMPUTATION

COMPUTED BY CHECKED BY DATE

WIND LOADS FOR THE BUILDING:

(A) EXTERNAL WIND PRESSURE ON THE BUILDING

(1) $p = q\, G_h\, C_p$

$q_z = 0.00256\, K_z\, (IV)^2$ EQ 5-2

Where $K_z = 0.50$ At $z \doteq 30$ FT, Exposure B Table 5-2

$K_h = 0.50$ At $z = 31$ FT "

$I = 1.00$ Cat. I. Building Table 5-1

$V = 80$ mph Appendix A

$q_z \doteq q_h = 0.00256\,(K_z)(1.0 \times 80)^2$
$= 16.38\, K_z$

$G_h = 1.51$ Exposure B Table 5-3

$C_p = 0.8$ WINDWARD WALL Fig. 5.2

SUBJECT

COMPUTATION

COMPUTED BY CHECKED BY DATE

(1) PRESSURE ON WINDWARD WALL, p

| z | $K_z$ | $16.38 K_z$ $q_z$ (1) | $G_h$ (2) | $C_p$ (3) | p (1)x(2)x(3) |
|---|---|---|---|---|---|
| 25 | 0.46 | 7.53 | 1.54 | 0.8 | 9.28 |
| 15 | 0.37 | 6.06 | 1.65 | 0.8 | 8.00 |
| 5 | 0.37 | 6.06 | 1.65 | 0.8 | 8.00 |
| 30 | 0.50 | 8.19 | 1.51 | 0.8 | 9.89 |

(2) LEEWARD WALL

$p = q_h G_h C_p$ EQ 5-2

where, $q_h = 9.89$ psf AT $h = z = 30'$

$G_h = 1.51$

$C_p \doteq -0.3$ $L/B = 58/30 = 1.933$

$p = 9.89 (1.51)(-0.3) = -4.48$ psf

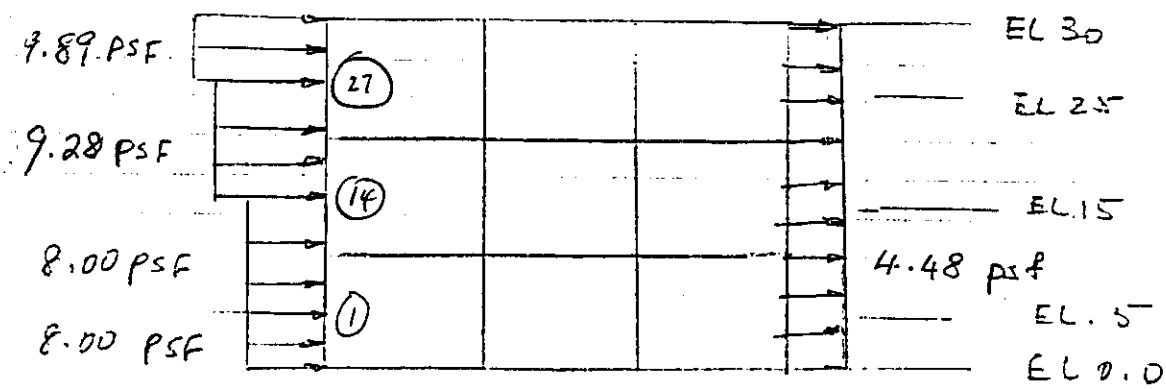


WIND PRESSURE ON BUILDING

SUBJECT E.M. Barracks, FORT DEVENS, MA
COMPUTATION Seismic Qualification
COMPUTED BY E FUNG CHECKED BY JAC DATE MARCH 94

(1) Seismic Zone factor (Zone = 2A)

(a) $Z = 0.15$ (3-5 pg. 3-1)

The E.M Barracks (BLDG 642 & 644) WILL BE CONVERTED TO OFFICE SPACE } is Category IV building (3-6 (d) pg 3-5)

(b) Soil factor S

$S = 1.5$ (Ts unknown, ∴ S = MAX VALUE)
(pg 4-6 para. (f))

(c)

$$V = \frac{ZIC}{R_w} W$$

EQ 1-1 (SEAOC)
OR EQ 34-1 (UBC)

$$C = \frac{1.25S}{T^{2/3}}$$

EQ 34-2 (UBC)
1-2 (SEAOC)

$$T = C_t (h_n)^{3/4}$$

EQ 34-3 (UBC)
1-3 (SEAOC)

Where,

$C_t = 0.02$ (see pg 162 UBC)

$h_n$ = height in ft above the base to Level M (Roof)
= 31' - 7 1/16"

SUBJECT

COMPUTATION

COMPUTED BY CHECKED BY DATE

$W$ = seismic dead loads

$I$ = importance factor = 1.0 (CAT IV Occupancy Non-Essential Building)

$$C = \frac{1.25\ (1.5)}{(0.2664)^{2/3}} = \frac{1.875}{0.414} = 4.529$$

$$T = 0.02\ (31' - 7\tfrac{1}{16}'')^{3/4}$$
$$= 0.02\ (31.59)^{3/4}$$
$$= 0.02\ (13.32)$$
$$= 0.2664$$

Fig 4-3 For $S_3$ if $T < 0.5$
$C = 2.75$

$R_W = 5$ C3(b) (TABLE NO. 230 - UBC - 91)

or 8 ?

761 C

SUBJECT

COMPUTATION

COMPUTED BY CHECKED BY DATE

SEISMIC LOADING INPUT Assume W = 12 kips.

| LEVEL | $h_x$ | $\Delta h$ | $W_x$ | $W_x h_x$ | $\frac{Wh}{\Sigma W h}$ | $F_x$ lbs | $V_x$ |
|---|---|---|---|---|---|---|---|
| R | 30' | 10' | 4 kip | 120 | .5 | 354 | 354 |
| 3 | 20' | 10' | 4 kips | 80 | .33 | 233 | 587 |
| 2 | 10' | 10' | 4 kips | 40 | .17 | 120 | 707 |
| | | | 12 kips | 240 | 1.0 | 707 | |
| | | | W | | | V | |

See Pg 12 $V = 0.05893(12 \text{ kips}) = 0.7072 \text{ kips}$

FRAME ANALYSIS INPUT

| | SNOW | D.L | L.L. | SEISMIC FORCE |
|---|---|---|---|---|
| Roof | 28.35 psf | 23 psf | — | 350 lbs |
| 3rd | — | 23 psf | 100 psf | 233 lbs |
| 2ND | — | 23 psf | 100 psf | 120 lbs. |

SUBJECT

COMPUTATION

COMPUTED BY CHECKED BY DATE

Ref: ANSI / ASCE 7-88 & TM 5-809-1 / AFM 88-3 Chap 1 pg. 23

Snow Loads $P_f = 0.7\, C_e\, C_t\, I\, P_g$

$C_e = 0.9$ (Case B) — Table 18 pg 27

$C_t = 1.0$ (Heated structure) - Tabe 19

$I = 1.0$ Cat. I — Table 1 & Table 20

$P_g = 45$ psf (Ground Snow Load)

$P_f = (0.7)(0.9)(1.0)(1.0)\,45\text{ psf} = 28.35$ psf (EQ 6-1a)

$\theta = \tan^{-1} \frac{3/8''}{12''} = 1.79^\circ < \theta = 15^\circ$

Therefore, the snow load, $P_f$ on an unobstructed flat roof = 28.35 psf

NED FORM 223
27 Sept 49

NEW ENGLAND DIVISION
CORPS OF ENGINEERS, U.S. ARMY



SUBJECT

COMPUTATION

COMPUTED BY CHECKED BY DATE

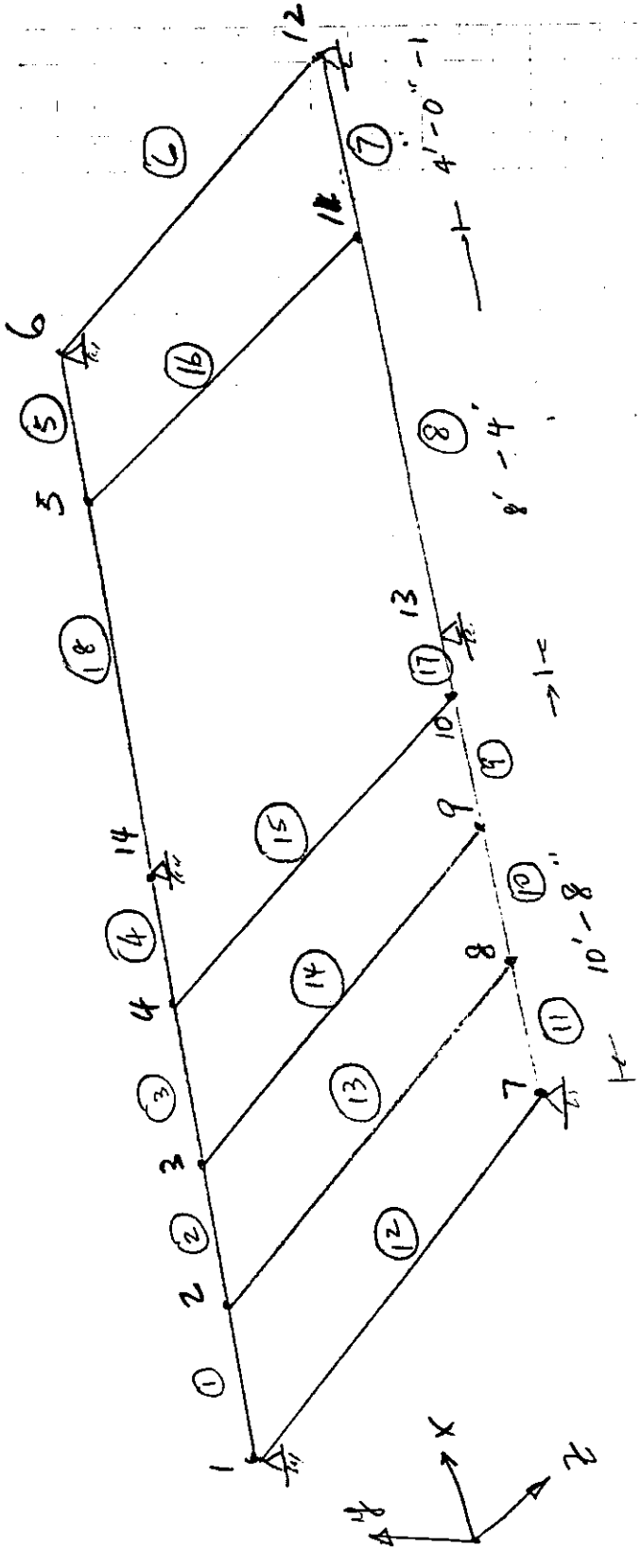

SUBJECT

COMPUTATION

COMPUTED BY CHECKED BY DATE

LOADING FOR 1 ST & 2ND FLOOR

(A) USING 18 DECK GAGE

4" SLAB (150 PCF CONCRETE)

COMPOSITE FLOOR DECK

DECK LOADS = 38 PSF

D + L = 100 psf + 23 psf (CONSERVATIVE)

ASSUME 4 FT SPAN (CONSERVATIVE)

FOR ALL MEMBER ALONG Z - AXIS

Therefore:

(I) MEMBER 13 & 14 LOADS = 4 ft (100 + 23 + 38) psf

= 4 x 161 psf

= 644 lb/ft

(II) MEMBER 12 15 16 6 LOADS = 2 ft (100 + 23 + 38) psf

= 322 lb/ft

```
**************************************************
*                                                *
*            S T A A D - III                     *
*            Revision 19.Ø                       *
*            Proprietary Program of              *
*            RESEARCH ENGINEERS, Inc.            *
*            Date=    NOV 16, 1994               *
*            Time=    16: 4:12                   *
*                                                *
*       USER ID: U.S. Army Corps of Engineers    *
**************************************************
```

```
 1. STAAD FLOOR FLOOR
 2. INPUT WIDTH 72
 3. UNIT FEET POUND
 4. JOINT COORDINATES
 5. 1 Ø. Ø. Ø.; 2 2.75 Ø. Ø.; 3 5.75 Ø. Ø.; 4 8.5 Ø. Ø.; 5 16.83 Ø. Ø.
 6. 6 2Ø.83 Ø. Ø.; 7 Ø. Ø. 9.; 8 2.75 Ø. 9.; 9 5.75 Ø. 9.; 1Ø 8.5 Ø. 9.
 7. 11 16.83 Ø. 9.; 12 2Ø.83 Ø. 9.; 13 1Ø.667 Ø. 9.; 14 1Ø.67 Ø. Ø.
 8. MEMBER INCIDENCES
 9. 1 1 2; 2 2 3; 3 3 4; 4 4 14; 5 5 6; 6 6 12; 7 12 11; 8 11 13; 9 1Ø 9
1Ø. 1Ø 9 8; 11 8 7; 12 7 1; 13 8 2; 14 9 3; 15 1Ø 4; 16 11 5; 17 1Ø 13
11. 18 14 5
12. MEMBER PROPERTY AMERICAN
13. 1 TO 3 5 7 TO 11 TABLE ST W8X15
14. 4 12 17 18 TABLE ST W8X15
15. 13 14 TABLE ST W6X12
16. 6 15 16 TABLE ST W8X15
17. CONSTANTS
18. E STEEL ALL
19. SUPPORTS
2Ø. 1 6 7 12 PINNED
21. 13 14 PINNED
22. LOAD 1 DEAD
23. MEMBER LOAD
24. 13 14 UNI Y -644.
25. 12 15 16 6 UNI Y -322.
26. PERFORM ANALYSIS PRINT LOAD DATA
```

P R O B L E M  S T A T I S T I C S

```
NUMBER OF JOINTS/MEMBER+ELEMENTS/SUPPORTS =    14/   18/    6
ORIGINAL/FINAL BAND-WIDTH =   1Ø/    2
TOTAL PRIMARY LOAD CASES  =    1, TOTAL DEGREES OF FREEDOM =    36
SIZE OF STIFFNESS MATRIX =     324 DOUBLE PREC. WORDS
REQUIRED DISK SPACE =   12.Ø3 MB, TOTAL EXMEM =  2.24 MB
```

LOADING 1 DEAD

MEMBER LOAD - UNIT POUN FEET

| MEMBER | UDL | | L1 | L2 | CON | L | LIN1 | LIN2 |
|---|---|---|---|---|---|---|---|---|
| 13 | -644.000 | Y | 0.00 | 9.00 | | | | |
| 14 | -644.000 | Y | 0.00 | 9.00 | | | | |
| 12 | -322.000 | Y | 0.00 | 9.00 | | | | |
| 15 | -322.000 | Y | 0.00 | 9.00 | | | | |
| 16 | -322.000 | Y | 0.00 | 9.00 | | | | |
| 6 | -322.000 | Y | 0.00 | 9.00 | | | | |

++ PROCESSING ELEMENT STIFFNESS MATRIX. 16: 4:14
++ PROCESSING GLOBAL STIFFNESS MATRIX. 16: 4:14
++ PROCESSING TRIANGULAR FACTORIZATION. 16: 4:15
++ CALCULATING JOINT DISPLACEMENTS. 16: 4:15
++ CALCULATING MEMBER FORCES. 16: 4:15

********** END OF DATA FROM INTERNAL STORAGE **********

27. PERFORM ANALYSIS PRINT STATICS CHECK

```
***TOTAL APPLIED LOAD ( POUN FEET ) SUMMARY (LOADING     1 )
    SUMMATION FORCE-X =          Ø.ØØ
    SUMMATION FORCE-Y =     -23184.ØØ
    SUMMATION FORCE-Z =          Ø.ØØ

   SUMMATION OF MOMENTS AROUND THE ORIGIN-
   MX=       1Ø4328.Ø1   MY=            Ø.ØØ   MZ=      -183Ø37.67

++ PROCESSING ELEMENT STIFFNESS MATRIX.                    16:  4:15
++ PROCESSING GLOBAL STIFFNESS MATRIX.                     16:  4:15
++ PROCESSING TRIANGULAR FACTORIZATION.                    16:  4:15
++ CALCULATING JOINT DISPLACEMENTS.                        16:  4:16
++ CALCULATING MEMBER  FORCES.                             16:  4:16


***TOTAL REACTION ( POUN FEET ) SUMMARY


LOADING     1

SUM-X=          Ø.ØØ   SUM-Y=     23184.ØØ   SUM-Z=          Ø.ØØ

SUMMATION OF MOMENTS AROUND ORIGIN-

MX=      -1Ø4327.98   MY=            Ø.ØØ   MZ=       183Ø37.69


************ END OF DATA FROM INTERNAL STORAGE ************


  28. PARAMETER
  29. CODE AISC
  3Ø. CHECK CODE ALL
```

STAAD-III CODE CHECKING - (AISC)
**********

ALL UNITS ARE - POUN FEET (UNLESS OTHERWISE NOTED)

| MEMBER | TABLE | RESULT/ FX | CRITICAL COND/ MY | RATIO/ MZ | LOADING/ LOCATION |
|---|---|---|---|---|---|
| 1 | ST W8X 15 | PASS | AISC- H1-3 | Ø.364 | 1 |
| | | Ø.ØØ | Ø.ØØ | 8541.38 | 2.75 |
| 2 | ST W8X 15 | PASS | AISC- H1-3 | Ø.391 | 1 |
| | | Ø.ØØ | Ø.ØØ | 9165.25 | 3.ØØ |
| 3 | ST W8X 15 | PASS | AISC- H1-3 | Ø.391 | 1 |
| | | Ø.ØØ | Ø.ØØ | -9165.25 | Ø.ØØ |
| 4 | ST W8X 15 | PASS | AISC- H1-3 | Ø.3Ø8 | 1 |
| | | Ø.ØØ | Ø.ØØ | -7214.Ø8 | 2.17 |
| 5 | ST W8X 15 | PASS | AISC- H1-3 | Ø.Ø29 | 1 |
| | | Ø.ØØ | Ø.ØØ | -673.92 | Ø.ØØ |
| 6 | ST W8X 15 | PASS | SHEAR -Y | Ø.Ø51 | 1 |
| | | Ø.ØØ | Ø.ØØ | Ø.ØØ | Ø.ØØ |
| 7 | ST W8X 15 | PASS | AISC- H1-3 | Ø.Ø29 | 1 |
| | | Ø.ØØ | Ø.ØØ | 676.65 | 4.ØØ |
| 8 | ST W8X 15 | PASS | AISC- H1-3 | Ø.338 | 1 |
| | | Ø.ØØ | Ø.ØØ | -7210.99 | 6.16 |
| 9 | ST W8X 15 | PASS | AISC- H1-3 | Ø.391 | 1 |
| | | Ø.ØØ | Ø.ØØ | 9160.24 | 2.75 |
| 1Ø | ST W8X 15 | PASS | AISC- H1-3 | Ø.391 | 1 |
| | | Ø.ØØ | Ø.ØØ | -9160.24 | Ø.ØØ |
| 11 | ST W8X 15 | PASS | AISC- H1-3 | Ø.364 | 1 |
| | | Ø.ØØ | Ø.ØØ | -8538.98 | Ø.ØØ |
| 12 | ST W8X 15 | PASS | SHEAR -Y | Ø.Ø51 | 1 |
| | | Ø.ØØ | Ø.ØØ | -17.22 | Ø.ØØ |
| 13 | ST W6X 12 | PASS | SHEAR -Y | Ø.145 | 1 |
| | | Ø.ØØ | Ø.ØØ | 17.22 | Ø.ØØ |
| 14 | ST W6X 12 | PASS | SHEAR -Y | Ø.145 | 1 |
| | | Ø.ØØ | Ø.ØØ | 17.22 | Ø.ØØ |
| 15 | ST W8X 15 | PASS | SHEAR -Y | Ø.Ø51 | 1 |
| | | Ø.ØØ | Ø.ØØ | -17.2Ø | Ø.ØØ |
| 16 | ST W8X 15 | PASS | SHEAR -Y | Ø.Ø51 | 1 |
| | | Ø.ØØ | Ø.ØØ | -Ø.Ø2 | Ø.ØØ |
| 17 | ST W8X 15 | PASS | AISC- H1-3 | Ø.3Ø8 | 1 |
| | | Ø.ØØ | Ø.ØØ | -7210.99 | 2.17 |
| 18 | ST W8X 15 | PASS | AISC- H1-3 | Ø.339 | 1 |
| | | Ø.ØØ | Ø.ØØ | 7214.Ø8 | Ø.ØØ |

********** END OF TABULATED RESULT OF DESIGN **********

31. STEEL TAKE OFF

STEEL TAKE-OFF

| PROFILE | LENGTH(FEET) | WEIGHT(POUN) |
|---|---|---|
| ST W8X 15 | 77.66 | 1170.976 |
| ST W6X 12 | 18.00 | 217.004 |
| | TOTAL = | 1387.98 |

********** END OF DATA FROM INTERNAL STORAGE **********

32. FINISH

********** END OF STAAD-III **********

**** DATE= NOV 16,1994 TIME= 16: 4:16 ****

```
**********************************************************
*       For questions on STAAD-III/ISDS, contact:        *
*              RESEARCH ENGINEERS, Inc at                *
*       Ph: (714) 974-2500   Fax:  (714) 974-4771        *
**********************************************************
```

SUBJECT

COMPUTATION

COMPUTED BY CHECKED BY DATE

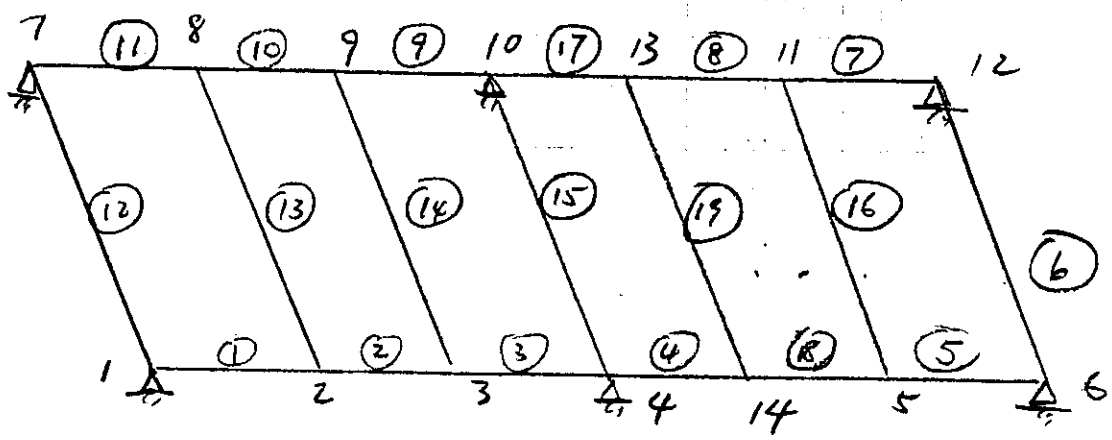


Determine Design Snow Loads for Upper & Lower Roofs
(EXISTING) (PROPOSE)

Where $P_g = 28$ psf

$\Delta H$ between Roofs = 10 inches

Low Roof:

$$P_f = 0.7\, C_e C_t\, I P_g$$

Where $P_g = 28$ psf $\quad C_e = 1.0$ – Table 18

$C_t = 1.2$ – Table 19

$I = 1.0$ CAT I

$$P_f = 0.7\,(1)(1.2)(1)(28) = 23.52 \text{ psf}$$

$\gamma$ = snow density lbs / ft³

$= 0.13\, P_g + 14$

$= 17.06$ psf

SUBJECT
COMPUTATION
COMPUTED BY CHECKED BY DATE

$h_b = P_f / \gamma = 23.52/19 = 1.24$ ft

$h_c = 10/12' - 1.24'$ ∵ The difference between the building is 10 in.

$\leq 0$ ft.

Since $h_c/h_b \leq 0.2$

∴ NO DRIFT SNOW LOAD CONSIDER

Therefore the loading for the STAIRWELL ROOF

= 23.52 psf (SNOW LOAD) + 23 psf (ROOF DEAD)

= 46.52 psf

Assume 4 FT SPAN FOR OVERALL

∴ The Loads for (12) & (6) member

= 2 ft × 46.52 lb/ft²

= 93.04 lb/ft

∴ The Loads for (13) (14) (15) (19) (16) member

= 4 ft × 46.52 lb/ft²

= 186.08 lb/ft

```
*****************************************************
*                                                   *
*            S T A A D - III                        *
*            Revision 19.Ø                          *
*            Proprietary Program of                 *
*            RESEARCH ENGINEERS, Inc.               *
*            Date=     NOV 17, 1994                 *
*            Time=      9:47:31                     *
*                                                   *
*       USER ID: U.S. Army Corps of Engineers       *
*****************************************************
```

```
 1. STAAD FLOOR FLOOR
 2. INPUT WIDTH 72
 3. UNIT FEET POUND
 4. JOINT COORDINATES
 5. 1 Ø. Ø. Ø.; 2 4. Ø. Ø.; 3 7.33 Ø. Ø.; 4 1Ø.67 Ø. Ø.; 5 16.736 Ø. Ø.
 6. 6 2Ø.83 Ø. Ø.; 7 Ø. Ø. 9.; 8 4. Ø. 9.; 9 7.33 Ø. 9.; 1Ø 1Ø.67 Ø. 9.
 7. 11 16.736 Ø. 9.; 12 2Ø.83 Ø. 9.; 13 13.65 Ø. 9.; 14 13.653 Ø. Ø.
 8. MEMBER INCIDENCES
 9. 1 1 2; 2 2 3; 3 3 4; 4 4 14; 5 5 6; 6 6 12; 7 12 11; 8 11 13; 9 1Ø 9
10. 1Ø 9 8; 11 8 7; 12 7 1; 13 8 2; 14 9 3; 15 1Ø 4; 16 11 5; 17 1Ø 13
11. 18 14 5; 19 13 14
12. MEMBER PROPERTY AMERICAN
13. 1 TO 3 5 7 TO 11 TABLE ST W8X15
14. 4 12 17 18 TABLE ST W8X15
15. 13 14 TABLE ST W6X12
16. 6 TABLE ST W8X15
17. 15 16 19 TABLE ST W6X12
18. CONSTANTS
19. E STEEL ALL
2Ø. SUPPORTS
21. 1 4 6 7 1Ø 12 PINNED
22. LOAD 1 DEAD
23. MEMBER LOAD
24. 6 12 UNI Y -93.Ø4
25. 13 TO 16 19 UNI Y -186.Ø8
26. PERFORM ANALYSIS PRINT LOAD DATA
```

```
      P R O B L E M   S T A T I S T I C S
      -----------------------------------

NUMBER OF JOINTS/MEMBER+ELEMENTS/SUPPORTS =    14/    19/     6
ORIGINAL/FINAL BAND-WIDTH =    1Ø/     2
TOTAL PRIMARY LOAD CASES  =     1, TOTAL DEGREES OF FREEDOM =     36
SIZE OF STIFFNESS MATRIX =      324 DOUBLE PREC. WORDS
REQUIRED DISK SPACE =   12.Ø3 MB, TOTAL EXMEM =  2.24 MB
```

LOADING 1 DEAD

MEMBER LOAD - UNIT POUN FEET

| MEMBER | UDL | | L1 | L2 | CON | L | LIN1 | LIN2 |
|---|---|---|---|---|---|---|---|---|
| 6 | -93.040 | Y | 0.00 | 9.00 | | | | |
| 12 | -93.040 | Y | 0.00 | 9.00 | | | | |
| 13 | -186.080 | Y | 0.00 | 9.00 | | | | |
| 14 | -186.080 | Y | 0.00 | 9.00 | | | | |
| 15 | -186.080 | Y | 0.00 | 9.00 | | | | |
| 16 | -186.080 | Y | 0.00 | 9.00 | | | | |
| 19 | -186.080 | Y | 0.00 | 9.00 | | | | |

++ PROCESSING ELEMENT STIFFNESS MATRIX. 9:47:33
++ PROCESSING GLOBAL STIFFNESS MATRIX. 9:47:33
++ PROCESSING TRIANGULAR FACTORIZATION. 9:47:33
++ CALCULATING JOINT DISPLACEMENTS. 9:47:33
++ CALCULATING MEMBER FORCES. 9:47:33

********** END OF DATA FROM INTERNAL STORAGE **********

27. PERFORM ANALYSIS PRINT STATICS CHECK

```
***TOTAL APPLIED LOAD ( POUN FEET ) SUMMARY (LOADING     1 )
     SUMMATION FORCE-X =          0.00
     SUMMATION FORCE-Y =     -10048.32
     SUMMATION FORCE-Z =          0.00

    SUMMATION OF MOMENTS AROUND THE ORIGIN-
    MX=        45217.44   MY=            0.00   MZ=      -105176.59

++ PROCESSING ELEMENT STIFFNESS MATRIX.                    9:47:34
++ PROCESSING GLOBAL STIFFNESS MATRIX.                     9:47:34
++ PROCESSING TRIANGULAR FACTORIZATION.                    9:47:34
++ CALCULATING JOINT DISPLACEMENTS.                        9:47:34
++ CALCULATING MEMBER  FORCES.                             9:47:34


***TOTAL REACTION ( POUN FEET ) SUMMARY


LOADING     1

SUM-X=          0.00   SUM-Y=     10048.32   SUM-Z=          0.00

SUMMATION OF MOMENTS AROUND ORIGIN-

MX=       -45217.45   MY=            0.00   MZ=       105176.61


************ END OF DATA FROM INTERNAL STORAGE ************

 28. PARAMETER
 29. CODE AISC
 30. CHECK CODE ALL
```

NED FORM 223
27 Sept 49

NEW ENGLAND DIVISION
CORPS OF ENGINEERS, U.S. ARMY



SUBJECT

COMPUTATION

COMPUTED BY CHECKED BY DATE

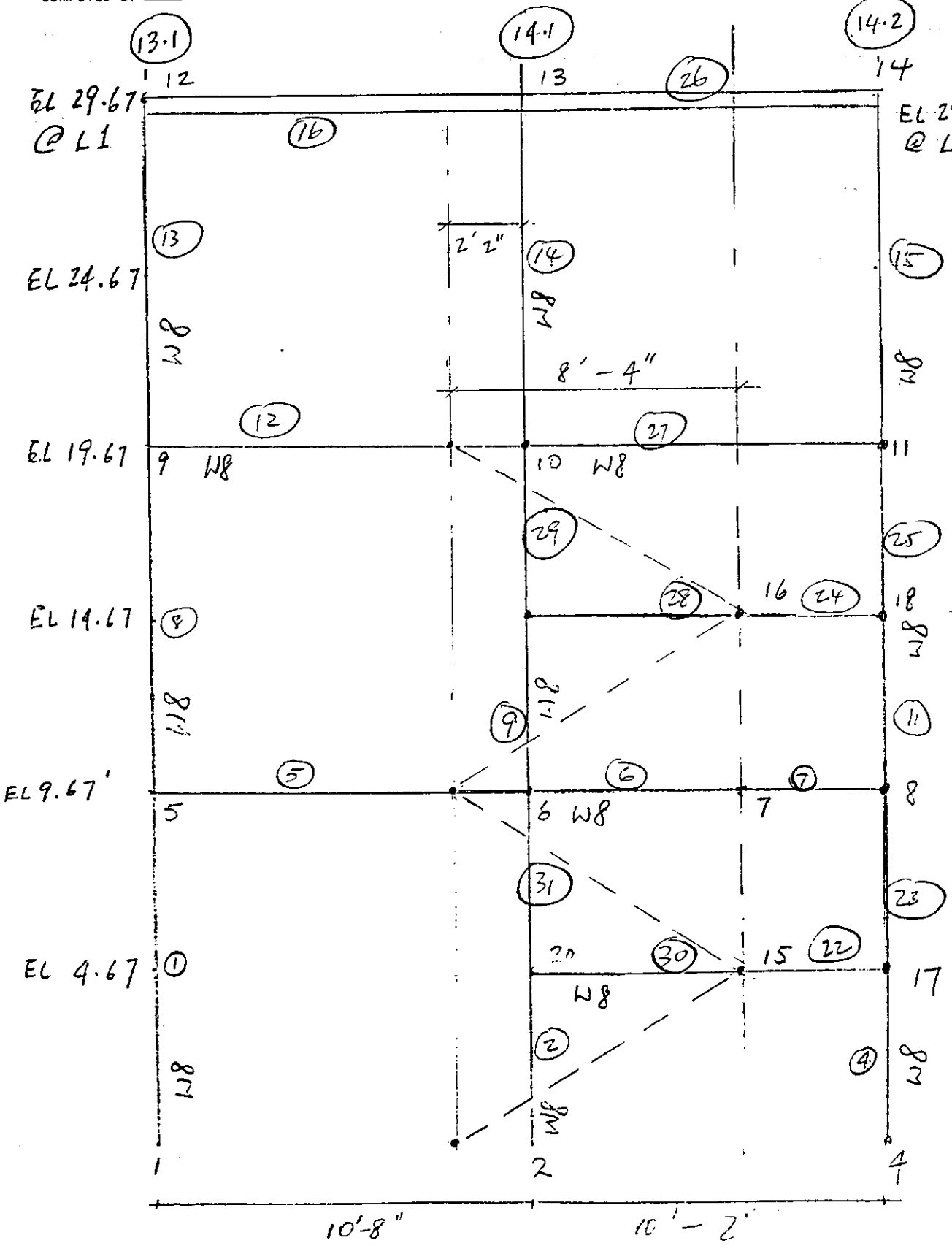


ELEVATION AT COLUMN LINE L1 & L2

SUBJECT

COMPUTATION

COMPUTED BY CHECKED BY DATE

Calculation the input loadings due to the weight of the STAIR :

(i) The wt of the STAIR (DEAD LOAD)
(Assume 3" Concrete thickness)

$= 3'' \times 4\ FT \times 10\ FT \times 115\ lb/FT^3$

$= 1150\ lbs$

(ii) Assume 100 psf LIVE LOAD

$= \underbrace{4\ FT \times 10\ FT}_{\text{SURFACE AREA}} \times 100\ PSF$

$= 4000\ lbs$

(iii) Assume SIMPLE SUPPORT BEAM CONDITION:

$= (1150 + 4000)/4\ lbs$

$= 1287.5\ lbs$

USING 2000 lbs AS JOINTS LOAD INPUTS
(CONSERVATIVE)

SUBJECT

COMPUTATION

COMPUTED BY CHECKED BY DATE

(A) LOADS INPUT DATA FOR DEAD

MEMBER (16) & (26)

= 9 ft/2 ( 46.52 lb/ft²)

= 209.34 lb/ft

MEMBER (12) & (27) (24) (7) (22) (5)

= 9 ft/2 ( 100 + 23 + 38 ) psf

= 724.5 lb/ft

(B) WIND LOAD

SEE PAGE (1)

(C) JOINT LOADS (15) (16) (21) (22)

FY − 2000 lbs (weight for the stairs)

STRUCTURE DATA

TYPE = PLANE

NJ = 21

NM = 26

NE = 0

NS = 3

NL = 3

XMAX= 25.0

YMAX= 30.0

ZMAX= 0.0

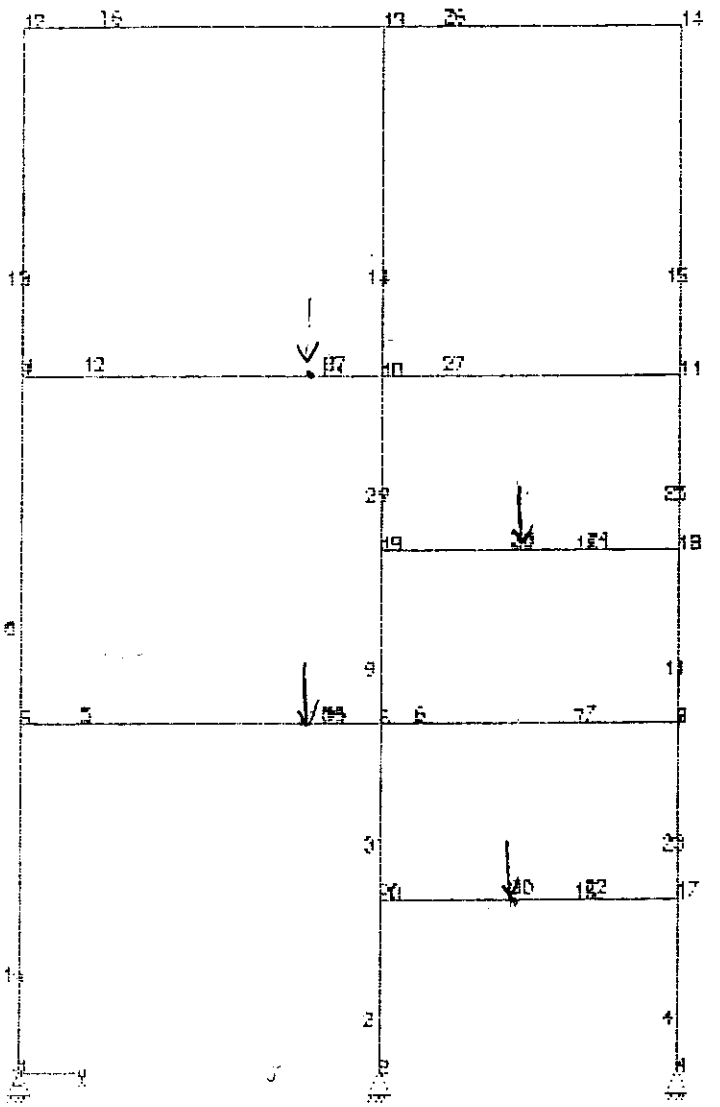


COMPANY: U.S. Army Corps of Engineers

S T A A D P L - P L O T (REV: 19.0 )

TITLE: STAIR

DATE: NOV 23, 1994

Pg 24

```
**************************************************
*                                                *
*            S T A A D - III                     *
*            Revision 19.0                       *
*            Proprietary Program of              *
*            RESEA  9: 9: 56ERS, Inc.            *
*            Date=    NOV 23, 1994               *
*            Time=     9: 9:46                   *
*                                                *
*       USER ID: U.S. Army Corps of Engineers    *
**************************************************
```

```
 1. STAAD PLANE STAIR
 2. INPUT WIDTH 72
 3. UNIT FEET KIP
 4. JOINT COORDINATES
 5. 1 0. 0. 0.; 2 13.67 0. 0.; 4 25. 0. 0.; 5 0. 10. 0.; 6 13.67 10. 0.
 6. 7 21. 10. 0.; 8 25. 10. 0.; 9 0. 20. 0.; 10 13.67 20. 0.; 11 25. 20. 0.
 7. 12 0. 30. 0.; 13 13.67 30. 0.; 14 25. 30. 0.; 15 21. 5. 0.
 8. 16 21. 15. 0.; 17 25. 5. 0.; 18 25. 15. 0.; 19 13.67 15. 0.
 9. 20 13.67 5. 0.; 21 11.5003 20. 0.; 22 11.5003 10. 0.
10. MEMBER INCIDENCES
11. 1 1 5; 2 2 20; 4 4 17; 5 5 22; 6 6 7; 7 7 8; 8 5 9; 9 6 19; 11 8 18
12. 12 9 21; 13 9 12; 14 10 13; 15 11 14; 16 12 13; 22 15 17; 23 17 8
13. 24 16 16; 25 18 11; 26 13 14; 27 10 11; 28 16 19; 29 19 10; 30 15 20
14. 31 20 6; 37 21 10; 38 22 6
15. MEMBER PROPERTY AMERICAN
16. 5 TO 7 12 16 22 24 26 TO 28 30 TABLE ST W8X15
17. 1 2 4 8 9 11 13 TO 15 23 25 29 31 TABLE ST W8X10
18. 37 38 TABLE ST W8X15
19. CONSTANTS
20. E STEEL ALL
21. POISSON STEEL ALL
22. SUPPORTS
23. 1 2 4 PINNED
24. UNIT FEET POUND
25. LOAD 1 DEAD
26. MEMBER LOAD
27. 16 26 UNI Y -209.34
28. 5 TO 7 22 24 UNI Y -724.5
29. 38 UNI Y -724.5
30. 12 UNI Y -724.5
31. 27 UNI Y -724.5
32. 37 UNI Y -724.5
33. 28 UNI Y -724.5
34. 30 UNI Y -724.5
35. JOINT LOAD
36. 15 16 FY -2000.
37. 21 22 FY -2000.
38. LOAD 2 WIND
39. MEMBER LOAD
40. 1 UNI GX 36.
41. 8 UNI GX 36. 0. 5. 0.
42. 8 UNI GX 41.76 5. 10. 0.
```

```
43. 13 UNI GX 41.76 0. 5. 0.
44. 13 UNI GX 44.5 5. 10. 0.
45. 4 11 23 25 UNI GX 20.16
46. 15 UNI GX 20.16
47. LOAD COMB 3 DL+WIND LOAD
48. 1 1. 2 1.
49. PERFORM ANALYSIS PRINT LOAD DATA
```

P R O B L E M  S T A T I S T I C S

```
NUMBER OF JOINTS/MEMBER+ELEMENTS/SUPPORTS =    21/   26/    3
ORIGINAL/FINAL BAND-WIDTH =   17/    4
TOTAL PRIMARY LOAD CASES  =    2, TOTAL DEGREES OF FREEDOM =    57
SIZE OF STIFFNESS MATRIX =     855 DOUBLE PREC. WORDS
REQUIRED DISK SPACE =   12.05 MB, TOTAL EXMEM =  2.24 MB
```

LOADING 1 DEAD

MEMBER LOAD - UNIT POUN FEET

| MEMBER | UDL | L1 | L2 | CON | L | LIN1 | LIN2 |
|---|---|---|---|---|---|---|---|
| 16 | -209.340 Y | 0.00 | 13.67 | | | | |
| 26 | -209.340 Y | 0.00 | 11.33 | | | | |
| 5 | -724.500 Y | 0.00 | 11.50 | | | | |
| 6 | -724.500 Y | 0.00 | 7.33 | | | | |
| 7 | -724.500 Y | 0.00 | 4.00 | | | | |
| 22 | -724.500 Y | 0.00 | 4.00 | | | | |
| 24 | -724.500 Y | 0.00 | 4.00 | | | | |
| 38 | -724.500 Y | 0.00 | 2.17 | | | | |
| 12 | -724.500 Y | 0.00 | 11.50 | | | | |
| 27 | -724.500 Y | 0.00 | 11.33 | | | | |
| 37 | -724.500 Y | 0.00 | 2.17 | | | | |
| 28 | -724.500 Y | 0.00 | 7.33 | | | | |
| 30 | -724.500 Y | 0.00 | 7.33 | | | | |

JOINT LOAD - UNIT POUN FEET

| JOINT | FORCE-X | FORCE-Y | FORCE-Z | MOM-X | MOM-Y | MOM-Z |
|---|---|---|---|---|---|---|
| 15 | 0.00 | -2000.00 | 0.00 | 0.00 | 0.00 | 0.00 |
| 16 | 0.00 | -2000.00 | 0.00 | 0.00 | 0.00 | 0.00 |
| 21 | 0.00 | -2000.00 | 0.00 | 0.00 | 0.00 | 0.00 |
| 22 | 0.00 | -2000.00 | 0.00 | 0.00 | 0.00 | 0.00 |

LOADING 2 WIND

MEMBER LOAD - UNIT POUN FEET

| MEMBER | UDL | L1 | L2 | CON | L | LIN1 | LIN2 |
|---|---|---|---|---|---|---|---|
| 1 | 36.000 GX | 0.00 | 10.00 | | | | |
| 8 | 36.000 GX | 0.00 | 5.00 | | | | |
| 8 | 41.760 GX | 5.00 | 10.00 | | | | |
| 13 | 41.760 GX | 0.00 | 5.00 | | | | |
| 13 | 44.500 GX | 5.00 | 10.00 | | | | |
| 4 | 20.160 GX | 0.00 | 5.00 | | | | |
| 11 | 20.160 GX | 0.00 | 5.00 | | | | |
| 23 | 20.160 GX | 0.00 | 5.00 | | | | |
| 25 | 20.160 GX | 0.00 | 5.00 | | | | |
| 15 | 20.160 GX | 0.00 | 10.00 | | | | |

++ PROCESSING ELEMENT STIFFNESS MATRIX. 9: 9:57
++ PROCESSING GLOBAL STIFFNESS MATRIX. 9: 9:57
++ PROCESSING TRIANGULAR FACTORIZATION. 9: 9:58

++ CALCULATING JOINT DISPLACEMENTS.
++ CALCULATING MEMBER FORCES.

LOAD COMBINATION NO. 3
DL+WIND LOAD

| LOADING- | 1. | 2. |
|---|---|---|
| FACTOR - | 1.00 | 1.00 |

********** END OF DATA FROM INTERNAL STORAGE **********

50. LOAD LIST 1 2 3
51. PRINT ANALYSIS RESULTS

JOINT DISPLACEMENT (INCH RADIANS) STRUCTURE TYPE = PLANE

| JOINT | LOAD | X-TRANS | Y-TRANS | Z-TRANS | X-ROTAN | Y-ROTAN | Z-ROTAN |
|---|---|---|---|---|---|---|---|
| 1 | 1 | 0.00000 | 0.00000 | 0.00000 | 0.00000 | 0.00000 | 0.00102 |
| | 2 | 0.00000 | 0.00000 | 0.00000 | 0.00000 | 0.00000 | -0.00208 |
| | 3 | 0.00000 | 0.00000 | 0.00000 | 0.00000 | 0.00000 | -0.00106 |
| 2 | 1 | 0.00000 | 0.00000 | 0.00000 | 0.00000 | 0.00000 | 0.00029 |
| | 2 | 0.00000 | 0.00000 | 0.00000 | 0.00000 | 0.00000 | -0.00240 |
| | 3 | 0.00000 | 0.00000 | 0.00000 | 0.00000 | 0.00000 | -0.00212 |
| 4 | 1 | 0.00000 | 0.00000 | 0.00000 | 0.00000 | 0.00000 | -0.00069 |
| | 2 | 0.00000 | 0.00000 | 0.00000 | 0.00000 | 0.00000 | -0.00243 |
| | 3 | 0.00000 | 0.00000 | 0.00000 | 0.00000 | 0.00000 | -0.00312 |
| 5 | 1 | -0.01782 | -0.01607 | 0.00000 | 0.00000 | 0.00000 | -0.00165 |
| | 2 | 0.17873 | 0.00068 | 0.00000 | 0.00000 | 0.00000 | -0.00053 |
| | 3 | 0.16091 | -0.01539 | 0.00000 | 0.00000 | 0.00000 | -0.00219 |
| 6 | 1 | -0.01671 | -0.04529 | 0.00000 | 0.00000 | 0.00000 | 0.00103 |
| | 2 | 0.17829 | 0.00133 | 0.00000 | 0.00000 | 0.00000 | -0.00040 |
| | 3 | 0.16158 | -0.04396 | 0.00000 | 0.00000 | 0.00000 | 0.00063 |
| 7 | 1 | -0.01647 | -0.06600 | 0.00000 | 0.00000 | 0.00000 | 0.00050 |
| | 2 | 0.17822 | 0.00636 | 0.00000 | 0.00000 | 0.00000 | 0.00010 |
| | 3 | 0.16175 | -0.05963 | 0.00000 | 0.00000 | 0.00000 | 0.00060 |
| 8 | 1 | -0.01633 | -0.02360 | 0.00000 | 0.00000 | 0.00000 | 0.00048 |
| | 2 | 0.17818 | -0.00201 | 0.00000 | 0.00000 | 0.00000 | -0.00059 |
| | 3 | 0.16185 | -0.02561 | 0.00000 | 0.00000 | 0.00000 | -0.00011 |
| 9 | 1 | -0.03374 | -0.02514 | 0.00000 | 0.00000 | 0.00000 | -0.00147 |
| | 2 | 0.24741 | 0.00097 | 0.00000 | 0.00000 | 0.00000 | -0.00030 |
| | 3 | 0.21367 | -0.02417 | 0.00000 | 0.00000 | 0.00000 | -0.00177 |
| 10 | 1 | -0.03438 | -0.06798 | 0.00000 | 0.00000 | 0.00000 | 0.00081 |
| | 2 | 0.24688 | 0.00166 | 0.00000 | 0.00000 | 0.00000 | -0.00020 |
| | 3 | 0.21250 | -0.06632 | 0.00000 | 0.00000 | 0.00000 | 0.00061 |
| 11 | 1 | -0.03582 | -0.03441 | 0.00000 | 0.00000 | 0.00000 | 0.00058 |
| | 2 | 0.24677 | -0.00263 | 0.00000 | 0.00000 | 0.00000 | -0.00034 |
| | 3 | 0.21095 | -0.03704 | 0.00000 | 0.00000 | 0.00000 | 0.00024 |
| 12 | 1 | -0.03139 | -0.02715 | 0.00000 | 0.00000 | 0.00000 | -0.00054 |
| | 2 | 0.28743 | 0.00104 | 0.00000 | 0.00000 | 0.00000 | -0.00006 |
| | 3 | 0.25604 | -0.02611 | 0.00000 | 0.00000 | 0.00000 | -0.00060 |
| 13 | 1 | -0.03228 | -0.07161 | 0.00000 | 0.00000 | 0.00000 | 0.00002 |
| | 2 | 0.28729 | 0.00168 | 0.00000 | 0.00000 | 0.00000 | -0.00010 |
| | 3 | 0.25501 | -0.06993 | 0.00000 | 0.00000 | 0.00000 | -0.00008 |
| 14 | 1 | -0.03270 | -0.03608 | 0.00000 | 0.00000 | 0.00000 | 0.00048 |
| | 2 | 0.28731 | -0.00272 | 0.00000 | 0.00000 | 0.00000 | -0.00011 |
| | 3 | 0.25462 | -0.03880 | 0.00000 | 0.00000 | 0.00000 | 0.00037 |
| 15 | 1 | 0.00617 | -0.10814 | 0.00000 | 0.00000 | 0.00000 | 0.00120 |
| | 2 | 0.11848 | 0.00716 | 0.00000 | 0.00000 | 0.00000 | 0.00029 |
| | 3 | 0.12465 | -0.10098 | 0.00000 | 0.00000 | 0.00000 | 0.00149 |
| 16 | 1 | -0.02673 | -0.12791 | 0.00000 | 0.00000 | 0.00000 | 0.00136 |
| | 2 | 0.21655 | 0.00154 | 0.00000 | 0.00000 | 0.00000 | 0.00011 |
| | 3 | 0.18982 | -0.12637 | 0.00000 | 0.00000 | 0.00000 | 0.00147 |
| 17 | 1 | 0.00627 | -0.01371 | 0.00000 | 0.00000 | 0.00000 | 0.00126 |
| | 2 | 0.11846 | -0.00129 | 0.00000 | 0.00000 | 0.00000 | -0.00094 |
| | 3 | 0.12473 | -0.01501 | 0.00000 | 0.00000 | 0.00000 | 0.00032 |

JOINT DISPLACEMENT (INCH RADIANS) STRUCTURE TYPE = PLANE

| JOINT | LOAD | X-TRANS | Y-TRANS | Z-TRANS | X-ROTAN | Y-ROTAN | Z-ROTAN |
|---|---|---|---|---|---|---|---|
| 18 | 1 | -0.02667 | -0.03098 | 0.00000 | 0.00000 | 0.00000 | 0.00114 |
| | 2 | 0.21658 | -0.00244 | 0.00000 | 0.00000 | 0.00000 | -0.00040 |
| | 3 | 0.18991 | -0.03341 | 0.00000 | 0.00000 | 0.00000 | 0.00074 |
| 19 | 1 | -0.02685 | -0.05823 | 0.00000 | 0.00000 | 0.00000 | -0.00100 |
| | 2 | 0.21650 | 0.00161 | 0.00000 | 0.00000 | 0.00000 | -0.00046 |
| | 3 | 0.18965 | -0.05661 | 0.00000 | 0.00000 | 0.00000 | -0.00146 |
| 20 | 1 | 0.00599 | -0.02430 | 0.00000 | 0.00000 | 0.00000 | -0.00100 |
| | 2 | 0.11852 | 0.00095 | 0.00000 | 0.00000 | 0.00000 | -0.00098 |
| | 3 | 0.12451 | -0.02335 | 0.00000 | 0.00000 | 0.00000 | -0.00198 |
| 21 | 1 | -0.03428 | -0.12036 | 0.00000 | 0.00000 | 0.00000 | 0.00218 |
| | 2 | 0.24696 | 0.00414 | 0.00000 | 0.00000 | 0.00000 | -0.00002 |
| | 3 | 0.21269 | -0.11622 | 0.00000 | 0.00000 | 0.00000 | 0.00217 |
| 22 | 1 | -0.01689 | -0.10335 | 0.00000 | 0.00000 | 0.00000 | 0.00239 |
| | 2 | 0.17836 | 0.00657 | 0.00000 | 0.00000 | 0.00000 | -0.00005 |
| | 3 | 0.16147 | -0.09679 | 0.00000 | 0.00000 | 0.00000 | 0.00234 |

SUPPORT REACTIONS -UNIT POUN FEET  STRUCTURE TYPE = PLANE

| JOINT | LOAD | FORCE-X | FORCE-Y | FORCE-Z | MOM-X | MOM-Y | MOM Z |
|---|---|---|---|---|---|---|---|
| 1 | 1 | 331.38 | 11496.27 | 0.00 | 0.00 | 0.00 | 0.00 |
| | 2 | -311.21 | -487.91 | 0.00 | 0.00 | 0.00 | 0.00 |
| | 3 | 20.17 | 11008.36 | 0.00 | 0.00 | 0.00 | 0.00 |
| 2 | 1 | 636.36 | 34758.68 | 0.00 | 0.00 | 0.00 | 0.00 |
| | 2 | -703.45 | -1358.78 | 0.00 | 0.00 | 0.00 | 0.00 |
| | 3 | -67.09 | 33399.90 | 0.00 | 0.00 | 0.00 | 0.00 |
| 4 | 1 | -967.74 | 19620.72 | 0.00 | 0.00 | 0.00 | 0.00 |
| | 2 | -770.24 | 1846.69 | 0.00 | 0.00 | 0.00 | 0.00 |
| | 3 | -1737.98 | 21467.42 | 0.00 | 0.00 | 0.00 | 0.00 |

MEMBER END FORCES  STRUCTURE TYPE = PLANE

ALL UNITS ARE -- POUN FEET

| MEMB | LOAD | JT | AXIAL | SHEAR-Y | SHEAR-Z | TORSION | MOM-Y | MOM-Z |
|---|---|---|---|---|---|---|---|---|
| 1 | 1 | 1 | 11496.27 | -331.38 | 0.00 | 0.00 | 0.00 | 0.00 |
| | | 5 | -11496.27 | 331.38 | 0.00 | 0.00 | 0.00 | -3313.84 |
| | 2 | 1 | -487.91 | 311.21 | 0.00 | 0.00 | 0.00 | 0.00 |
| | | 5 | 487.91 | 48.79 | 0.00 | 0.00 | 0.00 | 1312.14 |
| | 3 | 1 | 11008.36 | -20.17 | 0.00 | 0.00 | 0.00 | 0.00 |
| | | 5 | -11008.36 | 380.17 | 0.00 | 0.00 | 0.00 | -2001.71 |
| 2 | 1 | 2 | 34758.68 | -636.36 | 0.00 | 0.00 | 0.00 | 0.00 |
| | | 20 | -34758.68 | 636.36 | 0.00 | 0.00 | 0.00 | -3181.79 |
| | 2 | 2 | -1358.78 | 703.45 | 0.00 | 0.00 | 0.00 | 0.00 |
| | | 20 | 1358.78 | -703.45 | 0.00 | 0.00 | 0.00 | 3517.24 |
| | 3 | 2 | 33399.90 | 67.09 | 0.00 | 0.00 | 0.00 | 0.00 |
| | | 20 | -33399.90 | -67.09 | 0.00 | 0.00 | 0.00 | 335.45 |
| 4 | 1 | 4 | 19620.72 | 967.74 | 0.00 | 0.00 | 0.00 | 0.00 |
| | | 17 | -19620.72 | -967.74 | 0.00 | 0.00 | 0.00 | 4838.71 |
| | 2 | 4 | 1846.69 | 770.24 | 0.00 | 0.00 | 0.00 | 0.00 |
| | | 17 | -1846.69 | -669.44 | 0.00 | 0.00 | 0.00 | 3599.19 |
| | 3 | 4 | 21467.42 | 1737.98 | 0.00 | 0.00 | 0.00 | 0.00 |
| | | 17 | -21467.42 | -1637.18 | 0.00 | 0.00 | 0.00 | 8437.91 |
| 5 | 1 | 5 | -871.82 | 5010.64 | 0.00 | 0.00 | 0.00 | 9441.75 |
| | | 22 | 871.82 | 3323.29 | 0.00 | 0.00 | 0.00 | 263.02 |
| | 2 | 5 | 344.81 | -283.64 | 0.00 | 0.00 | 0.00 | -2034.66 |
| | | 22 | -344.81 | 283.64 | 0.00 | 0.00 | 0.00 | -1228.04 |
| | 3 | 5 | -527.01 | 4727.00 | 0.00 | 0.00 | 0.00 | 7407.09 |
| | | 22 | 527.01 | 3606.93 | 0.00 | 0.00 | 0.00 | -965.02 |
| 6 | 1 | 6 | -359.74 | 4623.05 | 0.00 | 0.00 | 0.00 | 11154.16 |
| | | 7 | 359.74 | 687.53 | 0.00 | 0.00 | 0.00 | 3269.53 |
| | 2 | 6 | 104.93 | -409.67 | 0.00 | 0.00 | 0.00 | -2152.86 |
| | | 7 | -104.93 | 409.67 | 0.00 | 0.00 | 0.00 | -850.05 |
| | 3 | 6 | -254.80 | 4213.38 | 0.00 | 0.00 | 0.00 | 9001.30 |
| | | 7 | 254.80 | 1097.20 | 0.00 | 0.00 | 0.00 | 2419.48 |
| 7 | 1 | 7 | -359.73 | -687.53 | 0.00 | 0.00 | 0.00 | -3269.53 |
| | | 8 | 359.73 | 3585.53 | 0.00 | 0.00 | 0.00 | -5276.59 |
| | 2 | 7 | 104.94 | -409.67 | 0.00 | 0.00 | 0.00 | 850.05 |
| | | 8 | -104.94 | 409.67 | 0.00 | 0.00 | 0.00 | -2488.75 |
| | 3 | 7 | -254.79 | -1097.21 | 0.00 | 0.00 | 0.00 | -2419.48 |
| | | 8 | 254.79 | 3995.21 | 0.00 | 0.00 | 0.00 | -7765.34 |
| 8 | 1 | 5 | 6485.63 | -1203.20 | 0.00 | 0.00 | 0.00 | -6127.90 |
| | | 9 | -6485.63 | 1203.20 | 0.00 | 0.00 | 0.00 | -5904.13 |
| | 2 | 5 | -204.27 | 296.03 | 0.00 | 0.00 | 0.00 | 722.52 |
| | | 9 | 204.27 | 92.77 | 0.00 | 0.00 | 0.00 | 365.77 |
| | 3 | 5 | 6281.36 | -907.17 | 0.00 | 0.00 | 0.00 | -5405.38 |
| | | 9 | -6281.36 | 1295.97 | 0.00 | 0.00 | 0.00 | -5538.35 |

MEMBER END FORCES  STRUCTURE TYPE = PLANE

ALL UNITS ARE -- POUN FEET

| MEMB | LOAD | JT | AXIAL | SHEAR-Y | SHEAR-Z | TORSION | MOM-Y | MOM-Z |
|---|---|---|---|---|---|---|---|---|
| 9 | 1 | 6 | 18514.36 | -387.46 | 0.00 | 0.00 | 0.00 | 1553.85 |
| | | 19 | -18514.36 | 387.46 | 0.00 | 0.00 | 0.00 | -3491.15 |
| | 2 | 6 | -411.23 | 519.15 | 0.00 | 0.00 | 0.00 | 1371.92 |
| | | 19 | 411.23 | -519.15 | 0.00 | 0.00 | 0.00 | 1223.82 |
| | 3 | 6 | 18103.12 | 131.69 | 0.00 | 0.00 | 0.00 | 2925.76 |
| | | 19 | -18103.12 | -131.69 | 0.00 | 0.00 | 0.00 | -2267.33 |
| 11 | 1 | 8 | 10554.60 | 1590.66 | 0.00 | 0.00 | 0.00 | 3161.83 |
| | | 18 | -10554.60 | -1590.66 | 0.00 | 0.00 | 0.00 | 4791.49 |
| | 2 | 8 | 615.51 | 408.12 | 0.00 | 0.00 | 0.00 | 691.23 |
| | | 18 | -615.51 | -307.32 | 0.00 | 0.00 | 0.00 | 1097.39 |
| | 3 | 8 | 11170.11 | 1998.79 | 0.00 | 0.00 | 0.00 | 3853.06 |
| | | 18 | -11170.11 | -1897.99 | 0.00 | 0.00 | 0.00 | 5888.88 |
| 12 | 1 | 9 | 504.00 | 5047.79 | 0.00 | 0.00 | 0.00 | 9981.24 |
| | | 21 | -504.00 | 3286.14 | 0.00 | 0.00 | 0.00 | 150.90 |
| | 2 | 9 | 412.48 | -153.00 | 0.00 | 0.00 | 0.00 | -1116.07 |
| | | 21 | -412.48 | 153.00 | 0.00 | 0.00 | 0.00 | -643.84 |
| | 3 | 9 | 916.48 | 4894.79 | 0.00 | 0.00 | 0.00 | 8865.17 |
| | | 21 | -916.48 | 3439.13 | 0.00 | 0.00 | 0.00 | -492.94 |
| 13 | 1 | 9 | 1437.84 | -699.20 | 0.00 | 0.00 | 0.00 | -4077.11 |
| | | 12 | -1437.84 | 699.20 | 0.00 | 0.00 | 0.00 | -2914.91 |
| | 2 | 9 | -51.28 | 319.71 | 0.00 | 0.00 | 0.00 | 750.30 |
| | | 12 | 51.28 | 111.59 | 0.00 | 0.00 | 0.00 | 324.51 |
| | 3 | 9 | 1386.57 | -379.50 | 0.00 | 0.00 | 0.00 | -3326.82 |
| | | 12 | -1386.57 | 810.80 | 0.00 | 0.00 | 0.00 | -2590.40 |
| 14 | 1 | 10 | 2598.76 | 304.71 | 0.00 | 0.00 | 0.00 | 2012.21 |
| | | 13 | -2598.76 | -304.71 | 0.00 | 0.00 | 0.00 | 1034.93 |
| | 2 | 10 | -12.35 | 132.85 | 0.00 | 0.00 | 0.00 | 602.22 |
| | | 13 | 12.35 | -132.85 | 0.00 | 0.00 | 0.00 | 726.31 |
| | 3 | 10 | 2586.41 | 437.57 | 0.00 | 0.00 | 0.00 | 2614.43 |
| | | 13 | -2586.41 | -437.57 | 0.00 | 0.00 | 0.00 | 1761.24 |
| 15 | 1 | 11 | 1196.90 | 394.49 | 0.00 | 0.00 | 0.00 | 2036.20 |
| | | 14 | -1196.90 | -394.49 | 0.00 | 0.00 | 0.00 | 1908.68 |
| | 2 | 11 | 63.63 | 180.34 | 0.00 | 0.00 | 0.00 | 424.39 |
| | | 14 | -63.63 | 21.26 | 0.00 | 0.00 | 0.00 | 371.02 |
| | 3 | 11 | 1260.53 | 574.83 | 0.00 | 0.00 | 0.00 | 2460.58 |
| | | 14 | -1260.53 | -373.23 | 0.00 | 0.00 | 0.00 | 2279.71 |
| 16 | 1 | 12 | 699.21 | 1437.84 | 0.00 | 0.00 | 0.00 | 2914.91 |
| | | 13 | -699.21 | 1423.83 | 0.00 | 0.00 | 0.00 | -2819.15 |
| | 2 | 12 | 111.58 | -51.28 | 0.00 | 0.00 | 0.00 | -324.51 |
| | | 13 | -111.58 | 51.28 | 0.00 | 0.00 | 0.00 | -376.43 |
| | 3 | 12 | 810.79 | 1386.57 | 0.00 | 0.00 | 0.00 | 2590.40 |
| | | 13 | -810.79 | 1475.11 | 0.00 | 0.00 | 0.00 | -3195.58 |
| 22 | 1 | 15 | -263.19 | -2582.59 | 0.00 | 0.00 | 0.00 | -7247.77 |
| | | 17 | 263.19 | 5480.59 | 0.00 | 0.00 | 0.00 | -8878.59 |

MEMBER END FORCES  STRUCTURE TYPE = PLANE

ALL UNITS ARE -- POUN FEET

| MEMB | LOAD | JT | AXIAL | SHEAR-Y | SHEAR-Z | TORSION | MOM-Y | MOM-Z |
|---|---|---|---|---|---|---|---|---|
| | 2 | 15 | 55.61 | -821.51 | 0.00 | 0.00 | 0.00 | 1332.81 |
| | | 17 | -55.61 | 821.51 | 0.00 | 0.00 | 0.00 | -4618.85 |
| | 3 | 15 | -207.57 | -3404.10 | 0.00 | 0.00 | 0.00 | -5914.96 |
| | | 17 | 207.57 | 6302.10 | 0.00 | 0.00 | 0.00 | -13497.45 |
| 23 | 1 | 17 | 14140.13 | 1230.93 | 0.00 | 0.00 | 0.00 | 4039.88 |
| | | 8 | -14140.13 | -1230.93 | 0.00 | 0.00 | 0.00 | 2114.76 |
| | 2 | 17 | 1025.18 | 613.84 | 0.00 | 0.00 | 0.00 | 1019.66 |
| | | 8 | -1025.18 | -513.04 | 0.00 | 0.00 | 0.00 | 1797.52 |
| | 3 | 17 | 15165.31 | 1844.76 | 0.00 | 0.00 | 0.00 | 5059.54 |
| | | 8 | -15165.31 | -1743.96 | 0.00 | 0.00 | 0.00 | 3912.28 |
| 24 | 1 | 16 | -169.69 | -2743.55 | 0.00 | 0.00 | 0.00 | -6883.68 |
| | | 18 | 169.69 | 5641.55 | 0.00 | 0.00 | 0.00 | -9886.53 |
| | 2 | 16 | -77.56 | -345.24 | 0.00 | 0.00 | 0.00 | 523.29 |
| | | 18 | 77.56 | 345.24 | 0.00 | 0.00 | 0.00 | -1904.26 |
| | 3 | 16 | -247.26 | -3088.80 | 0.00 | 0.00 | 0.00 | -6360.39 |
| | | 18 | 247.26 | 5986.79 | 0.00 | 0.00 | 0.00 | -11790.79 |
| 25 | 1 | 18 | 4913.04 | 1760.35 | 0.00 | 0.00 | 0.00 | 5095.04 |
| | | 11 | -4913.04 | -1760.35 | 0.00 | 0.00 | 0.00 | 3706.73 |
| | 2 | 18 | 270.26 | 384.94 | 0.00 | 0.00 | 0.00 | 806.88 |
| | | 11 | -270.26 | -284.14 | 0.00 | 0.00 | 0.00 | 865.82 |
| | 3 | 18 | 5183.31 | 2145.29 | 0.00 | 0.00 | 0.00 | 5901.92 |
| | | 11 | -5183.31 | -2044.49 | 0.00 | 0.00 | 0.00 | 4572.55 |
| 26 | 1 | 13 | 394.49 | 1174.93 | 0.00 | 0.00 | 0.00 | 1784.22 |
| | | 14 | -394.49 | 1196.90 | 0.00 | 0.00 | 0.00 | -1908.68 |
| | 2 | 13 | -21.31 | -63.63 | 0.00 | 0.00 | 0.00 | -349.88 |
| | | 14 | 21.31 | 63.63 | 0.00 | 0.00 | 0.00 | -371.02 |
| | 3 | 13 | 373.18 | 1111.30 | 0.00 | 0.00 | 0.00 | 1434.34 |
| | | 14 | -373.18 | 1260.52 | 0.00 | 0.00 | 0.00 | -2279.70 |
| 27 | 1 | 10 | 1365.86 | 4492.44 | 0.00 | 0.00 | 0.00 | 10140.58 |
| | | 11 | -1365.86 | 3716.15 | 0.00 | 0.00 | 0.00 | -5742.93 |
| | 2 | 10 | 103.79 | -206.64 | 0.00 | 0.00 | 0.00 | -1050.99 |
| | | 11 | -103.79 | 206.64 | 0.00 | 0.00 | 0.00 | -1290.21 |
| | 3 | 10 | 1469.66 | 4285.80 | 0.00 | 0.00 | 0.00 | 9089.59 |
| | | 11 | -1469.66 | 3922.79 | 0.00 | 0.00 | 0.00 | -7033.14 |
| 28 | 1 | 16 | -169.69 | 743.55 | 0.00 | 0.00 | 0.00 | -6883.68 |
| | | 19 | 169.69 | 4567.03 | 0.00 | 0.00 | 0.00 | -7129.36 |
| | 2 | 16 | -77.60 | 345.24 | 0.00 | 0.00 | 0.00 | 523.29 |
| | | 19 | 77.60 | -345.24 | 0.00 | 0.00 | 0.00 | 2007.33 |
| | 3 | 16 | -247.29 | 1088.80 | 0.00 | 0.00 | 0.00 | -6360.39 |
| | | 19 | 247.29 | 4221.79 | 0.00 | 0.00 | 0.00 | -5122.03 |
| 29 | 1 | 19 | 13947.31 | -557.15 | 0.00 | 0.00 | 0.00 | -3638.20 |
| | | 10 | -13947.31 | 557.15 | 0.00 | 0.00 | 0.00 | 852.45 |
| | 2 | 19 | -65.99 | 441.53 | 0.00 | 0.00 | 0.00 | 783.51 |
| | | 10 | 65.99 | -441.53 | 0.00 | 0.00 | 0.00 | 1424.15 |

MEMBER END FORCES  STRUCTURE TYPE = PLANE

ALL UNITS ARE -- POUN FEET

| MEMB | LOAD | JT | AXIAL | SHEAR-Y | SHEAR-Z | TORSION | MOM-Y | MOM-Z |
|---|---|---|---|---|---|---|---|---|
| | 3 | 19 | 13881.32 | -115.62 | 0.00 | 0.00 | 0.00 | -2854.70 |
| | | 10 | -13881.32 | 115.62 | 0.00 | 0.00 | 0.00 | 2276.60 |
| 30 | 1 | 15 | -263.18 | 582.59 | 0.00 | 0.00 | 0.00 | -7247.77 |
| | | 20 | 263.18 | 4727.99 | 0.00 | 0.00 | 0.00 | -7945.13 |
| | 2 | 15 | 55.60 | 821.51 | 0.00 | 0.00 | 0.00 | 1332.81 |
| | | 20 | -55.60 | -821.51 | 0.00 | 0.00 | 0.00 | 4688.85 |
| | 3 | 15 | -207.58 | 1404.10 | 0.00 | 0.00 | 0.00 | -5914.95 |
| | | 20 | 207.58 | 3906.48 | 0.00 | 0.00 | 0.00 | -3256.27 |
| 31 | 1 | 20 | 30030.69 | -899.54 | 0.00 | 0.00 | 0.00 | -4763.34 |
| | | 6 | -30030.69 | 899.54 | 0.00 | 0.00 | 0.00 | 265.62 |
| | 2 | 20 | -537.27 | 759.05 | 0.00 | 0.00 | 0.00 | 1171.62 |
| | | 6 | 537.27 | -759.05 | 0.00 | 0.00 | 0.00 | 2623.64 |
| | 3 | 20 | 29493.42 | -140.49 | 0.00 | 0.00 | 0.00 | -3591.72 |
| | | 6 | -29493.42 | 140.49 | 0.00 | 0.00 | 0.00 | 2889.26 |
| 37 | 1 | 21 | 504.01 | -5286.14 | 0.00 | 0.00 | 0.00 | -150.90 |
| | | 10 | -504.01 | 6856.13 | 0.00 | 0.00 | 0.00 | -13005.24 |
| | 2 | 21 | 412.31 | -153.00 | 0.00 | 0.00 | 0.00 | 643.84 |
| | | 10 | -412.31 | 153.00 | 0.00 | 0.00 | 0.00 | -975.38 |
| | 3 | 21 | 916.32 | -5439.13 | 0.00 | 0.00 | 0.00 | 492.94 |
| | | 10 | -916.32 | 7009.12 | 0.00 | 0.00 | 0.00 | -13980.63 |
| 38 | 1 | 22 | -871.81 | -5323.29 | 0.00 | 0.00 | 0.00 | -263.03 |
| | | 6 | 871.81 | 6893.28 | 0.00 | 0.00 | 0.00 | -12973.63 |
| | 2 | 22 | 344.81 | -283.64 | 0.00 | 0.00 | 0.00 | 1228.04 |
| | | 6 | -344.81 | 283.64 | 0.00 | 0.00 | 0.00 | -1842.69 |
| | 3 | 22 | -527.00 | -5606.93 | 0.00 | 0.00 | 0.00 | 965.02 |
| | | 6 | 527.00 | 7176.92 | 0.00 | 0.00 | 0.00 | -14816.32 |

********** END OF LATEST ANALYSIS RESULT **********

52. PERFORM ANALYSIS PRINT STATICS CHECK

```
***TOTAL APPLIED LOAD ( POUN FEET ) SUMMARY (LOADING     1 )
    SUMMATION FORCE-X =          Ø.ØØ
    SUMMATION FORCE-Y =     -65875.66
    SUMMATION FORCE-Z =          Ø.ØØ

   SUMMATION OF MOMENTS AROUND THE ORIGIN-
   MX=            Ø.ØØ  MY=            Ø.ØØ  MZ=      -965669.13


***TOTAL APPLIED LOAD ( POUN FEET ) SUMMARY (LOADING     2 )
    SUMMATION FORCE-X =      1784.9Ø
    SUMMATION FORCE-Y =          Ø.ØØ
    SUMMATION FORCE-Z =          Ø.ØØ

   SUMMATION OF MOMENTS AROUND THE ORIGIN-
   MX=            Ø.ØØ  MY=            Ø.ØØ  MZ=       -27592.75

++ PROCESSING ELEMENT STIFFNESS MATRIX.                    9:1Ø: Ø
++ PROCESSING GLOBAL STIFFNESS MATRIX.                     9:1Ø: Ø
++ PROCESSING TRIANGULAR FACTORIZATION.                    9:1Ø: Ø
++ CALCULATING JOINT DISPLACEMENTS.                        9:1Ø: Ø
++ CALCULATING MEMBER  FORCES.                             9:1Ø: Ø


***TOTAL REACTION ( POUN FEET ) SUMMARY


LOADING     1

SUM-X=         Ø.ØØ  SUM-Y=     65875.68  SUM-Z=         Ø.ØØ

SUMMATION OF MOMENTS AROUND ORIGIN-

MX=            Ø.ØØ  MY=            Ø.ØØ  MZ=       965669.38


LOADING     2

SUM-X=     -1784.9Ø  SUM-Y=         Ø.ØØ  SUM-Z=         Ø.ØØ

SUMMATION OF MOMENTS AROUND ORIGIN-

MX=            Ø.ØØ  MY=            Ø.ØØ  MZ=        27592.76


************ END OF DATA FROM INTERNAL STORAGE ************


 53. PERFORM ANALYSIS PRINT STATICS LOAD
```

***TOTAL APPLIED LOAD ( POUN FEET ) SUMMARY (LOADING 1 )
SUMMATION FORCE-X = Ø.ØØ
SUMMATION FORCE-Y = -65875.66
SUMMATION FORCE-Z = Ø.ØØ

SUMMATION OF MOMENTS AROUND THE ORIGIN-
MX= Ø.ØØ MY= Ø.ØØ MZ= -965669.13

***TOTAL APPLIED LOAD ( POUN FEET ) SUMMARY (LOADING 2 )
SUMMATION FORCE-X = 1784.9Ø
SUMMATION FORCE-Y = Ø.ØØ
SUMMATION FORCE-Z = Ø.ØØ

SUMMATION OF MOMENTS AROUND THE ORIGIN-
MX= Ø.ØØ MY= Ø.ØØ MZ= -27592.75

++ PROCESSING ELEMENT STIFFNESS MATRIX. 9:1Ø: 1
++ PROCESSING GLOBAL STIFFNESS MATRIX. 9:1Ø: 1
++ PROCESSING TRIANGULAR FACTORIZATION. 9:1Ø: 1
++ CALCULATING JOINT DISPLACEMENTS. 9:1Ø: 1
++ CALCULATING MEMBER FORCES. 9:1Ø: 1

***TOTAL REACTION ( POUN FEET ) SUMMARY

LOADING 1

SUM-X= Ø.ØØ SUM-Y= 65875.68 SUM-Z= Ø.ØØ

SUMMATION OF MOMENTS AROUND ORIGIN-

MX= Ø.ØØ MY= Ø.ØØ MZ= 965669.38

EXTERNAL AND INTERNAL JOINT LOAD SUMMARY-

| JT | EXT FX/ INT FX | EXT FY/ INT FY | EXT FZ/ INT FZ | EXT MX/ INT MX | EXT MY/ INT MY | EXT MZ/ INT MZ |
|---|---|---|---|---|---|---|
| 1 | Ø.ØØ | Ø.ØØ | Ø.ØØ | Ø.ØØ | Ø.ØØ | Ø.ØØ |
| | -331.38 | -11496.27 | Ø.ØØ | Ø.ØØ | Ø.ØØ | Ø.ØØ |
| 2 | Ø.ØØ | Ø.ØØ | Ø.ØØ | Ø.ØØ | Ø.ØØ | Ø.ØØ |
| | -636.36 | -34758.68 | Ø.ØØ | Ø.ØØ | Ø.ØØ | Ø.ØØ |
| 4 | Ø.ØØ | Ø.ØØ | Ø.ØØ | Ø.ØØ | Ø.ØØ | Ø.ØØ |
| | 967.74 | -19621Ø.72 | Ø.ØØ | Ø.ØØ | Ø.ØØ | Ø.ØØ |
| 5 | Ø.ØØ | -4166.96 | Ø.ØØ | Ø.ØØ | Ø.ØØ | -7988.76 |
| | Ø.ØØ | 4166.97 | Ø.ØØ | Ø.ØØ | Ø.ØØ | 7988.76 |
| 6 | Ø.ØØ | -3441Ø.29 | Ø.ØØ | Ø.ØØ | Ø.ØØ | -2961Ø.37 |
| | Ø.Ø1 | 3441Ø.28 | Ø.ØØ | Ø.ØØ | Ø.ØØ | 2961Ø.37 |
| 7 | Ø.ØØ | -4104.29 | Ø.ØØ | Ø.ØØ | Ø.ØØ | 2277.88 |
| | -Ø.Ø1 | 4104.29 | Ø.ØØ | Ø.ØØ | Ø.ØØ | -2277.88 |
| 8 | Ø.ØØ | -1449.ØØ | Ø.ØØ | Ø.ØØ | Ø.ØØ | 966.ØØ |
| | Ø.ØØ | 1449.ØØ | Ø.ØØ | Ø.ØØ | Ø.ØØ | -966.ØØ |
| 9 | Ø.ØØ | -4166.96 | Ø.ØØ | Ø.ØØ | Ø.ØØ | -7988.76 |
| | Ø.ØØ | 4166.96 | Ø.ØØ | Ø.ØØ | Ø.ØØ | 7988.76 |

| | | | | | | |
|---|---|---|---|---|---|---|
| 10 | 0.00 | -4889.29 | 0.00 | 0.00 | 0.00 | -7466.76 |
| | 0.02 | 4889.28 | 0.00 | 0.00 | 0.00 | 7466.76 |
| 11 | 0.00 | -4104.29 | 0.00 | 0.00 | 0.00 | 7750.27 |
| | 0.00 | 4104.29 | 0.00 | 0.00 | 0.00 | -7750.27 |
| 12 | 0.00 | -1430.84 | 0.00 | 0.00 | 0.00 | -3259.93 |
| | 0.00 | 1430.84 | 0.00 | 0.00 | 0.00 | 3259.93 |
| 13 | 0.00 | -2616.75 | 0.00 | 0.00 | 0.00 | 1020.53 |
| | 0.00 | 2616.75 | 0.00 | 0.00 | 0.00 | -1020.53 |
| 14 | 0.00 | -1185.91 | 0.00 | 0.00 | 0.00 | 2239.40 |
| | 0.00 | 1185.91 | 0.00 | 0.00 | 0.00 | -2239.39 |
| 15 | 0.00 | -6104.29 | 0.00 | 0.00 | 0.00 | 2277.88 |
| | 0.00 | 6104.29 | 0.00 | 0.00 | 0.00 | -2277.88 |
| 16 | 0.00 | -6104.29 | 0.00 | 0.00 | 0.00 | 2277.88 |
| | 0.00 | 6104.29 | 0.00 | 0.00 | 0.00 | -2277.88 |
| 17 | 0.00 | -1449.00 | 0.00 | 0.00 | 0.00 | 966.00 |
| | 0.00 | 1449.00 | 0.00 | 0.00 | 0.00 | -966.00 |
| 18 | 0.00 | -1449.00 | 0.00 | 0.00 | 0.00 | 966.00 |
| | 0.00 | 1449.00 | 0.00 | 0.00 | 0.00 | -966.00 |
| 19 | 0.00 | -2655.29 | 0.00 | 0.00 | 0.00 | -3243.88 |
| | 0.00 | 2655.30 | 0.00 | 0.00 | 0.00 | 3243.88 |
| 20 | 0.00 | -2655.29 | 0.00 | 0.00 | 0.00 | -3243.88 |
| | 0.00 | 2655.30 | 0.00 | 0.00 | 0.00 | 3243.88 |
| 21 | 0.00 | -6951.96 | 0.00 | 0.00 | 0.00 | 7705.25 |
| | -0.01 | 6951.96 | 0.00 | 0.00 | 0.00 | -7705.25 |
| 22 | 0.00 | -6951.96 | 0.00 | 0.00 | 0.00 | 7705.25 |
| | -0.01 | 6951.96 | 0.00 | 0.00 | 0.00 | -7705.25 |

LOADING 2

SUM-X= -1784.90 SUM-Y= 0.00 SUM-Z= 0.00

SUMMATION OF MOMENTS AROUND ORIGIN-

MX= 0.00 MY= 0.00 MZ= 27592.76

EXTERNAL AND INTERNAL JOINT LOAD SUMMARY-

| JT | EXT FX/ INT FX | EXT FY/ INT FY | EXT FZ/ INT FZ | EXT MX/ INT MX | EXT MY/ INT MY | EXT MZ/ INT MZ |
|---|---|---|---|---|---|---|
| 1 | 180.00 | 0.00 | 0.00 | 0.00 | 0.00 | -300.00 |
| | 131.21 | 487.91 | 0.00 | 0.00 | 0.00 | 300.00 |
| 2 | 0.00 | 0.00 | 0.00 | 0.00 | 0.00 | 0.00 |
| | 703.45 | 1358.78 | 0.00 | 0.00 | 0.00 | 0.00 |
| 4 | 50.40 | 0.00 | 0.00 | 0.00 | 0.00 | -42.00 |
| | 719.84 | -1846.69 | 0.00 | 0.00 | 0.00 | 42.00 |
| 5 | 365.40 | 0.00 | 0.00 | 0.00 | 0.00 | -15.00 |
| | -365.40 | 0.00 | 0.00 | 0.00 | 0.00 | 15.00 |
| 6 | 0.00 | 0.00 | 0.00 | 0.00 | 0.00 | 0.00 |
| | -0.03 | 0.00 | 0.00 | 0.00 | 0.00 | 0.00 |
| 7 | 0.00 | 0.00 | 0.00 | 0.00 | 0.00 | 0.00 |
| | 0.00 | 0.00 | 0.00 | 0.00 | 0.00 | 0.00 |
| 8 | 100.80 | 0.00 | 0.00 | 0.00 | 0.00 | 0.00 |
| | -100.78 | 0.00 | 0.00 | 0.00 | 0.00 | 0.00 |

| | | | | | | |
|---|---|---|---|---|---|---|
| 9 | 414.77 | Ø.ØØ | Ø.ØØ | Ø.ØØ | Ø.ØØ | -22.14 |
| | -414.77 | Ø.ØØ | Ø.ØØ | Ø.ØØ | Ø.ØØ | 22.14 |
| 1Ø | Ø.ØØ | Ø.ØØ | Ø.ØØ | Ø.ØØ | Ø.ØØ | Ø.ØØ |
| | -Ø.16 | Ø.ØØ | Ø.ØØ | Ø.ØØ | Ø.ØØ | Ø.ØØ |
| 11 | 151.2Ø | Ø.ØØ | Ø.ØØ | Ø.ØØ | Ø.ØØ | -126.ØØ |
| | -151.21 | Ø.ØØ | Ø.ØØ | Ø.ØØ | Ø.ØØ | 126.ØØ |
| 12 | 219.93 | Ø.ØØ | Ø.ØØ | Ø.ØØ | Ø.ØØ | 363.7Ø |
| | -219.92 | Ø.ØØ | Ø.ØØ | Ø.ØØ | Ø.ØØ | -363.7Ø |
| 13 | Ø.ØØ | Ø.ØØ | Ø.ØØ | Ø.ØØ | Ø.ØØ | Ø.ØØ |
| | Ø.Ø4 | Ø.ØØ | Ø.ØØ | Ø.ØØ | Ø.ØØ | Ø.ØØ |
| 14 | 1ØØ.8Ø | Ø.ØØ | Ø.ØØ | Ø.ØØ | Ø.ØØ | 168.ØØ |
| | -1ØØ.86 | Ø.ØØ | Ø.ØØ | Ø.ØØ | Ø.ØØ | -168.ØØ |
| 15 | Ø.ØØ | Ø.ØØ | Ø.ØØ | Ø.ØØ | Ø.ØØ | Ø.ØØ |
| | -Ø.Ø1 | Ø.ØØ | Ø.ØØ | Ø.ØØ | Ø.ØØ | Ø.ØØ |
| 16 | Ø.ØØ | Ø.ØØ | Ø.ØØ | Ø.ØØ | Ø.ØØ | Ø.ØØ |
| | -Ø.Ø4 | Ø.ØØ | Ø.ØØ | Ø.ØØ | Ø.ØØ | Ø.ØØ |
| 17 | 1ØØ.8Ø | Ø.ØØ | Ø.ØØ | Ø.ØØ | Ø.ØØ | Ø.ØØ |
| | -1ØØ.79 | Ø.ØØ | Ø.ØØ | Ø.ØØ | Ø.ØØ | Ø.ØØ |
| 18 | 1ØØ.8Ø | Ø.ØØ | Ø.ØØ | Ø.ØØ | Ø.ØØ | Ø.ØØ |
| | -1ØØ.75 | Ø.ØØ | Ø.ØØ | Ø.ØØ | Ø.ØØ | Ø.ØØ |
| 19 | Ø.ØØ | Ø.ØØ | Ø.ØØ | Ø.ØØ | Ø.ØØ | Ø.ØØ |
| | -Ø.Ø2 | Ø.ØØ | Ø.ØØ | Ø.ØØ | Ø.ØØ | Ø.ØØ |
| 2Ø | Ø.ØØ | Ø.ØØ | Ø.ØØ | Ø.ØØ | Ø.ØØ | Ø.ØØ |
| | Ø.ØØ | Ø.ØØ | Ø.ØØ | Ø.ØØ | Ø.ØØ | Ø.ØØ |
| 21 | Ø.ØØ | Ø.ØØ | Ø.ØØ | Ø.ØØ | Ø.ØØ | Ø.ØØ |
| | Ø.18 | Ø.ØØ | Ø.ØØ | Ø.ØØ | Ø.ØØ | Ø.ØØ |
| 22 | Ø.ØØ | Ø.ØØ | Ø.ØØ | Ø.ØØ | Ø.ØØ | Ø.ØØ |
| | Ø.Ø1 | Ø.ØØ | Ø.ØØ | Ø.ØØ | Ø.ØØ | Ø.ØØ |

********** END OF DATA FROM INTERNAL STORAGE **********

54. PARAMETER
55. CODE AISC
56. CHECK CODE ALL

STAAD-III CODE CHECKING - (AISC)
**********

ALL UNITS ARE - POUN FEET (UNLESS OTHERWISE NOTED)

| MEMBER | TABLE | RESULT/ FX | CRITICAL COND/ MY | RATIO/ MZ | LOADING/ LOCATION |
|---|---|---|---|---|---|
| 1 | ST W8X 10 | PASS | AISC- H1-1 | 0.912 | 1 |
| | | 11496.27 C | 0.00 | -3313.84 | 10.00 |
| 2 | ST W8X 10 | PASS | AISC- H1-1 | 0.925 | 1 |
| | | 34758.68 C | 0.00 | -3181.79 | 5.00 |
| 4 | ST W8X 10 | PASS | AISC- H1-1 | 0.981 | 3 |
| | | 21467.42 C | 0.00 | 8437.91 | 5.00 |
| 5 | ST W8X 15 | PASS | AISC- H2-1 | 0.706 | 1 |
| | | 871.82 T | 0.00 | 9441.75 | 0.00 |
| 6 | ST W8X 15 | PASS | AISC- H2-1 | 0.531 | 1 |
| | | 359.74 T | 0.00 | 11154.16 | 0.00 |
| 7 | ST W8X 15 | PASS | AISC- H2-1 | 0.334 | 3 |
| | | 254.79 T | 0.00 | -7765.34 | 4.00 |
| 8 | ST W8X 10 | PASS | AISC- H1-1 | 0.997 | 1 |
| | | 6485.63 C | 0.00 | -6127.90 | 0.00 |
| 9 | ST W8X 10 | PASS | AISC- H1-1 | 0.605 | 1 |
| | | 18514.36 C | 0.00 | -3491.15 | 5.00 |
| 11 | ST W8X 10 | PASS | AISC- H1-2 | 0.607 | 3 |
| | | 11170.11 C | 0.00 | 5888.88 | 5.00 |
| 12 | ST W8X 15 | PASS | AISC- H1-3 | 0.765 | 1 |
| | | 504.00 C | 0.00 | 9981.24 | 0.00 |
| 13 | ST W8X 10 | PASS | AISC- H1-3 | 0.603 | 1 |
| | | 1437.84 C | 0.00 | -4077.11 | 0.00 |
| 14 | ST W8X 10 | PASS | AISC- H1-3 | 0.463 | 3 |
| | | 2586.41 C | 0.00 | 2614.43 | 0.00 |
| 15 | ST W8X 10 | PASS | AISC- H1-3 | 0.382 | 3 |
| | | 1260.53 C | 0.00 | 2460.58 | 0.00 |
| 16 | ST W8X 15 | PASS | AISC- H1-3 | 0.327 | 3 |
| | | 810.79 C | 0.00 | -3195.58 | 13.67 |
| 22 | ST W8X 15 | PASS | AISC- H2-1 | 0.578 | 3 |
| | | 207.57 T | 0.00 | -13497.45 | 4.00 |
| 23 | ST W8X 10 | PASS | AISC- H1-1 | 0.634 | 3 |
| | | 15165.31 C | 0.00 | 5059.54 | 0.00 |
| 24 | ST W8X 15 | PASS | AISC- H2-1 | 0.506 | 3 |
| | | 247.26 T | 0.00 | -11790.79 | 4.00 |
| 25 | ST W8X 10 | PASS | AISC- H1-3 | 0.541 | 3 |
| | | 5183.31 C | 0.00 | 5901.92 | 0.00 |
| 26 | ST W8X 15 | PASS | AISC- H1-3 | 0.181 | 3 |
| | | 373.18 C | 0.00 | -2279.70 | 11.33 |
| 27 | ST W8X 15 | PASS | AISC- H1-3 | 0.797 | 1 |
| | | 1365.86 C | 0.00 | 10140.58 | 0.00 |
| 28 | ST W8X 15 | PASS | AISC- H2-1 | 0.340 | 1 |
| | | 169.69 T | 0.00 | -7129.36 | 7.33 |

ALL UNITS ARE - POUN FEET (UNLESS OTHERWISE NOTED)

| MEMBER | TABLE | RESULT/ FX | CRITICAL COND/ MY | RATIO/ MZ | LOADING/ LOCATION |
|---|---|---|---|---|---|
| 29 | ST W8X 10 | PASS | AISC- H1-1 | 0.519 | 1 |
| | | 13947.31 C | 0.00 | -3638.20 | 0.00 |
| 30 | ST W8X 15 | PASS | AISC- H2-1 | 0.379 | 1 |
| | | 263.18 T | 0.00 | -7945.13 | 7.33 |
| 31 | ST W8X 10 | PASS | AISC- H1-1 | 0.927 | 1 |
| | | 30030.69 C | 0.00 | -4763.34 | 0.00 |
| 37 | ST W8X 15 | PASS | AISC- H1-3 | 0.607 | 3 |
| | | 916.32 C | 0.00 | -13980.63 | 2.17 |
| 38 | ST W8X 15 | PASS | AISC- H2-1 | 0.638 | 3 |
| | | 527.00 T | 0.00 | -14816.32 | 2.17 |

********** END OF TABULATED RESULT OF DESIGN **********

57. STEEL TAKE OFF

STEEL TAKE-OFF
---

| PROFILE | LENGTH(FEET) | WEIGHT(POUN) |
|---|---|---|
| ST W8X 10 | 90.00 | 904.694 |
| ST W8X 15 | 97.66 | 1472.541 |
| | TOTAL = | 2377.24 |

********** END OF DATA FROM INTERNAL STORAGE **********

58. FINISH

********** END OF STAAD-III **********

**** DATE= NOV 23,1994 TIME= 9:10: 3 ****

```
**********************************************************
*       For questions on STAAD-III/ISDS, contact:        *
*              RESEARCH ENGINEERS, Inc at                *
*       Ph: (714) 974-2500   Fax:  (714) 974-4771        *
**********************************************************
```

NM/ELEM

1

STRUCTURE DATA

TYPE = SPACE

NJ = 15

NM = 18

NE = 0

NS = 5

NL = 1

XMAX= 12.0

YMAX= 30.0

ZMAX= 0.0

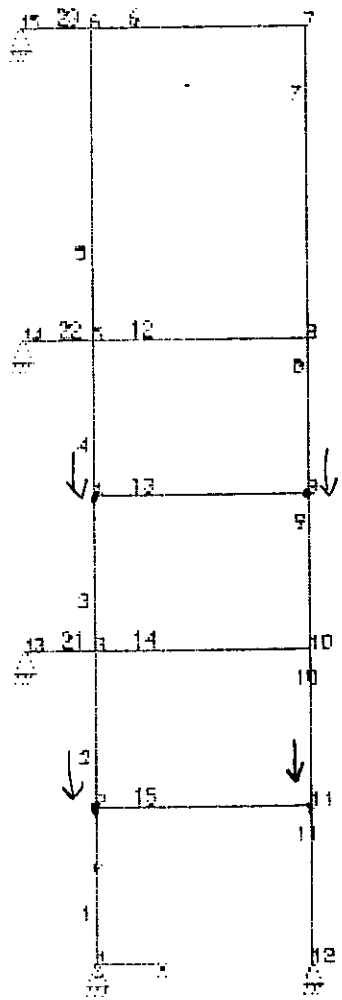


J=15,N=18

UNIT FEE POU

COMPANY: U.S. Army Corps of Engineers

S T A A D P L - P L O T (REV: 19.0 )

TITLE: STAIRSIDE

DATE: NOV 21, 1994

STRUCTURE DATA

TYPE = SPACE

NJ = 15

NM = 18

NE = 0

NS = 5

NL = 1

XMAX= 12.0

YMAX= 30.0

ZMAX= 0.0

1

NM/ELEM

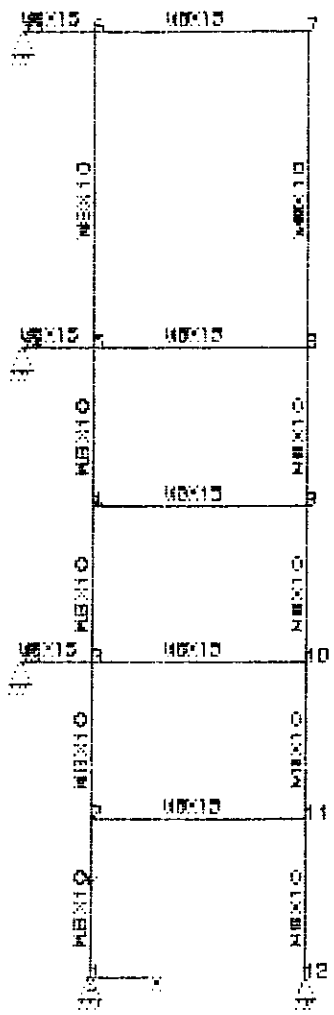


J=15,M=18

UNIT FEE POU

COMPANY: U.S. Army Corps of Engineers

S T A A D P L - P L O T (REV: 19.0 )

TITLE: STAIRSIDE

DATE: NOV 21, 1994

Fig. 44

SUBJECT

COMPUTATION

COMPUTED BY CHECKED BY DATE

(1) MEMBER LOADS FOR MEMBER (6) (12) (13) (14) (15)

$= 4\,ft\ (100 + 23 + 38)\ psf$

$= 4 \times 161$

$= 644\ lb/ft$

(2) JOINT LOADS (2) (4) (9) (11) – STAIRS

$= F_y = -2000\ lbs$

```
*****************************************************
*                                                   *
*            S T A A D - III                        *
*            Revision 19.Ø                          *
*            Proprietary Program of                 *
*            RESEARCH ENGINEERS, Inc.               *
*            Date=     NOV 25, 1994                 *
*            Time=     15:48:39                     *
*                                                   *
*       USER ID: U.S. Army Corps of Engineers       *
*****************************************************
```

```
 1. STAAD SPACE STAIRSIDE
 2. INPUT WIDTH 72
 3. UNIT FEET POUND
 4. JOINT COORDINATES
 5. 1 Ø. Ø. Ø.; 2 Ø. 5. Ø.; 3 Ø. 1Ø. Ø.; 4 Ø. 15. Ø.; 5 Ø. 2Ø. Ø.
 6. 6 Ø. 3Ø. Ø.; 7 9. 3Ø. Ø.; 8 9. 2Ø. Ø.; 9 9. 15. Ø.; 1Ø 9. 1Ø. Ø.
 7. 11 9. 5. Ø.; 12 9. Ø. Ø.; 13 -3. 1Ø. Ø.; 14 -3. 2Ø. Ø.; 15 -3. 3Ø. Ø.
 8. MEMBER INCIDENCES
 9. 1 1 2; 2 2 3; 3 3 4; 4 4 5; 5 5 6; 6 6 7; 7 7 8; 8 8 9; 9 9 1Ø; 1Ø 1Ø 1
1Ø. 11 11 12; 12 5 8; 13 4 9; 14 3 1Ø; 15 2 11; 21 3 13; 22 5 14; 23 6 15
11. MEMBER PROPERTY AMERICAN
12. 1 TO 5 7 TO 11 TABLE ST W8X1Ø
13. 6 12 TO 15 TABLE ST W8X15
14. 21 TO 23 TABLE ST W8X15
15. CONSTANTS
16. E STEEL ALL
17. SUPPORTS
18. 1 12 PINNED
19. LOAD 1 DEAD
2Ø. MEMBER LOAD
21. 6 12 TO 15 UNI Y -644.
22. 21 TO 23 UNI Y -644.
23. JOINT LOAD
24. 2 4 9 11 FY -2ØØØ.
25. PERFORM ANALYSIS PRINT LOAD DATA
```

P R O B L E M  S T A T I S T I C S

```
NUMBER OF JOINTS/MEMBER+ELEMENTS/SUPPORTS =    15/    18/     2
ORIGINAL/FINAL BAND-WIDTH =    1Ø/     4
TOTAL PRIMARY LOAD CASES  =     1, TOTAL DEGREES OF FREEDOM =     84
SIZE OF STIFFNESS MATRIX =    252Ø DOUBLE PREC. WORDS
REQUIRED DISK SPACE =   12.Ø7 MB, TOTAL EXMEM =  2.24 MB
```

LOADING 1 DEAD

MEMBER LOAD - UNIT POUN FEET

| MEMBER | UDL | L1 | L2 | CON | L | LIN1 | LIN2 |
|---|---|---|---|---|---|---|---|
| 6 | -644.000 Y | 0.00 | 9.00 | | | | |
| 12 | -644.000 Y | 0.00 | 9.00 | | | | |
| 13 | -644.000 Y | 0.00 | 9.00 | | | | |
| 14 | -644.000 Y | 0.00 | 9.00 | | | | |
| 15 | -644.000 Y | 0.00 | 9.00 | | | | |
| 21 | -644.000 Y | 0.00 | 3.00 | | | | |
| 22 | -644.000 Y | 0.00 | 3.00 | | | | |
| 23 | -644.000 Y | 0.00 | 3.00 | | | | |

JOINT LOAD - UNIT POUN FEET

| JOINT | FORCE-X | FORCE-Y | FORCE-Z | MOM-X | MOM-Y | MOM-Z |
|---|---|---|---|---|---|---|
| 2 | 0.00 | -2000.00 | 0.00 | 0.00 | 0.00 | 0.00 |
| 4 | 0.00 | -2000.00 | 0.00 | 0.00 | 0.00 | 0.00 |
| 9 | 0.00 | -2000.00 | 0.00 | 0.00 | 0.00 | 0.00 |
| 11 | 0.00 | -2000.00 | 0.00 | 0.00 | 0.00 | 0.00 |

```
++ PROCESSING ELEMENT STIFFNESS MATRIX.                    15:48:40
++ PROCESSING GLOBAL STIFFNESS MATRIX.                     15:48:41
++ PROCESSING TRIANGULAR FACTORIZATION.                    15:48:41

 ***WARNING - IMPROPER LOAD WILL CAUSE INSTABILITY AT JOINT     1
   DIRECTION = MX  PROBABLE CAUSE MODELING PROBLEM      0.937E-10
++ CALCULATING JOINT DISPLACEMENTS.                        15:48:41
++ CALCULATING MEMBER  FORCES.                             15:48:41
```

********** END OF DATA FROM INTERNAL STORAGE **********

26. PERFORM ANALYSIS PRINT STATICS CHECK

```
***TOTAL APPLIED LOAD ( POUN FEET ) SUMMARY (LOADING     1 )
    SUMMATION FORCE-X =          Ø.ØØ
    SUMMATION FORCE-Y =    -42776.ØØ
    SUMMATION FORCE-Z =          Ø.ØØ

   SUMMATION OF MOMENTS AROUND THE ORIGIN-
   MX=            Ø.ØØ  MY=            Ø.ØØ  MZ=      -157716.Ø2

++ PROCESSING ELEMENT STIFFNESS MATRIX.                15:48:42
++ PROCESSING GLOBAL STIFFNESS MATRIX.                 15:48:42
++ PROCESSING TRIANGULAR FACTORIZATION.                15:48:42

 ***WARNING - IMPROPER LOAD WILL CAUSE INSTABILITY AT JOINT     1
   DIRECTION = MX  PROBABLE CAUSE MODELING PROBLEM     Ø.937E-1Ø
++ CALCULATING JOINT DISPLACEMENTS.                    15:48:42
++ CALCULATING MEMBER  FORCES.                         15:48:42


 ***TOTAL REACTION ( POUN FEET ) SUMMARY

 LOADING     1

 SUM-X=         Ø.ØØ  SUM-Y=     42776.ØØ  SUM-Z=         Ø.ØØ

 SUMMATION OF MOMENTS AROUND ORIGIN-

 MX=            Ø.ØØ  MY=            Ø.ØØ  MZ=       157716.Ø3


 ************ END OF DATA FROM INTERNAL STORAGE ************

  27. PERFORM ANALYSIS PRINT STATICS LOAD
```

```
***TOTAL APPLIED LOAD ( POUN FEET ) SUMMARY (LOADING     1 )
    SUMMATION FORCE-X =          0.00
    SUMMATION FORCE-Y =    -42776.00
    SUMMATION FORCE-Z =          0.00

   SUMMATION OF MOMENTS AROUND THE ORIGIN-
   MX=            0.00  MY=            0.00  MZ=      -157716.02

++ PROCESSING ELEMENT STIFFNESS MATRIX.                  15:48:43
++ PROCESSING GLOBAL STIFFNESS MATRIX.                   15:48:43
++ PROCESSING TRIANGULAR FACTORIZATION.                  15:48:43

 ***WARNING - IMPROPER LOAD WILL CAUSE INSTABILITY AT JOINT     1
   DIRECTION = MX  PROBABLE CAUSE MODELING PROBLEM     0.937E-10
++ CALCULATING JOINT DISPLACEMENTS.                      15:48:43
++ CALCULATING MEMBER  FORCES.                           15:48:43
```

***TOTAL REACTION ( POUN FEET ) SUMMARY

LOADING 1

SUM-X= 0.00 SUM-Y= 42776.00 SUM-Z= 0.00

SUMMATION OF MOMENTS AROUND ORIGIN-

MX= 0.00 MY= 0.00 MZ= 157716.03

EXTERNAL AND INTERNAL JOINT LOAD SUMMARY-

| JT | EXT FX/ INT FX | EXT FY/ INT FY | EXT FZ/ INT FZ | EXT MX/ INT MX | EXT MY/ INT MY | EXT MZ/ INT MZ |
|---|---|---|---|---|---|---|
| 1 | 0.00 | 0.00 | 0.00 | 0.00 | 0.00 | 0.00 |
| | -290.07 | -25252.00 | 0.00 | 0.00 | 0.00 | 0.00 |
| 2 | 0.00 | -4898.00 | 0.00 | 0.00 | 0.00 | -4347.00 |
| | 0.00 | 4898.01 | 0.00 | 0.00 | 0.00 | 4347.00 |
| 3 | 0.00 | -3864.00 | 0.00 | 0.00 | 0.00 | -3864.00 |
| | 0.00 | 3863.99 | 0.00 | 0.00 | 0.00 | 3864.00 |
| 4 | 0.00 | -4898.00 | 0.00 | 0.00 | 0.00 | -4347.00 |
| | 0.00 | 4898.00 | 0.00 | 0.00 | 0.00 | 4347.00 |
| 5 | 0.00 | -3864.00 | 0.00 | 0.00 | 0.00 | -3864.00 |
| | -0.01 | 3864.01 | 0.00 | 0.00 | 0.00 | 3864.00 |
| 6 | 0.00 | -3864.00 | 0.00 | 0.00 | 0.00 | -3864.00 |
| | 0.02 | 3864.00 | 0.00 | 0.00 | 0.00 | 3864.00 |
| 7 | 0.00 | -2898.00 | 0.00 | 0.00 | 0.00 | 4347.00 |
| | 0.00 | 2898.00 | 0.00 | 0.00 | 0.00 | -4347.00 |
| 8 | 0.00 | -2898.00 | 0.00 | 0.00 | 0.00 | 4347.00 |
| | 0.00 | 2898.00 | 0.00 | 0.00 | 0.00 | -4347.00 |
| 9 | 0.00 | -4898.00 | 0.00 | 0.00 | 0.00 | 4347.00 |
| | 0.00 | 4898.00 | 0.00 | 0.00 | 0.00 | -4347.00 |
| 10 | 0.00 | -2898.00 | 0.00 | 0.00 | 0.00 | 4347.00 |
| | 0.00 | 2898.00 | 0.00 | 0.00 | 0.00 | -4347.00 |
| 11 | 0.00 | -4898.00 | 0.00 | 0.00 | 0.00 | 4347.00 |
| | 0.00 | 4898.00 | 0.00 | 0.00 | 0.00 | -4347.00 |

| | | | | | | |
|---|---|---|---|---|---|---|
| 12 | 0.00 | 0.00 | 0.00 | 0.00 | 0.00 | 0.00 |
| | 290.07 | -17524.00 | 0.00 | 0.00 | 0.00 | 0.00 |
| 13 | 0.00 | -966.00 | 0.00 | 0.00 | 0.00 | -483.00 |
| | 0.00 | 966.00 | 0.00 | 0.00 | 0.00 | 483.00 |
| 14 | 0.00 | -966.00 | 0.00 | 0.00 | 0.00 | -483.00 |
| | 0.01 | 966.00 | 0.00 | 0.00 | 0.00 | 483.00 |
| 15 | 0.00 | -966.00 | 0.00 | 0.00 | 0.00 | -483.00 |
| | -0.02 | 966.00 | 0.00 | 0.00 | 0.00 | 483.00 |

********** END OF DATA FROM INTERNAL STORAGE **********

28. PARAMETER
29. CODE AISC
30. CHECK CODE ALL

STAAD-III CODE CHECKING - (AISC)
**********

ALL UNITS ARE - POUN FEET (UNLESS OTHERWISE NOTED)

| MEMBER | TABLE | RESULT/ FX | CRITICAL COND/ MY | RATIO/ MZ | LOADING/ LOCATION |
|---|---|---|---|---|---|
| 1 | ST W8X 10 | PASS<br>25252.00 C | AISC- H1-1<br>0.00 | 0.616<br>-1450.35 | 1<br>5.00 |
| 2 | ST W8X 10 | PASS<br>20301.56 C | AISC- H1-1<br>0.00 | 0.565<br>-2269.27 | 1<br>0.00 |
| 3 | ST W8X 10 | PASS<br>15226.94 C | AISC- H1-1<br>0.00 | 0.435<br>-1892.03 | 1<br>5.00 |
| 4 | ST W8X 10 | PASS<br>10253.68 C | AISC- H1-1<br>0.00 | 0.342<br>-2064.62 | 1<br>0.00 |
| 5 | ST W8X 10 | PASS<br>5143.97 C | AISC- H1-1<br>0.00 | 0.417<br>-1592.17 | 1<br>10.00 |
| 6 | ST W8X 15 | PASS<br>273.61 C | AISC- H1-3<br>0.00 | 0.269<br>4490.17 | 1<br>0.00 |
| 7 | ST W8X 10 | PASS<br>2584.03 C | AISC- H1-3<br>0.00 | 0.338<br>1664.43 | 1<br>0.00 |
| 8 | ST W8X 10 | PASS<br>5202.32 C | AISC- H1-3<br>0.00 | 0.229<br>1648.16 | 1<br>0.00 |
| 9 | ST W8X 10 | PASS<br>10025.06 C | AISC- H1-1<br>0.00 | 0.313<br>1667.56 | 1<br>0.00 |
| 10 | ST W8X 10 | PASS<br>12678.44 C | AISC- H1-1<br>0.00 | 0.376<br>1797.34 | 1<br>5.00 |
| 11 | ST W8X 10 | PASS<br>17524.00 C | AISC- H1-1<br>0.00 | 0.455<br>1450.35 | 1<br>0.00 |
| 12 | ST W8X 15 | PASS<br>378.36 C | AISC- H1-3<br>0.00 | 0.315<br>5237.21 | 1<br>0.00 |
| 13 | ST W8X 15 | PASS<br>43.97 T | AISC- H2-1<br>0.00 | 0.231<br>3956.65 | 1<br>0.00 |
| 14 | ST W8X 15 | PASS<br>70.38 C | AISC- H1-3<br>0.00 | 0.304<br>5168.62 | 1<br>0.00 |
| 15 | ST W8X 15 | PASS<br>388.31 T | AISC- H2-1<br>0.00 | 0.218<br>3719.61 | 1<br>0.00 |
| 21 | ST W8X 15 | PASS<br>0.00 | AISC- H1-3<br>0.00 | 0.124<br>2898.00 | 1<br>0.00 |
| 22 | ST W8X 15 | PASS<br>0.01 | AISC- H1-3<br>0.00 | 0.124<br>2898.00 | 1<br>0.00 |
| 23 | ST W8X 15 | PASS<br>0.02 | AISC- H1-3<br>0.00 | 0.124<br>2898.00 | 1<br>0.00 |

********** END OF TABULATED RESULT OF DESIGN **********

31. STEEL TAKE OFF

STEEL TAKE-OFF

| PROFILE | LENGTH(FEET) | WEIGHT(POUN) |
|---|---|---|
| ST W8X 10 | 60.00 | 603.130 |
| ST W8X 15 | 54.00 | 814.225 |
| | TOTAL = | 1417.35 |

********** END OF DATA FROM INTERNAL STORAGE **********

32. FINISH

********** END OF STAAD-III **********

**** DATE= NOV 25,1994 TIME= 15:48:44 ****

```
**********************************************************
*       For questions on STAAD-III/ISDS, contact:        *
*              RESEARCH ENGINEERS, Inc at                *
*       Ph: (714) 974-2500   Fax:  (714) 974-4771        *
**********************************************************
```

NN/ELEM

1

STRUCTURE DATA

TYPE = SPACE

NJ = 11

NM = 12

NE = 0

NS = 2

NL = 1

XMAX= 12.0

YMAX= 33.0

ZMAX= 0.0

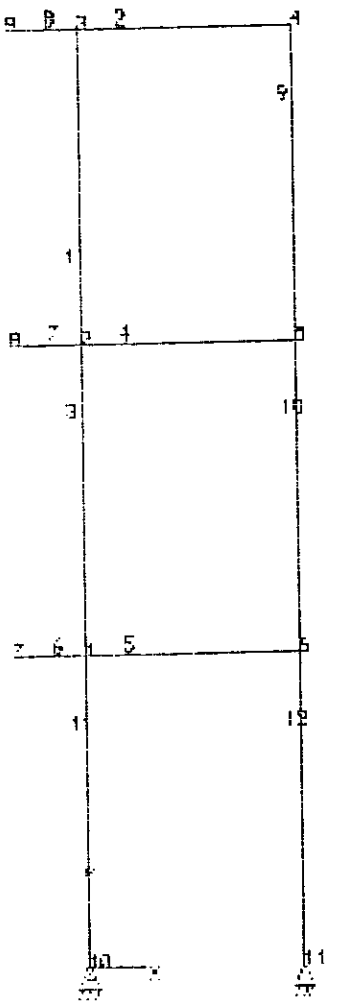


J=11 ,N=12

UNIT FEE POU

COMPANY: U.S. Army Corps of Engineers

S T A A D P L - P L O T (REV: 19.0 )

TITLE: STAIRSIDE

DATE: NOV 23, 1994

SUBJECT

COMPUTATION

COMPUTED BY CHECKED BY DATE

LOADS FOR MEM 2 4 & 5
6 7 & 9

$= 2\ ft \times (100 + 23 + 38)\ psf$

$= 322\ lb/ft$

```
*****************************************************
*                                                   *
*            S T A A D - III                        *
*            Revision 19.Ø                          *
*            Proprietary Program of                 *
*            RESEARCH ENGINEERS, Inc.               *
*            Date=     NOV 23, 1994                 *
*            Time=     12:53:43                     *
*                                                   *
*       USER ID: U.S. Army Corps of Engineers       *
*****************************************************
```

```
 1. STAAD SPACE STAIRSIDE
 2. INPUT WIDTH 72
 3. UNIT FEET POUND
 4. JOINT COORDINATES
 5. 1 Ø. 1Ø. Ø.; 2 Ø. 2Ø. Ø.; 3 Ø. 3Ø. Ø.; 4 9. 3Ø. Ø.; 5 9. 2Ø. Ø.
 6. 6 9. 1Ø. Ø.; 7 -3. 1Ø. Ø.; 8 -3. 2Ø. Ø.; 9 -3. 3Ø. Ø.; 1Ø Ø. Ø. Ø.
 7. 11 9. Ø. Ø.
 8. MEMBER INCIDENCES
 9. 1 2 3; 2 3 4; 9 4 5; 4 2 5; 5 1 6; 6 1 7; 7 2 8; 8 3 9; 3 2 1; 1Ø 5 6
1Ø. 11 1 1Ø; 12 6 11
11. MEMBER PROPERTY AMERICAN
12. 1 9 3 1Ø TO 12 TABLE ST W8X1Ø
13. 2 4 5 TABLE ST W8X15
14. 6 TO 8 TABLE ST W8X15
15. CONSTANTS
16. E STEEL ALL
17. SUPPORTS
18. 1Ø 11 PINNED
19. LOAD 1 DEAD
2Ø. MEMBER LOAD
21. 2 4 TO 8 UNI Y -322.
22. PERFORM ANALYSIS PRINT LOAD DATA
```

P R O B L E M  S T A T I S T I C S

```
NUMBER OF JOINTS/MEMBER+ELEMENTS/SUPPORTS =    11/    12/     2
ORIGINAL/FINAL BAND-WIDTH =     9/     4
TOTAL PRIMARY LOAD CASES  =     1, TOTAL DEGREES OF FREEDOM =    6Ø
SIZE OF STIFFNESS MATRIX =    18ØØ DOUBLE PREC. WORDS
REQUIRED DISK SPACE =   12.Ø5 MB, TOTAL EXMEM =  2.24 MB
```

LOADING 1 DEAD

MEMBER LOAD - UNIT POUN FEET

| MEMBER | UDL | | L1 | L2 | CON | L | LIN1 | LIN2 |
|---|---|---|---|---|---|---|---|---|
| 2 | -322.000 | Y | 0.00 | 9.00 | | | | |
| 4 | -322.000 | Y | 0.00 | 9.00 | | | | |
| 5 | -322.000 | Y | 0.00 | 9.00 | | | | |
| 6 | -322.000 | Y | 0.00 | 3.00 | | | | |
| 7 | -322.000 | Y | 0.00 | 3.00 | | | | |
| 8 | -322.000 | Y | 0.00 | 3.00 | | | | |

```
++ PROCESSING ELEMENT STIFFNESS MATRIX.                    12:53:45
++ PROCESSING GLOBAL STIFFNESS MATRIX.                     12:53:45
++ PROCESSING TRIANGULAR FACTORIZATION.                    12:53:45

 ***WARNING - IMPROPER LOAD WILL CAUSE INSTABILITY AT JOINT   10
   DIRECTION = MX  PROBABLE CAUSE MODELING PROBLEM     0.290E-09
++ CALCULATING JOINT DISPLACEMENTS.                        12:53:45
++ CALCULATING MEMBER  FORCES.                             12:53:45


 ************* END OF DATA FROM INTERNAL STORAGE *************

  23. PERFORM ANALYSIS PRINT STATICS CHECK
```

```
***TOTAL APPLIED LOAD ( POUN FEET ) SUMMARY (LOADING     1 )
     SUMMATION FORCE-X =          Ø.ØØ
     SUMMATION FORCE-Y =    -11592.ØØ
     SUMMATION FORCE-Z =          Ø.ØØ

    SUMMATION OF MOMENTS AROUND THE ORIGIN-
    MX=            Ø.ØØ   MY=            Ø.ØØ   MZ=        -34776.ØØ

++ PROCESSING ELEMENT STIFFNESS MATRIX.                    12:53:46
++ PROCESSING GLOBAL STIFFNESS MATRIX.                     12:53:46
++ PROCESSING TRIANGULAR FACTORIZATION.                    12:53:46

 ***WARNING - IMPROPER LOAD WILL CAUSE INSTABILITY AT JOINT    1Ø
   DIRECTION = MX  PROBABLE CAUSE MODELING PROBLEM      Ø.29ØE-Ø9
++ CALCULATING JOINT DISPLACEMENTS.                        12:53:46
++ CALCULATING MEMBER  FORCES.                             12:53:46


 ***TOTAL REACTION ( POUN FEET ) SUMMARY


 LOADING     1

 SUM-X=         Ø.ØØ   SUM-Y=     11592.ØØ   SUM-Z=          Ø.ØØ

 SUMMATION OF MOMENTS AROUND ORIGIN-

 MX=            Ø.ØØ   MY=            Ø.ØØ   MZ=         34776.ØØ

 ************ END OF DATA FROM INTERNAL STORAGE ************

  24. PERFORM ANALYSIS PRINT STATICS LOAD
```

```
***TOTAL APPLIED LOAD ( POUN FEET ) SUMMARY (LOADING     1 )
    SUMMATION FORCE-X =          Ø.ØØ
    SUMMATION FORCE-Y =    -11592.ØØ
    SUMMATION FORCE-Z =          Ø.ØØ

   SUMMATION OF MOMENTS AROUND THE ORIGIN-
   MX=            Ø.ØØ  MY=            Ø.ØØ  MZ=       -34776.ØØ

++ PROCESSING ELEMENT STIFFNESS MATRIX.                  12:53:47
++ PROCESSING GLOBAL STIFFNESS MATRIX.                   12:53:47
++ PROCESSING TRIANGULAR FACTORIZATION.                  12:53:47

 ***WARNING - IMPROPER LOAD WILL CAUSE INSTABILITY AT JOINT   1Ø
   DIRECTION = MX  PROBABLE CAUSE MODELING PROBLEM     Ø.29ØE-Ø9
++ CALCULATING JOINT DISPLACEMENTS.                      12:53:47
++ CALCULATING MEMBER  FORCES.                           12:53:47


 ***TOTAL REACTION ( POUN FEET ) SUMMARY


 LOADING     1

 SUM-X=         Ø.ØØ  SUM-Y=     11592.ØØ  SUM-Z=         Ø.ØØ

 SUMMATION OF MOMENTS AROUND ORIGIN-

 MX=            Ø.ØØ  MY=            Ø.ØØ  MZ=        34776.ØØ


 EXTERNAL AND INTERNAL JOINT LOAD SUMMARY-
```

| JT | EXT FX/ INT FX | EXT FY/ INT FY | EXT FZ/ INT FZ | EXT MX/ INT MX | EXT MY/ INT MY | EXT MZ/ INT MZ |
|---|---|---|---|---|---|---|
| 1 | Ø.ØØ | -1932.ØØ | Ø.ØØ | Ø.ØØ | Ø.ØØ | -1932.ØØ |
| | -Ø.Ø1 | 1932.ØØ | Ø.ØØ | Ø.ØØ | Ø.ØØ | 1932.ØØ |
| 2 | Ø.ØØ | -1932.ØØ | Ø.ØØ | Ø.ØØ | Ø.ØØ | -1932.ØØ |
| | -Ø.Ø1 | 1932.ØØ | Ø.ØØ | Ø.ØØ | Ø.ØØ | 1932.ØØ |
| 3 | Ø.ØØ | -1932.ØØ | Ø.ØØ | Ø.ØØ | Ø.ØØ | -1932.ØØ |
| | -Ø.Ø3 | 1932.ØØ | Ø.ØØ | Ø.ØØ | Ø.ØØ | 1932.ØØ |
| 4 | Ø.ØØ | -1449.ØØ | Ø.ØØ | Ø.ØØ | Ø.ØØ | 2173.5Ø |
| | Ø.ØØ | 1449.ØØ | Ø.ØØ | Ø.ØØ | Ø.ØØ | -2173.5Ø |
| 5 | Ø.ØØ | -1449.ØØ | Ø.ØØ | Ø.ØØ | Ø.ØØ | 2173.5Ø |
| | Ø.ØØ | 1449.ØØ | Ø.ØØ | Ø.ØØ | Ø.ØØ | -2173.5Ø |
| 6 | Ø.ØØ | -1449.ØØ | Ø.ØØ | Ø.ØØ | Ø.ØØ | 2173.5Ø |
| | Ø.ØØ | 1449.ØØ | Ø.ØØ | Ø.ØØ | Ø.ØØ | -2173.5Ø |
| 7 | Ø.ØØ | -483.ØØ | Ø.ØØ | Ø.ØØ | Ø.ØØ | -241.5Ø |
| | Ø.Ø1 | 483.ØØ | Ø.ØØ | Ø.ØØ | Ø.ØØ | 241.5Ø |
| 8 | Ø.ØØ | -483.ØØ | Ø.ØØ | Ø.ØØ | Ø.ØØ | -241.5Ø |
| | Ø.Ø1 | 483.ØØ | Ø.ØØ | Ø.ØØ | Ø.ØØ | 241.5Ø |
| 9 | Ø.ØØ | -483.ØØ | Ø.ØØ | Ø.ØØ | Ø.ØØ | -241.5Ø |
| | Ø.Ø3 | 483.ØØ | Ø.ØØ | Ø.ØØ | Ø.ØØ | 241.5Ø |
| 1Ø | Ø.ØØ | Ø.ØØ | Ø.ØØ | Ø.ØØ | Ø.ØØ | Ø.ØØ |
| | -37.51 | -7728.ØØ | Ø.ØØ | Ø.ØØ | Ø.ØØ | Ø.ØØ |
| 11 | Ø.ØØ | Ø.ØØ | Ø.ØØ | Ø.ØØ | Ø.ØØ | Ø.ØØ |
| | 37.51 | -3864.ØØ | Ø.ØØ | Ø.ØØ | Ø.ØØ | Ø.ØØ |

********** END OF DATA FROM INTERNAL STORAGE **********

25. PARAMETER
26. CODE AISC
27. CHECK CODE ALL

STAAD-III CODE CHECKING - (AISC)
**********

ALL UNITS ARE - POUN FEET (UNLESS OTHERWISE NOTED)

| MEMBER | TABLE | RESULT/ FX | CRITICAL COND/ MY | RATIO/ MZ | LOADING/ LOCATION |
|---|---|---|---|---|---|
| 1 | ST W8X 10 | PASS | AISC- H1-3 | 0.227 | 1 |
| | | 2573.76 C | 0.00 | -824.93 | 10.00 |
| 2 | ST W8X 15 | PASS | AISC- H1-3 | 0.136 | 1 |
| | | 147.18 C | 0.00 | 2273.93 | 0.00 |
| 9 | ST W8X 10 | PASS | AISC- H1-3 | 0.170 | 1 |
| | | 1290.24 C | 0.00 | 845.10 | 0.00 |
| 4 | ST W8X 15 | PASS | AISC- H2-1 | 0.153 | 1 |
| | | 29.29 T | 0.00 | 2619.39 | 0.00 |
| 5 | ST W8X 15 | PASS | AISC- H2-1 | 0.145 | 1 |
| | | 80.37 T | 0.00 | 2479.44 | 0.00 |
| 6 | ST W8X 15 | PASS | AISC- H1-3 | 0.062 | 1 |
| | | 0.01 | 0.00 | 1449.00 | 0.00 |
| 7 | ST W8X 15 | PASS | AISC- H1-3 | 0.062 | 1 |
| | | 0.01 | 0.00 | 1449.00 | 0.00 |
| 8 | ST W8X 15 | PASS | AISC- H1-3 | 0.062 | 1 |
| | | 0.03 | 0.00 | 1449.00 | 0.00 |
| 3 | ST W8X 10 | PASS | AISC- H1-1 | 0.311 | 1 |
| | | 5148.00 C | 0.00 | -655.33 | 10.00 |
| 10 | ST W8X 10 | PASS | AISC- H1-3 | 0.200 | 1 |
| | | 2580.00 C | 0.00 | 619.33 | 10.00 |
| 11 | ST W8X 10 | PASS | AISC- H1-1 | 0.398 | 1 |
| | | 7728.00 C | 0.00 | -375.11 | 0.00 |
| 12 | ST W8X 10 | PASS | AISC- H1-1 | 0.220 | 1 |
| | | 3864.00 C | 0.00 | 375.11 | 0.00 |

********** END OF TABULATED RESULT OF DESIGN **********

28. STEEL TAKE OFF

STEEL TAKE-OFF

| PROFILE | LENGTH(FEET) | WEIGHT(POUN) |
|---|---|---|
| ST W8X 10 | 60.00 | 603.130 |
| ST W8X 15 | 36.00 | 542.817 |
| | TOTAL = | 1145.95 |

********** END OF DATA FROM INTERNAL STORAGE **********

29. FINISH

********** END OF STAAD-III **********

**** DATE= NOV 23,1994 TIME= 12:53:48 ****

```
**********************************************************
*        For questions on STAAD-III/ISDS, contact:      *
*                RESEARCH ENGINEERS, Inc at             *
*        Ph: (714) 974-2500   Fax:  (714) 974-4771      *
**********************************************************
```

SUBJECT

COMPUTATION

COMPUTED BY CHECKED BY DATE

DESIGN THE CONNECTIONS

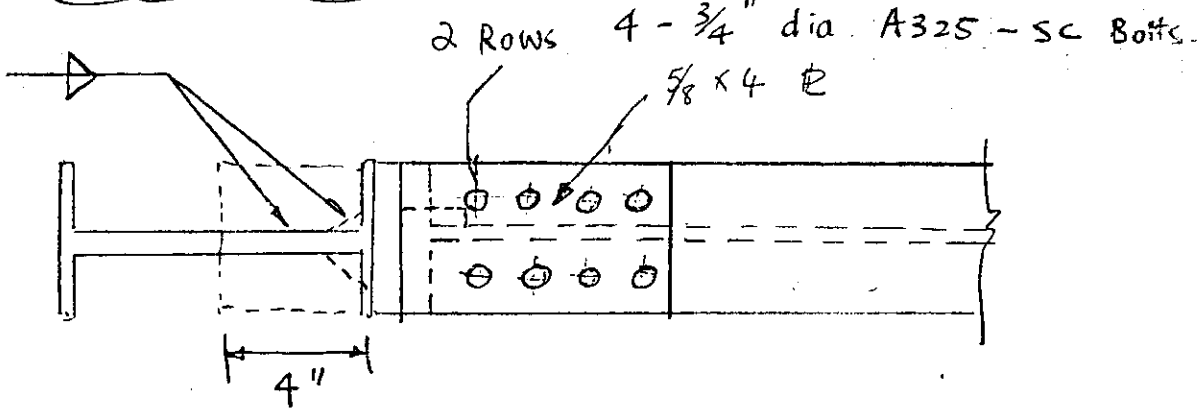


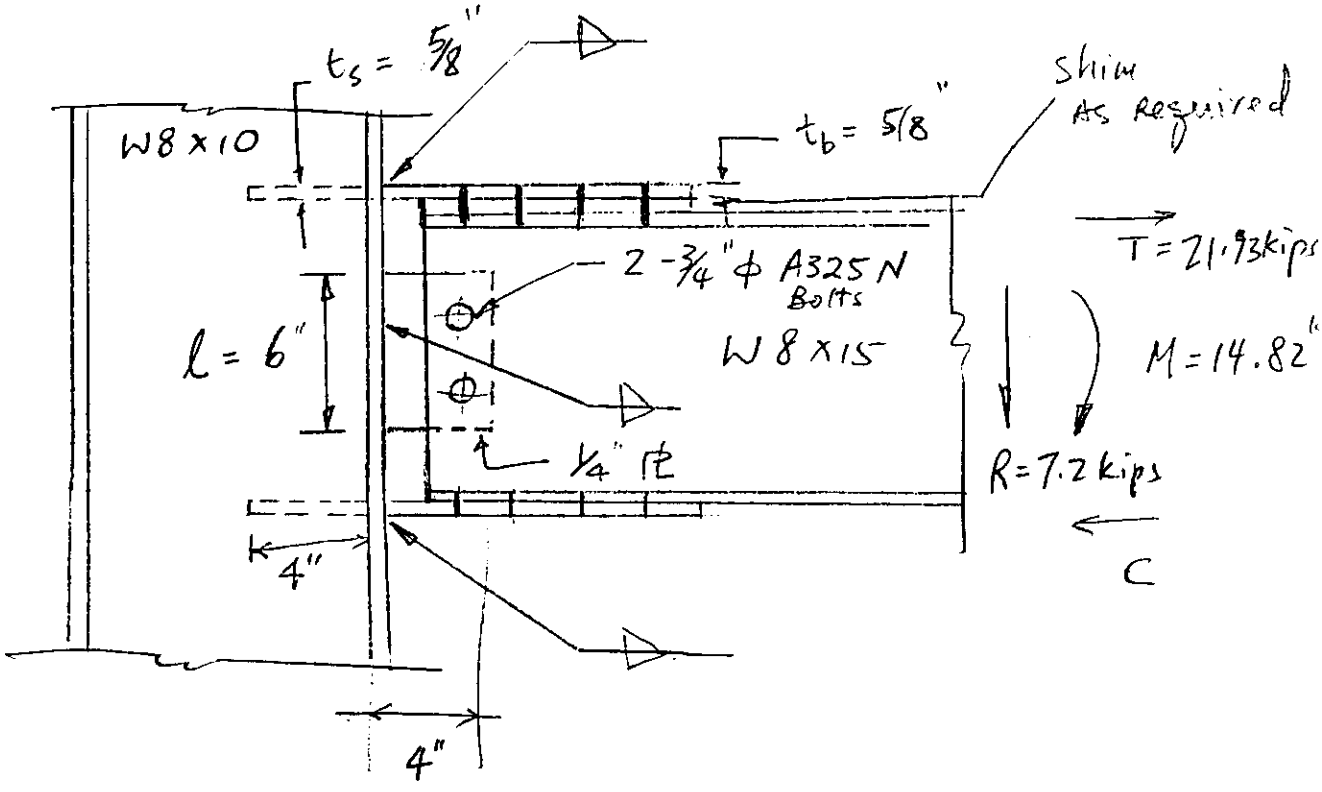


NOTE: ALL WELD SIZE IS 3/16 IN FILLET WELD FULL LENGTH ON BOTH SIDE

SUBJECT
COMPUTATION MOMENT CONNECTIONS FOR 642 & 642 STAIRWELL
COMPUTED BY CHECKED BY DATE

DESIGN MOMENT CONNECTION FOR a W8x15 beam framing into each side of W8x10 column.

(1) The DESIGN MOMENT = 14.82 kip-ft
END REACTION = 7.2 kips
} Results of DEAD + WIND LOADS

ALL MATERIAL IS ASTM A36 STEEL
$F_t$ = 22 ksi (for beam, $F_b$ = 24 ksi)

USE A325 bolts & E70XX electrodes

from AISC Properties & Dimensions Tables, Part 1:

Beam (W8x15): d = 8.11 in  $b_f$ = 4.015 in
$I_{xx}$ = 48 in$^4$  $t_w$ = 0.245 in  $t_f$ = 0.315 in
$S_{xx}$ = 11.8 in$^3$

Column (W8x10): d = 7.89 in  $b_f$ = 4 in
$t_{wc}$ = 0.170 in  $t_f$ = 0.205 "
k = 5/8 in  T = 6 5/8 "

M = 14.82 kip-ft

$S_{req} = (14.82 \times 12)/24 = 7.41 \text{ in}^3 < 11.8 \text{ in}^3$
∴ O.K.

Assume 2 rows of 3/4-in dia. A325 bolts in a slip-critical connection.

SUBJECT

COMPUTATION

COMPUTED BY CHECKED BY DATE

(A) Beam - flange Area Reduction

$A_{fg}$ (gross) $= 4.015 \times 0.315 = 1.265 \text{ in}^2$

$A_{fn}$ (net) $= 1.265 - (3/4 + 0.125)2\,(0.315)$

$= 1.265 - 0.551$

$= 0.714 \text{ in}^2$

$0.5\, F_u A_{fn} = 0.5(58)(0.714) = 20.69$ kips

$0.6\, F_y A_{fg} = 0.6(36)(1.265) = 27.324$ kips

Since 20.7 kips < 27.324 kips, the effective tension flange area is:

$A_{fe} = \frac{5}{6}\left(\frac{58}{36}\right)(0.714) \text{ in}^2$

$= 0.96 \text{ in}^2$

$I_{net} = 48 - \left[(1.265 - 0.714)\left(\overbrace{\frac{8.11 - 0.315}{2}}^{15.19}\right)^2\right]$

$= 48 - 8.37$

$= 39.63 \text{ in}^4$

$S_{(NET)} = 39.63 / 4.06 = 9.76 \text{ in}^3 > 7.41 \text{ in}^3$

∴ BEAM IS O.K.

SUBJECT

COMPUTATION

COMPUTED BY CHECKED BY DATE

B. Horizontal force at BEAM FLANGE:

$$T = (M \times 12)/d = (14.82 \times 12)/8.11$$
$$= 21.93 \text{ kips}$$

C. DESIGN FLANGE PLATES:

TRY plate 5/8 X 4.

GROSS SECTION

$$f_t = \frac{21.93 \text{ kips}}{5/8 \times 4} = 8.77 \text{ ksi} < 22.0 \text{ ksi}$$
$\therefore$ O.K.

NET SECTION

NET AREA $= 5/8\,[\,(4) - 2(13/16 \text{ OVERSIZE} + 1/16 \text{ NET})\,]$
TABLE J3.1

$$f_n = 5/8\,[4 - 1.75]$$
$$= 1.406 \text{ in}^2 < 0.85 \times A_f$$
$$= 0.85 \times 4 \times 5/8$$
$$= 2.125 \text{ in}^2$$

$$f_t = \frac{21.93}{1.406} = 15.6 < 29.0 \text{ ksi}$$
$\therefore$ O.K.

D. FLANGE CONNECTION

Assume 3/4-in dia. A325 bolts in a slip-critical connection in oversize holes, clean mill scale.

No. bolts required:

$T/r_v = 21.93 \text{ kips} / r_v = 6.63^k (F_u = 15 \text{ ksi})$

$= 3.31$ (TABLE I-D)

USE: 4 - 3/4-in. dia A325-SC bolts.

E. WEB CONNECTION

Assume 3/4-in. dia. A325 bolts in a bearing-type connection with threads included in the shear plane

No. of bolts required for shear:

$R/r_v = 7.2 \text{ kip} / r_v = 9.3 \quad (F_u = 21 \text{ ksi})$

$= 0.774$ (TABLE I-D)

TRY: 2 BOLTS

SUBJECT
COMPUTATION
COMPUTED BY CHECKED BY DATE

(I) Check bearing on BEAM WEB:

Assume $1\frac{1}{2}$ in end distance

$1\frac{1}{2}$ in $> 1\frac{1}{2}(3/4) = 1.125$ in USE TABLE 1-E

FROM TABLE 1-E for $F_u = 58$ ksi, $t_w = 0.245$ in

Allowable load $= 52.2(0.245)2 = 12.789 \times 2$
$= 25.578$ kips

USE 2 – 3/4 – in A325 – N bolts $> 7.2$ kips
∴ o.k

DESIGN SHEAR PLATE

TRY A SHEAR PLATE WITH 3" pitch,
1½ in end distance, $\ell = 6$ in

$\ell_{net} = 6 - 2(\frac{3}{4} + 1/8) = 4.25$"

$F_{rp} = 0.30 F_u = 0.3(58)$ 17.4 ksi

$t_A = 7.2 \text{ kips} / 17.4 \times 4.25 = 0.097$

TRY 1/4 - in PLATE

(E) Check bearing:

From Table 1-E for $F_u = 58$ ksi, $t = 1/4$ in

Allowable load = 13.1 kips / bolt

$13.1 \text{ kip/bolts} > 7.2k/2 = 3.6 \text{ kips/bolt}$

∴ O.K.

Determine required weld to column flange:

$$D_{min} = \frac{7.2 \text{ kips}}{2 \times 0.928 \times 4} = 0.969$$

Since the thickness is 1/4 in, use 3/16-in fillet weld (AISC ASD Specification Table J2.4 5-67)

(1) Use ~~SHEAR~~ CONNECTOR PLATE 1/4 x 4 x 6 in welded to the column flange with 3/16-in filled welds full length each side.

(2) Designate on the drawings that weld is to be built out to obtain 5/16-in throat thickness.

SUBJECT
COMPUTATION
COMPUTED BY CHECKED BY DATE

(F) Determine need for column web stiffeners

Horizontal force at stiffeners

$$= \frac{M \times 12}{d + t_b = 5/8}$$

$$= \frac{14.82 \text{ k-ft} \times 12}{8.11'' + 5/8}$$

$$= \frac{14.82 \times 12}{8.735}$$

$$= 20.36 \text{ kips}$$

(3-12) $P_{bf}$ = max column web resisting force
5-80 at beam compression flange, kips.
(K.2)

$$= 5/3 \times 20.36 \text{ kips}$$
$$= 33.93 \text{ kips.}$$

Check EQ (K 1-9)

$$A_{st} = \frac{P_{bf} - F_{yc} t_{wc} (t_b + 5k)}{F_{yst}}$$

$F_{yc} = 36$ $t_{wc} = 0.17''$ $t_b = 5/8$

$5k = 5(5/8)$ $F_{yst} = 36$

SUBJECT
COMPUTATION
COMPUTED BY CHECKED BY DATE

(F)

$$A_{st} = \frac{33.93 - 36(0.17)[5/8 + 5 \times 5/8]}{36}$$

$$= 0.305 \text{ in}^2$$

NOTE, SINCE the answer is positive, stiffeners are required at both the tension & compression flanges.

Section K1.8 :-

$$w + t_{wc}/2 \geq b/3$$

$$w = (b/3) - (t_{wc}/2)$$

where $w$ = stiffener width
$t_{wc}$ = thickness of column web
$b$ - width of connecting plate or beam flange

$$w = 4.015/3 - 0.17/2$$
$$= 1.253'' \text{ (min.)}$$

Stiffness thickness : $t_s \geq t_b/2$

$$t_s = (5/8)(\tfrac{1}{2}) = 0.3125 \geq t_b/2 = \frac{0.315}{2} = 0.16''$$

SUBJECT
COMPUTATION
COMPUTED BY CHECKED BY DATE

(F) For practical detailing considerations,

(a) use a stiffener 1/2" x 3 in on each side at top & bottom flanges

(b) clip corner 3/4" x 3/4"

Check stiffeners:

Area furnished = $3 \times 1/2 \times 2 = 3 \text{ in}^2 > A_{st} = 0.31 \text{ in}^2$ O.K.

Width-thickness ratio [SECT B 5.1]

$w/t = 2/0.5 = 4.0 \leq 95/\sqrt{F_y} = 15.8$ O.K

Length of stiffener should not less than one-half of the column depth

LENGTH = $7.89/2 = 3.945$ in (USE 4 in)

SUBJECT

COMPUTATION

COMPUTED BY CHECKED BY DATE

(H) STIFFENER WELD REQUIREMENTS :-

Use fillet welds, E70XX

From AISC ASD Specifn Table J2.4 :-

Min weld size to column web : 3/16 in

Min weld size to column flange : 3/16 in

Weld lengths :

Determine forces at column web to be resisted by stiffener welds :

$$P_{bf} - F_{yc} t_{wc} (t_b + 5k)$$

$$= 33.93^k - 36 (0.17) (5/8 + 5 \times 5/8)$$

$$= 33.93 - 22.95$$

$$= 10.98 \text{ kips}$$

Determine forces at tension flange to be resisted by stiffener welds :

Using Eq. (K1-1) :

$$P_{bf} - \frac{t_f^2 F_{yc}}{0.16} = 33.93 - \frac{(.205)^2 (36)}{0.16}$$

$$= 33.93 - 9.46$$

$$= 24.5 \text{ kips}$$

∴ Tension flange force governs.

SUBJECT

COMPUTATION

COMPUTED BY CHECKED BY DATE

(H) Weld Requirements:

Load in stiffener = 24.5/2 = 12.25 kips each side

$$l_w = \frac{12.25}{2 \times 3 \times 0.928 \times 1.67}$$

= 1.32 in (min. length of 3/16-in fillet weld to web)

Make full length of stiffener: 4" − 3/4" = 3 1/4" Both Sides.

$$l_f = \frac{12.25}{2 \times 3 \times 0.928 \times 1.67}$$

= 1.32 in (min. length of 3/16-in fillet weld to tension flange

Make weld full width of stiffener

= 3 − 3/4" = 2 1/4" in Both Sides

SUBJECT

COMPUTATION MASONARY WALL STRENGTH CHECK

COMPUTED BY CHECKED BY DATE

LOADING FOR MASONARY WALL

$= (19.5'/2)[100 + 23 + \frac{7}{12}(150)]$ psf

$= 2052.4$ p/ft

SAY 2200 lb/ft

The Above Loading will be the input for the (US Army Crp Engr. Program TM 5-809-3)

```
IMMMMMMMMMMMMMMMMMMMMMMMMMMMMMMMMMMMMMMMMMMMMMMMMMMMMMMMMMMMMMMMMMMMMM;
:                                                                     :
:                              DEVENS                                 :
:                                                                     :
GDDDDDDDDDDDDDD INPUT DDDDDDDDDDDDDBDDDDDDDDDDDDD OUTPUT DDDDDDDDDDDDD6
:                                  3                                  :
: 1 Analysis Mode DDDDDDD> 2       3 KD = 1.567 in     I =   94.80 in4 :
: 2 Mortar Type DDDDDDDDD> N       3 SC =  60.49 in3  ST =  42.27 in3 :
: 3 Nominal Thickness DDD> 8       3    MC =   1.68 ft-k              :
: 4 Num. Stiffener Bars D> 1       3    MT =   2.92 ft-k              :
: 5 Stiffener Spacing DDD> 32      3                                  :
: 6 Tensile Steel Bar # D> 6       3 COMPRESSION Controls Capacity    :
: 7 Steel Grade DDDDDDDDD> 60      3                                  :
: 8 Wall Height DDDDDDDDD> 10      3                                  :
: 9 Axial Wall Load DDDDD> 2200    3                                  :
: 10 Ecc. of Axial Load D> 0       3 Combined Stress Ratio =  .344    :
: 11 Wind Load DDDDDDDDDD> 0       3 Axial Stress Ratio =  .449       :
:                                  3 Wall Section is Adequate         :
:                                  3                                  :
GDDDDDDDDDDDDDDDDDDDDDDDDDDDDDDDDDADDDDDDDDDDDDDDDDDDDDDDDDDDDDDDDDDD6
:                                                                     :
:   Do you wish to make another analysis? (Y or N)                    :
:   DDDDDDD>                                                          :
:                                                                     :
HMMMMMMMMMMMMMMMMMMMMMMMMMMMMMMMMMMMMMMMMMMMMMMMMMMMMMMMMMMMMMMMMMMMMM<
```

SUBJECT
COMPUTATION FOOTING DESIGN
COMPUTED BY CHECKED BY DATE

| | | | | |
|---|---|---|---|---|
| MEM 1 | JT 1 | 11.5 kips | | |
| 2 | 2 | 34.8 kips | ← GOVERNS | |
| 4 | 4 | 21.5 kips | (SEE Pg –) | |

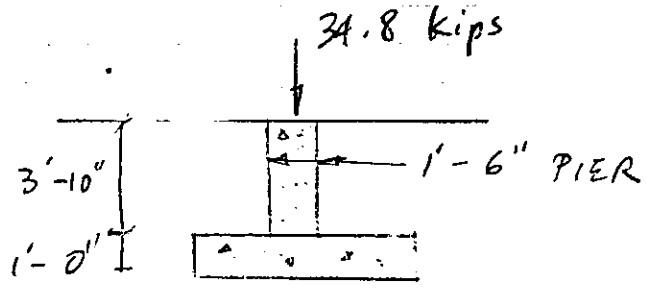


$q_a$ = Allowable Bearing Pressure = 4000 PSF

COMPUTER EFFECTIVE PREESURE TO RESIST COLUMNN LOAD DEDUCT THE FOLLOWING FROM $q_a$

SLAB $\frac{3}{12}(150) = 37.5$ PSF

Assume $\gamma_{DRY} = 110$ PCF

WEIGHT DIFFERENCE BETWEEN CONCRETE FOUNDATION AND SOIL $3.33(150-110) = 133$ PSF

$$q_{EFF} = 4000 - 37.5 - 133$$
$$= 3829.5 \text{ psf}$$

SUBJECT
COMPUTATION FOOTING
COMPUTED BY CHECKED BY DATE

CONSIDER EFFECTIVE SOIL PRESSURE

$q_{EFF} = 3829.5$ PSF

$$A_{req} = \frac{34.8 \times 1000}{3829.5} = 9.08T \text{ FT}^2$$

USE $3\frac{1}{2}' \times 3\frac{1}{2}'$ $A = 12.25 \text{ FT}^2 > 9.08 \text{ FT}^2$

DESIGN STEEL FOR FOOTING

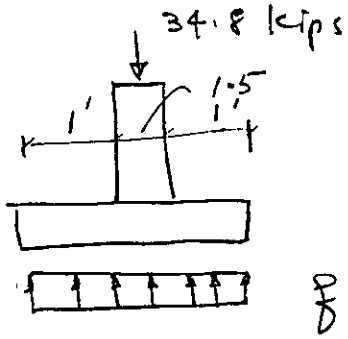


$$q_{NET} = \frac{34.8}{12.25} = 2.84 \text{ KSF}$$

$$M_{max} = 2.84(1.5)(3.5)(1/2) = 7.46 \text{ K-FT}$$

WORKING STRESS DESIGN ; $F_c' = 3000$ psi , $F_y = 60000$

$f_c = 0.45(3000) = 1350$ psi ; $f_s = 20{,}000$ psi

R = DESIGN CONSTANT = 226

$$M = Rbd^2$$

$$d = 12'' - 3'' \text{ (COVER)} - 0.375\left(\frac{\phi}{2}\right) = 8.63''$$

$$d_{REQ} = \sqrt{\frac{7.46(12000)}{3.5(12)(226)}} = 3.07 < 8.63'' \text{ PROVIDED O.K.}$$

$$A_{s_{REQ}} = \frac{7.46^{k-1}(12000)}{20{,}000(7/8)(8.63)} = 0.593 \text{ IN}^2$$

SUBJECT

COMPUTATION FOOTING

COMPUTED BY CHECKED BY DATE

CHECKING MINIMUM REINFORCEMENT REQUIRED

$$A_{s\,MIN} = F_y = 200/60{,}000 = 0.0033$$

$$A_{s\,MIN} = 0.0033\,(3\tfrac{1}{2} \times 12)\,(8.63) = 1.196$$

USE 4 #5 E. W. $A_s = 4(0.31) = 1.24\ in^2 > 1.196\ in^2$

∴ O.K.

(a) CHECK BEAM SHEAR AT DISTANCE "d" FROM FACE OF PIER

$$V = 2.84\left(1.5 - \frac{8.63}{12}\right)(3.5) = 7.76^{\,kip}$$

$$v = \frac{7.76\,(1000)}{8.63 \times (12 \times 3.5)} = 21.41\ psi$$

$$v_c = 1.1\sqrt{F'_c} = 1.1\sqrt{3000} = 60.25\ psi > 21.41\ p$$

∴ O.K.

(b) CHECK PUNCHING SHEAR AT DISTANCE "d/2" FROM FACE OF PIER

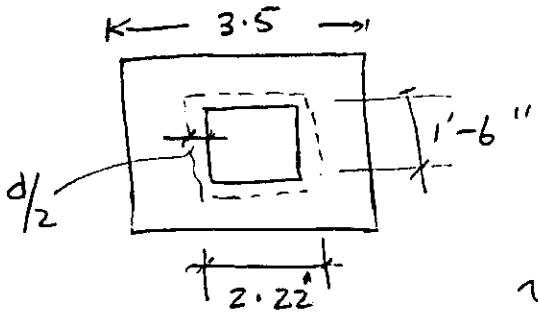


$d = 8.63''$ $\frac{d}{2} = 4.315''$

$$V = 2.84\,(3.5^2 - 1.5^2) = 28.4\ kips$$

$$v = \frac{28.4^k\,(1000)}{(4 \times 2.22 \times 12)(8.63)} = 30.88\ psi < 60\ psi$$

∴ O.K.

SUBJECT

COMPUTATION

COMPUTED BY CHECKED BY DATE

DESIGN REINFORCEMENT FOR PIER —

Assume Cross Section Provided is GREATER

$\therefore A_{S_{min}} = 0.01\, A_{Gross}/2$

$= 0.01\,(18)^2/2 = 1.62 \text{ in}^2$

TRY 4 # 7 $A_S = 4(0.60) = 2.40 \text{ in}^2$

ALLOWABLE $P = 0.32\,[0.85 f_c' (A_g - A_{st} + f_y A_{st})]$

$= \frac{0.32}{1000}[0.85(3000)(18^2 - 2.4) + 60000(2.4)]$

$= 308.5^k > 34.8$ Kips O.K

USE 4 # 7 VERT W/ # 3 LATERAL TIES AT 12" O.C.

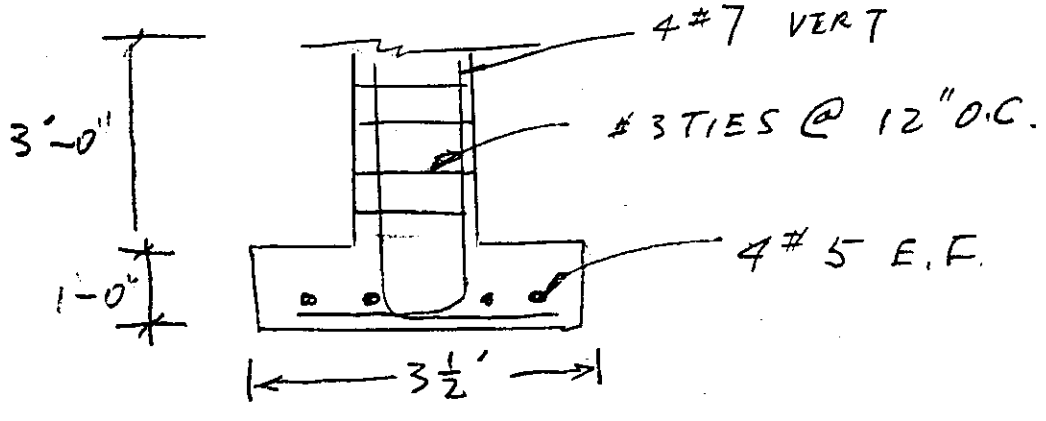


3½' X 3½' FOOTING

SUBJECT
COMPUTATION
COMPUTED BY CHECKED BY DATE

STAIR WELL WALL CONTINUOUS FOOTING

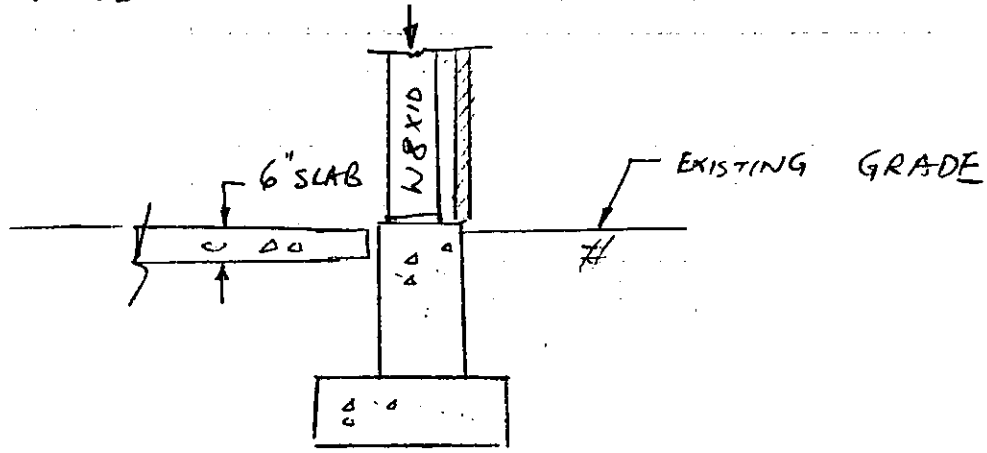


Assume $\gamma_{DRY} \simeq 110$ PCF

$q_a$ allowable bearing pressure = 4000 psf

Calculate the effective pressure to resist loads

SLAB 0.5 (150) = 75 psf

$q_{EFF}$ = 4000 psf − 75 psf
= 3925 psf

(A) ROOF

D.L. = 23 psf ( 12.5 + 8.5 ) $\frac{1}{2}$
= 241.5 lb/ft

L.L. = 28.35 psf (12.5 + 8.5) $\frac{1}{2}$
= 297.68 lb/ft

SUBJECT
COMPUTATION
COMPUTED BY CHECKED BY DATE

(B) 2 FLOOR & 1ST FLOOR

LIGHT WT CONC

$$D.L. = (3/12)(110)(12.5 + 8.5)\tfrac{1}{2}$$
$$= 288.75 \text{ lb/FT}$$

$$L.L. = 100 \text{ psf } (12.5 + 8.5)\tfrac{1}{2}$$
$$= 1050 \text{ lb/ft}$$

Thus the total load for the continuous footing

$$= 241.5 + 297.68 + (288.75 + 1050)2$$

$$= 3216.68 \text{ lb/ft}$$

$$A_{req} = \frac{3216.68}{3925} = 0.82 \text{ FT}^2$$

USE 2'-6" WIDE CONTINUOUS FOOTING

$$A = 2.5 \text{ FT}^2 > 0.82 \text{ FT}^2$$
O.K.

PROVE MIN. STEEL IN FOOTING

$$A_{s\,min} = 200/F_y = 200/60000 = 0.0033$$

$$d = 12'' - 3''(\text{cover}) - 0.375''\left(\frac{\phi}{2}\right) = 8.8125''$$

$$A_{s\,min\,LONG} = 0.0033\,(30)(8.8125) = 0.8724 \text{ in}$$

USE 4 # 4 CONTINUOUS $= 4 \times 0.2$
$= 0.8 \text{ in}^2 \simeq 0.8$

SUBJECT

COMPUTATION

COMPUTED BY CHECKED BY DATE

STAIRWELL WALL FOOTING @ 14.1 & 14.2 ON LINE L.1

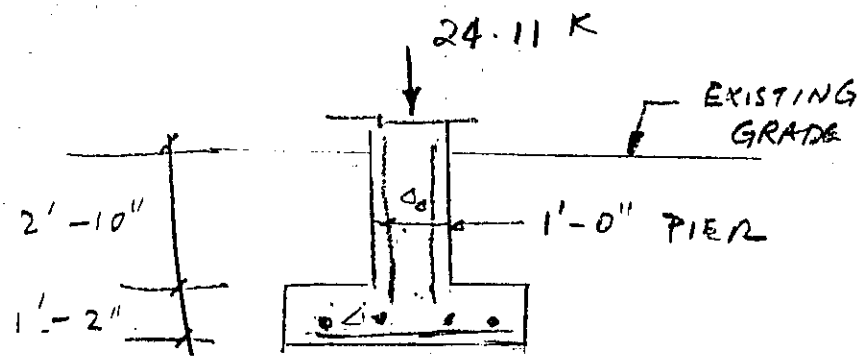


CONSIDER EFFECTIVE SOIL PRESSURE - SEE PREVIOUS SHEET

$q_{EFF} = 3925$ psf

$$A_{req} = \frac{24.11 \times 1000}{3925} = 6.14 \text{ ft}^2$$

USE 3' x 3' FOOTING $A = 9 \text{ ft}^2 > 6.14 \text{ ft}^2$

DESIGN STEEL FOR FOOTING

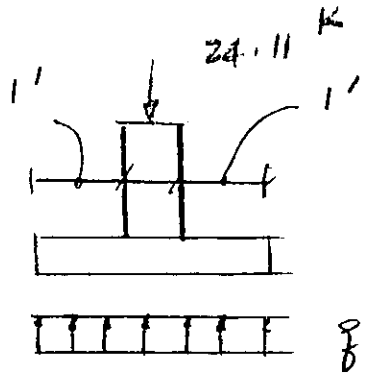


$$q_{NET} = \frac{24.11}{9} = 2.68 \text{ ksf}$$

$$M_{MAX} = 2.68\,(1)(3)\left(\tfrac{1}{2}\right) = 4.02 \text{ K-ft}$$

SUBJECT

COMPUTATION

COMPUTED BY CHECKED BY DATE

WORKING STRESS DESIGN : $F_c' = 3000$ psi

$F_y = 60{,}000$

$f_c = 0.45(3000) = 1350$ psi , $f_s = 20{,}000$ psi

$R$ = DESIGN CONSTANT = 226

$M = Rbd^2$

$d = 12'' - 3''$ (COVER) $- 0.375\left(\frac{\phi}{2}\right) = 8.63''$

$$d_{req} = \sqrt{\frac{8.63(12000)}{3(12)(226)}} = 3.57'' < 8.63'' \therefore \text{O.K}$$

$$A_{s\,req} = \frac{8.63(12000)}{20000(8.63)(7/8)} = 0.686 \text{ in}^2$$

CHECK MINIMUM Reinforcement Required

$$A_{s\,min} = 200/F_y = 200/60{,}000 = 0.0033$$

$$A_{s\,min} = 0.0033(3 \times 12)(8.63) = 1.025 \text{ IN}^2$$

USE 4 - #5 E.W $A_s = 5(0.31) = 1.55 \text{ in}^2$

$> 1.025$

$\therefore$ O.K

SUBJECT

COMPUTATION

COMPUTED BY CHECKED BY DATE

① CHECK BEAM SHEAR AT DISTACE "d" FROM FACE OF PIER

$$V = 2.68\left(1 - 8.63/12\right)(3) = 2.26^{k}$$

$$v = \frac{2.26\ (1000)}{8.63\ (3 \times 12)} = 7.27 \text{ psi}$$

$$v_c = 1.1\sqrt{F_c'} = 1.1\sqrt{3000} = 60 \text{ psi} > 7.27$$

$\therefore$ O.K

② CHECK PUNCHING SHEAR AT DIST. D/2 FROM ~~FROM~~ FACE OF PIER

$$d = 8.63'' \qquad d/2 = 4.315''$$

$$V = 2.68\left(3^2 - 1^2\right) = 21.44^{k}$$

$$v = \frac{21.44\ (1000)}{4 \times (12'' + 8.63'')\ (8.63)}$$

$$= 21440 / 712.15$$

$$= 30.11 \text{ psi} < 60 \text{ psi} \quad \therefore \text{O.K}$$

# ELECTRICAL DESIGN COMPUTATIONS

Receptacle Spacing

Ft. Devens, Building 642

| Room No. | Function | Perim | Rece | End | Spacing Btwn | | | | | | |
|---|---|---|---|---|---|---|---|---|---|---|---|
| | | | Quantity | | | | | | | | |
| 101 | Office | 74.0 | 8 | 4.6 | 13.9 | 23.1 | 32.4 | 41.6 | 50.9 | 60.1 | 69.4 |
| 102 | Office | 67.0 | 7 | 4.8 | 14.4 | 23.9 | 33.5 | 43.1 | 52.6 | 62.2 | 71.8 |
| 103 | Office | 56.0 | 6 | 4.7 | 14.0 | 23.3 | 32.7 | 42.0 | 51.3 | 60.7 | 70.0 |
| 104 | Office | 44.0 | 5 | 4.4 | 13.2 | 22.0 | 30.8 | 39.6 | 48.4 | 57.2 | 66.0 |
| 105 | Office | 64.0 | 7 | 4.6 | 13.7 | 22.9 | 32.0 | 41.1 | 50.3 | 59.4 | 68.6 |
| 106 | Office | 50.4 | 6 | 4.2 | 12.6 | 21.0 | 29.4 | 37.8 | 46.2 | 54.6 | 63.0 |
| 107 | Office | 69.6 | 7 | 5.0 | 14.9 | 24.9 | 34.8 | 44.7 | 54.7 | 64.6 | 74.6 |
| 108 | Office | | 6 | 0.0 | 0.0 | 0.0 | 0.0 | 0.0 | 0.0 | 0.0 | 0.0 |
| 109 | Office | 27.2 | 3 | 4.5 | 13.6 | 22.7 | 31.7 | 40.8 | 49.9 | 58.9 | 68.0 |
| 110 | Storage | | 1 | 0.0 | 0.0 | 0.0 | 0.0 | 0.0 | 0.0 | 0.0 | 0.0 |
| 111 | Break Rm | 66.4 | 7 | 4.7 | 14.2 | 23.7 | 33.2 | 42.7 | 52.2 | 61.7 | 71.1 |
| 112 | JC | | 1 | 0.0 | 0.0 | 0.0 | 0.0 | 0.0 | 0.0 | 0.0 | 0.0 |
| 113 | Men | | 1 | 0.0 | 0.0 | 0.0 | 0.0 | 0.0 | 0.0 | 0.0 | 0.0 |
| 114 | Conference | | 1 | 0.0 | 0.0 | 0.0 | 0.0 | 0.0 | 0.0 | 0.0 | 0.0 |
| 115 | Vest | | 1 | 0.0 | 0.0 | 0.0 | 0.0 | 0.0 | 0.0 | 0.0 | 0.0 |
| 116 | RrProjSto | | 1 | 0.0 | 0.0 | 0.0 | 0.0 | 0.0 | 0.0 | 0.0 | 0.0 |
| 117 | PhyFitness | | 1 | 0.0 | 0.0 | 0.0 | 0.0 | 0.0 | 0.0 | 0.0 | 0.0 |
| 118 | Wash | | 1 | 0.0 | 0.0 | 0.0 | 0.0 | 0.0 | 0.0 | 0.0 | 0.0 |
| 119 | Vest | | 1 | 0.0 | 0.0 | 0.0 | 0.0 | 0.0 | 0.0 | 0.0 | 0.0 |
| 120 | SupSgt | 21.3 | 3 | 3.6 | 10.7 | 17.8 | 24.9 | 32.0 | 39.1 | 46.2 | 53.3 |
| 120 | SupSgt | 58.0 | 8 | 3.6 | 10.9 | 18.1 | 25.4 | 32.6 | 39.9 | 47.1 | 54.4 |
| 121 | Office | | 1 | 0.0 | 0.0 | 0.0 | 0.0 | 0.0 | 0.0 | 0.0 | 0.0 |
| 122 | Women | | 1 | 0.0 | 0.0 | 0.0 | 0.0 | 0.0 | 0.0 | 0.0 | 0.0 |
| 123 | Sto | | 1 | 0.0 | 0.0 | 0.0 | 0.0 | 0.0 | 0.0 | 0.0 | 0.0 |
| 124 | JC | | 1 | 0.0 | 0.0 | 0.0 | 0.0 | 0.0 | 0.0 | 0.0 | 0.0 |
| 125 | Office | 44.0 | 5 | 4.4 | 13.2 | 22.0 | 30.8 | 39.6 | 48.4 | 57.2 | 66.0 |
| 126 | Office | 35.2 | 4 | 4.4 | 13.2 | 22.0 | 30.8 | 39.6 | 48.4 | 57.2 | 66.0 |
| 127 | Foyer | | 1 | 0.0 | 0.0 | 0.0 | 0.0 | 0.0 | 0.0 | 0.0 | 0.0 |
| 128 | Interview | 35.2 | 4 | 4.4 | 13.2 | 22.0 | 30.8 | 39.6 | 48.4 | 57.2 | 66.0 |
| 128 | Interview | 38.4 | 4 | 4.8 | 14.4 | 24.0 | 33.6 | 43.2 | 52.8 | 62.4 | 72.0 |
| 129 | Office | 40.0 | 5 | 4.0 | 12.0 | 20.0 | 28.0 | 36.0 | 44.0 | 52.0 | 60.0 |
| 130 | Office | 44.8 | 5 | 4.5 | 13.4 | 22.4 | 31.4 | 40.3 | 49.3 | 58.2 | 67.2 |
| 131 | Office | 40.0 | 5 | 4.0 | 12.0 | 20.0 | 28.0 | 36.0 | 44.0 | 52.0 | 60.0 |
| 132 | Office | 32.0 | 4 | 4.0 | 12.0 | 20.0 | 28.0 | 36.0 | 44.0 | 52.0 | 60.0 |
| 133 | Office | 34.0 | 4 | 4.3 | 12.8 | 21.3 | 29.8 | 38.3 | 46.8 | 55.3 | 63.8 |
| 134 | Office | 57.6 | 6 | 4.8 | 14.4 | 24.0 | 33.6 | 43.2 | 52.8 | 62.4 | 72.0 |
| 135 | Office | 57.6 | 6 | 4.8 | 14.4 | 24.0 | 33.6 | 43.2 | 52.8 | 62.4 | 72.0 |
| 136 | Office | 44.0 | 5 | 4.4 | 13.2 | 22.0 | 30.8 | 39.6 | 48.4 | 57.2 | 66.0 |
| 137 | Office | 62.0 | 7 | 4.4 | 13.3 | 22.1 | 31.0 | 39.9 | 48.7 | 57.6 | 66.4 |
| 138 | Office | 96.0 | 10 | 4.8 | 14.4 | 24.0 | 33.6 | 43.2 | 52.8 | 62.4 | 72.0 |
| 139 | Office | | 1 | 0.0 | 0.0 | 0.0 | 0.0 | 0.0 | 0.0 | 0.0 | 0.0 |
| 140 | Office | | 1 | 0.0 | 0.0 | 0.0 | 0.0 | 0.0 | 0.0 | 0.0 | 0.0 |
| 141 | Mail | 61.0 | 7 | 4.4 | 13.1 | 21.8 | 30.5 | 39.2 | 47.9 | 56.6 | 65.4 |
| 142 | Office | 36.8 | 4 | 4.6 | 13.8 | 23.0 | 32.2 | 41.4 | 50.6 | 59.8 | 69.0 |
| 143 | Office | 43.0 | 5 | 4.3 | 12.9 | 21.5 | 30.1 | 38.7 | 47.3 | 55.9 | 64.5 |
| 143 | | 76.8 | 8 | 4.8 | 14.4 | 24.0 | 33.6 | 43.2 | 52.8 | 62.4 | 72.0 |
| 144 | Office | 46.4 | 5 | 4.6 | 13.9 | 23.2 | 32.5 | 41.8 | 51.0 | 60.3 | 69.6 |

| | | | | | | | | | | | | |
|---|---|---|---|---|---|---|---|---|---|---|---|---|
| 145 | Office | | 1 | 0.0 | 0.0 | 0.0 | 0.0 | 0.0 | 0.0 | 0.0 | 0.0 |
| 146 | Office | | 1 | 0.0 | 0.0 | 0.0 | 0.0 | 0.0 | 0.0 | 0.0 | 0.0 |
| 147 | Office | | 1 | 0.0 | 0.0 | 0.0 | 0.0 | 0.0 | 0.0 | 0.0 | 0.0 |
| 148 | Office | | 1 | 0.0 | 0.0 | 0.0 | 0.0 | 0.0 | 0.0 | 0.0 | 0.0 |
| 149 | Office | | 1 | 0.0 | 0.0 | 0.0 | 0.0 | 0.0 | 0.0 | 0.0 | 0.0 |
| 150 | Office | | 1 | 0.0 | 0.0 | 0.0 | 0.0 | 0.0 | 0.0 | 0.0 | 0.0 |
| 151 | Office | | 1 | 0.0 | 0.0 | 0.0 | 0.0 | 0.0 | 0.0 | 0.0 | 0.0 |
| 152 | Office | | 1 | 0.0 | 0.0 | 0.0 | 0.0 | 0.0 | 0.0 | 0.0 | 0.0 |
| 201 | Office | 28.0 | 5 | 2.8 | 8.4 | 14.0 | 19.6 | 25.2 | 30.8 | 36.4 | 42.0 |
| 201 | | 14.0 | 3 | 2.3 | 7.0 | 11.7 | 16.3 | 21.0 | 25.7 | 30.3 | 35.0 |
| 202 | Office | 22.0 | 4 | 2.8 | 8.3 | 13.8 | 19.3 | 24.8 | 30.3 | 35.8 | 41.3 |
| 203 | Office | 38.0 | 7 | 2.7 | 8.1 | 13.6 | 19.0 | 24.4 | 29.9 | 35.3 | 40.7 |
| 204 | Office | 52.8 | 9 | 2.9 | 8.8 | 14.7 | 20.5 | 26.4 | 32.3 | 38.1 | 44.0 |
| 205 | Office | | 1 | 0.0 | 0.0 | 0.0 | 0.0 | 0.0 | 0.0 | 0.0 | 0.0 |
| 206 | Office | | 1 | 0.0 | 0.0 | 0.0 | 0.0 | 0.0 | 0.0 | 0.0 | 0.0 |
| 207 | Office | | 1 | 0.0 | 0.0 | 0.0 | 0.0 | 0.0 | 0.0 | 0.0 | 0.0 |
| 208 | Office | | 1 | 0.0 | 0.0 | 0.0 | 0.0 | 0.0 | 0.0 | 0.0 | 0.0 |
| 209 | Office | 48.0 | 9 | 2.7 | 8.0 | 13.3 | 18.7 | 24.0 | 29.3 | 34.7 | 40.0 |
| 210 | Office | 39.0 | 7 | 2.8 | 8.4 | 13.9 | 19.5 | 25.1 | 30.6 | 36.2 | 41.8 |
| 211 | Office | 23.0 | 4 | 2.9 | 8.6 | 14.4 | 20.1 | 25.9 | 31.6 | 37.4 | 43.1 |
| 212 | Office | | 1 | 0.0 | 0.0 | 0.0 | 0.0 | 0.0 | 0.0 | 0.0 | 0.0 |
| 213 | Office | | 1 | 0.0 | 0.0 | 0.0 | 0.0 | 0.0 | 0.0 | 0.0 | 0.0 |
| 214 | Office | | 1 | 0.0 | 0.0 | 0.0 | 0.0 | 0.0 | 0.0 | 0.0 | 0.0 |
| 215 | Office | | 1 | 0.0 | 0.0 | 0.0 | 0.0 | 0.0 | 0.0 | 0.0 | 0.0 |
| 216 | Office | | 1 | 0.0 | 0.0 | 0.0 | 0.0 | 0.0 | 0.0 | 0.0 | 0.0 |
| 217 | Office | | 1 | 0.0 | 0.0 | 0.0 | 0.0 | 0.0 | 0.0 | 0.0 | 0.0 |
| 218 | Office | 36.0 | 7 | 2.6 | 7.7 | 12.9 | 18.0 | 23.1 | 28.3 | 33.4 | 38.6 |
| 219 | Office | 22.0 | 4 | 2.8 | 8.3 | 13.8 | 19.3 | 24.8 | 30.3 | 35.8 | 41.3 |
| 220 | Office | | 1 | 0.0 | 0.0 | 0.0 | 0.0 | 0.0 | 0.0 | 0.0 | 0.0 |
| 221 | Office | 63.0 | 11 | 2.9 | 8.6 | 14.3 | 20.0 | 25.8 | 31.5 | 37.2 | 43.0 |
| 222 | Office | 36.0 | 7 | 2.6 | 7.7 | 12.9 | 18.0 | 23.1 | 28.3 | 33.4 | 38.6 |
| 223 | Office | 36.0 | 7 | 2.6 | 7.7 | 12.9 | 18.0 | 23.1 | 28.3 | 33.4 | 38.6 |
| 224 | Women | | 1 | 0.0 | 0.0 | 0.0 | 0.0 | 0.0 | 0.0 | 0.0 | 0.0 |
| 225 | JC | | 1 | 0.0 | 0.0 | 0.0 | 0.0 | 0.0 | 0.0 | 0.0 | 0.0 |
| 226 | Alcove | | 1 | 0.0 | 0.0 | 0.0 | 0.0 | 0.0 | 0.0 | 0.0 | 0.0 |
| 227 | Office | | 1 | 0.0 | 0.0 | 0.0 | 0.0 | 0.0 | 0.0 | 0.0 | 0.0 |
| 228 | Office | | 1 | 0.0 | 0.0 | 0.0 | 0.0 | 0.0 | 0.0 | 0.0 | 0.0 |
| 229 | Bath | | 1 | 0.0 | 0.0 | 0.0 | 0.0 | 0.0 | 0.0 | 0.0 | 0.0 |
| 230 | Bath | | 1 | 0.0 | 0.0 | 0.0 | 0.0 | 0.0 | 0.0 | 0.0 | 0.0 |
| 231 | Office | 58.2 | 10 | 2.9 | 8.7 | 14.6 | 20.4 | 26.2 | 32.0 | 37.8 | 43.7 |
| 232 | Office | 56.0 | 10 | 2.8 | 8.4 | 14.0 | 19.6 | 25.2 | 30.8 | 36.4 | 42.0 |
| 233 | Bath | | 1 | 0.0 | 0.0 | 0.0 | 0.0 | 0.0 | 0.0 | 0.0 | 0.0 |
| 234 | Office | | 1 | 0.0 | 0.0 | 0.0 | 0.0 | 0.0 | 0.0 | 0.0 | 0.0 |
| 235 | Office | | 1 | 0.0 | 0.0 | 0.0 | 0.0 | 0.0 | 0.0 | 0.0 | 0.0 |
| 236 | Office | | 1 | 0.0 | 0.0 | 0.0 | 0.0 | 0.0 | 0.0 | 0.0 | 0.0 |
| 237 | Bath | | 1 | 0.0 | 0.0 | 0.0 | 0.0 | 0.0 | 0.0 | 0.0 | 0.0 |
| 238 | Office | | 1 | 0.0 | 0.0 | 0.0 | 0.0 | 0.0 | 0.0 | 0.0 | 0.0 |
| 239 | Office | 56.0 | 10 | 2.8 | 8.4 | 14.0 | 19.6 | 25.2 | 30.8 | 36.4 | 42.0 |
| 240 | Bath | | 1 | 0.0 | 0.0 | 0.0 | 0.0 | 0.0 | 0.0 | 0.0 | 0.0 |
| 241 | Bath | | 1 | 0.0 | 0.0 | 0.0 | 0.0 | 0.0 | 0.0 | 0.0 | 0.0 |

| | | | | | | | | | | | | |
|---|---|---|---|---|---|---|---|---|---|---|---|---|
| 242 | Office | 15.5 | 3 | 2.6 | 7.8 | 12.9 | 18.1 | 23.3 | 28.4 | 33.6 | 38.8 |
| 243 | Office | 32.0 | 6 | 2.7 | 8.0 | 13.3 | 18.7 | 24.0 | 29.3 | 34.7 | 40.0 |
| 244 | Bath | | 1 | 0.0 | 0.0 | 0.0 | 0.0 | 0.0 | 0.0 | 0.0 | 0.0 |
| 245 | Office | 57.0 | 10 | 2.9 | 8.6 | 14.3 | 20.0 | 25.7 | 31.4 | 37.1 | 42.8 |
| 246 | Office | 50.7 | 9 | 2.8 | 8.5 | 14.1 | 19.7 | 25.4 | 31.0 | 36.6 | 42.3 |
| 247 | Bath | | 1 | 0.0 | 0.0 | 0.0 | 0.0 | 0.0 | 0.0 | 0.0 | 0.0 |
| 248 | Bath | | 1 | 0.0 | 0.0 | 0.0 | 0.0 | 0.0 | 0.0 | 0.0 | 0.0 |
| 249 | Office | 42.0 | 8 | 2.6 | 7.9 | 13.1 | 18.4 | 23.6 | 28.9 | 34.1 | 39.4 |
| 250 | Office | | 1 | 0.0 | 0.0 | 0.0 | 0.0 | 0.0 | 0.0 | 0.0 | 0.0 |
| 251 | Office | 70.0 | 12 | 2.9 | 8.8 | 14.6 | 20.4 | 26.3 | 32.1 | 37.9 | 43.8 |
| 252 | Office | 49.0 | 9 | 2.7 | 8.2 | 13.6 | 19.1 | 24.5 | 29.9 | 35.4 | 40.8 |
| 253 | Office | 28.5 | 5 | 2.9 | 8.6 | 14.3 | 20.0 | 25.7 | 31.4 | 37.1 | 42.8 |
| 254 | Office | 46.0 | 8 | 2.9 | 8.6 | 14.4 | 20.1 | 25.9 | 31.6 | 37.4 | 43.1 |
| 255 | Office | 41.0 | 7 | 2.9 | 8.8 | 14.6 | 20.5 | 26.4 | 32.2 | 38.1 | 43.9 |
| 256 | Office | | 1 | 0.0 | 0.0 | 0.0 | 0.0 | 0.0 | 0.0 | 0.0 | 0.0 |
| 257 | Office | | 1 | 0.0 | 0.0 | 0.0 | 0.0 | 0.0 | 0.0 | 0.0 | 0.0 |
| 301 | Office | 45.0 | 8 | 2.8 | 8.4 | 14.1 | 19.7 | 25.3 | 30.9 | 36.6 | 42.2 |
| 302 | Office | 48.0 | 9 | 2.7 | 8.0 | 13.3 | 18.7 | 24.0 | 29.3 | 34.7 | 40.0 |
| 303 | Office | 46.5 | 8 | 2.9 | 8.7 | 14.5 | 20.3 | 26.2 | 32.0 | 37.8 | 43.6 |
| 304 | Office | 73.0 | 13 | 2.8 | 8.4 | 14.0 | 19.7 | 25.3 | 30.9 | 36.5 | 42.1 |
| 305 | Office | | 1 | 0.0 | 0.0 | 0.0 | 0.0 | 0.0 | 0.0 | 0.0 | 0.0 |
| 306 | Office | 46.0 | 8 | 2.9 | 8.6 | 14.4 | 20.1 | 25.9 | 31.6 | 37.4 | 43.1 |
| 307 | Office | | 1 | 0.0 | 0.0 | 0.0 | 0.0 | 0.0 | 0.0 | 0.0 | 0.0 |
| 308 | Office | | 1 | 0.0 | 0.0 | 0.0 | 0.0 | 0.0 | 0.0 | 0.0 | 0.0 |
| 309 | Office | | 1 | 0.0 | 0.0 | 0.0 | 0.0 | 0.0 | 0.0 | 0.0 | 0.0 |
| 310 | Office | 49.0 | 9 | 2.7 | 8.2 | 13.6 | 19.1 | 24.5 | 29.9 | 35.4 | 40.8 |
| 311 | Office | | 1 | 0.0 | 0.0 | 0.0 | 0.0 | 0.0 | 0.0 | 0.0 | 0.0 |
| 312 | Office | | 1 | 0.0 | 0.0 | 0.0 | 0.0 | 0.0 | 0.0 | 0.0 | 0.0 |
| 313 | Office | 47.0 | 8 | 2.9 | 8.8 | 14.7 | 20.6 | 26.4 | 32.3 | 38.2 | 44.1 |
| 314 | Office | | 1 | 0.0 | 0.0 | 0.0 | 0.0 | 0.0 | 0.0 | 0.0 | 0.0 |
| 315 | Office | | 1 | 0.0 | 0.0 | 0.0 | 0.0 | 0.0 | 0.0 | 0.0 | 0.0 |
| 316 | Office | | 1 | 0.0 | 0.0 | 0.0 | 0.0 | 0.0 | 0.0 | 0.0 | 0.0 |
| 317 | Men | | 1 | 0.0 | 0.0 | 0.0 | 0.0 | 0.0 | 0.0 | 0.0 | 0.0 |
| 318 | Office | | 1 | 0.0 | 0.0 | 0.0 | 0.0 | 0.0 | 0.0 | 0.0 | 0.0 |
| 319 | Sto | | 1 | 0.0 | 0.0 | 0.0 | 0.0 | 0.0 | 0.0 | 0.0 | 0.0 |
| 320 | Office | 44.5 | 8 | 2.8 | 8.3 | 13.9 | 19.5 | 25.0 | 30.6 | 36.2 | 41.7 |
| 321 | Office | 36.5 | 7 | 2.6 | 7.8 | 13.0 | 18.3 | 23.5 | 28.7 | 33.9 | 39.1 |
| 322 | Office | 34.5 | 6 | 2.9 | 8.6 | 14.4 | 20.1 | 25.9 | 31.6 | 37.4 | 43.1 |
| 323 | Office | | 1 | 0.0 | 0.0 | 0.0 | 0.0 | 0.0 | 0.0 | 0.0 | 0.0 |
| 324 | ? | | 1 | 0.0 | 0.0 | 0.0 | 0.0 | 0.0 | 0.0 | 0.0 | 0.0 |
| 325 | JC | | 1 | 0.0 | 0.0 | 0.0 | 0.0 | 0.0 | 0.0 | 0.0 | 0.0 |
| 326 | Alcove | | 1 | 0.0 | 0.0 | 0.0 | 0.0 | 0.0 | 0.0 | 0.0 | 0.0 |
| 327 | Office | 58.0 | 10 | 2.9 | 8.7 | 14.5 | 20.3 | 26.1 | 31.9 | 37.7 | 43.5 |
| 328 | Office | 46.0 | 8 | 2.9 | 8.6 | 14.4 | 20.1 | 25.9 | 31.6 | 37.4 | 43.1 |
| 329 | Office | 71.0 | 12 | 3.0 | 8.9 | 14.8 | 20.7 | 26.6 | 32.5 | 38.5 | 44.4 |
| 330 | Office | 53.0 | 9 | 2.9 | 8.8 | 14.7 | 20.6 | 26.5 | 32.4 | 38.3 | 44.2 |
| 331 | Office | 13.0 | 3 | 2.2 | 6.5 | 10.8 | 15.2 | 19.5 | 23.8 | 28.2 | 32.5 |
| 332 | Office | 27.0 | 5 | 2.7 | 8.1 | 13.5 | 18.9 | 24.3 | 29.7 | 35.1 | 40.5 |
| 333 | Office | 49.0 | 9 | 2.7 | 8.2 | 13.6 | 19.1 | 24.5 | 29.9 | 35.4 | 40.8 |
| 334 | Office | | 1 | 0.0 | 0.0 | 0.0 | 0.0 | 0.0 | 0.0 | 0.0 | 0.0 |

| | | | | | | | | | | | |
|---|---|---|---|---|---|---|---|---|---|---|---|
| 335 | Office | | 1 | 0.0 | 0.0 | 0.0 | 0.0 | 0.0 | 0.0 | 0.0 | 0.0 |
| 336 | Office | 47.0 | 8 | 2.9 | 8.8 | 14.7 | 20.6 | 26.4 | 32.3 | 38.2 | 44.1 |
| 337 | Office | | 1 | 0.0 | 0.0 | 0.0 | 0.0 | 0.0 | 0.0 | 0.0 | 0.0 |
| 338 | Office | (336) | 1 | 0.0 | 0.0 | 0.0 | 0.0 | 0.0 | 0.0 | 0.0 | 0.0 |
| 339 | Office | 50.0 | 9 | 2.8 | 8.3 | 13.9 | 19.4 | 25.0 | 30.6 | 36.1 | 41.7 |
| 340 | Office | 49.0 | 9 | 2.7 | 8.2 | 13.6 | 19.1 | 24.5 | 29.9 | 35.4 | 40.8 |
| 341 | Office | 53.0 | 9 | 2.9 | 8.8 | 14.7 | 20.6 | 26.5 | 32.4 | 38.3 | 44.2 |
| 342 | Office | 38.0 | 7 | 2.7 | 8.1 | 13.6 | 19.0 | 24.4 | 29.9 | 35.3 | 40.7 |
| 343 | Office | 29.0 | 5 | 2.9 | 8.7 | 14.5 | 20.3 | 26.1 | 31.9 | 37.7 | 43.5 |
| 344 | Office | 36.0 | 7 | 2.6 | 7.7 | 12.9 | 18.0 | 23.1 | 28.3 | 33.4 | 38.6 |
| 345 | Office | 49.0 | 9 | 2.7 | 8.2 | 13.6 | 19.1 | 24.5 | 29.9 | 35.4 | 40.8 |
| 346 | Office | | 1 | 0.0 | 0.0 | 0.0 | 0.0 | 0.0 | 0.0 | 0.0 | 0.0 |
| 347 | Office | | 1 | 0.0 | 0.0 | 0.0 | 0.0 | 0.0 | 0.0 | 0.0 | 0.0 |
| Building 644 | | | | | | | | | | | |
| 101 | Storage | | 1 | 0.0 | 0.0 | 0.0 | 0.0 | 0.0 | 0.0 | 0.0 | 0.0 |
| 102 | Storage | | 1 | 0.0 | 0.0 | 0.0 | 0.0 | 0.0 | 0.0 | 0.0 | 0.0 |
| 103 | Storage | | 1 | 0.0 | 0.0 | 0.0 | 0.0 | 0.0 | 0.0 | 0.0 | 0.0 |
| 104 | Storage | | 1 | 0.0 | 0.0 | 0.0 | 0.0 | 0.0 | 0.0 | 0.0 | 0.0 |
| 105 | Storage | | 1 | 0.0 | 0.0 | 0.0 | 0.0 | 0.0 | 0.0 | 0.0 | 0.0 |
| 106 | Storage | | 1 | 0.0 | 0.0 | 0.0 | 0.0 | 0.0 | 0.0 | 0.0 | 0.0 |
| 107 | Storage | | 1 | 0.0 | 0.0 | 0.0 | 0.0 | 0.0 | 0.0 | 0.0 | 0.0 |
| 108 | Storage | | 1 | 0.0 | 0.0 | 0.0 | 0.0 | 0.0 | 0.0 | 0.0 | 0.0 |
| 109 | Storage | | 1 | 0.0 | 0.0 | 0.0 | 0.0 | 0.0 | 0.0 | 0.0 | 0.0 |
| 110 | Storage | | 1 | 0.0 | 0.0 | 0.0 | 0.0 | 0.0 | 0.0 | 0.0 | 0.0 |
| 111 | Storage | | 1 | 0.0 | 0.0 | 0.0 | 0.0 | 0.0 | 0.0 | 0.0 | 0.0 |
| 112 | Storage | | 1 | 0.0 | 0.0 | 0.0 | 0.0 | 0.0 | 0.0 | 0.0 | 0.0 |
| 113 | Storage | | 1 | 0.0 | 0.0 | 0.0 | 0.0 | 0.0 | 0.0 | 0.0 | 0.0 |
| 114 | Storage | | 1 | 0.0 | 0.0 | 0.0 | 0.0 | 0.0 | 0.0 | 0.0 | 0.0 |
| 115 | Storage | | 1 | 0.0 | 0.0 | 0.0 | 0.0 | 0.0 | 0.0 | 0.0 | 0.0 |
| 116 | Storage | | 1 | 0.0 | 0.0 | 0.0 | 0.0 | 0.0 | 0.0 | 0.0 | 0.0 |
| 117 | Storage | | 1 | 0.0 | 0.0 | 0.0 | 0.0 | 0.0 | 0.0 | 0.0 | 0.0 |
| 118 | Storage | | 1 | 0.0 | 0.0 | 0.0 | 0.0 | 0.0 | 0.0 | 0.0 | 0.0 |
| 119 | Storage | | 1 | 0.0 | 0.0 | 0.0 | 0.0 | 0.0 | 0.0 | 0.0 | 0.0 |
| 120 | Storage | | 1 | 0.0 | 0.0 | 0.0 | 0.0 | 0.0 | 0.0 | 0.0 | 0.0 |
| 121 | Storage | | 1 | 0.0 | 0.0 | 0.0 | 0.0 | 0.0 | 0.0 | 0.0 | 0.0 |
| 122 | Storage | | 1 | 0.0 | 0.0 | 0.0 | 0.0 | 0.0 | 0.0 | 0.0 | 0.0 |
| 123 | Storage | | 1 | 0.0 | 0.0 | 0.0 | 0.0 | 0.0 | 0.0 | 0.0 | 0.0 |
| 124 | Classroom | 55.0 | 6 | 4.6 | 13.8 | 22.9 | 32.1 | 41.3 | 50.4 | 59.6 | 68.8 |
| 125 | Women | | 1 | 0.0 | 0.0 | 0.0 | 0.0 | 0.0 | 0.0 | 0.0 | 0.0 |
| 126 | Sto | | 1 | 0.0 | 0.0 | 0.0 | 0.0 | 0.0 | 0.0 | 0.0 | 0.0 |
| 127 | JC | | 1 | 0.0 | 0.0 | 0.0 | 0.0 | 0.0 | 0.0 | 0.0 | 0.0 |
| 128 | Storage | | 1 | 0.0 | 0.0 | 0.0 | 0.0 | 0.0 | 0.0 | 0.0 | 0.0 |
| 129 | Storage | | 1 | 0.0 | 0.0 | 0.0 | 0.0 | 0.0 | 0.0 | 0.0 | 0.0 |
| 130 | Storage | | 1 | 0.0 | 0.0 | 0.0 | 0.0 | 0.0 | 0.0 | 0.0 | 0.0 |
| 131 | Storage | | 1 | 0.0 | 0.0 | 0.0 | 0.0 | 0.0 | 0.0 | 0.0 | 0.0 |
| 132 | Storage | | 1 | 0.0 | 0.0 | 0.0 | 0.0 | 0.0 | 0.0 | 0.0 | 0.0 |
| 133 | Storage | | 1 | 0.0 | 0.0 | 0.0 | 0.0 | 0.0 | 0.0 | 0.0 | 0.0 |
| 134 | Storage | | 1 | 0.0 | 0.0 | 0.0 | 0.0 | 0.0 | 0.0 | 0.0 | 0.0 |
| 135 | Storage | | 1 | 0.0 | 0.0 | 0.0 | 0.0 | 0.0 | 0.0 | 0.0 | 0.0 |
| 136 | Storage | | 1 | 0.0 | 0.0 | 0.0 | 0.0 | 0.0 | 0.0 | 0.0 | 0.0 |

| | | | | | | | | | | | | |
|---|---|---|---|---|---|---|---|---|---|---|---|---|
| 137 | | Storage | | 1 | 0.0 | 0.0 | 0.0 | 0.0 | 0.0 | 0.0 | 0.0 | 0.0 |
| 138 | | Storage | | 1 | 0.0 | 0.0 | 0.0 | 0.0 | 0.0 | 0.0 | 0.0 | 0.0 |
| 139 | | Office | | 1 | 0.0 | 0.0 | 0.0 | 0.0 | 0.0 | 0.0 | 0.0 | 0.0 |
| 140 | | Office | | 1 | 0.0 | 0.0 | 0.0 | 0.0 | 0.0 | 0.0 | 0.0 | 0.0 |
| 141 | | Lobby | 32.0 | 4 | 4.0 | 12.0 | 20.0 | 28.0 | 36.0 | 44.0 | 52.0 | 60.0 |
| 142 | 4136 | Recruitin | 31.5 | 6 | 2.6 | 7.9 | 13.1 | 18.4 | 23.6 | 28.9 | 34.1 | 39.4 |
| 142 | 4136 | Recruitin | 18.0 | 4 | 2.3 | 6.8 | 11.3 | 15.8 | 20.3 | 24.8 | 29.3 | 33.8 |
| 143 | 4137 | Medical | 10.0 | 2 | 2.5 | 7.5 | 12.5 | 17.5 | 22.5 | 27.5 | 32.5 | 37.5 |
| 144 | 4138 | Medical | 33.7 | 6 | 2.8 | 8.4 | 14.0 | 19.7 | 25.3 | 30.9 | 36.5 | 42.1 |
| 145 | 4139 | Break Area | | 1 | 0.0 | 0.0 | 0.0 | 0.0 | 0.0 | 0.0 | 0.0 | 0.0 |
| 146 | 4140 | Electric | | 1 | 0.0 | 0.0 | 0.0 | 0.0 | 0.0 | 0.0 | 0.0 | 0.0 |
| 147 | 4141 | Tele | | 1 | 0.0 | 0.0 | 0.0 | 0.0 | 0.0 | 0.0 | 0.0 | 0.0 |
| 148 | 4142 | Vest | | 1 | 0.0 | 0.0 | 0.0 | 0.0 | 0.0 | 0.0 | 0.0 | 0.0 |
| 149 | 4143 | Mech | | 1 | 0.0 | 0.0 | 0.0 | 0.0 | 0.0 | 0.0 | 0.0 | 0.0 |
| 150 | | Office | | 1 | 0.0 | 0.0 | 0.0 | 0.0 | 0.0 | 0.0 | 0.0 | 0.0 |
| 151 | | Office | | 1 | 0.0 | 0.0 | 0.0 | 0.0 | 0.0 | 0.0 | 0.0 | 0.0 |
| 152 | | Office | | 1 | 0.0 | 0.0 | 0.0 | 0.0 | 0.0 | 0.0 | 0.0 | 0.0 |
| 201 | | Storage | | | | | | | | | | |
| 202 | | Storage | | | | | | | | | | |
| 203 | | Storage | | | | | | | | | | |
| 204 | | Storage | | | | | | | | | | |
| 205 | | Storage | | | | | | | | | | |
| 206 | | Storage | | | | | | | | | | |
| 207 | | Storage | | | | | | | | | | |
| 208 | | Storage | | | | | | | | | | |
| 209 | | Storage | | | | | | | | | | |
| 210 | | Storage | | | | | | | | | | |
| 211 | | Storage | | | | | | | | | | |
| 212 | | Storage | | | | | | | | | | |
| 213 | | Storage | | | | | | | | | | |
| 214 | | Alcove | | 1 | 0.0 | 0.0 | 0.0 | 0.0 | 0.0 | 0.0 | 0.0 | 0.0 |
| 215 | | JC | | 1 | 0.0 | 0.0 | 0.0 | 0.0 | 0.0 | 0.0 | 0.0 | 0.0 |
| 216 | | Men | | 1 | 0.0 | 0.0 | 0.0 | 0.0 | 0.0 | 0.0 | 0.0 | 0.0 |
| 217 | | Storage | | 1 | 0.0 | 0.0 | 0.0 | 0.0 | 0.0 | 0.0 | 0.0 | 0.0 |
| 218 | | Storage | | 1 | 0.0 | 0.0 | 0.0 | 0.0 | 0.0 | 0.0 | 0.0 | 0.0 |
| 219 | | Class Roo | | 1 | 0.0 | 0.0 | 0.0 | 0.0 | 0.0 | 0.0 | 0.0 | 0.0 |
| 220 | | Class Roo | 12.0 | 2 | 3.0 | 9.0 | 15.0 | 21.0 | 27.0 | 33.0 | 39.0 | 45.0 |
| 220 | | Class Roo | 44.0 | 5 | 4.4 | 13.2 | 22.0 | 30.8 | 39.6 | | | |
| 220 | | Class Roo | 36.5 | 4 | 4.6 | 13.7 | 22.8 | 31.9 | 41.1 | 50.2 | 59.3 | 68.4 |
| 220 | | Class Roo | 28.6 | 3 | 4.8 | 14.3 | 23.8 | 33.4 | 42.9 | 52.4 | 62.0 | 71.5 |
| 221 | | Mech | | 1 | 0.0 | 0.0 | 0.0 | 0.0 | 0.0 | 0.0 | 0.0 | 0.0 |
| 222 | | Library | 15.0 | 2 | 3.8 | 11.3 | | | | | | |
| 222 | | Library | 52.3 | 6 | 4.4 | 13.1 | 21.8 | 30.5 | 39.2 | 47.9 | | |
| 223 | | Learng Ct | 10.0 | 2 | 2.5 | 7.5 | 12.5 | 17.5 | 22.5 | 27.5 | 32.5 | 37.5 |
| 223 | | Learng Ct | 41.0 | 7 | 2.9 | 8.8 | 14.6 | 20.5 | 26.4 | 32.2 | 38.1 | |
| 224 | | Library Storag | | 1 | 0.0 | 0.0 | 0.0 | 0.0 | 0.0 | 0.0 | 0.0 | 0.0 |
| 225 | | Storage | | 1 | 0.0 | 0.0 | 0.0 | 0.0 | 0.0 | 0.0 | 0.0 | 0.0 |
| 226 | | Sto | | 1 | 0.0 | 0.0 | 0.0 | 0.0 | 0.0 | 0.0 | 0.0 | 0.0 |
| 227 | | Women | | 1 | 0.0 | 0.0 | 0.0 | 0.0 | 0.0 | 0.0 | 0.0 | 0.0 |
| 228 | | JC | | 1 | 0.0 | 0.0 | 0.0 | 0.0 | 0.0 | 0.0 | 0.0 | 0.0 |

| | | | | | | | | | | | |
|---|---|---|---|---|---|---|---|---|---|---|---|
| 229 | Alcove | | 1 | 0.0 | 0.0 | 0.0 | 0.0 | 0.0 | 0.0 | 0.0 | 0.0 |
| 230 | Office | | 1 | 0.0 | 0.0 | 0.0 | 0.0 | 0.0 | 0.0 | 0.0 | 0.0 |
| 231 | Office | 65.0 | 11 | 3.0 | 8.9 | 14.8 | 20.7 | 26.6 | 32.5 | 38.4 | 44.3 |
| 232 | Office | 65.0 | 11 | 3.0 | 8.9 | 14.8 | 20.7 | 26.6 | 32.5 | 38.4 | 44.3 |
| 233 | Office | 58.0 | 10 | 2.9 | 8.7 | 14.5 | 20.3 | 26.1 | 31.9 | 37.7 | 43.5 |
| 234 | Office | 63.0 | 11 | 2.9 | 8.6 | 14.3 | 20.0 | 25.8 | 31.5 | 37.2 | 43.0 |
| 235 | Office | 68.0 | 12 | 2.8 | 8.5 | 14.2 | 19.8 | 25.5 | 31.2 | 36.8 | 42.5 |
| 236 | Office | 62.0 | 11 | 2.8 | 8.5 | 14.1 | 19.7 | 25.4 | 31.0 | 36.6 | 42.3 |
| 237 | Office | 62.0 | 11 | 2.8 | 8.5 | 14.1 | 19.7 | 25.4 | 31.0 | 36.6 | 42.3 |
| 238 | Office | 68.0 | 12 | 2.8 | 8.5 | 14.2 | 19.8 | 25.5 | 31.2 | 36.8 | 42.5 |
| 239 | Office | 63.0 | 11 | 2.9 | 8.6 | 14.3 | 20.0 | 25.8 | 31.5 | 37.2 | 43.0 |
| 240 | Office | 58.0 | 10 | 2.9 | 8.7 | 14.5 | 20.3 | 26.1 | 31.9 | 37.7 | 43.5 |
| 241 | Office | 64.0 | 11 | 2.9 | 8.7 | 14.5 | 20.4 | 26.2 | 32.0 | 37.8 | 43.6 |
| 242 | Office | 57.0 | 10 | 2.9 | 8.6 | 14.3 | 20.0 | 25.7 | 31.4 | 37.1 | 42.8 |
| 243 | Mech | | 1 | 0.0 | 0.0 | 0.0 | 0.0 | 0.0 | 0.0 | 0.0 | 0.0 |
| 244 | MailFxCpy | 71.0 | 8 | 4.4 | 13.3 | 22.2 | 31.1 | 39.9 | 48.8 | 57.7 | 66.6 |
| 245 | Office | 75.4 | 8 | 4.7 | 14.1 | 23.6 | 33.0 | 42.4 | 51.8 | 61.3 | 70.7 |
| 246 | Office | (247) | 1 | 0.0 | 0.0 | 0.0 | 0.0 | 0.0 | 0.0 | 0.0 | 0.0 |
| 247 | ClassRm | 61.6 | 7 | 4.4 | 13.2 | 22.0 | 30.8 | 39.6 | 48.4 | 57.2 | 66.0 |
| 248 | Comsec | 74.6 | 13 | 2.9 | 8.6 | 14.3 | 20.1 | 25.8 | 31.6 | 37.3 | 43.0 |
| 249 | Training | 71.0 | 8 | 4.4 | 13.3 | 22.2 | 31.1 | 39.9 | 48.8 | 57.7 | 66.6 |
| 250 | Mech | | 1 | 0.0 | 0.0 | 0.0 | 0.0 | 0.0 | 0.0 | 0.0 | 0.0 |
| 301 | Office | 44.0 | 8 | 2.8 | 8.3 | 13.8 | 19.3 | 24.8 | 30.3 | 35.8 | 41.3 |
| 302 | Office | 48.0 | 9 | 2.7 | 8.0 | 13.3 | 18.7 | 24.0 | 29.3 | 34.7 | 40.0 |
| 303 | Office | (301) | 1 | 0.0 | 0.0 | 0.0 | 0.0 | 0.0 | 0.0 | 0.0 | 0.0 |
| 304 | Office | 73.0 | 13 | 2.8 | 8.4 | 14.0 | 19.7 | 25.3 | 30.9 | 36.5 | 42.1 |
| 305 | Office | (304) | 1 | 0.0 | 0.0 | 0.0 | 0.0 | 0.0 | 0.0 | 0.0 | 0.0 |
| 306 | Office | (304) | 1 | 0.0 | 0.0 | 0.0 | 0.0 | 0.0 | 0.0 | 0.0 | 0.0 |
| 307 | Office | (304) | 1 | 0.0 | 0.0 | 0.0 | 0.0 | 0.0 | 0.0 | 0.0 | 0.0 |
| 308 | Office | (304) | 1 | 0.0 | 0.0 | 0.0 | 0.0 | 0.0 | 0.0 | 0.0 | 0.0 |
| 309 | Office | (304) | 1 | 0.0 | 0.0 | 0.0 | 0.0 | 0.0 | 0.0 | 0.0 | 0.0 |
| 310 | Office | 50.0 | 9 | 2.8 | 8.3 | 13.9 | 19.4 | 25.0 | 30.6 | 36.1 | 41.7 |
| 311 | Office | 46.0 | 8 | 2.9 | 8.6 | 14.4 | 20.1 | 25.9 | 31.6 | 37.4 | 43.1 |
| 312 | Office | 44.0 | 8 | 2.8 | 8.3 | 13.8 | 19.3 | 24.8 | 30.3 | 35.8 | 41.3 |
| 313 | Office | 58.0 | 10 | 2.9 | 8.7 | 14.5 | 20.3 | 26.1 | 31.9 | 37.7 | 43.5 |
| 314 | Alcove | | 1 | 0.0 | 0.0 | 0.0 | 0.0 | 0.0 | 0.0 | 0.0 | 0.0 |
| 315 | JC | | 1 | 0.0 | 0.0 | 0.0 | 0.0 | 0.0 | 0.0 | 0.0 | 0.0 |
| 316 | Men | | 1 | 0.0 | 0.0 | 0.0 | 0.0 | 0.0 | 0.0 | 0.0 | 0.0 |
| 317 | Sto | | 1 | 0.0 | 0.0 | 0.0 | 0.0 | 0.0 | 0.0 | 0.0 | 0.0 |
| 318 | Sto | | 1 | 0.0 | 0.0 | 0.0 | 0.0 | 0.0 | 0.0 | 0.0 | 0.0 |
| 319 | Office | 61.0 | 11 | 2.8 | 8.3 | 13.9 | 19.4 | 25.0 | 30.5 | 36.0 | 41.6 |
| 320 | Office | 59.0 | 10 | 3.0 | 8.9 | 14.8 | 20.7 | 26.6 | 32.5 | 38.4 | 44.3 |
| 321 | Sto | | 1 | 0.0 | 0.0 | 0.0 | 0.0 | 0.0 | 0.0 | 0.0 | 0.0 |
| 322 | Sto | | 1 | 0.0 | 0.0 | 0.0 | 0.0 | 0.0 | 0.0 | 0.0 | 0.0 |
| 323 | Women | | 1 | 0.0 | 0.0 | 0.0 | 0.0 | 0.0 | 0.0 | 0.0 | 0.0 |
| 324 | JC | | 1 | 0.0 | 0.0 | 0.0 | 0.0 | 0.0 | 0.0 | 0.0 | 0.0 |
| 325 | Alcove | | 1 | 0.0 | 0.0 | 0.0 | 0.0 | 0.0 | 0.0 | 0.0 | 0.0 |
| 326 | Office | 58.0 | 10 | 2.9 | 8.7 | 14.5 | 20.3 | 26.1 | 31.9 | 37.7 | 43.5 |
| 327 | Office | 47.0 | 8 | 2.9 | 8.8 | 14.7 | 20.6 | 26.4 | 32.3 | 38.2 | 44.1 |
| 328 | Office | (327) | 1 | 0.0 | 0.0 | 0.0 | 0.0 | 0.0 | 0.0 | 0.0 | 0.0 |

| | | | | | | | | | | | | |
|---|---|---|---|---|---|---|---|---|---|---|---|---|
| 329 | Office | 46.6 | 8 | 2.9 | 8.7 | 14.6 | 20.4 | 26.2 | 32.0 | 37.9 | 43.7 |
| 330 | Office | (309) | 1 | 0.0 | 0.0 | 0.0 | 0.0 | 0.0 | 0.0 | 0.0 | 0.0 |
| 331 | Office | (309) | 1 | 0.0 | 0.0 | 0.0 | 0.0 | 0.0 | 0.0 | 0.0 | 0.0 |
| 332 | Office | (309) | 1 | 0.0 | 0.0 | 0.0 | 0.0 | 0.0 | 0.0 | 0.0 | 0.0 |
| 333 | Office | (309) | 1 | 0.0 | 0.0 | 0.0 | 0.0 | 0.0 | 0.0 | 0.0 | 0.0 |
| 334 | Office | (309) | 1 | 0.0 | 0.0 | 0.0 | 0.0 | 0.0 | 0.0 | 0.0 | 0.0 |
| 335 | Office | (309) | 1 | 0.0 | 0.0 | 0.0 | 0.0 | 0.0 | 0.0 | 0.0 | 0.0 |
| 336 | Office | (301) | 1 | 0.0 | 0.0 | 0.0 | 0.0 | 0.0 | 0.0 | 0.0 | 0.0 |
| 337 | Office | (302) | 1 | 0.0 | 0.0 | 0.0 | 0.0 | 0.0 | 0.0 | 0.0 | 0.0 |
| 338 | Office | (301) | 1 | 0.0 | 0.0 | 0.0 | 0.0 | 0.0 | 0.0 | 0.0 | 0.0 |
| 339 | Office | | 1 | 0.0 | 0.0 | 0.0 | 0.0 | 0.0 | 0.0 | 0.0 | 0.0 |
| 340 | Office | 70.6 | 12 | 2.9 | 8.8 | 14.7 | 20.6 | 26.5 | 32.4 | 38.2 | 44.1 |
| 341 | Office | 75.4 | 13 | 2.9 | 8.7 | 14.5 | 20.3 | 26.1 | 31.9 | 37.7 | 43.5 |
| 342 | Office | (343) | 1 | 0.0 | 0.0 | 0.0 | 0.0 | 0.0 | 0.0 | 0.0 | 0.0 |
| 343 | Office | 62 | 11 | 2.8 | 8.5 | 14.1 | 19.7 | 25.4 | 31.0 | 36.6 | 42.3 |
| 344 | Office | 74.6 | 13 | 2.9 | 8.6 | 14.3 | 20.1 | 25.8 | 31.6 | 37.3 | 43.0 |
| 345 | Office | 70 | 12 | 2.9 | 8.8 | 14.6 | 20.4 | 26.3 | 32.1 | 37.9 | 43.8 |
| 346 | Mech | | 1 | 0.0 | 0.0 | 0.0 | 0.0 | 0.0 | 0.0 | 0.0 | 0.0 |

Lighting Tabulation

Power Density watts/SF

Lighting Fixture Style and Quantity

| Room No. | 03-Oct-94 Function | Admin Area | NonAdCalc Area | Area | S N | E-W | PwrDenStyle W/SF | A2 | A3 | B | C | D | E | F | G | H |
|---|---|---|---|---|---|---|---|---|---|---|---|---|---|---|---|---|
| Ft. Devens, Building | | | 642 | | | | | | | Lights | | | | | | |
| Room No. | 03-Oct-94 Function | Admin Area | NonAdCalc Area | Area | S | E-W | PwrDenStyle W/SF | A2 | A3 | B | C | D | E | F | G | H |
| 101 | Office | 362 | | 0 | | | 1.74 | | 6 | | | | | | | |
| 102 | Office | 356 | | 0 | | | 1.77 | | 6 | | | | | | | |
| 103 | Office | 252 | | 0 | | | 1.67 | | 4 | | | | | | | |
| 104 | Office | 226 | | 0 | | | 1.86 | | 4 | | | | | | | |
| 105 | Office | 284 | | 0 | | | 1.48 | ~~6~~ | 4 | | | | | | | |
| 106 | Office | 257 | | 0 | | | 1.63 | | 4 | | | | | | | |
| 107 | Office | 510 | | 513 | 38 | 13.5 | 1.85 | | 9 | 8 | | | | | | |
| 108 | Office | 235 | | 0 | | | 1.79 | ~~6~~ | 4 | | | | | | | |
| 109 | Office | 465 | | 458 | 24.1 | 19 | 1.81 | | 8 | | | | | | | |
| 110 | Storage | 0 | 122 | 122 | 6.5 | 18.7 | 1.15 | | | | ~~2~~ | | | | | |
| 111 | Break Rm | 404 | | 348 | 12.8 | 27.2 | 0.87 | 5 | | | | | | | | |
| 112 | JC | 0 | | 0 | | | ERR | | | | | | | | | |
| 113 | Men | 0 | | 0 | | | ERR | | | | | 4 | | | 1 | |
| 114 | Conference | 2385 | | 2280 | 40 | 57 | 2.21 | | | | | 43 | 25 | | | |
| 115 | Vest | 0 | | 0 | | | ERR | 1 | | | | | | | | |
| 116 | RrProjSto | 317 | | 314 | 8 | 39.3 | 0.99 | | ~~14~~ | | | | | | | |
| 117 | PhyFitness | 1688 | | 1691 | 38 | 44.5 | 0.83 | 17 | | | | ~~3~~ | 2 | | | |
| 118 | Wash | 0 | | 0 | | | ERR | | | | | 2 | | | | |
| 119 | Vest | 0 | | 0 | | | ERR | | | | | | | 1 | | |
| 120 | SupSgt | 398 | | 461 | 38.4 | 12 | 1.58 | | 10 | | ~~4~~ | | | | | |
| 121 | Office | 255 | | 253 | 13.3 | 19 | 1.65 | 6 | | | | | | | | |
| 122 | Women | 0 | | 0 | | | ERR | | | | | 4 | | | 1 | |
| 123 | Sto | 0 | | 0 | | | ERR | | | | 3 | | | | | |
| 124 | JC | 0 | | 0 | | | ERR | | | | | | | | | |
| 125 | Office | 148 | | 144 | 16 | 9 | 2.13 | | 3 | | | | | | | |
| 126 | Office | 106 | | 108 | 12 | 9 | 1.98 | | 2 | | | | | | | |
| 127 | Foyer | 0 | 67 | 67 | 9 | 7.4 | 1.04 | 1 | | | | | | | | |
| 128 | Interview | 101 | | 101 | 9 | 11.2 | 2.08 | | 2 | | | | | | | |
| 128 | Interview | | | | | | | | | | | | | | | |
| 129 | Office | 353 | | 353 | 18.6 | 19 | 1.78 | | 6 | | | | | | | |
| 130 | Office | 235 | | 234 | 12.3 | 19 | 1.79 | | 4 | | | | | | | |
| 131 | Office | 168 | | 169 | 12.5 | 13.5 | 1.67 | 4 | | | | | | | | |
| 132 | Office | 168 | | 0 | | 13.5 | 1.67 | 4 | | | | | | | | |
| 133 | Office | 169 | | 0 | | 13.5 | 1.66 | 4 | | | | | | | | |
| 134 | Office | 257 | | 0 | | 13.5 | 1.63 | | 4 | | | | | | | |
| 135 | Office | 257 | | 0 | | 13.5 | 1.63 | | 4 | | | | | | | |
| 136 | Office | 257 | | 0 | | 13.5 | 1.63 | | 4 | | | | | | | |
| 137 | Office | 252 | | 257 | 19 | 13.5 | 1.67 | | 4 | | | | | | | |
| 138 | Office | 721 | | 722 | 38 | 19 | 1.46 | | 10 | | | | | | | |
| 139 | Mech | 0 | | 0 | | | ERR | | | | | | | | | |
| 140 | Vest | 0 | | 0 | | | ERR | | | | | 1 | | 1 | | |
| 141 | Mail | 172 | | 0 | | | 1.63 | | 2 | | ~~1~~ | 2 | | | | |
| 142 | Office | 257 | | 253 | 13.3 | 19 | 1.63 | 6 | | | | | | | | |
| 143 | Office | 760 | | 0 | | | 1.66 | 18 | | | | | | | | |
| 143 | | | | 0 | | | ERR | | | | | | | | | |
| 144 | Electric | 0 | 173 | 176 | 13.5 | 13 | 1.62 | | | | 4 | | | | | |
| 145 | Telephone | 0 | 69 | 0 | | | 2.03 | | | | 2 | | | | | |
| 146 | Vest | 0 | | 0 | | | ERR | | | | | | | 1 | | |
| 147 | Mech | 0 | | 0 | | | ERR | | | | | | | | | |
| 201 | Office | 164 | | 0 | | | 1.92 | | 3 | | | | | | | |
| 201 | | | | 0 | | | ERR | | | | | | | | | |
| 202 | Office | 166 | | 0 | | | 1.90 | | 3 | | | | | | | |
| 203 | Office | 164 | | 0 | | | 1.92 | | 3 | | | | | | | |
| 204 | Office | 352 | | 0 | | | 1.79 | | 6 | | | | | | | |
| 205 | Office | 358 | | 0 | | | 1.76 | | 6 | | | | | | | |
| 206 | Office | 358 | | 0 | | | 1.76 | | 6 | | | | | | | |
| 207 | Office | 358 | | 0 | | | 1.76 | | 6 | | | | | | | |
| 208 | Office | 358 | | 0 | | | 1.76 | | 6 | | | | | | | |
| 209 | Office | 352 | | 0 | | | 1.79 | | 6 | | | | | | | |
| 210 | Office | 169 | | 0 | | | 1.86 | | 3 | | | | | | | |
| 211 | Office | 173 | | 0 | | | 1.82 | | 3 | | | | | | | |
| 212 | Office | 173 | | 0 | | | 1.82 | | 3 | | | | | | | |
| 213 | Office | 247 | | 0 | | | 1.70 | | 4 | | | | | | | |
| 214 | Alcove | 0 | | 0 | | | ERR | | | | | | | | | |
| 215 | JC | 0 | | 0 | | | ERR | | | | | | | | | |

| Room No. | 03-Oct-94 Function | Admin Area | NonAdCalc Area | Area | S | E-W | PwrDenStyle W/SF | A2 | A3 | B | C | D | E | F | G | H |
|---|---|---|---|---|---|---|---|---|---|---|---|---|---|---|---|---|
| 216 | Men | 0 | | 0 | | | ERR | | | | | | | | | |
| 217 | Sto | 0 | | 0 | | | ERR | | | | | | | | | |
| 218 | Office | 125 | | 0 | | | 1.68 | | 2 | | | | | | | |
| 219 | Office | 987 | | 0 | | | 1.81 | | 17 | | | | | | | |
| 220 | Mech | 0 | | 0 | | | ERR | | | | | | | | | |
| 221 | Office | 987 | | 0 | | | 1.81 | | 17 | | | | | | | |
| 222 | Office | 125 | | 0 | | | 1.68 | | 2 | | | | | | | |
| 223 | Sto | 0 | | 0 | | | ERR | | | | | | | | | |
| 224 | Women | 0 | | 0 | | | ERR | | | | | | | | | |
| 225 | JC | 0 | | 0 | | | ERR | | | | | | | | | |
| 226 | Alcove | 0 | | 0 | | | ERR | | | | | | | | | |
| 227 | Office | 207 | | 0 | | | 2.03 | | 4 | | | | | | | |
| 228 | Office | 232 | | 0 | | | 1.51 | 5 | | | | | | | | |
| 229 | Bath | 0 | | 0 | | | ERR | | | | | | | | | |
| 230 | Bath | 0 | | 0 | | | ERR | | | | | | | | | |
| 231 | Office | 229 | | 0 | | | 1.53 | 5 | | | | | | | | |
| 232 | Office | 235 | | 237 | 12.6 | 18.8 | 1.79 | 6 | | | | | | | | |
| 233 | Bath | 0 | | 0 | | | ERR | | | | | | | | | |
| 234 | Office | 218 | | 0 | | | 1.61 | 4 | | | | 1 | | | | |
| 235 | Office | 236 | | 0 | | | 1.78 | 5 | | | | 1 | | | | |
| 236 | Bath | 0 | | 0 | | | ERR | | | | | | | | | |
| 237 | Bath | 0 | | 0 | | | ERR | | | | | | | | | |
| 238 | Office | 218 | | 0 | | | 1.61 | 4 | | | | 1 | | | | |
| 239 | Office | 218 | | 0 | | | 1.61 | 4 | | | | 1 | | | | |
| 240 | Bath | 0 | | 0 | | | ERR | | | | | | | | | |
| 241 | Bath | 0 | | 0 | | | ERR | | | | | | | | | |
| 242 | Office | 236 | | 0 | | | 1.78 | 5 | | | | 1 | | | | |
| 243 | Office | 218 | | 0 | | | 1.61 | 4 | | | | 1 | | | | |
| 244 | Bath | 0 | | 0 | | | ERR | | | | | | | | | |
| 245 | Office | 235 | | 0 | | | 1.79 | 6 | | | | | | | | |
| 246 | Office | 227 | | 0 | | | 1.85 | 6 | | | | | | | | |
| 247 | Bath | 0 | | 0 | | | ERR | | | | | | | | | |
| 248 | Bath | 0 | | 0 | | | ERR | | | | | | | | | |
| 249 | Office | 175 | | 0 | | | 2.00 | 4 | | | | 1 | | | | |
| 250 | Mech | | | 0 | | | ERR | | | | | | | | | |
| 251 | Office | 293 | | 0 | | | 1.67 | 7 | | | | | | | | |
| 252 | Office | 297 | | 0 | | | 1.65 | 7 | | | | | | | | |
| 253 | Office | 266 | | 0 | | | 1.58 | 6 | | | | | | | | |
| 254 | Office | 266 | | 0 | | | 1.58 | 6 | | | | | | | | |
| 255 | Office | 343 | | 0 | | | 1.63 | 8 | | | | | | | | |
| 256 | Office | 317 | | 0 | | | 1.77 | 8 | | | | | | | | |
| 257 | Mech | 0 | | 0 | | | ERR | | | | | | | | | |
| 301 | Office | 164 | | 0 | | | | | 3 | | | | | | | |
| 302 | Office | 166 | | 0 | | | 1.90 | | 3 | | | | | | | |
| 303 | Office | 164 | | 0 | | | 1.92 | | 3 | | | | | | | |
| 304 | Office | 352 | | 0 | | | 1.79 | | 6 | | | | | | | |
| 305 | Office | 358 | | 0 | | | 1.76 | | 6 | | | | | | | |
| 306 | Office | 358 | | 0 | | | 1.76 | | 6 | | | | | | | |
| 307 | Office | 358 | | 0 | | | 1.76 | | 6 | | | | | | | |
| 308 | Office | 358 | | 0 | | | 1.76 | | 6 | | | | | | | |
| 309 | Office | 352 | | 0 | | | 1.79 | | 6 | | | | | | | |
| 310 | Office | 169 | | 0 | | | 1.86 | | 3 | | | | | | | |
| 311 | Office | 173 | | 0 | | | 1.82 | | 3 | | | | | | | |
| 312 | Office | 173 | | 0 | | | 1.82 | | 3 | | | | | | | |
| 313 | Office | 173 | | 0 | | | 1.82 | | 3 | | | | | | | |
| 314 | Sto | 0 | | 0 | | | ERR | | | | | | | | | |
| 315 | Alcove | 0 | | 0 | | | ERR | | | | | | | | | |
| 316 | JC | 0 | | 0 | | | ERR | | | | | | | | | |
| 317 | Men | 0 | | 0 | | | ERR | | | | | | | | | |
| 318 | Sto | 0 | | 0 | | | ERR | | | | | | | | | |
| 319 | Sto | 0 | | 0 | | | ERR | | | | | | | | | |
| 320 | Office | 266 | | 0 | | | 1.58 | 6 | | | | | | | | |
| 321 | Office | 266 | | 0 | | | 1.58 | 6 | | | | | | | | |
| 322 | Office | 125 | | 0 | | | 1.68 | | 2 | | | | | | | |
| 323 | Sto | 0 | | 0 | | | ERR | | | | | | | | | |
| 324 | Men | 0 | | 0 | | | ERR | | | | | | | | | |
| 325 | JC | 0 | | 0 | | | ERR | | | | | | | | | |
| 326 | Alcove | 0 | | 0 | | | ERR | | | | | | | | | |

| Room No. | 03-Oct-94 Function | Admin Area | NonAdCalc Area | Area | S | E-W | PwrDenStyle W/SF | A2 | A3 | B | C | D | E | F | G | H |
|---|---|---|---|---|---|---|---|---|---|---|---|---|---|---|---|---|
| 327 | Office | 240 | | 0 | | | 1.75 | | 4 | | | | | | | |
| 328 | Office | 173 | | 0 | | | 1.82 | | 3 | | | | | | | |
| 329 | Office | 345 | | 0 | | | 1.83 | | 6 | | | | | | | |
| 330 | Office | 352 | | 0 | | | 1.79 | | 6 | | | | | | | |
| 331 | Office | 358 | | 0 | | | 1.76 | | 6 | | | | | | | |
| 332 | Office | 358 | | 0 | | | 1.76 | | 6 | | | | | | | |
| 333 | Office | 358 | | 0 | | | 1.76 | | 6 | | | | | | | |
| 334 | Office | 358 | | 0 | | | 1.76 | | 6 | | | | | | | |
| 335 | Office | 352 | | 0 | | | 1.79 | | 6 | | | | | | | |
| 336 | Office | 164 | | 0 | | | 1.92 | | 3 | | | | | | | |
| 337 | Office | 166 | | 0 | | | 1.90 | | 3 | | | | | | | |
| 338 | Office | 164 | | 0 | | | 1.92 | | 3 | | | | | | | |
| 339 | Office | 197 | | 0 | | | 1.78 | 5 | | | | | | | | |
| 340 | Office | 293 | | 0 | | | 1.67 | 7 | | | | | | | | |
| 341 | Office | 297 | | 0 | | | 1.65 | 7 | | | | | | | | |
| 342 | Office | 266 | | 0 | | | 1.58 | 6 | | | | | | | | |
| 343 | Office | 266 | | 0 | | | 1.58 | 6 | | | | | | | | |
| 344 | Office | 343 | | 0 | | | 1.84 | | 6 | | | | | | | |
| 345 | Office | 317 | | 0 | | | 1.77 | 8 | | | | | | | | |
| 346 | Mech | 0 | | 0 | | | ERR | | | | | | | | | |
| C11 | SW | | | | | | | | | | | | | | | |
| C12 | NW | | | | | | | | | | | | | | | |
| C13 | W | | | | | | | | | | | | | | | |
| C14 | vest146 | | | | | | | | | | | | | | | |
| C15 | men's, W | | | | | | | | | | | | | | | |
| C16 | mid | | | | | | | | | | | | | | | |
| C17 | wmen's,E | | | | | | | | | | | | | | | |
| C18 | vest140 | | | | | | | | | | | | | | | |
| C20 | SE | | | | | | | | | | | | | | | |
| C21 | NE | | | | | | | | | | | | | | | |
| S11 | vest146,W | | | | | | | | | | | | | | | |
| S12 | vest140,E | | | | | | | | | | | | | | | |
| S13 | SW | | | | | | | | | | | | | | | |
| S14 | NW | | | | | | | | | | | | | | | |
| S15 | NE | | | | | | | | | | | | | | | |
| S16 | SE | | | | | | | | | | | | | | | |
| S17 | | | | | | | | | | | | | | | | |
| S18 | | | | | | | | | | | | | | | | |
| 346 | Mech | 0 | | 0 | | | ERR | | | | | | | | | |
| | TOTAL | 32399 | | | | | | 229 | 312 | 0 | 21 | 63 | 25 | 3 | 2 | 0 |

Ft. Devens, Building 644 N Lights

| Room No. | 03-Oct-94 Function | Admin Area | NonAdCalc Area | Area | S | E-W | PwrDenStyle W/SF | A2 | A3 | B | C | D | E | F | G | H |
|---|---|---|---|---|---|---|---|---|---|---|---|---|---|---|---|---|
| 101 | Storage | 0 | 362 | 361 | 19 | 19 | 0.77 | | | | 4 | | | | | |
| 102 | Storage | 0 | 356 | 0 | | | 0.79 | | | | 4 | | | | | |
| 103 | Storage | 0 | 252 | 257 | 19 | 13.5 | 0.83 | | | | 3 | | | | | |
| 104 | Storage | 0 | 257 | 0 | | | 0.82 | | | | 3 | | | | | |
| 105 | Storage | 0 | 257 | 0 | | | 0.82 | | | | 3 | | | | | |
| 106 | Storage | 0 | 257 | 0 | | | 0.82 | | | | 3 | | | | | |
| 107 | Storage | 0 | 257 | 0 | | | 0.82 | | | | 3 | | | | | |
| 108 | Storage | 0 | 252 | 0 | | | 0.83 | | | | 3 | | | | | |
| 109 | Receiving | 0 | 235 | 234 | 12.3 | 19 | 1.19 | | | | 4 | | | | | |
| 110 | Staging | 0 | 465 | 456 | 24 | 19 | 0.90 | | | | 6 | | | | | |
| 111 | Vest | 0 | | 0 | | | ERR | | | | | 2 | | | | |
| 112 | | 0 | | 0 | | | ERR | | | 1 | | | | | | |
| 113 | Vault | 0 | | 0 | | | ERR | | | 1 | | | | | | |
| 114 | Vault | 0 | | 0 | | | ERR | | | 1 | | | | | | |
| 115 | Storage | 0 | 144 | 0 | | | 0.97 | | | | 2 | | | | | |
| 116 | JC | 0 | | 0 | | | | | | | | | | 0 | | |
| 117 | Men | 0 | | 0 | | | ERR | | | | | 4 | | | 1 | |
| 118 | Storage | 0 | 750 | 750 | 30 | 25 | 0.56 | | | | 6 | | | | | |
| 119 | AsmblyHll | 0 | | 3249 | 57 | 57 | ERR | | | 19 | | | | | | |
| 120 | Wash | 0 | | 0 | | | ERR | | | 1 | | | | | | |
| 121 | Vest | 0 | | 0 | | | ERR | | | | | 1 | | | | |

| Room No. | 03-Oct-94 Function | Admin Area | NonAdCalc Area | Area | S | E-W | PwrDenStyle W/SF | A2 | A3 | B | C | D | E | F | G | H |
|---|---|---|---|---|---|---|---|---|---|---|---|---|---|---|---|---|
| 122 | Storage | 0 | | 0 | | | ERR | | | | 6 | | | | | |
| 123 | Corridor | 0 | | 0 | | | ERR | | | | | 8 | | | | |
| 124 | Classroom | 0 | | 0 | | | ERR | 6 | | | | | | | | |
| 125 | Women | 0 | | 0 | | | ERR | | | | | 4 | | | 1 | |
| 126 | Sto | 0 | | 0 | | | ERR | | | | 2 | | | | | |
| 127 | JC | 0 | | 0 | | | ERR | | | | | | | 0 | | |
| 128 | Vault | 0 | | 0 | | | ERR | | | 1 | | | | | | |
| 129 | Vault | 0 | | 0 | | | ERR | | | 1 | | | | | | |
| 130 | | 0 | | 0 | | | ERR | | | 1 | | | | | | |
| 131 | Vest | 0 | | 0 | | | ERR | | | | | 2 | | | | |
| 132 | PhysFtnes | 700 | | 703 | 37 | 19 | 0.80 | 8 | | | | | | | | |
| 133 | PhysFtnes | 766 | | 783 | 58 | 13.5 | 0.91 | 10 | | | | | | | | |
| 134 | Storage | 0 | 257 | 0 | | | 0.82 | | | | 3 | | | | | |
| 135 | Storage | 0 | 257 | 0 | | | 0.82 | | | | 3 | | | | | |
| 136 | Storage | 0 | 252 | 0 | | | 0.83 | | | | 3 | | | | | |
| 137 | Storage | 0 | 356 | 0 | | | 0.79 | | | | 4 | | | | | |
| 138 | Storage | 0 | 362 | 0 | | | 0.77 | | | | 4 | | | | | |
| 139 | Mech | 0 | | 0 | | | ERR | | | | | | | 0 | | |
| 140 | Vest | 0 | | 0 | | | ERR | | | | | | | 1 | | |
| 141 | Lobby | 256 | | 0 | | | 1.37 | 2 | | | | 3 | | | | |
| 142 | Recruiting | 257 | | 0 | | | 1.63 | | 4 | | | | | | | |
| 143 | Medical | 257 | | 0 | | | 1.63 | | 4 | | | | | | | |
| 144 | Medical | 257 | | 0 | | | 1.63 | | 4 | | | | | | | |
| 145 | Break Area | 0 | | 0 | | | ERR | 3 | | | | | | | | |
| 146 | Electric | 0 | | 0 | | | ERR | | | | 2 | | | | | |
| 147 | Tele | 0 | | 0 | | | ERR | | | | 1 | | | | | |
| 148 | Vest | 0 | | 0 | | | ERR | | | | | | | 1 | | |
| 149 | Mech | 0 | | 0 | | | ERR | | | | | | | 0 | | |
| 201 | Storage | 0 | | 0 | | | ERR | | | | 2 | | | | | |
| 202 | Storage | 0 | | 0 | | | ERR | | | | 2 | | | | | |
| 203 | Storage | 0 | | 0 | | | ERR | | | | 2 | | | | | |
| 204 | Storage | 0 | | 0 | | | ERR | | | | 4 | | | | | |
| 205 | Storage | 0 | | 0 | | | ERR | | | | 4 | | | | | |
| 206 | Storage | 0 | | 0 | | | ERR | | | | 4 | | | | | |
| 207 | Storage | 0 | | 0 | | | ERR | | | | 4 | | | | | |
| 208 | Storage | 0 | | 0 | | | ERR | | | | 4 | | | | | |
| 209 | Storage | 0 | | 0 | | | ERR | | | | 4 | | | | | |
| 210 | Storage | 0 | | 0 | | | ERR | | | | 2 | | | | | |
| 211 | Storage | 0 | | 0 | | | ERR | | | | 2 | | | | | |
| 212 | Storage | 0 | | 0 | | | ERR | | | | 2 | | | | | |
| 213 | Storage | 0 | | 0 | | | ERR | | | | 3 | | | | | |
| 214 | Alcove | 0 | | 0 | | | ERR | | | | | 2 | | | | |
| 215 | JC | 0 | | 0 | | | ERR | | | | | | | 0 | | |
| 216 | Men | 0 | | 0 | | | ERR | | | | | 5 | | | 3 | |
| 217 | Storage | 0 | | 0 | | | ERR | | | | 0 | | | | | |
| 218 | Storage | 0 | | 0 | | | ERR | | | | 1 | | | | | |
| 219 | Class Room | 484 | | 481 | 26 | 18.5 | 1.45 | 10 | | | | | | | | |
| 220 | Class Room | 493 | | 0 | | 18.5 | 1.42 | 10 | | | | | | | | |
| 220 | Class Room | 0 | | 0 | | | ERR | | | | | | | | | |
| 220 | Class Room | 0 | | 0 | | | ERR | | | | | | | | | |
| 220 | Class Room | 0 | | 0 | | | ERR | | | | | | | | | |
| 221 | Mech | 0 | | 0 | | | ERR | | | | | | | ? | | |
| 222 | Library | 350 | | 351 | 26 | 13.5 | 1.20 | 6 | | | | | | | | |
| 222 | Library | 0 | | 0 | | | ERR | | | | | | | | | |
| 223 | Learng Ctr | 242 | | 0 | | | 1.16 | 4 | | | | | | | | |
| 223 | Learng Ctr | 0 | | 0 | | | ERR | | | | | | | | | |
| 224 | Library Storage | | | 0 | | | ERR | | | | 1 | | | | | |
| 225 | Storage | 0 | | 0 | | | ERR | | | | 1 | | | | | |
| 226 | Sto | 0 | | 0 | | | ERR | | | | 0 | | | | | |
| 227 | Women | 0 | | 0 | | | ERR | | | | | 5 | | | 3 | |
| 228 | JC | 0 | | 0 | | | ERR | | | | | | | | | |
| 229 | Alcove | 0 | | 0 | | | ERR | | | | | | | | | |
| 230 | Office | 207 | | 0 | | | 2.03 | | 4 | | | | | | | |
| 231 | Office | 274 | | 0 | | | 1.53 | 6 | | | | | | | | |
| 232 | Office | 269 | | 0 | | | 1.56 | 6 | | | | | | | | |
| 233 | Office | 235 | | 0 | | | 1.79 | 6 | | | | | | | | |
| 234 | Office | 258 | | 0 | | | 1.63 | | 4 | | | | | | | |
| 235 | Office | 275 | | 0 | | | 1.53 | | 4 | | | | | | | |

| Room No. | 03-Oct-94 Function | Admin Area | NonAdCalc Area | Area | S | E-W | PwrDenStyle W/SF | A2 | A3 | B | C | D | E | F | G | H |
|---|---|---|---|---|---|---|---|---|---|---|---|---|---|---|---|---|
| 236 | Office | 258 | 0 | | | | 1.63 | | 4 | | | | | | | |
| 237 | Office | 257 | 0 | | | | 1.63 | | 4 | | | | | | | |
| 238 | Office | 275 | 0 | | | | 1.53 | | 4 | | | | | | | |
| 239 | Office | 258 | 0 | | | | 1.63 | | 4 | | | | | | | |
| 240 | Office | 235 | 0 | | | | 1.79 | 6 | | | | | | | | |
| 241 | Office | 267 | 0 | | | | 1.57 | | 4 | | | | | | | |
| 242 | Office | 215 | 223 | | 16.5 | 13.5 | 1.95 | | 4 | | | | | | | |
| 243 | Mech | 0 | 0 | | | | ERR | | | | | | | | | |
| 244 | CpyFaxMail | 244 | 317 | | 13.5 | 23.5 | 1.72 | | 4 | | | | | | | |
| 245 | ClassRm | 343 | 0 | | | | 1.84 | | 6 | | | | | | | |
| 246 | ClassRm | 266 | 0 | | | | 1.58 | | 4 | | | | | | | |
| 247 | ClassRm | 266 | 0 | | | | 1.58 | | 4 | | | | | | | |
| 248 | Comsec | 343 | 0 | | | | 1.84 | | 6 | | | | | | | |
| 249 | Training | 317 | 317 | | 13.5 | 23.5 | 1.99 | | 6 | | | | | | | |
| 250 | Mech | 0 | 0 | | | | ERR | | | | | | | | | |
| 301 | Office | 164 | 0 | | | | 1.92 | | 3 | | | | | | | |
| 302 | Office | 166 | 0 | | | | 1.90 | | 3 | | | | | | | |
| 303 | Office | 164 | 0 | | | | 1.92 | | 3 | | | | | | | |
| 304 | Office | 352 | 0 | | | | 1.49 | | 5 | | | | | | | |
| 305 | Office | 358 | 0 | | | | 1.47 | | 5 | | | | | | | |
| 306 | Office | 358 | 0 | | | | 1.47 | | 5 | | | | | | | |
| 307 | Office | 358 | 0 | | | | 1.47 | | 5 | | | | | | | |
| 308 | Office | 358 | 0 | | | | 1.47 | | 5 | | | | | | | |
| 309 | Office | 352 | 0 | | | | 1.49 | | 5 | | | | | | | |
| 310 | Office | 169 | 0 | | | | 1.86 | | 3 | | | | | | | |
| 311 | Office | 173 | 0 | | | | 1.82 | | 3 | | | | | | | |
| 312 | Office | 173 | 0 | | | | 1.82 | | 3 | | | | | | | |
| 313 | Office | 238 | 0 | | | | 1.76 | | 4 | | | | | | | |
| 314 | Alcove | 0 | 0 | | | | ERR | | | | | 1 | | | | |
| 315 | JC | 0 | 0 | | | | ERR | | | | | | | | | |
| 316 | Men | 0 | 0 | | | | ERR | | | | | 5 | | | 3 | |
| 317 | Sto | 0 | 0 | | | | ERR | | | | | | | | | |
| 318 | Sto | 0 | 0 | | | | ERR | | | | 1 | | | | | |
| 319 | Office | 266 | 0 | | | | 1.58 | 6 | | | | | | | | |
| 320 | Office | 266 | 0 | | | | 1.58 | 6 | | | | | | | | |
| 321 | Sto | 0 | 0 | | | | ERR | | | | 1 | | | | | |
| 322 | Sto | 0 | 0 | | | | ERR | | | | | | | | | |
| 323 | Women | 0 | 0 | | | | ERR | | | | | 5 | | | 3 | |
| 324 | JC | 0 | 0 | | | | ERR | | | | | | | | | |
| 325 | Alcove | 0 | 0 | | | | ERR | | | | | 1 | | | | |
| 326 | Office | 238 | 0 | | | | 1.76 | | 4 | | | | | | | |
| 327 | Office | 173 | 0 | | | | 1.82 | | 3 | | | | | | | |
| 328 | Office | 173 | 0 | | | | 1.82 | | 3 | | | | | | | |
| 329 | Office | 169 | 0 | | | | 1.86 | | 3 | | | | | | | |
| 330 | Office | 352 | 0 | | | | 1.49 | | 5 | | | | | | | |
| 331 | Office | 358 | 0 | | | | 1.47 | | 5 | | | | | | | |
| 332 | Office | 358 | 0 | | | | 1.47 | | 5 | | | | | | | |
| 333 | Office | 358 | 0 | | | | 1.47 | | 5 | | | | | | | |
| 334 | Office | 358 | 0 | | | | 1.47 | | 5 | | | | | | | |
| 335 | Office | 352 | 0 | | | | 1.49 | | 5 | | | | | | | |
| 336 | Office | 164 | 0 | | | | 1.92 | | 3 | | | | | | | |
| 337 | Office | 166 | 0 | | | | 1.90 | | 3 | | | | | | | |
| 338 | Office | 164 | 0 | | | | 1.92 | | 3 | | | | | | | |
| 339 | Mech | 0 | 0 | | | | ERR | | | | | | | | | |
| 340 | Office | 313 | 0 | | | | 2.01 | | 6 | | | | | | | |
| 341 | Office | 342 | 0 | | | | 1.84 | | 6 | | | | | | | |
| 342 | Office | 252 | 0 | | | | 1.67 | | 4 | | | | | | | |
| 343 | Office | 252 | 0 | | | | 1.67 | | 4 | | | | | | | |
| 344 | Office | 343 | 0 | | | | 1.84 | | 6 | | | | | | | |
| 345 | Office | 317 | 0 | | | | 1.99 | | 6 | | | | | | | |
| 346 | Mech | 0 | 0 | | | | ERR | | | | | | | | | |
| | TOTAL | 18241 | | | | | | 95 | 214 | 26 | 116 | 48 | 0 | 2 | 14 | 0 |

FIXTURE STYLES

"Type" and "sheet" refers to Std. Det. (Standard Detail) No. 40-06-04. "IES No." refers to Fig. 9-62 of IES Lighting Handbook 1984 Reference Volume.

"A2", **Recessed, 2 lamp**, for use in suspended ceilings shall be Type 206A1 (sheet 20) and IES No. 43.

"A3", **Recessed, 3 lamp**, Type 206B1 (sheet 20).

"B", **Wrap Around**, for use in areas without suspended ceilings, non-storage areas shall be IES No. 35. There is no comparable fixture in the Standard Detail. Dimensional and performance requirements will be specified around the Holophane "Prismawrap" with some description from Type 218 (sheet 30).

"C", **Strip**, for use in storage areas shall be Type 220B (sheet 31. Lack of reflectors will provide the widest dispersion of the light, which is required because of the wide spacing of the fixtures. Refer to IES No. 48 for photometric information.

"D", **Edge/Corridor**, for use in corridors shall be Type 225 (sheet 33)be a 45 degree angled wall mounted fixture. These fixtures will be placed at the edge in the corner of the wall and ceiling. This fixture will also be used in other rooms where recessed fixtures can't be placed. and in the latrines.

"E", **2x2 Parabolic**, for use in the conference room in Bldg 642 (Rm. 114) shall be similar to a Type 240A (sheet 41) with 2 biax lamps similar to the Metalux 2P3GAX-3BX40S331.