US ARMY CORPS
OF ENGINEERS
NEW ENGLAND DIVISION

VOLUME II

ROUTINE INSPECTION FIELD NOTES

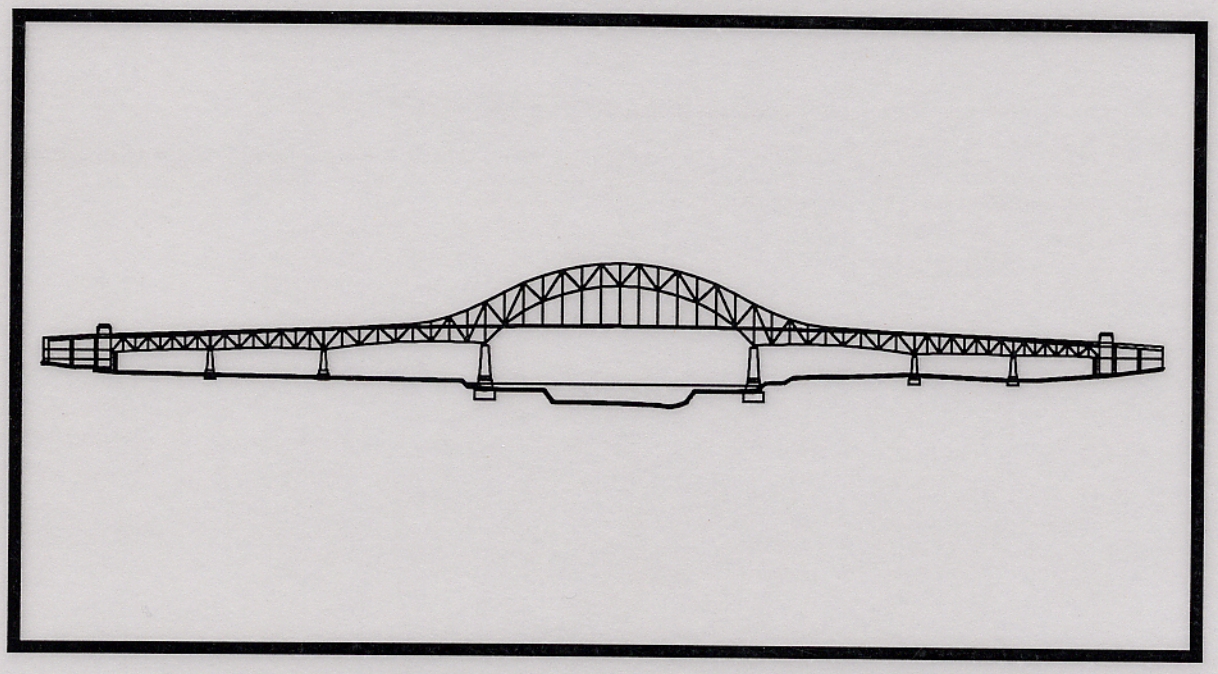

BOURNE HIGHWAY BRIDGE OVER THE CAPE COD CANAL - BOURNE, MA

JUNE 1996

NEW ENGLAND DIVISION

Lichtenstein

NEW YORK NEW JERSEY PENNSYLVANIA MASSACHUSETTS OHIO CONNECTICUT FLORIDA

BRIDGES HIGHWAYS RAILWAYS HISTORIC STRUCTURES DAMS

US ARMY CORPS
OF ENGINEERS
NEW ENGLAND DIVISION

VOLUME II

ROUTINE INSPECTION FIELD NOTES

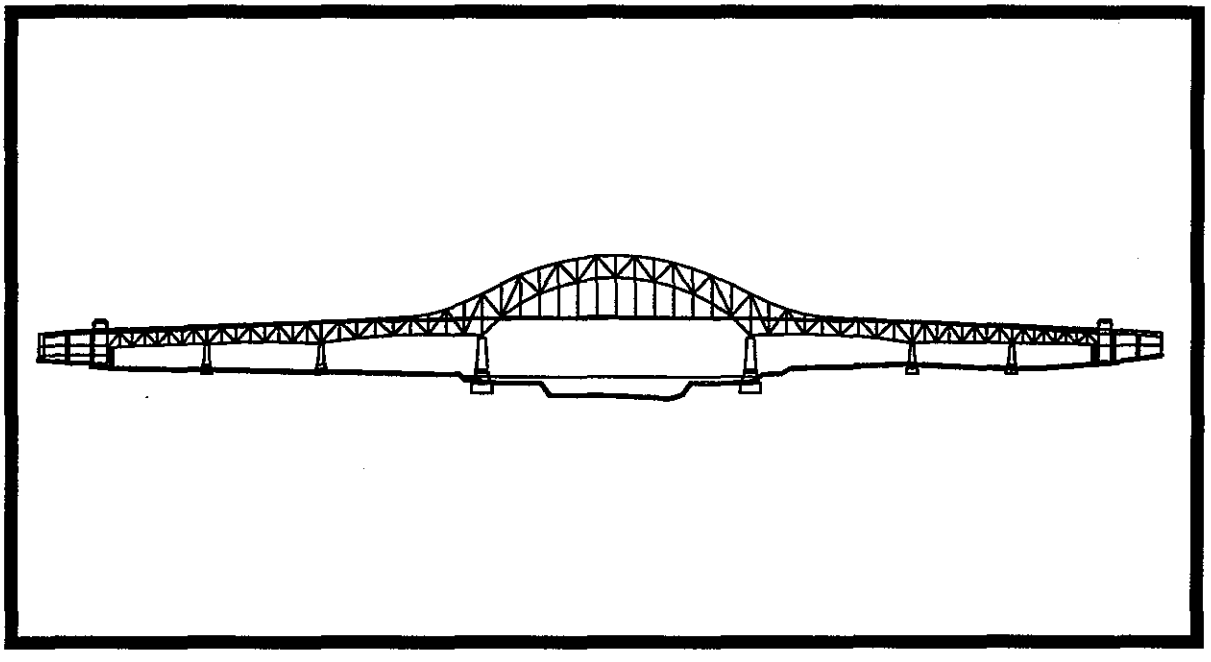

BOURNE HIGHWAY BRIDGE OVER THE CAPE COD CANAL - BOURNE, MA

JUNE 1996 **NEW ENGLAND DIVISION**

VOLUME II

TABLE OF CONTENTS

GENERAL PLAN & ELEVATION i
ABBREVIATIONS & LEGEND ii

I. MAIN TRUSS MEMBERS
- Span 7 1
- Span 5 5
- Span 3 10
- Span 1 16
- Span 2 29
- Span 4 35
- Span 6 42

II. FLOOR SYSTEM
- Span 7 58
- Span 5 63
- Span 3 67
- Span 1 71
- Span 2 83
- Span 4 100
- Span 6 106

III. BEARINGS 119

IV. SUBSTRUCTURE
- South Abutment 143
- Piers 5, 3, 1, 2, 4 & 6 164
- North Abutment 183

V. TOP OF DECK 206

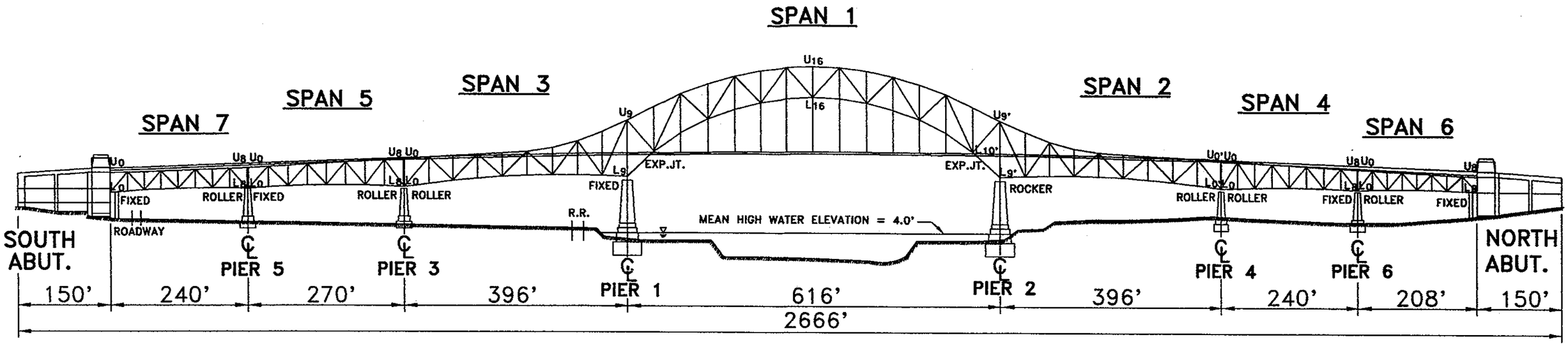

EAST ELEVATION

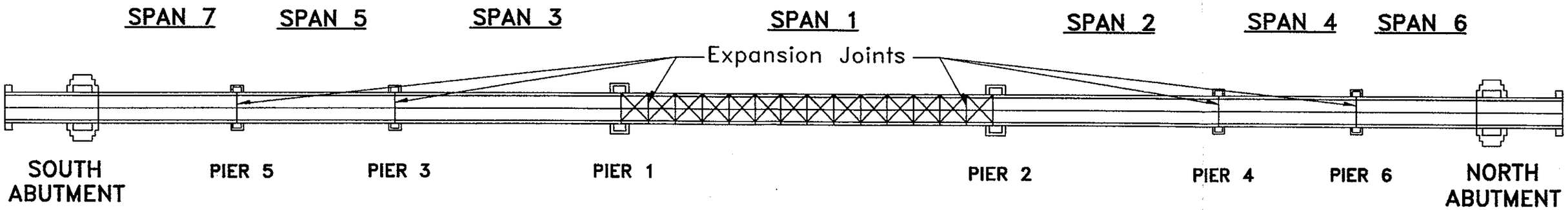

PLAN

NOTE: SPAN AND PIER NUMBERING PRESENTED ARE FROM ORIGINAL DESIGN PLANS DATED 1933.

DEPARTMENT OF THE ARMY
NEW ENGLAND DIVISION CORPS OF ENGINEERS

BOURNE HIGHWAY BRIDGE
ROUTINE INSPECTION

Lichtenstein
A.G. LICHTENSTEIN & ASSOCIATES, INC.
CONSULTING ENGINEERS

GENERAL PLAN & ELEVATION

FILE: BELEV24.dwg

SCALE: N.T.S.

DATE: 5/96

i

ABBREVIATIONS:

ORIENTATION		MEMBER TYPE		CONDITION	
BOT	BOTTOM	ABUT	ABUTMENT	AD	ABRASION DUST
BTWN	BETWEEN	∠	ANGLE	BR	BROKEN
℄	CENTER LINE	[	CHANNEL	CR	CRACK
E	EAST	CONC	CONCRETE	ø	DIAMETER
ELEV	ELEVATION	CONN	CONNECTION	EFFLO	EFFLORESCENCE
EXT	EXTERIOR	CONST	CONSTRUCTION	HL	HAIR LINE
FH	FULL HEIGHT	DIAG	DIAGONAL	HVY	HEAVY
FW	FULL WIDTH	EXP	EXPANSION	HC	HONEY COMBING
HORIZ	HORIZONTAL	FB	FLOORBEAM	ID	IMPACT DAMAGE
INT	INTERIOR	FL	FLANGE	IR	IMPACTED RUST
L	LOWER	LAT BR	LATERAL BRACING	LT	LIGHT
N	NORTH	PL	PLATE	LB	LOOSE BOLT
S	SOUTH	SIP	STAY IN PLACE FORM	MAX	MAXIMUM
SYM	SYMMETRICAL	STIFF	STIFFENER	MIN	MINIMUM
U	UPPER	STR	STRINGER	MED	MEDIUM
VERT	VERTICAL	JT	JOINT	MB	MISSING BOLT
W	WEST			PITT	PITTING
				REM	REMAINING
				HR	HEAVY RUST
				MR	MEDIUM RUST
				LR	LIGHT RUST
				TYP	TYPICAL
				V	VISUAL CHECK
				✓	CHECKED, OK

LEGEND

OR SPALL	SPALLED AREA
OR H	HOLLOW SOUNDING AREA (DELAMINATION)
OR MC	MAP CRACKED AREA
OR HC	HONEY COMBED AREA
OR SCALE	SCALED AREA
OR PATCH	PATCHED AREA

I. MAIN TRUSS MEMBERS

General Note:

* Hvy. Rust Typ. @ Top 1' of FB-Truss Conn.
* MEMBERS HAVE UP TO 1/16" PITTING ON ≤ 5% OF SURFACES (TYP.)

(10) 1/4" IR x 10" L Btwn outer 2 East Gusset Pl's

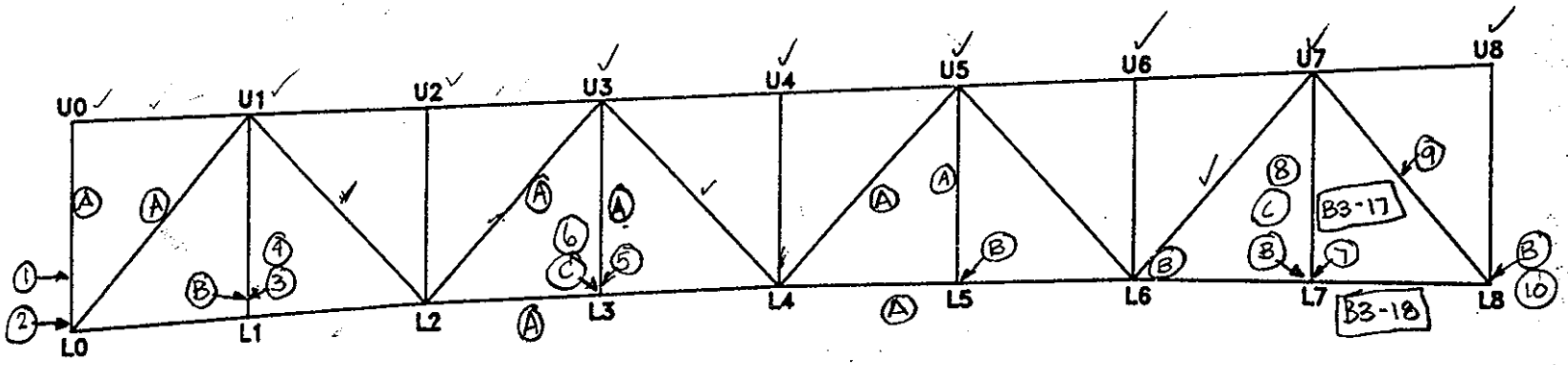

(A) Down Spout Bracket Welded to Truss Member

(B) Up to 1/8" Pitting x 1/2" Wide In board Faces of Gusset Pl's Along Edges of Vert. Channel

(C) Up to 1/8" Pit. Full width x 1" High In board Face Gusset Pl's Along top of Lower Chord

219

SPAN 7

W TRUSS E ELEVATION

NOTES:
1. 1/8" Pit. Up to Full Width 10% of East Face of Vertical Channel (OUTBOARD)
2. Isolated 1/8" x 1" ø Pitting on Outside of East Gusset & Inside of West Gusset Pl's
3. 1/4" IR x 4" Long btwn. West Gusset Pl + Vert. Channel, North Leg
4. Up to 3/16" Pit. East Face of Channel Web – 1" WIDE x 4" HIGH
5. Up to 3/16" Pit. 8" x 2" Inside Face of west Vertical Channel
6. 1/4" IR x 6" Btwn. E+W Gusset Pl & Lower Chord South
7. 1/4" IR Btwn Gusset Pl + Fill Pl West Face North & South.
8. Up to 1/8" Pitting 5% Surface Inside Face W. Channel
9. 1/4" IR Full Length btwn side Pl's

TRUSS ELEVATION	
DEPARTMENT OF THE ARMY NEW ENGLAND DIVISION CORPS OF ENGINEERS	
BOURNE HIGHWAY BRIDGE ROUTINE INSPECTION	
NOTES BY: LICHTENSTEIN CONSULTING ENGINEERS	
JOB #1784	DATE: 3/14/96
CREW: SD, PLON, JB	SHEET 2 OF 4

(9) Up to 1/4" x 4" H. IR Btwn. East Gusset PL & Southeast leg of Vert. Channel.

(10) Up to 3/8" IR Btwn. East Gusset PL & Lower chord cover PL.

(11) Up to 1/4" IR Btwn West Gusset PL & Vert. Channel

(12) Up to 3/16" Pitt. x 7"Ø West Face West Vert. Channel

(13) Up to 1/8" Pitt. x 6"L x 3"H West Channel Face

GENERAL NOTE:

* HVY RUST TYP. @ TOP 1' OF FB-TRUSS CONN.
* MEMBERS HAVE 1/16" PITTING ≤5% OF OUTER SURFACES (TYP.)

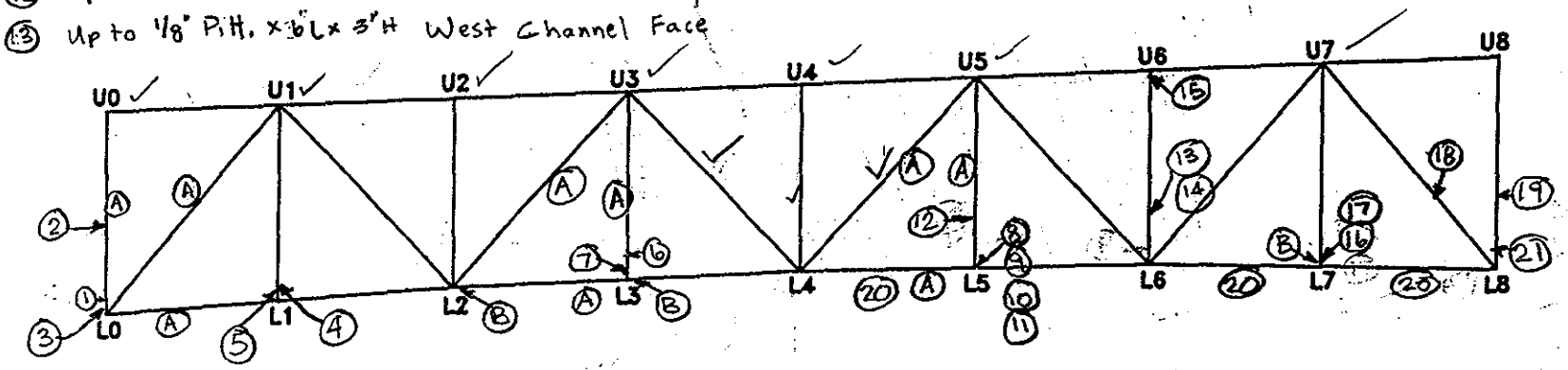

(A) Down Spout Bracket Welded to Truss Member

(B) 1/8" Pitting 1/2" Wide In Board Faces of Gusset PL's Along Edges of Vert. Channels

(19) Up to 1/8" Pitting 10% of Surface on West Channel, West Face

(20) Up to 1/8" Pitt. 5% of West Face Lower Chord

(21) 3 Mushroomed Rivet heads East Face of West Gusset PL

(14) 1/4" Pitting Full Width Bott N.E. Lacing Bar @ Cover PL

(15) Hvy. Rust Around Southside Floorbeam Connection Around Gusset PL

(16) Up to 5/16" IR Btwn. East Gusset PL's & Lower chord Member

(17) Up to 1/8" Pitting on West Gusset PL all Around Bracing Conn.

(18) Up to 1/4" IR Full Length btwn. Side PL's on Diagonal

NOTES:
(1) In Board Faces of gusset PL, 1/8" Pitting 10% of Surface
(2) 3/16" x 2"x4" Pitting at Channel Flange to lacing Bar Interface, W. Channel Only
(3) 1/8" Pitting Outboard Face of W. gusset PL, 10% of Surface
(4) Up to 1/8" Pitt. 25% Surface, West Face, W. Gusset
(5) 1/4" IR btwn. Gusset PL & Channel Flange.
(6) 1/4" Pitt. Full Width Bott. S.W. Lacing Bar @ Cover PL
(7) 1/8" Pitting over 25% of West Gusset PL
(8) 1/8" x Full Width x 1" HIGH (PITT.) In Board Face Gusset PL Along Top of Bott. Chord Channels.

SPAN 7

E TRUSS E ELEVATION

TRUSS ELEVATION

DEPARTMENT OF THE ARMY
NEW ENGLAND DIVISION CORPS OF ENGINEERS

BOURNE HIGHWAY BRIDGE
ROUTINE INSPECTION

NOTES BY: LICHTENSTEIN
CONSULTING ENGINEERS

JOB #1784 | DATE: 3/14/96
CREW: SD, PWN JB | SHEET 1 OF 4

2
219

General Note:
Bracing Bott. Gusset Pl's Typ. Flame Cut Around Member

N

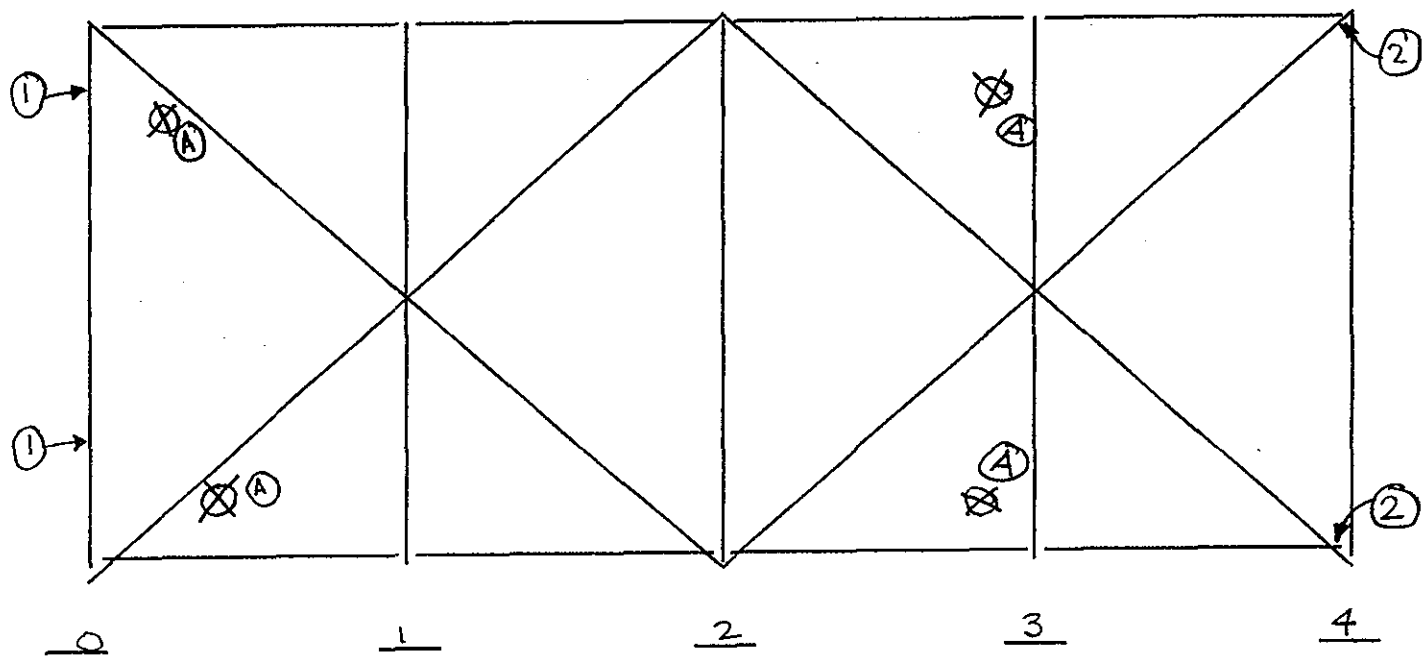

(A.) DownSpout Bracket Welded to Member

Legend
⊗ - Down Spout Location

SPAN 7

NOTES: (1.) Up to 1/4" Pitting, Upto Full Width of top of Diagonal Angle Leg (Condition Worsttens Near Panel Pt.) (Joint Leaks Above)
(2.) Bott. Gusset Pl. EXHIBITS Deterioration w/ 1/4" Pitt. over 25% of Surface & Hvy Rust Scale. IR Btwn Gusset Pl & Bott. Flange.

LOWER CHORD BRACING	
DEPARTMENT OF THE ARMY NEW ENGLAND DIVISION CORPS OF ENGINEERS	
BOURNE HIGHWAY BRIDGE ROUTINE INSPECTION	
NOTES BY: LICHTENSTEIN CONSULTING ENGINEERS	
JOB #1784	DATE: 3/14/96
CREW: SD, PWN, JB	SHEET 3 OF 4

3
219

General Note:

Bracing Bott. Gusset PL's Typ. Flame cut Around Member.

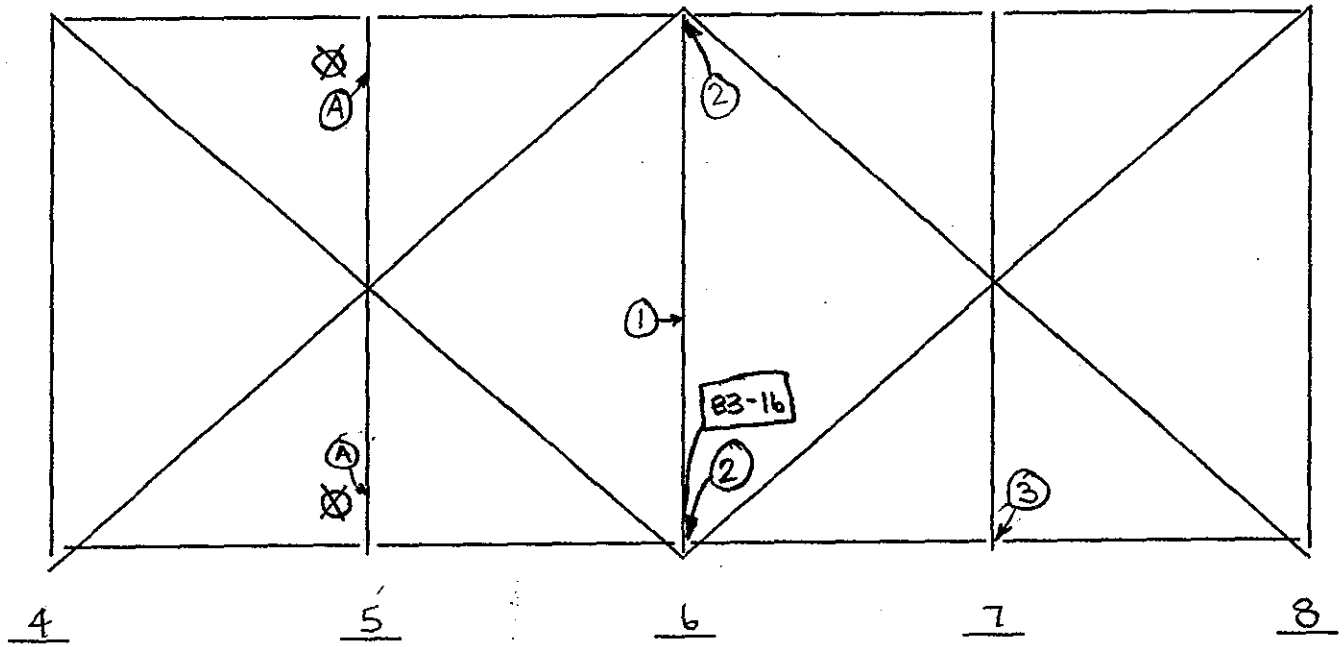

Legend

⊗ = DownSpout Location

Ⓐ DownSpout Bracket Welded to Member

SPAN 7

NOTES:

1. Up to 1/8" Pitting 10% of Surface on Bott. Chord Bracing
2. Bott. Gusset PL EXHIBITS Deterioration w/1/4" Pitt. over 25% of Surface & Hvy Rust Scale. IR Btwn. Gusset PL & Bott. Flange.
3. 3/16" Pitting x 6" L x 3" H on Bracing Connect. PL

LOWER CHORD BRACING	
DEPARTMENT OF THE ARMY NEW ENGLAND DIVISION CORPS OF ENGINEERS	
BOURNE HIGHWAY BRIDGE ROUTINE INSPECTION	
NOTES BY: LICHTENSTEIN CONSULTING ENGINEERS	
JOB #1784	DATE: 3/14/96
CREW: SD, PWN, JJB	SHEET 4 OF 4

219

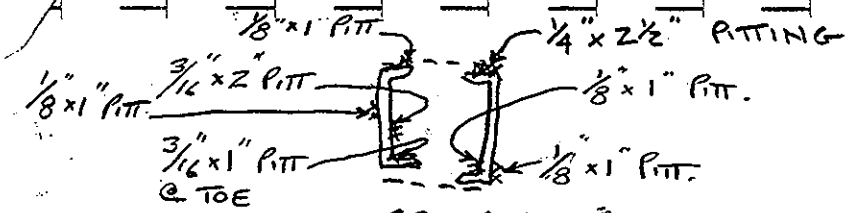

SEC. A-A

NOTE: HEAVY VIBRATION OF ENTIRE TRUSS SYSTEM UNDER LIVE LOAD IMPACT AT DECK JOINT, PIER 3

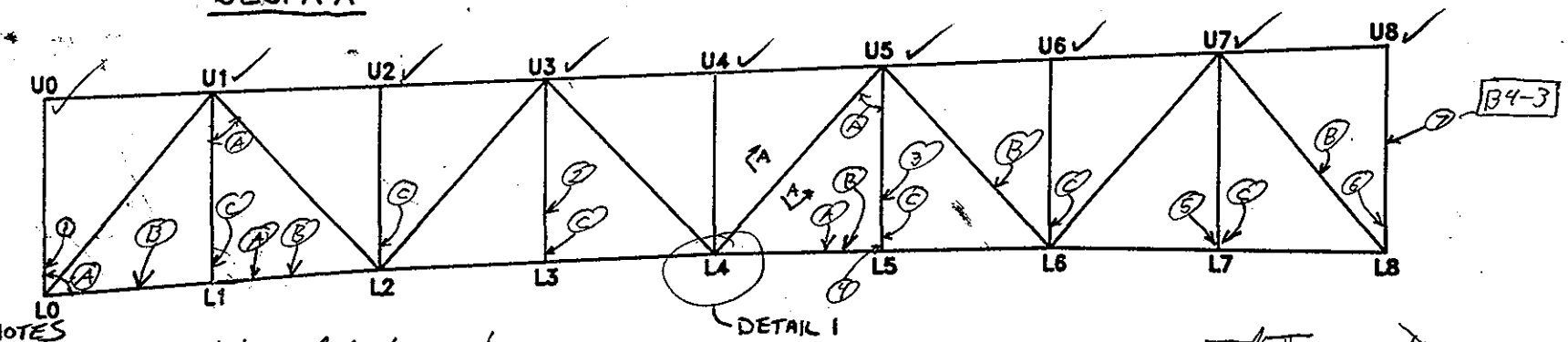

TYP. NOTES

A) Downspout bracket welded to member

B) 1/4" IR Between cover plates of truss member.

C) 1/8" pitting on inside of gusset plates at vertical channels, all around

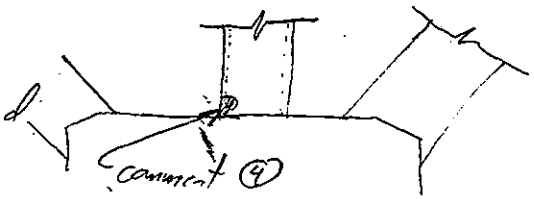

DETAIL 1

5 219

OVERALL CONDITIONS:

TRUSS MEMBERS EXHIBIT 1/8" PITT. (TYP.) ≤ 5% OF SURFACE AREA W/ WORST CASES NOTED BELOW.

SPAN 5

W TRUSS E ELEVATION

NOTES:
1) Up to 1/4" pitting, full width, both bottom lacing bars, north face of vertical.
2) Pitting on inside web of west channel w/ 3/16" pitting x 5"ϕ.
3) 1/4" pitting, 4" x 5" on inside face of west channel web.
4) 1/4" pitting, 2"ϕ outside edge at east channel web adjacent to vertical gusset plate. (DETAIL 1)
5) 1/4" IR Between gusset plate on west vertical channel and spacer plate.
6) 6"ϕ area of 1/4" pitting w/ 2-1in² holes, bottom vertical end plate, south end.
7) 10% of lacing bars on vertical have up to 50% section loss.

TRUSS ELEVATION	
DEPARTMENT OF THE ARMY NEW ENGLAND DIVISION CORPS OF ENGINEERS	
BOURNE HIGHWAY BRIDGE ROUTINE INSPECTION	
NOTES BY: LICHTENSTEIN CONSULTING ENGINEERS	
JOB #1784	DATE: 3/18/96
CREW: JB, PWN	SHEET 1 OF 6

General Note: Floor beam to truss connections have 1 ft² heavy rust at top of connection.

9) Up to 3/16" pitting on outside face of channel webs, west face only. (≤ 5% SA)

10) 1/4" pitting, 2" φ, outside face of channel web, west face.

11) On channel flanges between lacing bars (over approximately 50%), up to 3/16" pitting, 2" φ.

12) Up to 1/4" IR Between vertical gusset plate and channel.

13) Up to 1/8" pitting on vertical channel web, west outer face. (≤ 5% SA)

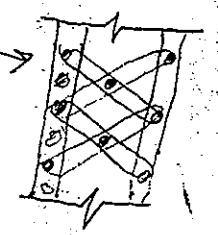

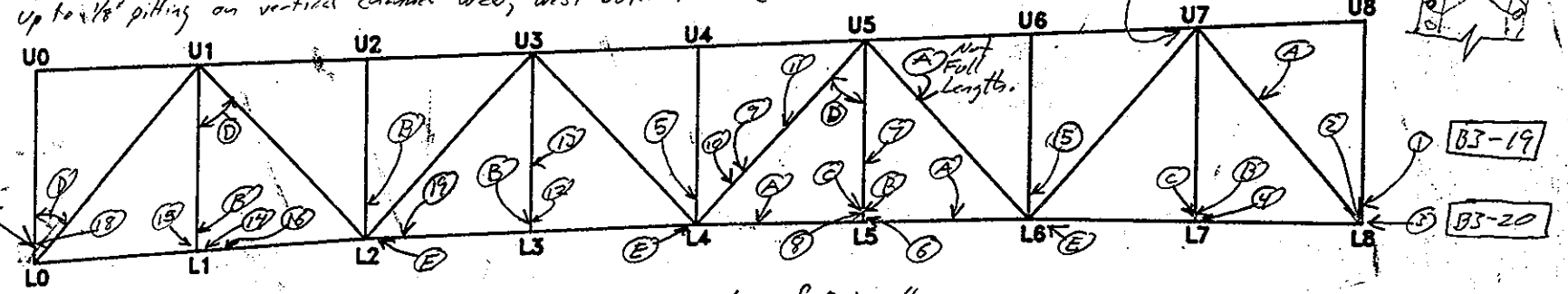

(A) Up to 1/4" IR between outer two side cover plates, full length.

(B) 1/8" pitting, 1/2" wide on inside face of gusset plates at vertical channel interface (All around.)

(C) 1/8" pitting on vertical gusset plate at cross bracing connection angles.

(D) Downspout welded to member

(E) Flame cut brackets between bottom of lower cord and cross bracing has IR up to 1/4" and heavy rust scale.

* GENERAL NOTE: 1/16" PITTING UP TO 5% SURFACE AREA ON OUTBOARD FACES OF TRUSS MEMBERS TYP.

SA - Surface Area

18) 2 - 3/16 × 2" φ pitting, inboard east vertical channel web.

19) 1/2" IR between cover plates, east face only. Condition exists over 2' length at south end.

14) 1/8" pitting along inside face of vertical gusset plate at lower cord channel flange.

15) Up to 1/4" IR Between vertical gusset plate and lower cord channel web. (North & South)

16) 1 in² hole on lower cord end plate. 3/16" to 1/4" pitting around hole, 6" L × 2" W. (L1, L2 - Top of Lower cord.)

17) Med. to heavy rust over 50% of vertical gusset plate, west face.

SPAN 5

E TRUSS W ELEVATION

NOTES:
1) 2 in² hole in bottom of end plate between vertical channels, north face & south face.
2) (3) 3/16", 6" φ pitting on west face of vertical channel.
3) Vertical stiffener plate above bearing has up to 1/4" IR & 3/16" pitting over 10% SA (IR Between stiffener plate & connection angle.)
4) 1/8" pitting, 5" φ on vertical end plate, north face.
5) Up to 1/4" pitting on bottom lacing bar, full width, 5" Long. (North face of vertical)
6) Up to 1/4" IR between gusset plate & vertical channel., FULL WIDTH OF BOTT OF CHANN.
7) Up to 3/16" pitting on vertical channel web, up to 1/2 width, ≤ 5% total SA
8) Up to 3/16" pitting, 7" φ, inside face of east channel web at panel point.

TRUSS ELEVATION	
DEPARTMENT OF THE ARMY NEW ENGLAND DIVISION, CORPS OF ENGINEERS	
BOURNE HIGHWAY BRIDGE ROUTINE INSPECTION	
NOTES BY: LICHTENSTEIN CONSULTING ENGINEERS	
JOB #1784	DATE: 3/15/96
CREW: JB, PWH, SD	SHEET 1 OF 3

6
219

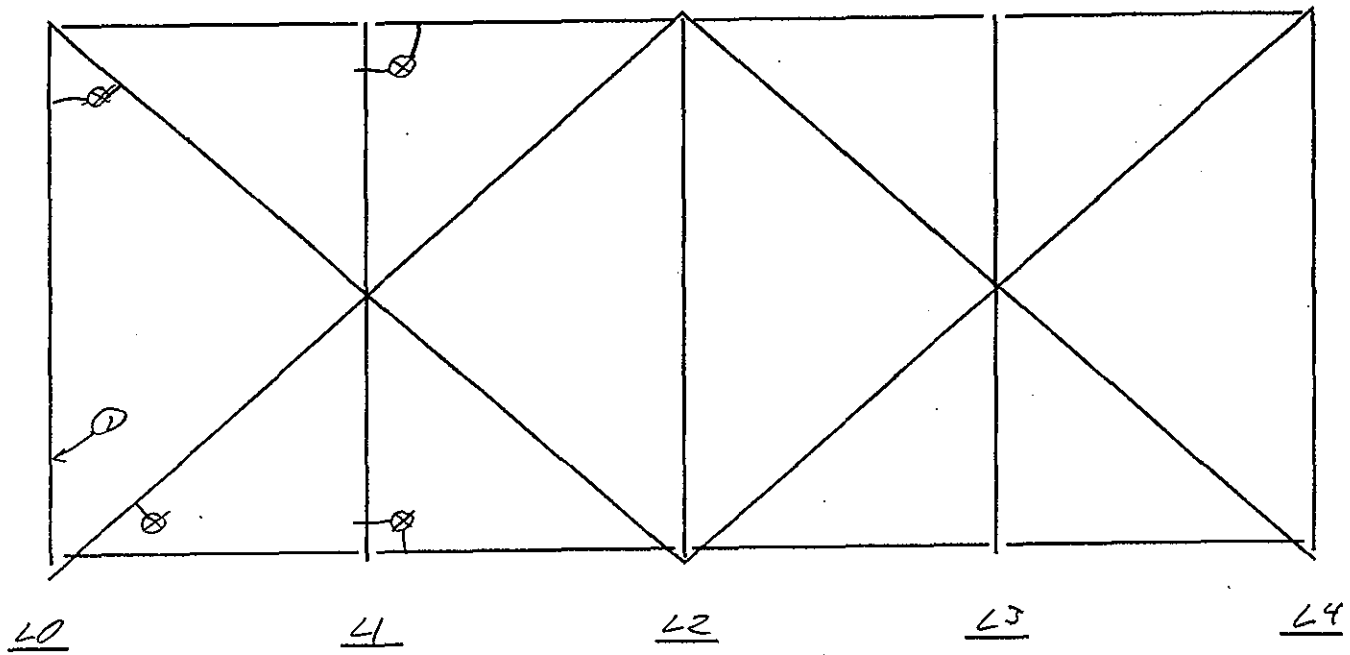

SPAN 5

NOTES: 1) 1/8" pitting on wind bracing angle legs, top & bottom. Pitting is 100% along bottom 1/4 of bracing members. — DIAGONAL X-BRACE - SWAY

LOWER CHORD BRACING	
DEPARTMENT OF THE ARMY NEW ENGLAND DIVISION CORPS OF ENGINEERS	
BOURNE HIGHWAY BRIDGE ROUTINE INSPECTION	
NOTES BY: LICHTENSTEIN CONSULTING ENGINEERS	
JOB #1784	DATE: 3/15/96
CREW: JB, PON, SD	SHEET 2 OF 3

219

⊗ - Down spout

Z

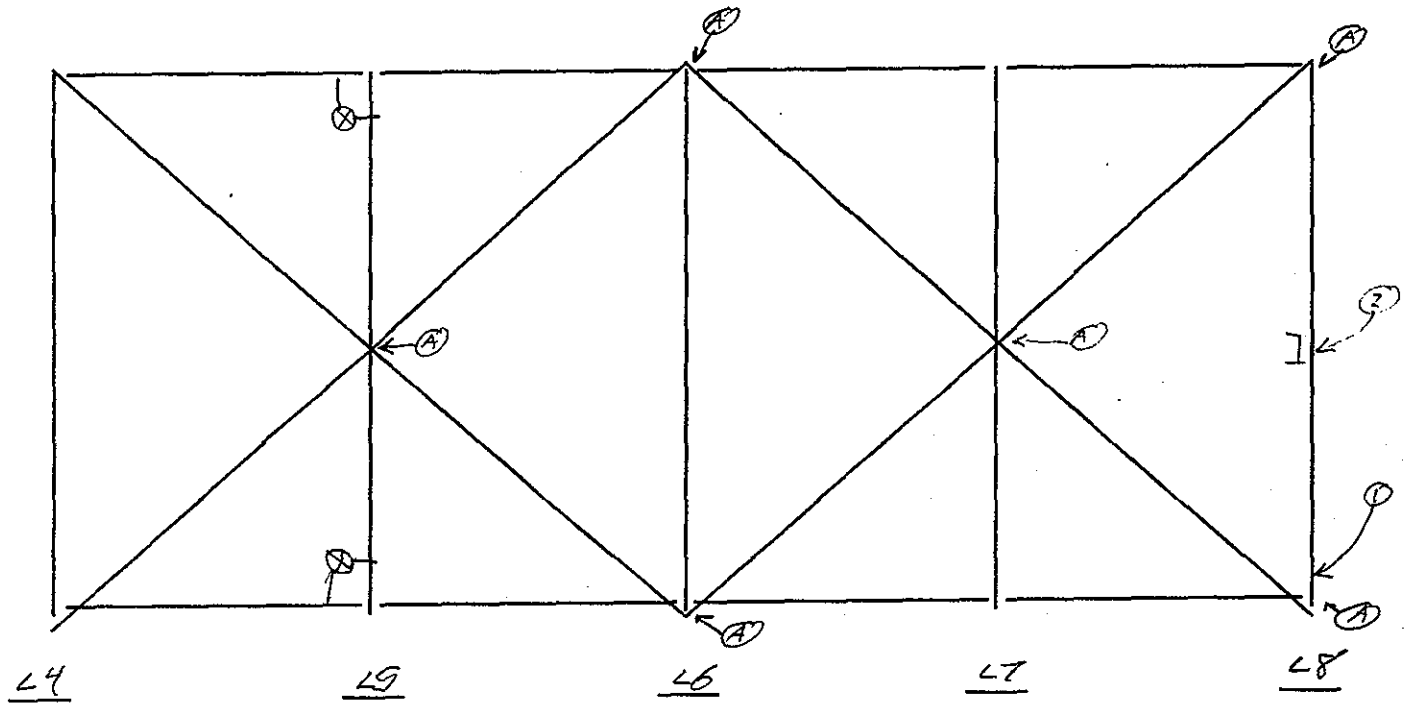

(A) Bottom bracing gusset plates, flame cut.

(B) Up to 7/16" pitting on cross bracing flange angles. Max. Condition exists on half width of one angle leg.

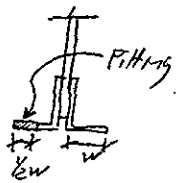

SPAN 5

NOTES: 1) Up to ½" IR between vertical stiffener angles on cross beam (Both north & south sides) above gacking plate
2) Loose ladder bracket w/heavy vibration noted under live load.

LOWER CHORD BRACING	
DEPARTMENT OF THE ARMY NEW ENGLAND DIVISION CORPS OF ENGINEERS	
BOURNE HIGHWAY BRIDGE ROUTINE INSPECTION	
NOTES BY: LICHTENSTEIN CONSULTING ENGINEERS	
JOB #1784	DATE: 3/15/96
CREW: JB, PWH, SD	SHEET 3 OF 3

8
219

1) L6, west truss. Up to 5/16" pitting on wind bracing gusset plate. Pitting extends full length x 1" wide

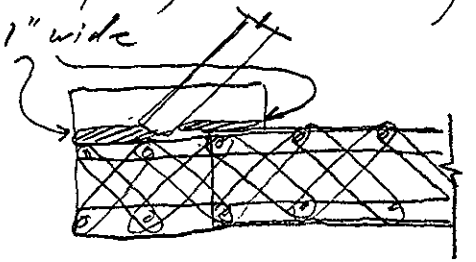

2) L8, west truss. Cross bracing connection to jacking beam. Gusset plate connection angles have mushroomed rivets. Gusset plate has 1/8" pitting all around cross bracing angle legs.

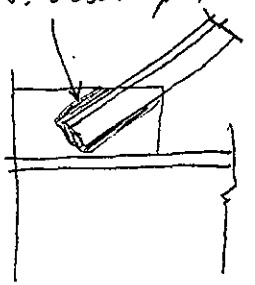

9
219

SPAN 5
BRACING

NOTES:

DEPARTMENT OF THE ARMY
NEW ENGLAND DIVISION CORPS OF ENGINEERS

BOURNE HIGHWAY BRIDGE
ROUTINE INSPECTION

NOTES BY: LICHTENSTEIN
CONSULTING ENGINEERS

JOB #1784	DATE: 3/18/96
CREW: JB, PWH	SHEET 2 OF 6

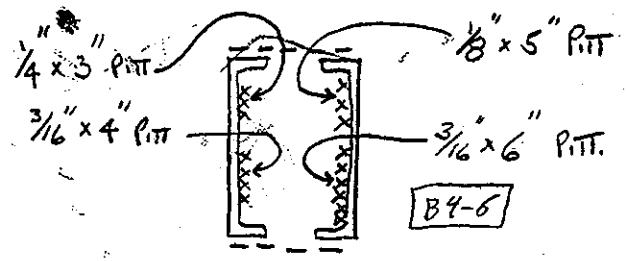

SEC. A-A

TYPICAL:

TRUSS MEMBERS EXHIBIT UP TO 1/8" PITTING UP TO FULL WIDTH ON CHANNEL WEBS

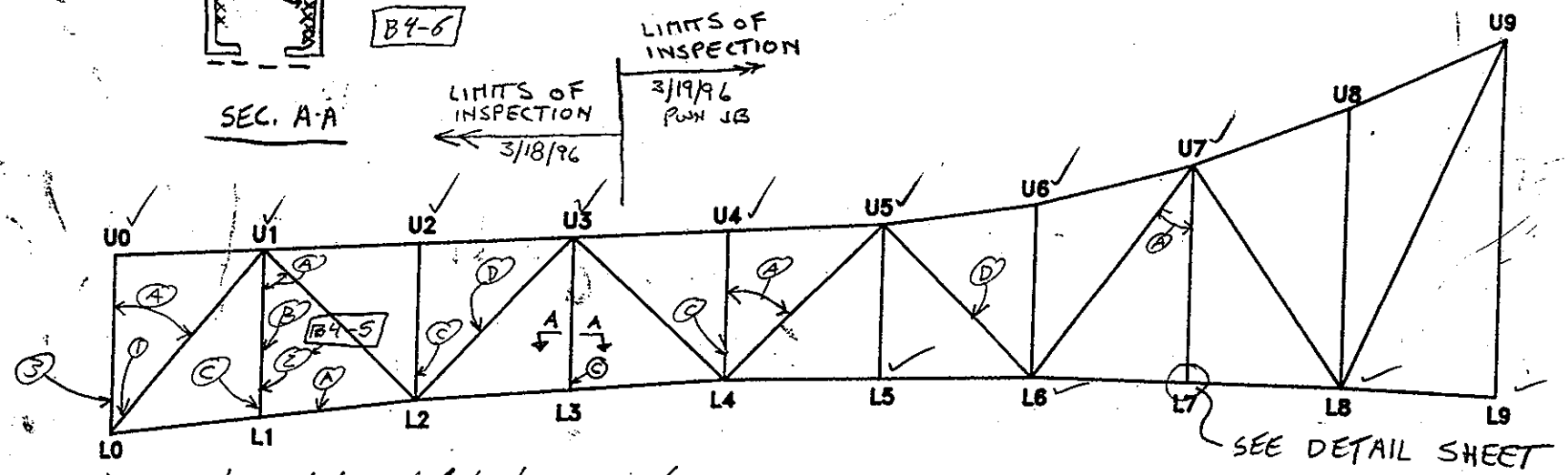

A) Downspout bracket welded to truss member.
B) Up to 3/16" pitting on vertical channel web at gusset plate interface. Typically full width. (Outside face of channels)
C) 1/8" pitting on inside face of gusset plates at vertical channels, all around, 1/2" WIDE
D) 1/4" IR between cover plates of truss member, FULL LENGTH

SPAN 3

W TRUSS E ELEVATION

NOTES: 1) Stiffener plate connection angle at east diagonal web has up to 1/2" IR over 6" length a bottom.
2) 3/16" pitting on inside face of east channel web. (Pitting is 2" wide).
JB (3/22/96) 3) 1/8" pitting on gusset plate adjacent to diagonal member (L0-U1). Condition exists at west gusset plate only.

TRUSS ELEVATION	
DEPARTMENT OF THE ARMY NEW ENGLAND DIVISION CORPS OF ENGINEERS	
BOURNE HIGHWAY BRIDGE ROUTINE INSPECTION	
NOTES BY: LICHTENSTEIN CONSULTING ENGINEERS	
JOB #1784	DATE: 3/18/96
CREW: JB PWH	SHEET 3 OF 6

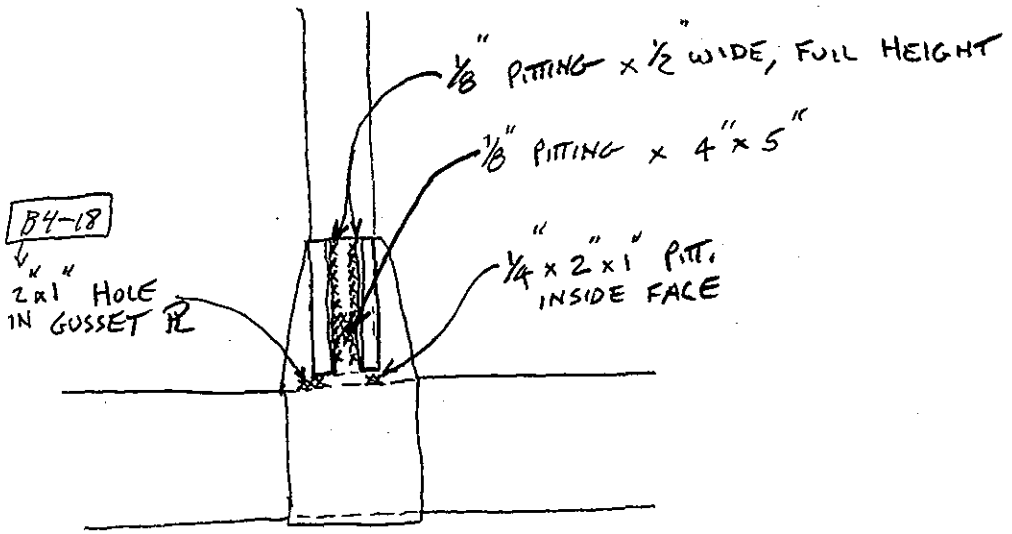

L7
WEST TRUSS
SPAN 3
(EAST ELEV.)

11
219

NOTES:

DEPARTMENT OF THE ARMY NEW ENGLAND DIVISION CORPS OF ENGINEERS	
BOURNE HIGHWAY BRIDGE ROUTINE INSPECTION	
NOTES BY: LICHTENSTEIN CONSULTING ENGINEERS	
JOB #1784	DATE: 3/19/96
CREW: Pwt, JB	SHEET 2 OF 8

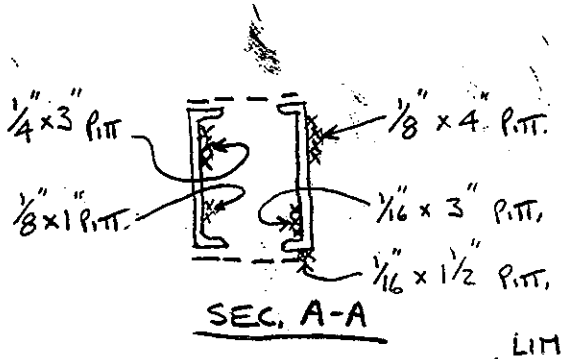

TYPICAL:

TRUSS MEMBERS EXHIBIT MISC. PITTING UP TO 1/8" DEEP + UP TO FULL WIDTH ON CHANNEL WEBS.

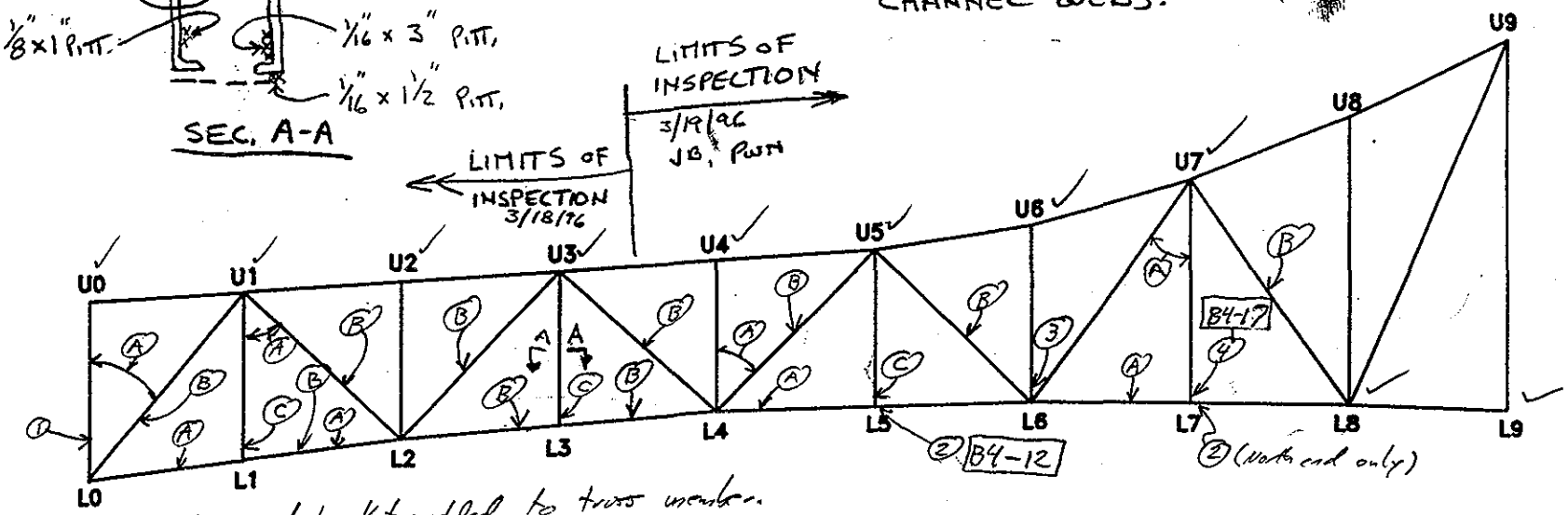

A) Downspout support bracket welded to truss member.
B) 1/4" IR between cover plates of truss member, FULL LENGTH
C) 1/8" pitting on inside face of gusset plates at vertical channels, 1/2" WIDE, ALONG ALL EDGES OF [

12/219

SPAN 3

E TRUSS E ELEVATION

NOTES: 1) Vertical bottom stiffener plate has up to 3/16" pitting, 1" ϕ at top of plate.
2) Bottom end plate on lower cord member at panel point has 100% section loss at edges of plate (1" x full width) w/other pinholes present (Both north & south ends.)
3) 1/8" pitting on web plate of vertical, outside face, west elev., adjacent to gusset plate (1" x Full width)
4) 1/4" pitting, 5" ϕ at bottom of vertical gusset plate, north end, west face (SEE DETAIL SHEET)

TRUSS ELEVATION

DEPARTMENT OF THE ARMY
NEW ENGLAND DIVISION CORPS OF ENGINEERS

BOURNE HIGHWAY BRIDGE
ROUTINE INSPECTION

NOTES BY: LICHTENSTEIN
CONSULTING ENGINEERS

JOB #1784	DATE: 3/18/96
CREW: JB PWH	SHEET 4 OF 6

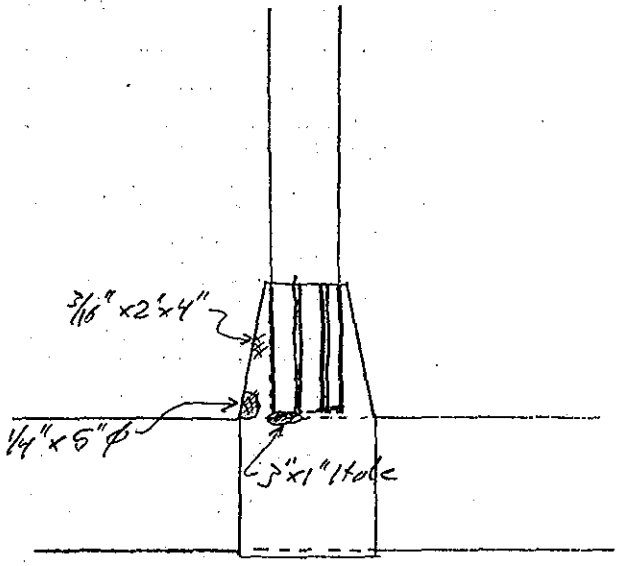

L7
EAST TRUSS
SPAN 3

BA-17

DEPARTMENT OF THE ARMY NEW ENGLAND DIVISION CORPS OF ENGINEERS	
BOURNE HIGHWAY BRIDGE ROUTINE INSPECTION	
NOTES BY: LICHTENSTEIN CONSULTING ENGINEERS	
JOB #1784	DATE: 3/19/96
CREW: Pwn JG	SHEET 1 OF 8

GENERAL NOTE: Up to 3/4" IR between bracing flange angles & corners of gusset plates at panel point locations.

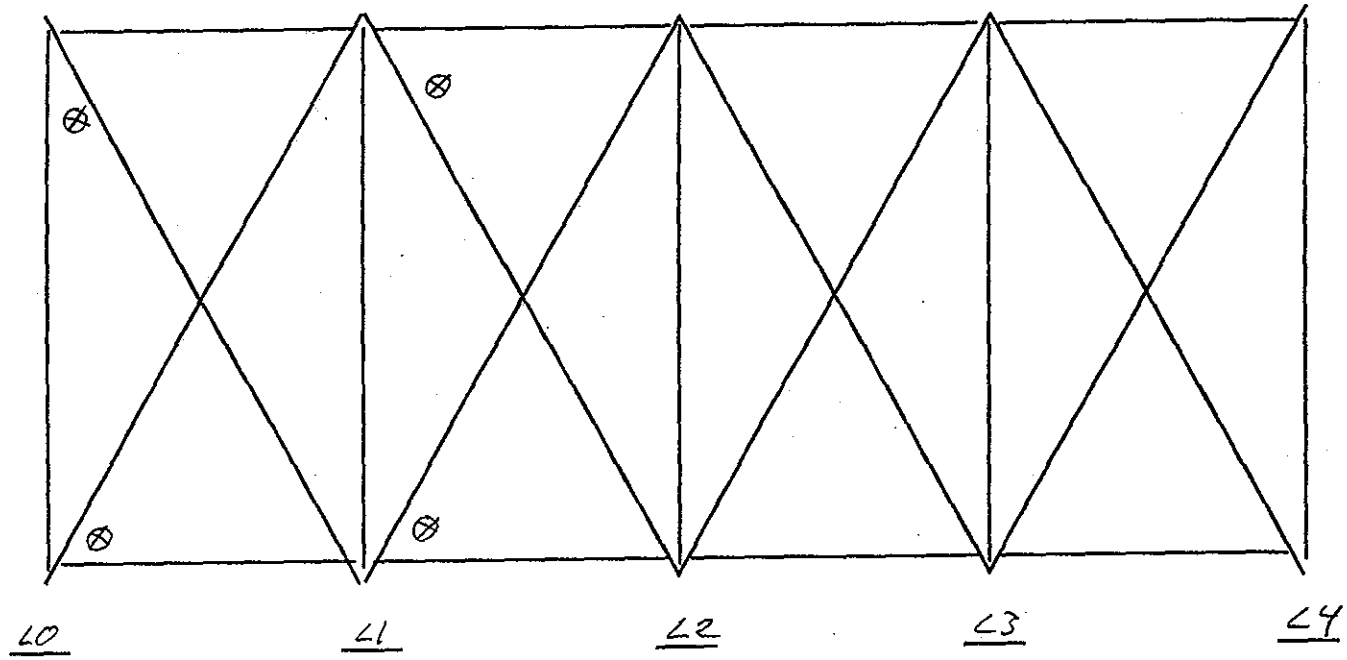

⊗ - Downspout location

GENERAL NOTE:

BRACING MEMBER FLANGES EXHIBIT MISC. PITTING, UP TO 1/8" + UP TO FULL WIDTH

SPAN 3

NOTES:

LOWER CHORD BRACING	
DEPARTMENT OF THE ARMY NEW ENGLAND DIVISION CORPS OF ENGINEERS	
BOURNE HIGHWAY BRIDGE ROUTINE INSPECTION	
NOTES BY: LICHTENSTEIN CONSULTING ENGINEERS	
JOB #1784	DATE: 3/19/96
CREW: JG, WN	SHEET 8 OF 8

219 14 612

GENERAL NOTE: Up to 3/4" IR between bracing flange angles and corners of gusset plates at sway bracing locations.
SEE DETAIL 1 BELOW

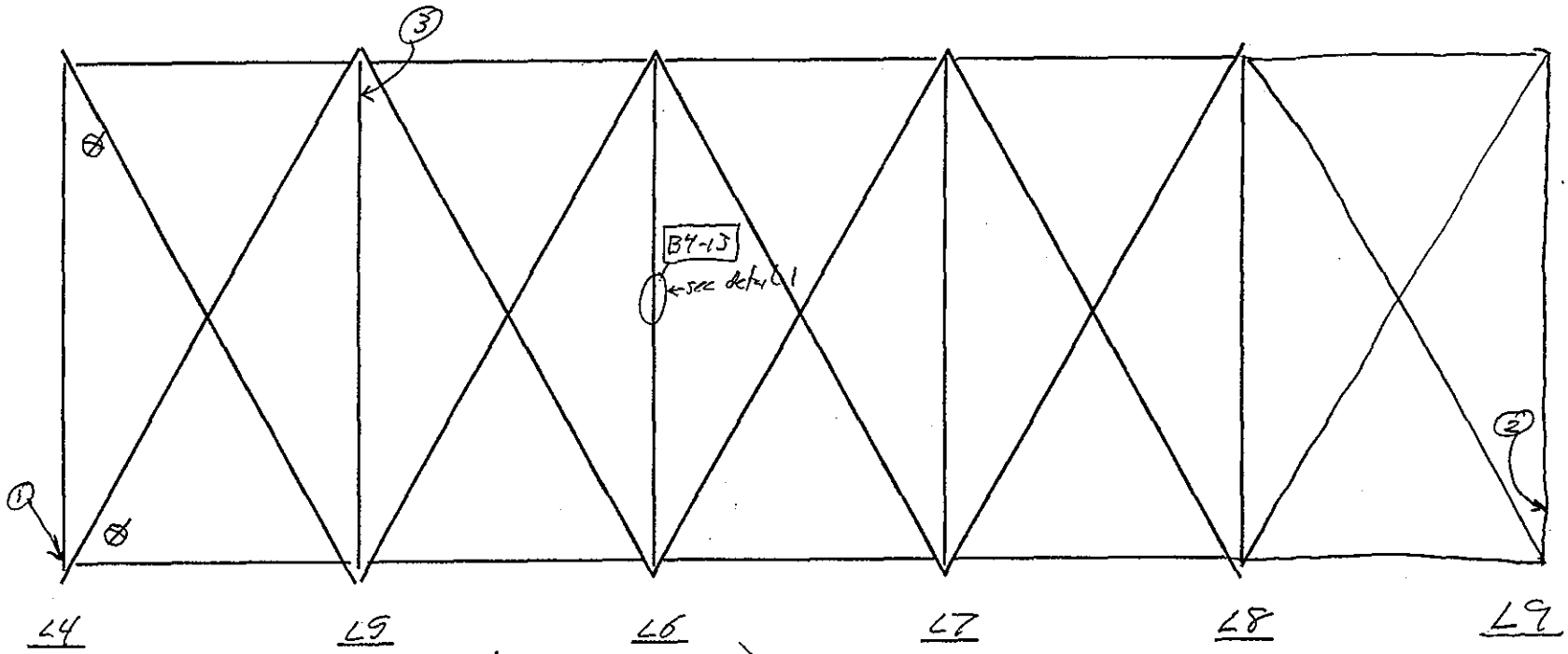

⊗ – Downspout location.

GENERAL NOTE:

TOPS OF BRACING MEMBER FLANGES EXHIBIT MISC. PITTING W/ UP TO 1/8" PITTING UP TO FULL WIDTH OF FLANGES

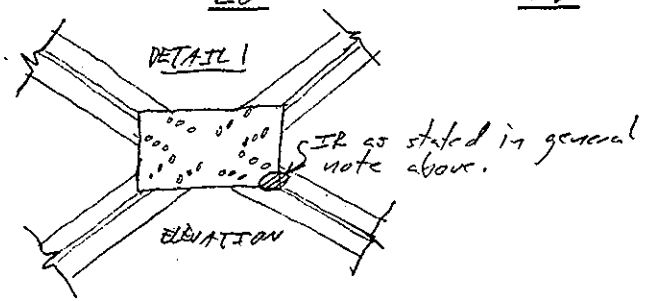

SPAN 3

NOTES:
1) Horizontal gusset plate at bracing / truss interface have 2 – 1in² holes w/pitting.
2) 2in² hole in bottom end plate of horizontal wind bracing beam. Mod. to heavy rust scale around hole.
3) 7/16" IR Between wind bracing gusset plate & flange angles of bracing member. (North & South)

LOWER CHORD BRACING

DEPARTMENT OF THE ARMY
NEW ENGLAND DIVISION CORPS OF ENGINEERS

BOURNE HIGHWAY BRIDGE
ROUTINE INSPECTION

NOTES BY: LICHTENSTEIN CONSULTING ENGINEERS

JOB #1784 | DATE: 3/19/96
CREW: JB, RWN | SHEET 7 OF 8

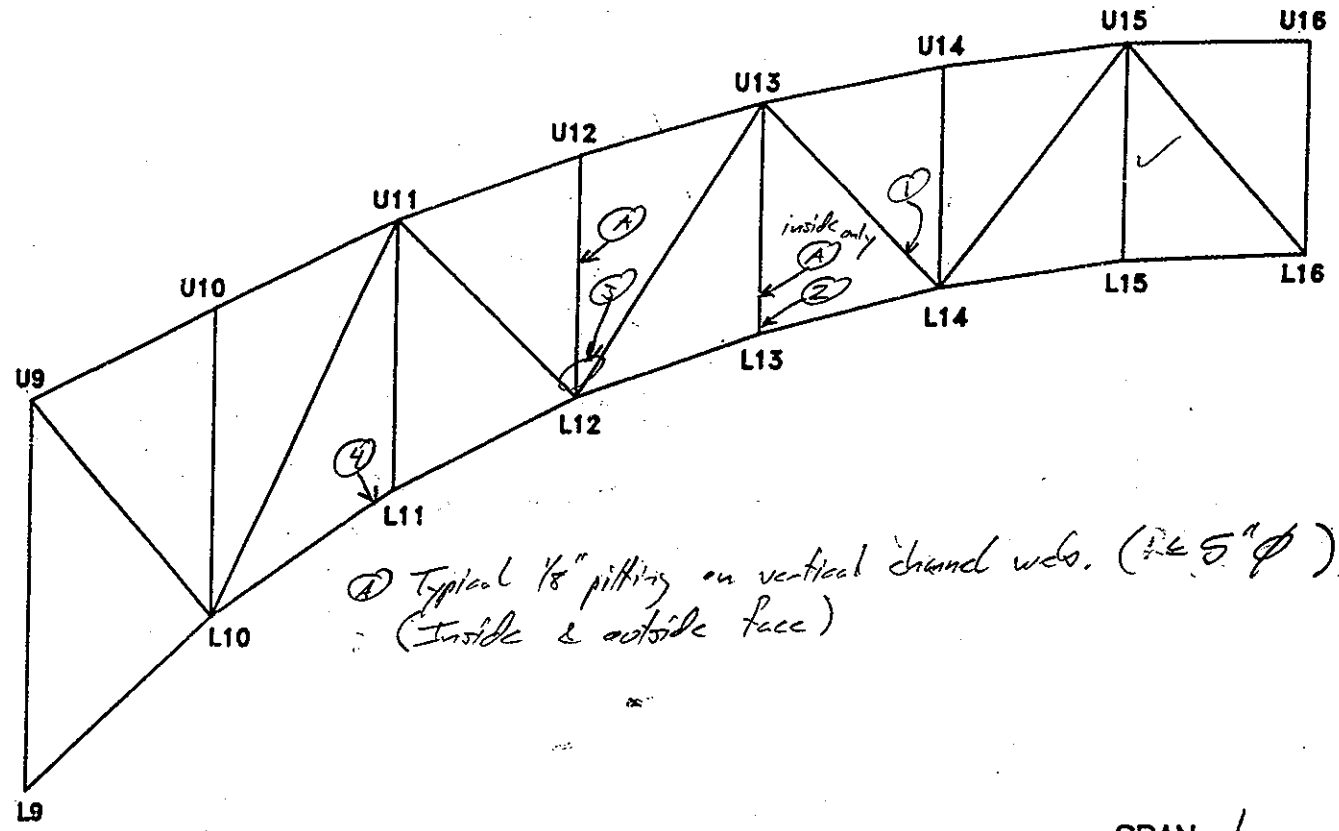

16
219

SPAN 1

W TRUSS E ELEVATION

NOTES:
1) Up to 3/16" pitting - 5"φ on diagonal stiffener plate.
2) Up to 3/16" pitting on vertical gusset plate at interface to horizontal wind bracing gusset PL. (Condition exists for 1" wide x 8" long area.)
3) Light 1/16" deep pitting on vertical gusset plate, east face. (≤ 5"φ)
4) 1"φ hole in top batten plate on L10-L11.

TRUSS ELEVATION

DEPARTMENT OF THE ARMY
NEW ENGLAND DIVISION CORPS OF ENGINEERS

BOURNE HIGHWAY BRIDGE
ROUTINE INSPECTION

NOTES BY: LICHTENSTEIN
CONSULTING ENGINEERS

JOB #1784	DATE: 3-25-96
CREW: JAB/EL	SHEET 2 OF 4

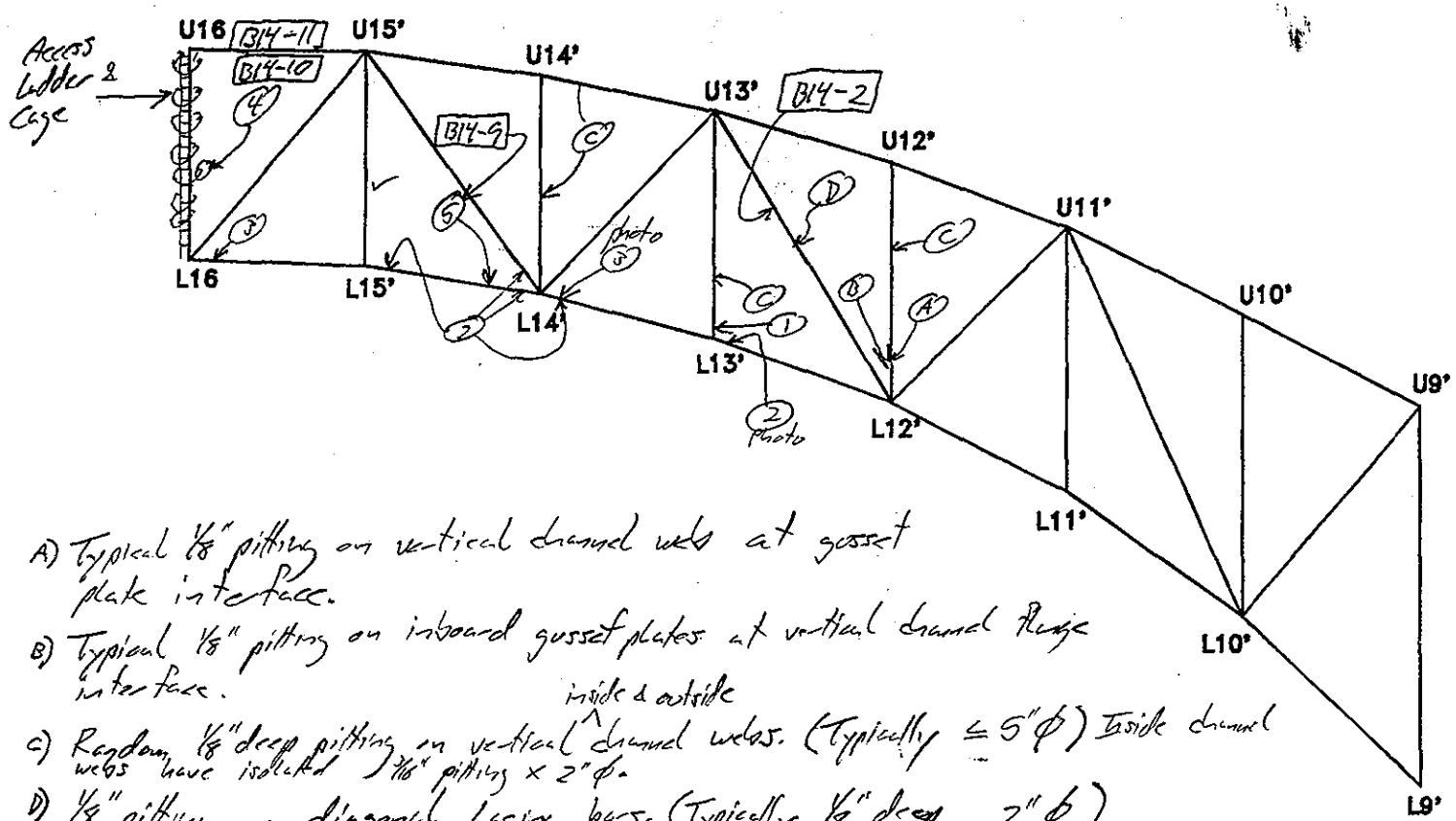

A) Typical 1/8" pitting on vertical channel web at gusset plate interface.

B) Typical 1/8" pitting on inboard gusset plates at vertical channel flange interface.

C) Random 1/8" deep pitting on vertical inside & outside channel webs. (Typically ≤ 5"φ) Inside channel webs have isolated 1/16" pitting × 2"φ.

D) 1/8" pitting on diagonal lacing bars. (Typically 1/8" deep, 2"φ)

17 219

SPAN 1

W TRUSS E ELEVATION

NOTES:
1. 1/4" deep pitting - half width on vertical, bottom lacing bar, north face.
2. 6"×6" plate welded to lower cord end plate at L13'. B14-3 (condition exists on top batten plate, bottom batten plate & stiffener plate.
3. Catwalk support bracket welded to top flange of lower cord member B14-4
4. Ladder access cage has broken weld at 4' support bracket from bottom.
5. Catwalk grating bars have 100% section loss on several bars over 5' long area.

TRUSS ELEVATION	
DEPARTMENT OF THE ARMY NEW ENGLAND DIVISION CORPS OF ENGINEERS	
BOURNE HIGHWAY BRIDGE ROUTINE INSPECTION	
NOTES BY: LICHTENSTEIN CONSULTING ENGINEERS	
JOB #1784	DATE: 1/25/96
CREW: RD/EL	SHEET 1 OF 4

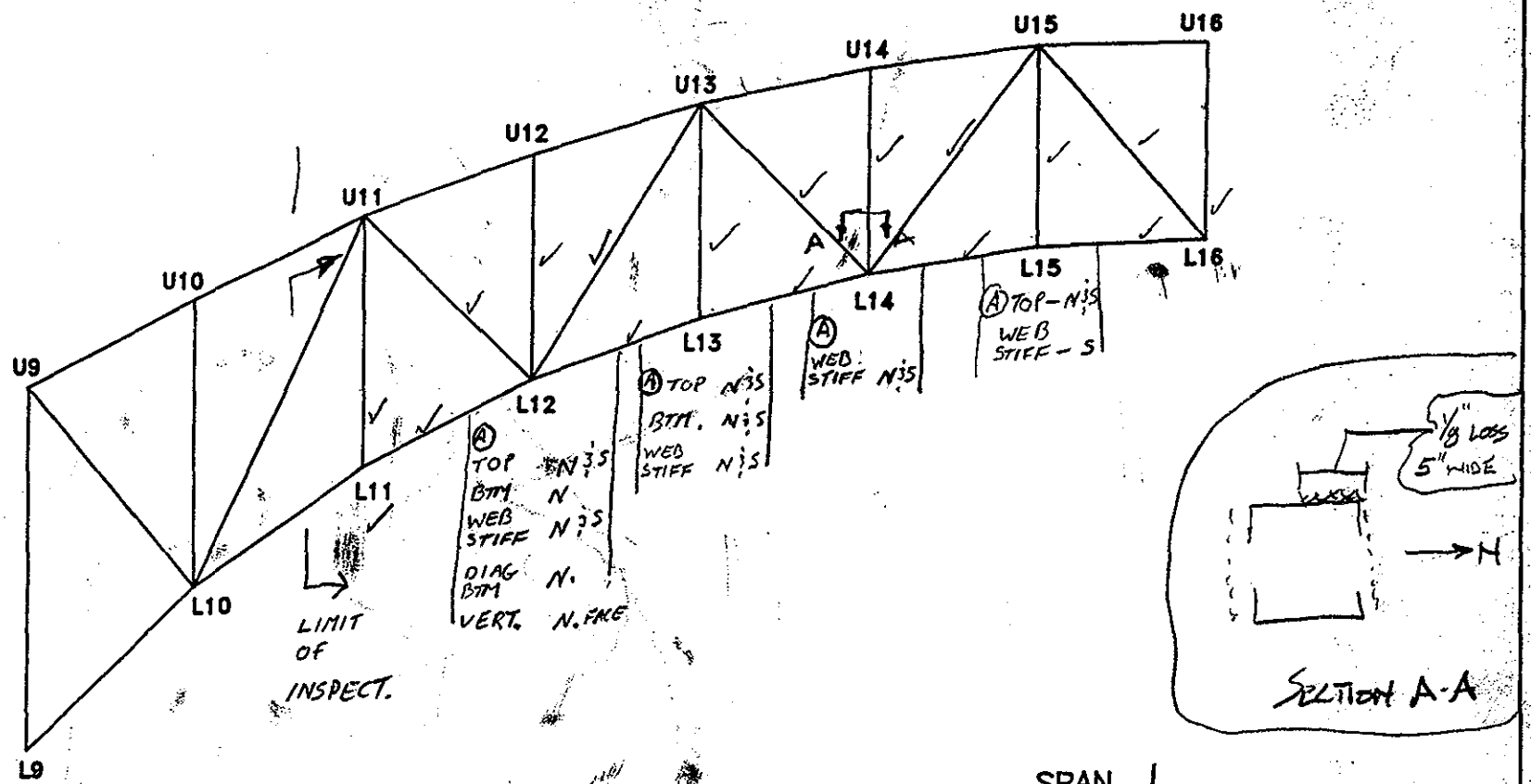

SPAN 1

E TRUSS E ELEVATION

NOTES: A WELDED REPAIR R ≈ 1/2" x 6" x 6"

TRUSS ELEVATION	
DEPARTMENT OF THE ARMY NEW ENGLAND DIVISION CORPS OF ENGINEERS	
BOURNE HIGHWAY BRIDGE ROUTINE INSPECTION	
NOTES BY: LICHTENSTEIN CONSULTING ENGINEERS	
JOB #1784	DATE: 3/25/96
CREW: FF, WZ	SHEET 2 OF 2

18
219

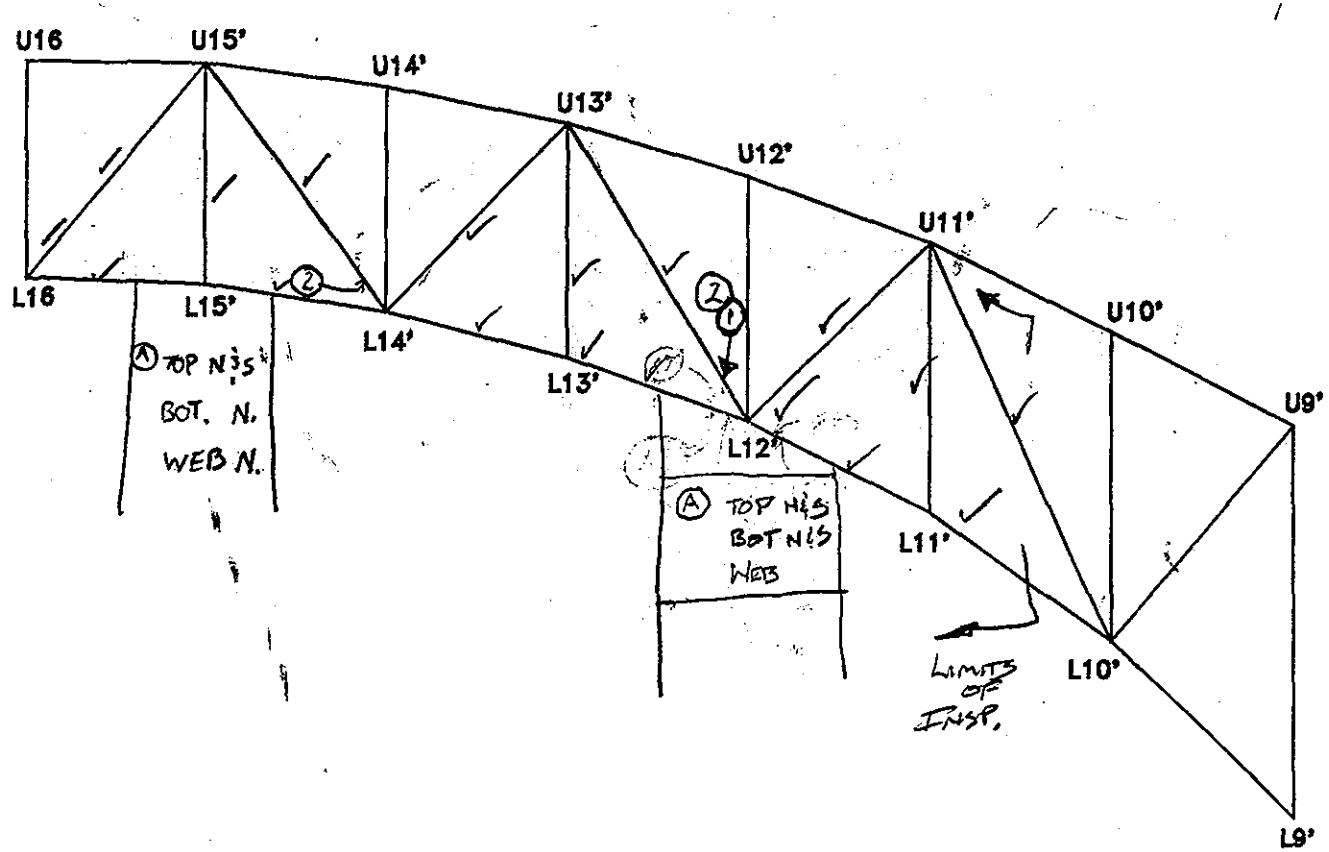

SPAN 1

E TRUSS E ELEVATION

NOTES: (A) WELDED REPAIR PL ≈ 1/2" x 6" x 6" { T. - TOP COV. PL / W. - INTERIOR WEB STIFF. PL. OF VERT / B. - BOT. COV. PL }

(1) 1/4" DEEP PITT. x 2" W x 12" LONG ALONG E. EDGE, INTERIOR WEB STIFF. PL

(2) 1/4" Ø HOLE IN BOT EDGE, INT. WEB STIFF. PL.

TRUSS ELEVATION	
DEPARTMENT OF THE ARMY NEW ENGLAND DIVISION CORPS OF ENGINEERS	
BOURNE HIGHWAY BRIDGE ROUTINE INSPECTION	
NOTES BY: LICHTENSTEIN CONSULTING ENGINEERS	
JOB #1784	DATE: 3/25/96
CREW: TF, WW	SHEET 1 OF 2

19
219

General Note: Interior of built-up, box diagonals have light to medium rust on interior of channel legs. (A) Isolated area of peeling paint was also observed.

N

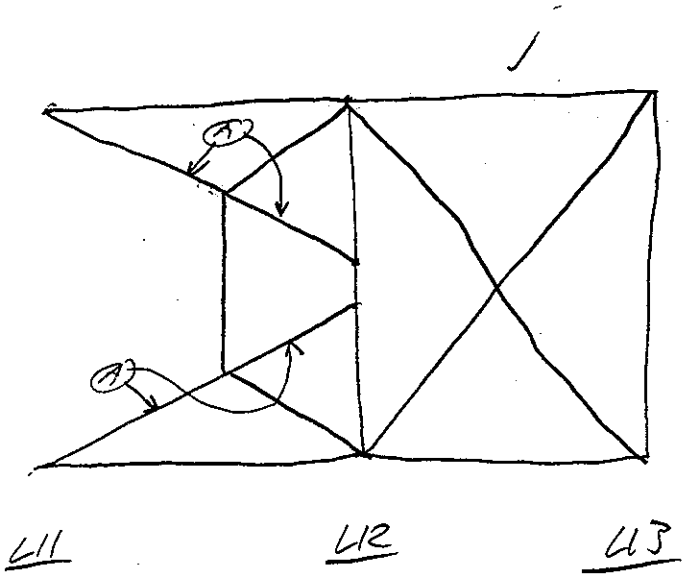

SPAN 1 - LOWER CHORD BRACING

___ ~~ABUTMENT~~

___ ~~ELEVATION~~

NOTES:

SUBSTRUCTURE

DEPARTMENT OF THE ARMY
NEW ENGLAND DIVISION CORPS OF ENGINEERS

BOURNE HIGHWAY BRIDGE
ROUTINE INSPECTION

NOTES BY: LICHTENSTEIN
CONSULTING ENGINEERS

JOB #1784	DATE: 3·25·96
CREW: JAB/EL	SHEET 4 OF 4

20
219

General Note: Occasional light rust on bracing members w/very light pitting.

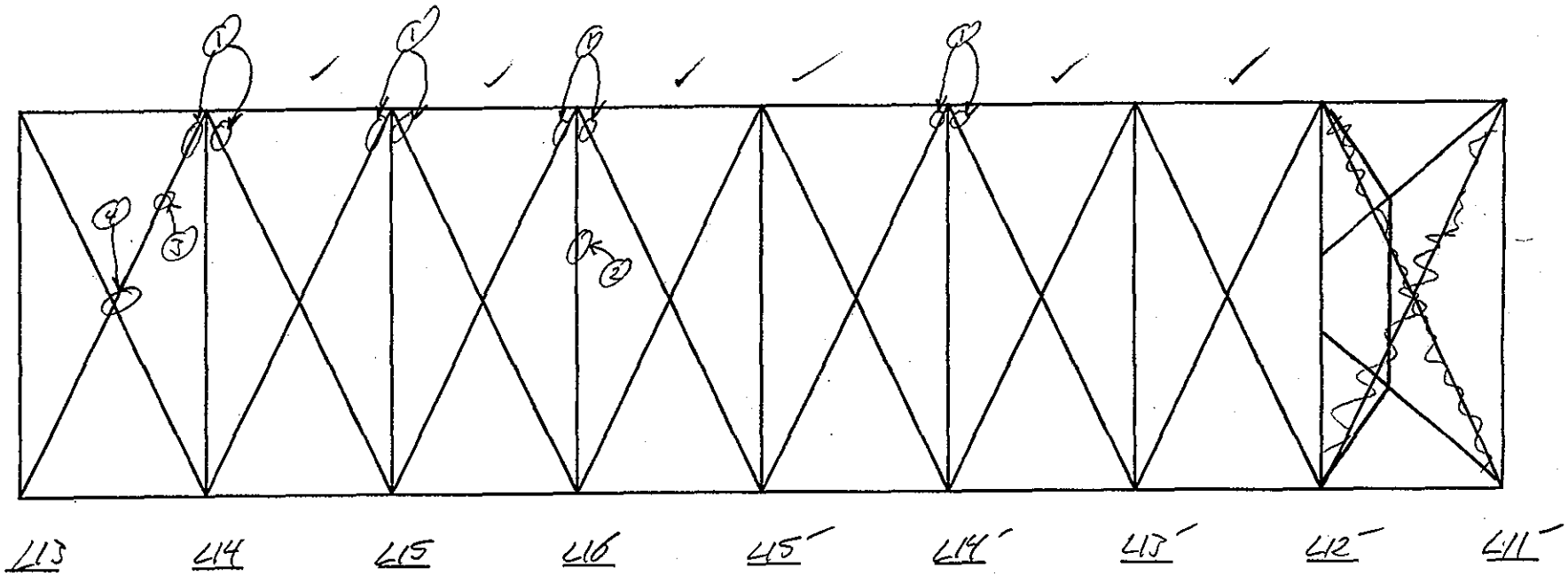

21
219

SPAN 1
LOWER CHORD BRACING

NOTES:
1) 1/4" IR between lower cord bracing diagonal flange & gusset plate.
2) 1/16" deep pitting × 5" ℓ on channel web, north face of lateral bracing. [B14-8]
3) 7/16" pitting ~ 2" ϕ on top flange angle at cross bracing member.
4) up to 7/16" pitting along top flange angle @ gusset plate (one angle only)

TRUSS BRACING	
DEPARTMENT OF THE ARMY NEW ENGLAND DIVISION CORPS OF ENGINEERS	
BOURNE HIGHWAY BRIDGE ROUTINE INSPECTION	
NOTES BY: LICHTENSTEIN CONSULTING ENGINEERS	
JOB #1784	DATE: 3/25/90
CREW: JA/EL	SHEET 3 OF 4

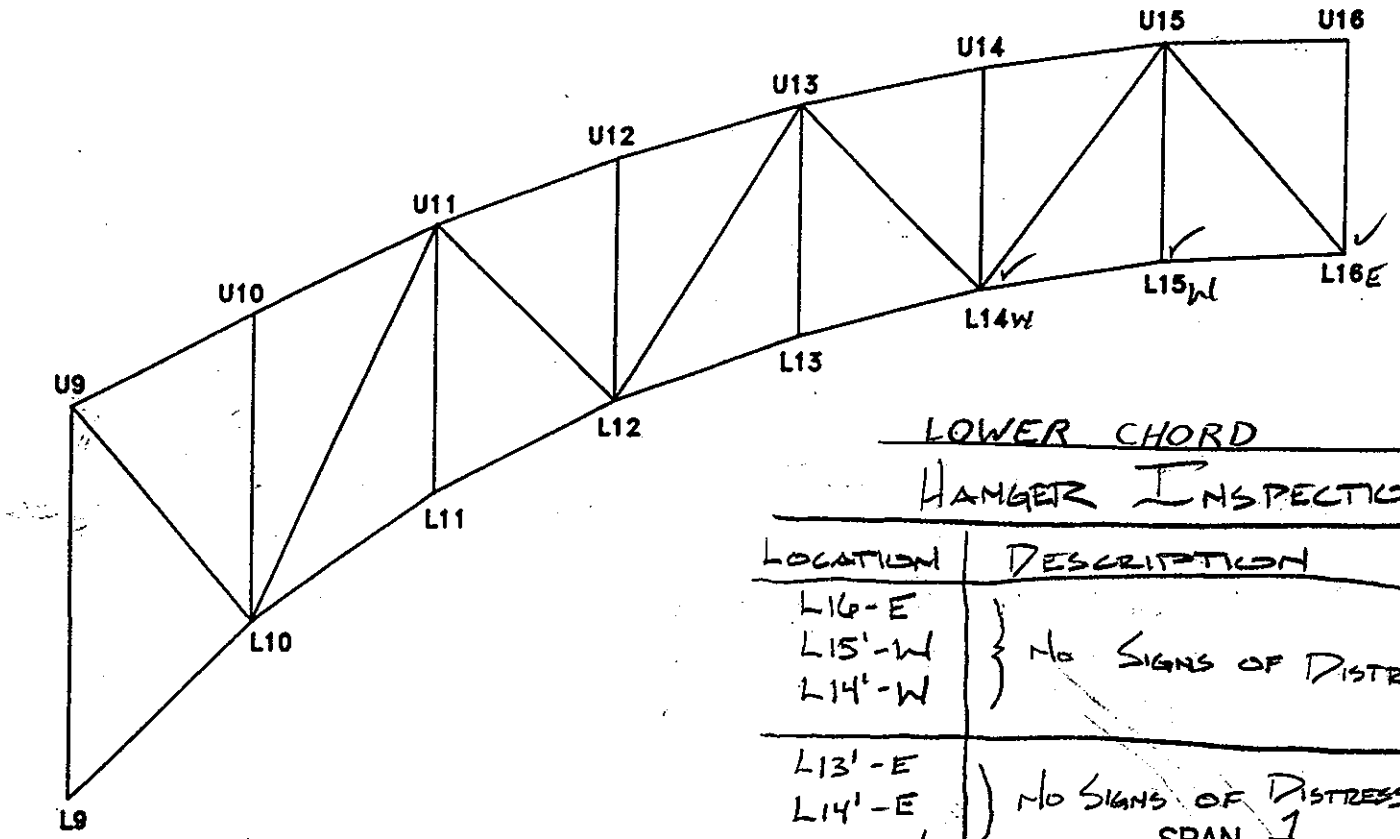

LOWER CHORD
HANGER INSPECTION

LOCATION	DESCRIPTION
L16-E L15'-W L14'-W	NO SIGNS OF DISTRESS 3/27/96
L13'-E L14'-E L14-W L15-W	NO SIGNS OF DISTRESS 3/28/96

SPAN 1

___ TRUSS ___ ELEVATION

NOTES:

TRUSS ELEVATION

DEPARTMENT OF THE ARMY
NEW ENGLAND DIVISION CORPS OF ENGINEERS

BOURNE HIGHWAY BRIDGE
ROUTINE INSPECTION

NOTES BY: LICHTENSTEIN
CONSULTING ENGINEERS

JOB #1784 | DATE: 3/27/96
CREW: W, TF, PH, EL | SHEET 1 OF 1

22
219

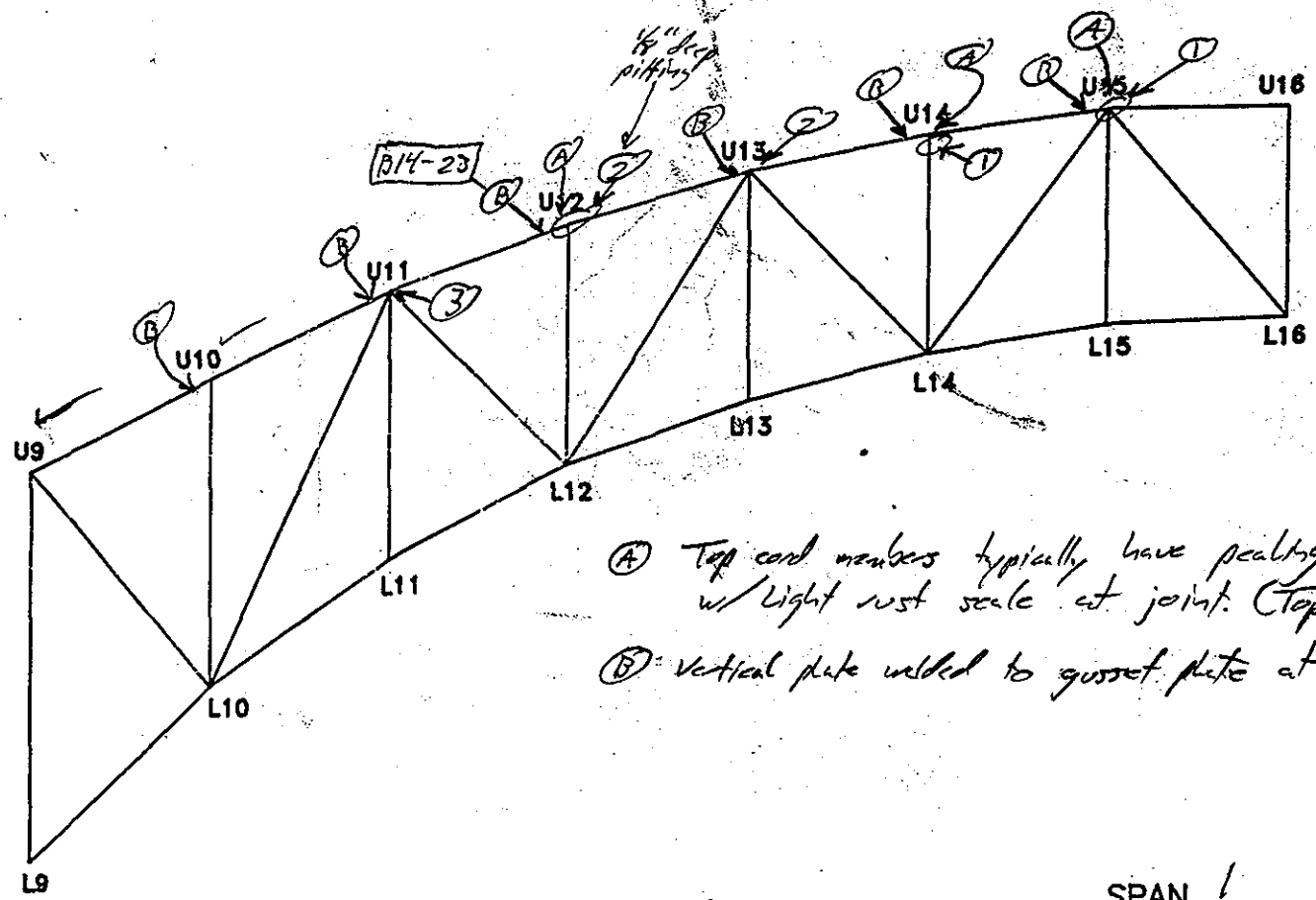

(A) Top cord members typically have peeling paint w/ light rust scale at joint. (Top cover plate)

(B) Vertical plate welded to gusset plate at joint (Top chord)

23
219

SPAN 1

W TRUSS E ELEVATION

NOTES:
1) 1/8" deep pitting on vertical gusset plate (2"L × 5"H) Centered at joint.
2) Random 1/16" pitting × 5"ϕ on vertical gusset plate. (East face)
3) 1/8" deep pitting on vertical gusset plate inside horizonal plates. Pitting exists 5"h × 50% length of plate. East face of truss.

TRUSS ELEVATION	
DEPARTMENT OF THE ARMY NEW ENGLAND DIVISION CORPS OF ENGINEERS	
BOURNE HIGHWAY BRIDGE ROUTINE INSPECTION	
NOTES BY: LICHTENSTEIN CONSULTING ENGINEERS	
JOB #1784	DATE: 3-26-96
CREW: JB/EL	SHEET 1 OF 3

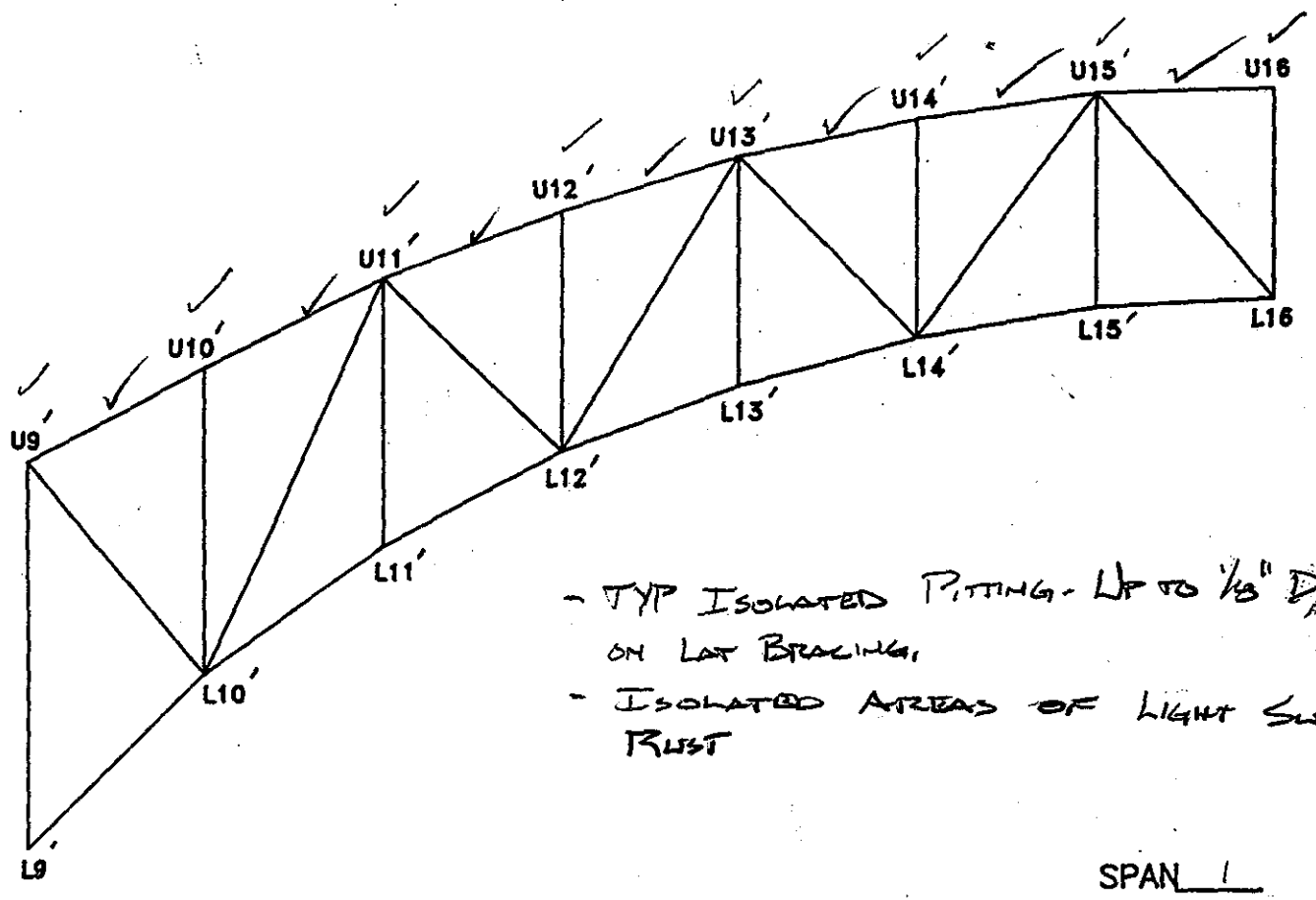

- TYP ISOLATED PITTING - UP TO 1/8" DEEP ON LAT BRACING.
- ISOLATED AREAS OF LIGHT SURFACE RUST

24
219

SPAN 1

W TRUSS W ELEVATION

NOTES: LADDER W/ CAGE WELDED TO L16-U16 (BROKEN WELD ON VERT. CAGE MEMBER)

TRUSS ELEVATION

DEPARTMENT OF THE ARMY
NEW ENGLAND DIVISION CORPS OF ENGINEERS

BOURNE HIGHWAY BRIDGE
ROUTINE INSPECTION

NOTES BY: LICHTENSTEIN CONSULTING ENGINEERS

JOB #1784 DATE: 3/26/96

CREW: TT W² SHEET 1 OF 3

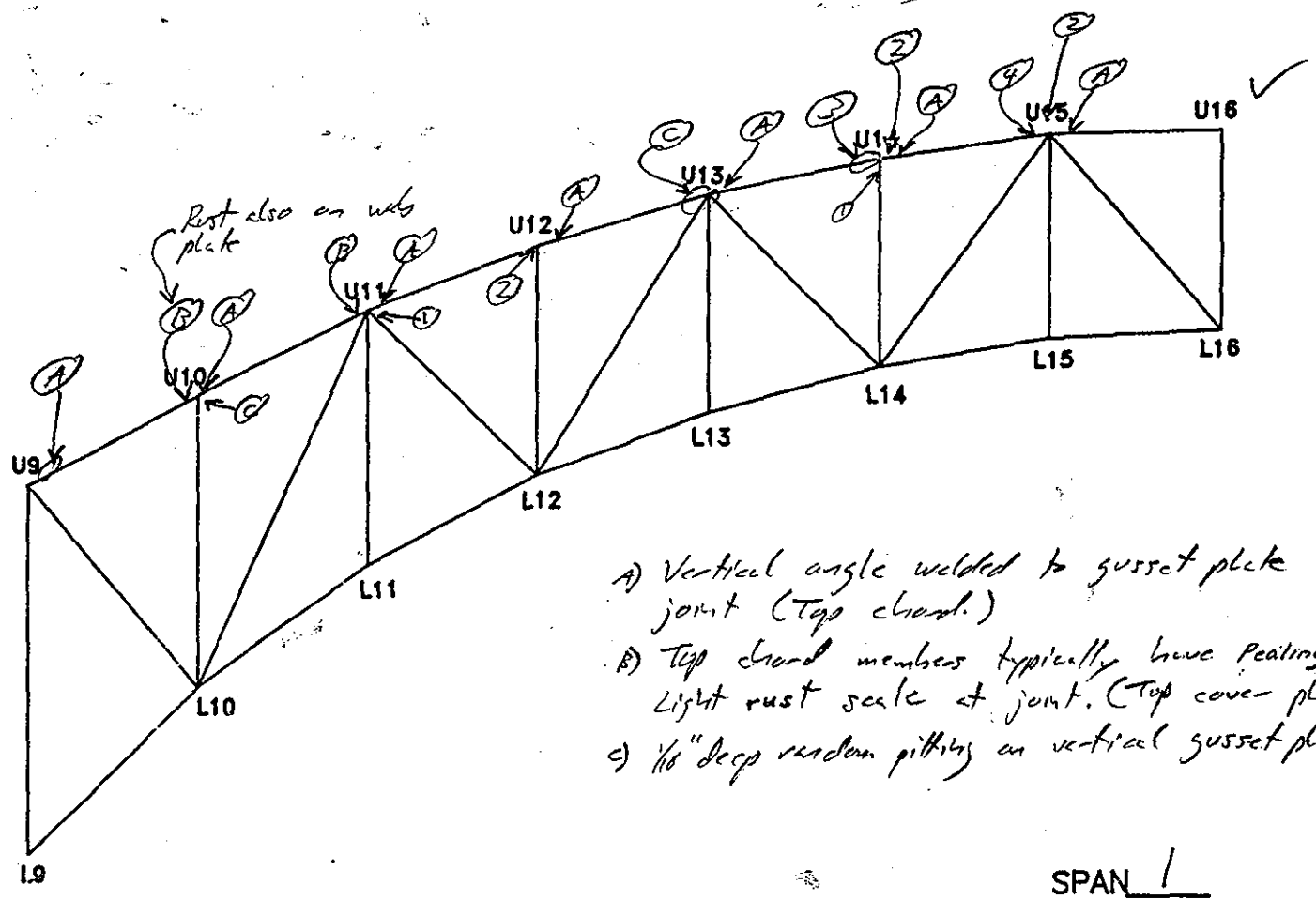

A) Vertical angle welded to gusset plate at joint (Top chord.)

B) Top chord members typically have peeling paint & light rust scale at joint. (Top cover plate.)

C) 1/16" deep random pitting on vertical gusset plate (≤5"φ)

SPAN 1

E TRUSS E ELEVATION

NOTES:
1) Up to 1/8" pitting on horizontal bracing gusset plate, bottom plate (≤2"φ)
2) 1/4" deep pitting on vertical gusset plate centered at joint (5"H × 18" long)
3) 1/16" deep random pitting × 4"φ on outside face of vertical gusset plate
4) Up to 1/8" deep pitting on top cord web cover plate along vertical gusset interface. (South side, west face)

TRUSS ELEVATION	
DEPARTMENT OF THE ARMY NEW ENGLAND DIVISION CORPS OF ENGINEERS	
BOURNE HIGHWAY BRIDGE ROUTINE INSPECTION	
NOTES BY: LICHTENSTEIN CONSULTING ENGINEERS	
JOB #1784	DATE: 3·26·96
CREW: JB, EL	SHEET 2 OF 3

25
219

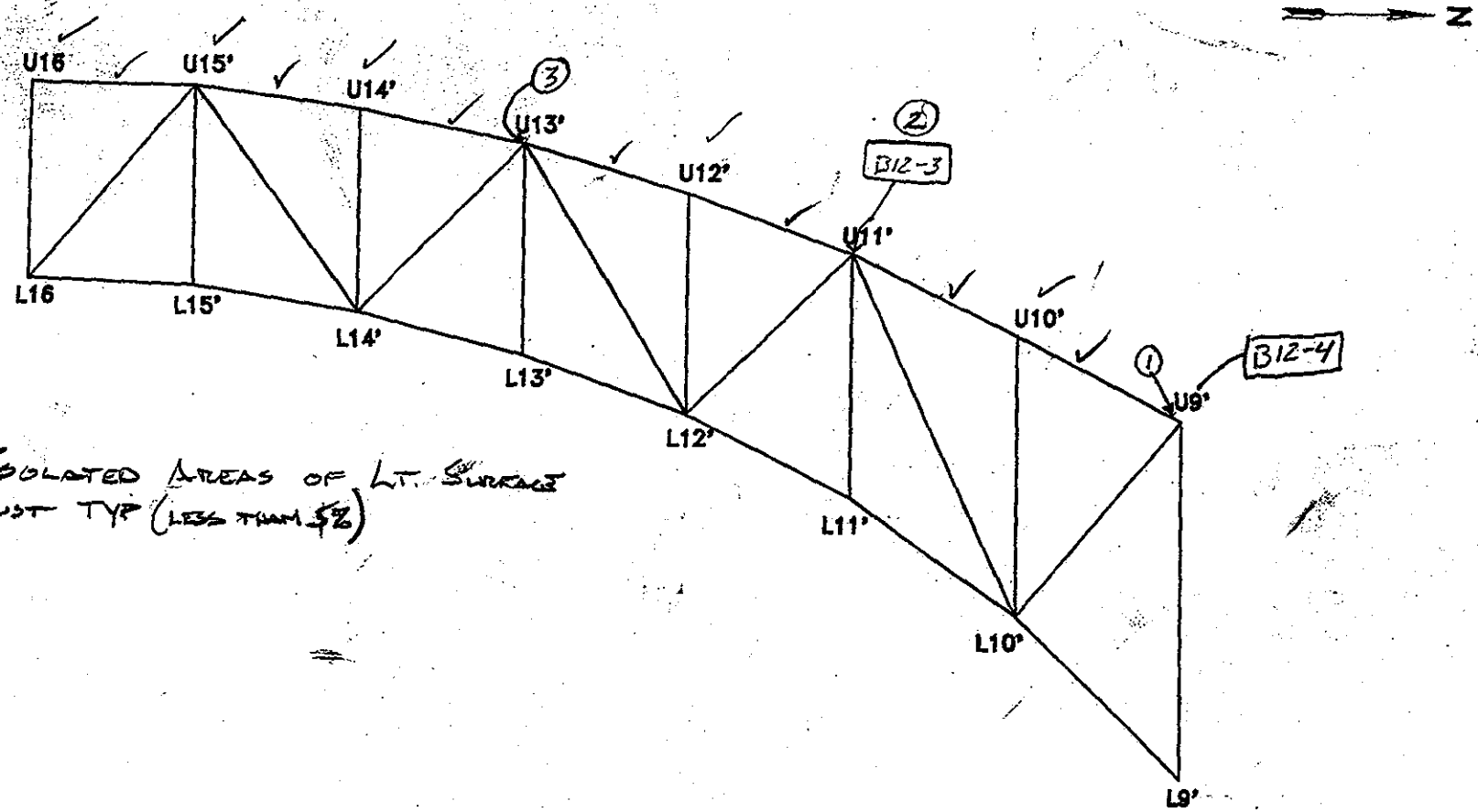

PAINT - ISOLATED AREAS OF LT. SURFACE RUST TYP (LESS THAN 5%)

26
219

SPAN 1

E TRUSS E ELEVATION

NOTES:
1. WELDED CONST. ∡ 1½x1½x7" LONG ON INTERIOR WEB FACE (TYP)
2. PAINT BUCKET BETWEEN LAT. BR. GUS. R'S
3. ½" COILED ROPE " " " " "

TRUSS ELEVATION

DEPARTMENT OF THE ARMY
NEW ENGLAND DIVISION CORPS OF ENGINEERS

BOURNE HIGHWAY BRIDGE
ROUTINE INSPECTION

NOTES BY: LICHTENSTEIN CONSULTING ENGINEERS

JOB #1784 | DATE: 3/26/96

CREW: TF, WE | SHEET 2 OF 3

General Note: up to 1/8" deep pitting x 2"φ on top chord bracing members. (Condition is typical for flange angles & lacing bars.)

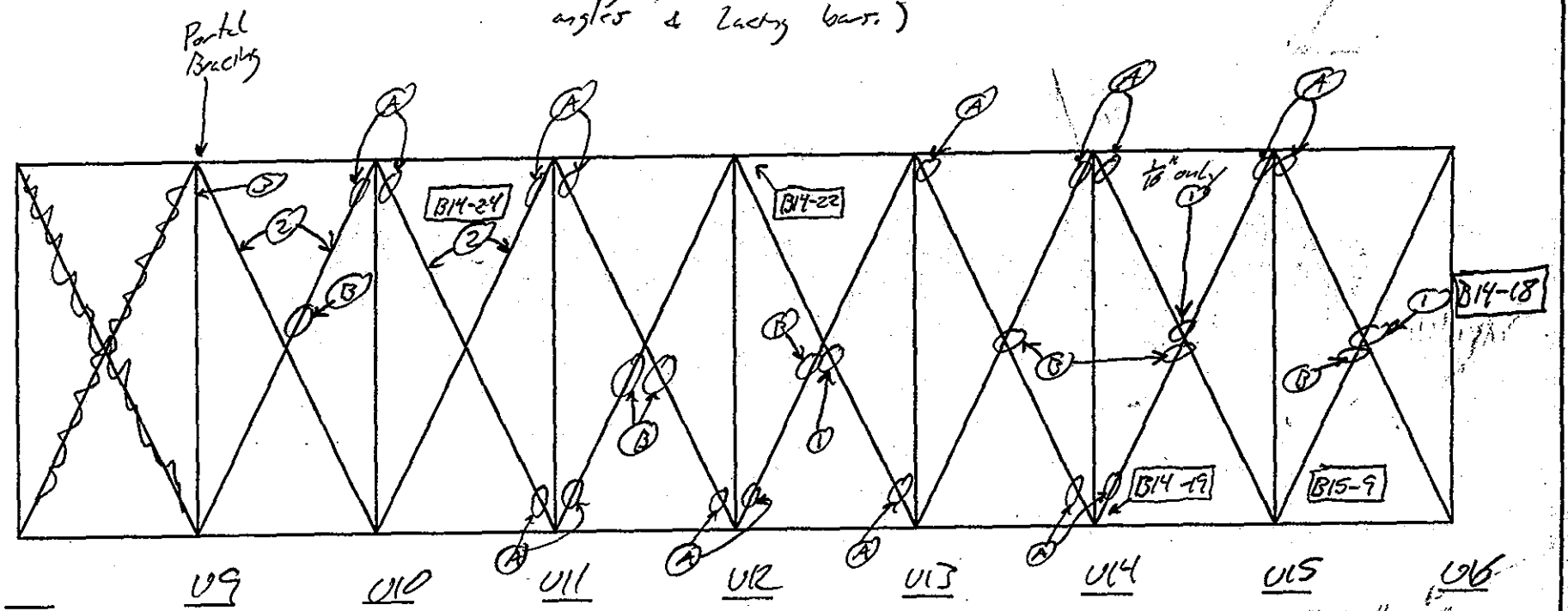

A) Up to 1/4" IR between horizontal gusset plate & diagonal bracing flanges.
B) Cross bracing intersection typically has peeling paint w/light rust scale on top flange. (This condition can be extended to up to 5% total surface area of bracing members.)

SPAN 1
UPPER CHORD BRACING

NOTES:
① 1/8" deep pitting on top flange angle @ gusset plate. (Along one flange only)
② welded cover plate (top & bottom) on bracing flanges.
③ 1/16" pitting on portal bracing web plate, north face along horizontal gusset plate (1" high x full length of horizontal gusset plate.)

1/16" pitting on bracing flange angles at gusset plate interface typical w/ IR.

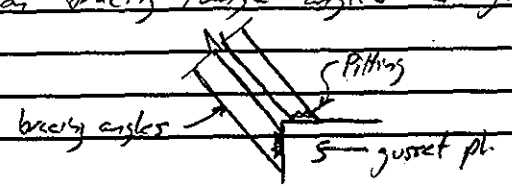

TRUSS BRACING	
DEPARTMENT OF THE ARMY NEW ENGLAND DIVISION CORPS OF ENGINEERS	
BOURNE HIGHWAY BRIDGE ROUTINE INSPECTION	
NOTES BY: LICHTENSTEIN CONSULTING ENGINEERS	
JOB #1784	DATE: 3·26·96
CREW: JB, EL	SHEET 3 OF 3

TYPICAL NOTE: UP TO ½" (IR) BETWEEN LAT. BR. & GUS. ℞'s

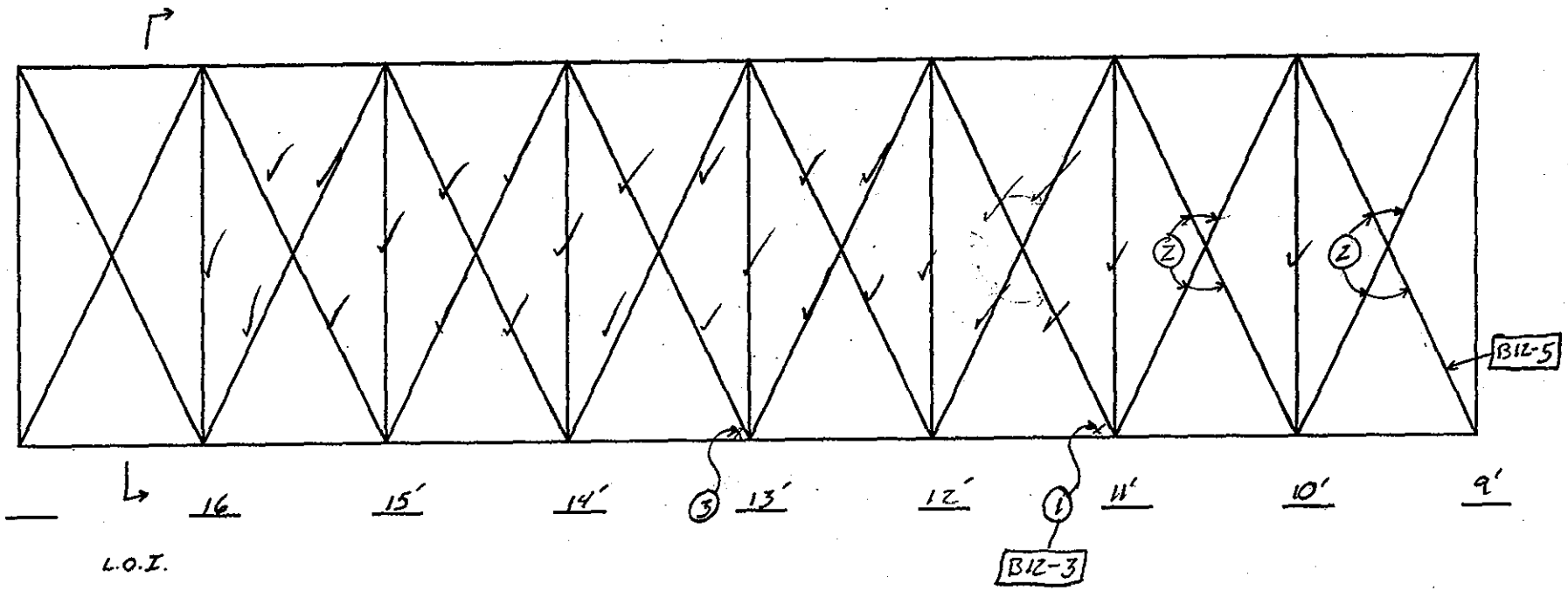

28
219

SPAN 1

UPPER CHORD BRACING

NOTES:

1. PAINTERS BUCKET BETWEEN LAT. BR. GUS. ℞'s
2. COV. ℞ ON TOB & BTM, LAT BR DIAG.'s
3. ½" COILED ROPE BETWEEN LAT. BR. GUS. ℞'s.

TRUSS BRACING	
DEPARTMENT OF THE ARMY NEW ENGLAND DIVISION CORPS OF ENGINEERS	
BOURNE HIGHWAY BRIDGE ROUTINE INSPECTION	
NOTES BY: LICHTENSTEIN CONSULTING ENGINEERS	
JOB #1784	DATE: 3/26/96
CREW: TF, WL	SHEET 3 OF 3

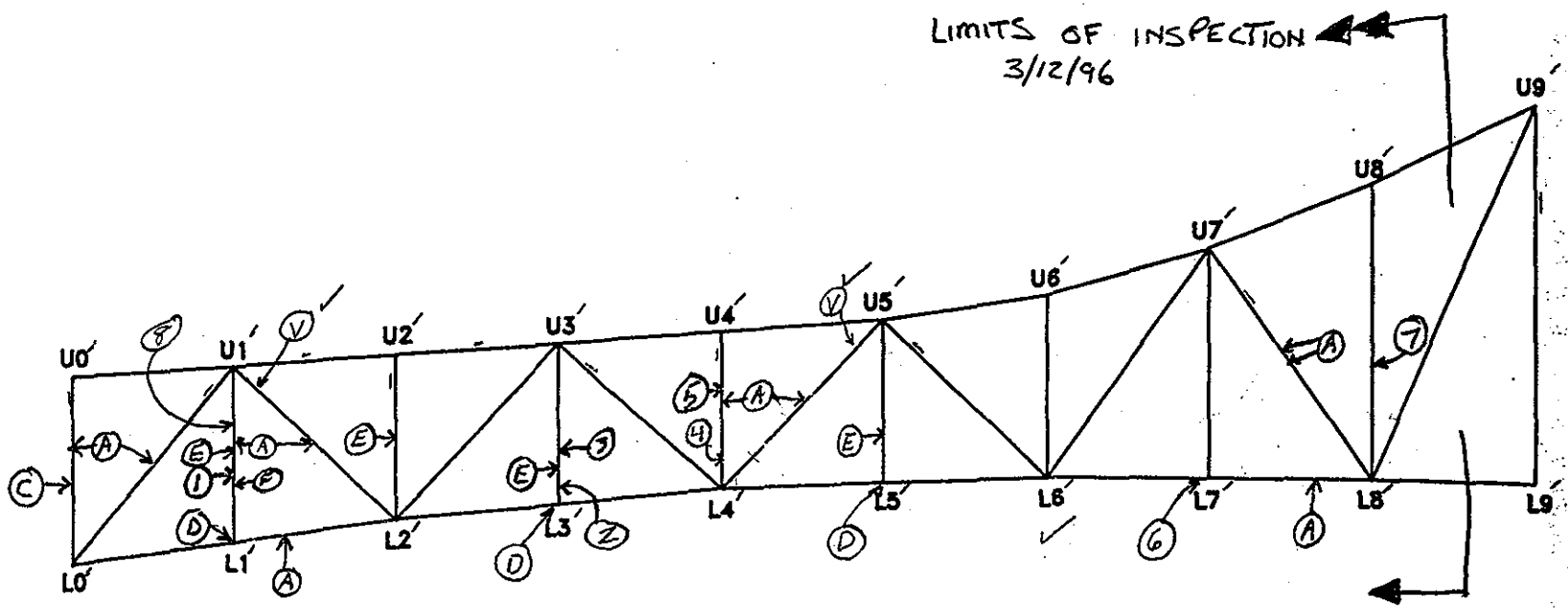

(A) WELDED DRAIN SUPR BRKT.
(B) UP TO 1/4" (TR) BETWEEN SIDE PL & MEMBER CHANNEL (FULL LENGTH)
(C) UP TO 1/8" PITT, E. FACE OF MEMBER, (UP TO 5% AREA)
(D) UP TO 1/4" PITT x 1/2" W, INBOARD FACE OF GUS PL'S ALONG VERT. MEMBER CHANNEL EDGES.
(E) UP TO 1/8" PITT, INBOARD FACE, E. MEMBER CHANNEL (UP TO 5% AREA)
(F) " " , " " , W. " " "

LEGEND:
(V) INDICATES VISUAL INSPECTION

SPAN 2

W TRUSS W ELEVATION

NOTES: (1) 3/16" PITT 5%, BOTH FACES, E. MEMBER CHANNEL.
(2) 1/4" PITT x 5" W x 1" H, E. FACE OF E. MEM. CHAN., ALONG TOP OF GUS. PL
(3) 3/16" PITT x 10" Ø " " "
(4) BENT LACING (BOWED OUT 1/4"), END CONN. PL NOT BOWED.
(5) 75% OF RIVET'S HAVE BEEN REPLACED W/ BOLTS
(6) 3/16" PITT x 4" Ø, E. FACE, E. GUS PL
(7) UP TO 1/4" (TR) BET. VERT. PL'S AND WEB PL'S
JG (3/22/96) (8) 1/8" pitting on interior channel web x 6" wide cross section.

TRUSS ELEVATION	
DEPARTMENT OF THE ARMY NEW ENGLAND DIVISION CORPS OF ENGINEERS	
BOURNE HIGHWAY BRIDGE ROUTINE INSPECTION	
NOTES BY: LICHTENSTEIN CONSULTING ENGINEERS	
JOB #1784	DATE: 3/12
CREW: TF, PWN	SHEET 3 OF 5

29
219

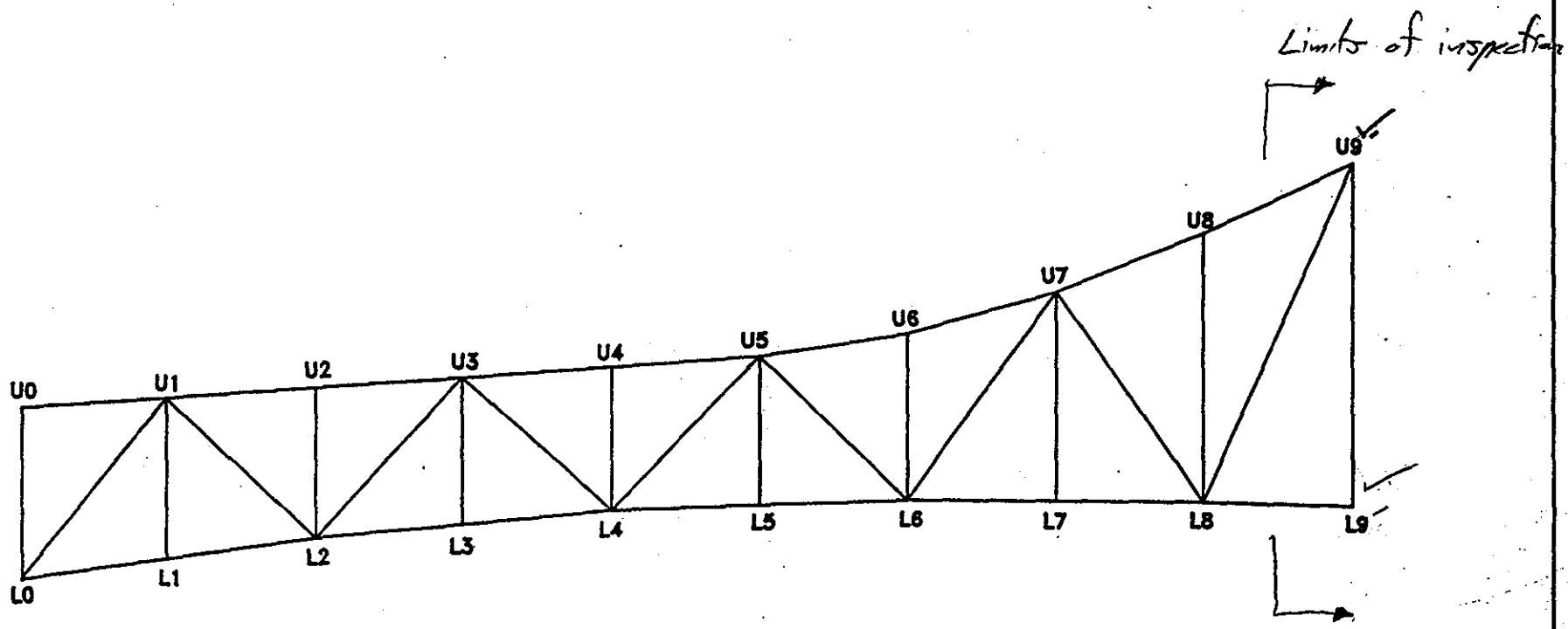

SPAN 2

W TRUSS W ELEVATION

NOTES:

TRUSS ELEVATION	
DEPARTMENT OF THE ARMY NEW ENGLAND DIVISION CORPS OF ENGINEERS	
BOURNE HIGHWAY BRIDGE ROUTINE INSPECTION	
NOTES BY: LICHTENSTEIN CONSULTING ENGINEERS	
JOB #1784	DATE: 3/13/96
CREW: JB, PWN, SD	SHEET 1 OF 3

(9) 3-1/4" x 4" φ pitting, inside face of east channel.

(10) 1/8" pitting, 3'x3' inside face of east gusset plate

JB (3/22/96) (11) Up to 7/16" pitting for 8" widths at top of vertical, west face of channel web.

(12) Up to 7/16" pitting for half of channel web width, west face.

General Note: Stiffener plates of verticals & diagonals at panel points exhibit 1/8" pitting over 10% of its surface area.

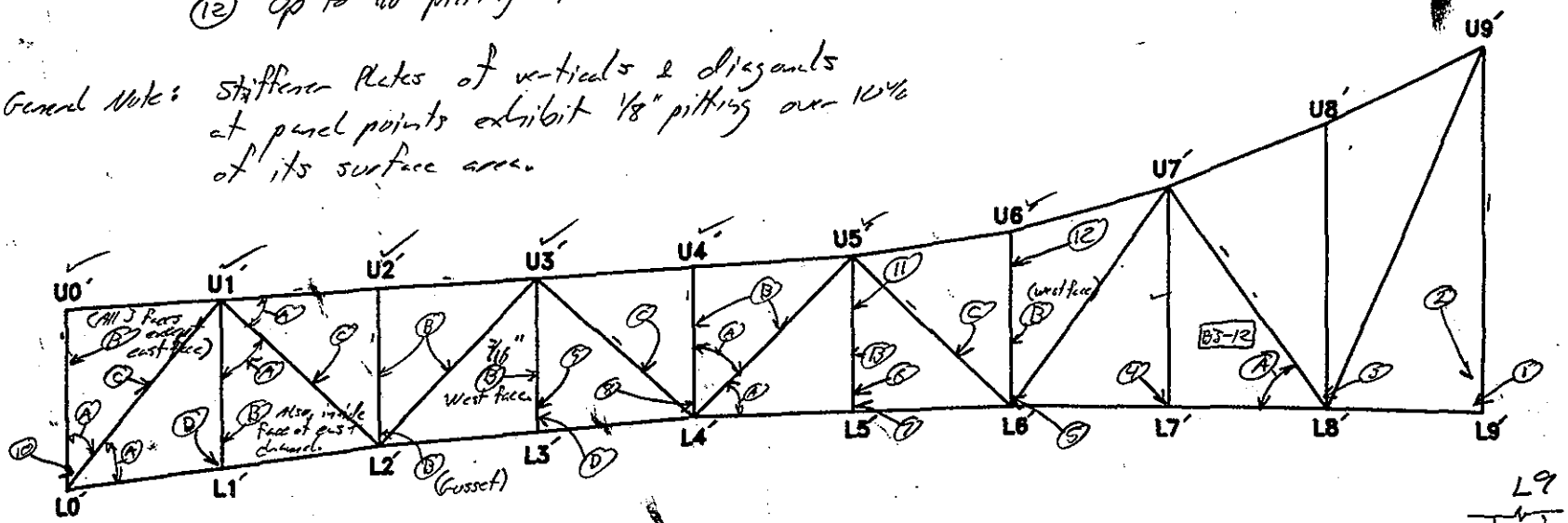

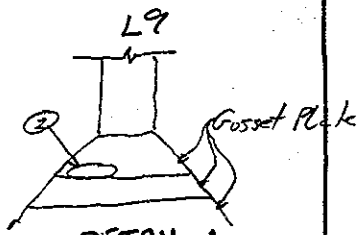

DETAIL 1

(A) Downspout bracket welded to member

(B) 1/8" pitting ≤ 5% of surface area of member

(C) 1/4" (IR) between flange angles and cover plates, full length.

(D) 1/4" x 1/2" wide pitting, inside face gusset plates along edges of vertical channels

SPAN 2

E TRUSS W ELEVATION

NOTES: (1) 1 in² Area of 100% section loss on lower gusset plate of lower cord of wind bracing member. Area surrounding section loss has rust & peeling paint. → LATERAL GUSSET PL

(2) 7/16" pitting, 6" w x 1 1/2" ht on west gusset plate interface (SEE DETAIL 1)

(3) 7/8" (IR) by 8" L between west upper flange angle & end cover plate

(4) See attached!

(5) Up to 10% of surface area of gusset plate has 1/8" pitting

(6) 7/16" pitting, inside face, east channel ≤ 5% of surface area.

(7) 2-1/8" x 4" φ pitting on west gusset plate

(8) 2" wide x 1" high area of 100% section loss on lower portion of end cover plate, north face of vertical.

TRUSS ELEVATION	
DEPARTMENT OF THE ARMY NEW ENGLAND DIVISION CORPS OF ENGINEERS	
BOURNE HIGHWAY BRIDGE ROUTINE INSPECTION	
NOTES BY: LICHTENSTEIN CONSULTING ENGINEERS	
JOB #1784	DATE: 3/13/96
CREW: JB, PWN, SD	SHEET 2 OF 3

31
219

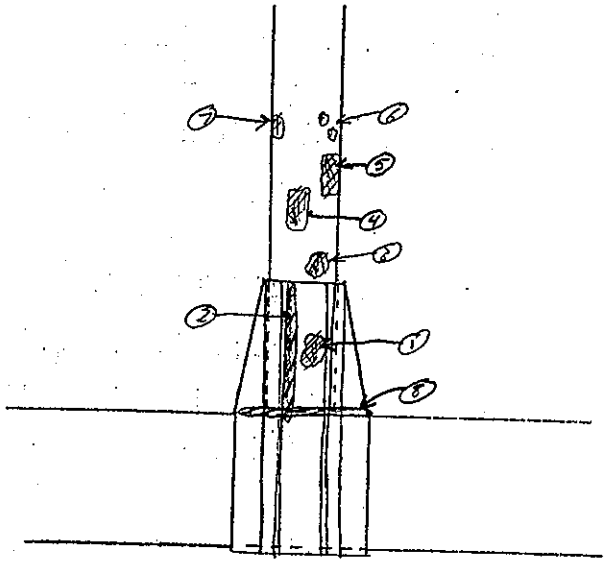

L7' (West Elev.) East Truss, Span 2

BJ-13

Corr. Area at 1/8" Pitting, 6"ϕ East gusset plate

① 3/16" Pitting, 4"ϕ

② 3/16" Pitting × 1" × 15"

③ 1/8" Pitting, 4"ϕ

④ 1/8" Pitting × 5" × 11"

⑤ 1/4" Pitting × 5' × 5" } Above
3/16" Pitting × 4" × 4"

⑥ 2 - 1/4" Pitting × 1"ϕ

⑦ 3/16" Pitting, 4" × 3"

⑧ 1/8" Pitting, 1" × Full length, inside

DEPARTMENT OF THE ARMY NEW ENGLAND DIVISION CORPS OF ENGINEERS	
BOURNE HIGHWAY BRIDGE ROUTINE INSPECTION	
NOTES BY: LICHTENSTEIN CONSULTING ENGINEERS	
JOB #1784	DATE: 3/13/96
CREW: JB, RWM, SD	SHEET 3 OF 3

TYPICAL – UP TO 1/8" PITT ON UP TO 10% TOP FL. OF BRACE MEMBERS.
& TOPS OF BOTTOM FLANGES OF BRACING MEMBERS
W/ ISOLATED LOCATIONS OF 1/8" PITTING ON
MEMBER LACING

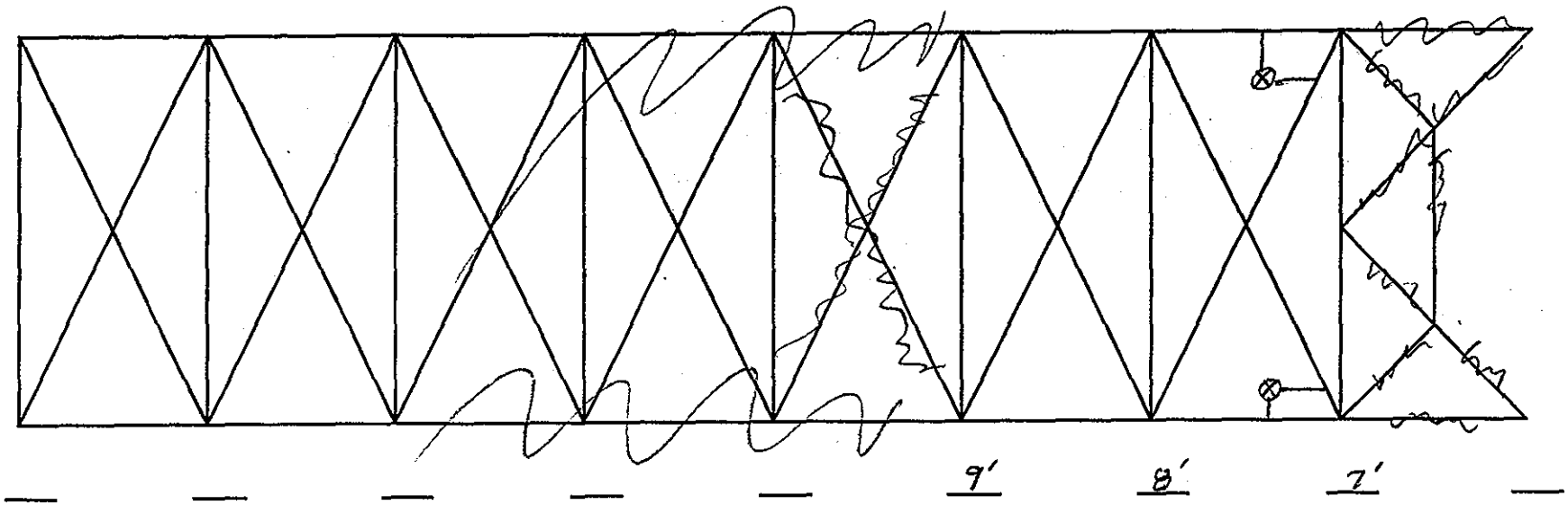

LEGEND

⊗ – DRAIN W/ WELDED SUPP ∡'s

SPAN 2

LOWER CHORD BRACING

NOTES:

TRUSS BRACING	
DEPARTMENT OF THE ARMY NEW ENGLAND DIVISION CORPS OF ENGINEERS	
BOURNE HIGHWAY BRIDGE ROUTINE INSPECTION	
NOTES BY: LICHTENSTEIN CONSULTING ENGINEERS	
JOB #1784	DATE: 3/12
CREW: TF, PWN	SHEET 5 OF 5

33
219

TYPICAL - UP TO 1/8" PITT ON UP TO 10% TOP FLANGE OF BRACE MEMBERS.
& TOP OF BOTTOM FLANGES OF BRACING MEMBERS
W/ ISOLATED LOCATIONS OF UP TO 1/8" PITTING ON
MEMBER LACING

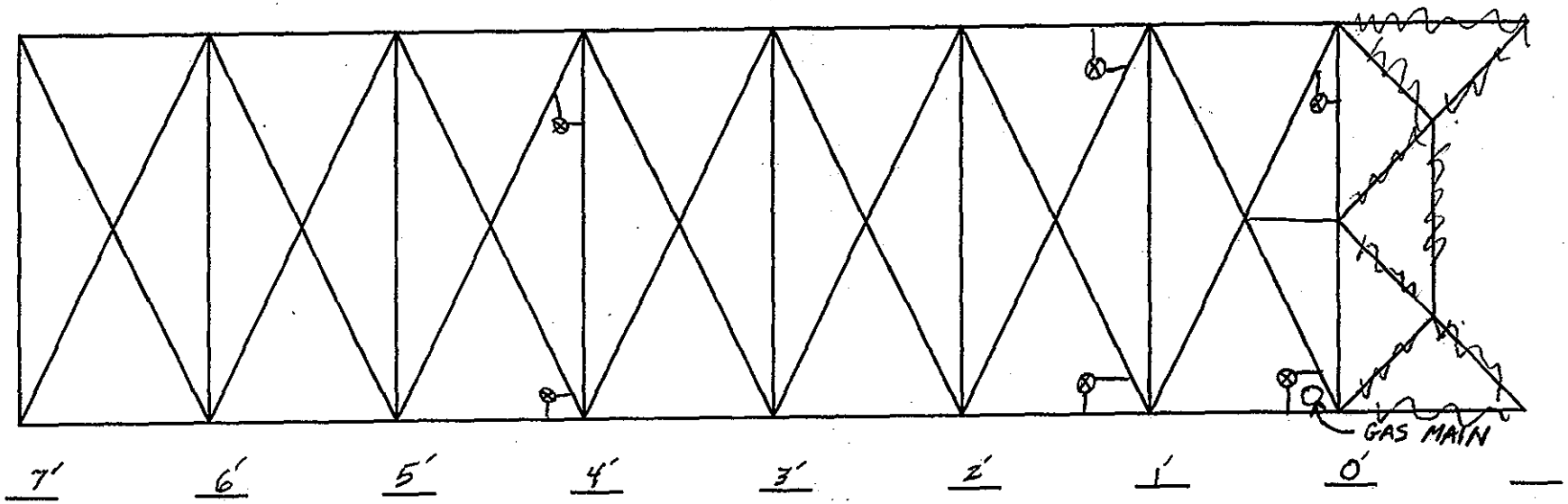

LEGEND
⊗ DRAIN W/ WELDED SUPP. ∠'S

SPAN 2
LOWER CHORD BRACING

NOTES:

TRUSS BRACING	
DEPARTMENT OF THE ARMY NEW ENGLAND DIVISION CORPS OF ENGINEERS	
BOURNE HIGHWAY BRIDGE ROUTINE INSPECTION	
NOTES BY: LICHTENSTEIN CONSULTING ENGINEERS	
JOB #1784	DATE: 7/12/96
CREW: TF, MW	SHEET 4 OF 5

34
219

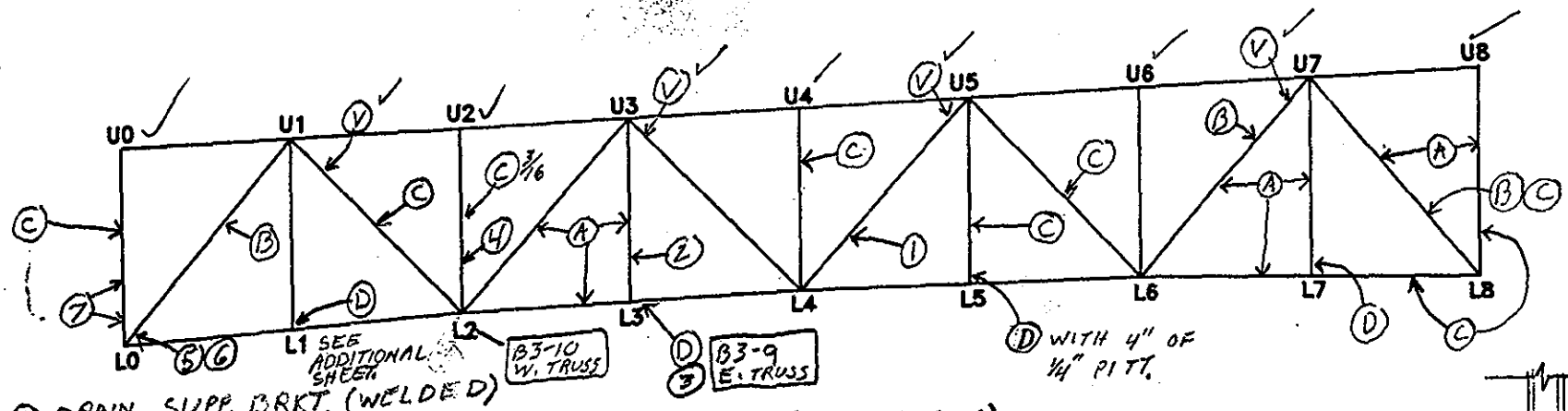

(A) DRAIN SUPP. BRKT. (WELDED)
(B) UP TO 1/4" (IR) BETWEEN SIDE & MEMBER CHANNEL (FULL LENGTH)
(C) UP TO 1/8" PITT E. FACE OF MEMBER (UP TO 10% AREA)
(D) 1/8" PITT x 1/2" W, ~~x FULL~~ H., INBOARD FACE OF GUS. ℞'S ALONG VERT. CHANNEL MEMBER EDGES

35
219

GENERAL NOTE: up to 3/16" pitting located on bottom of bottom flange of lower cord truss members. Max. condition has pitting up to 1/2 width of flange, adjacent to lacing bars.
(JB - 7/22/96)

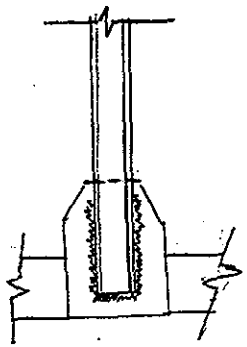

SKETCH NOTE (D)

SPAN 4

W TRUSS E ELEVATION

LEGEND:
(V) INDICATES ——→ VISUAL INSPECTION

NOTES: ~~(4) 1/4" PITT x 1/2" W, INBOARD FACE OF GUS ℞'S ALONG VERT. CHANNEL MEMBER EDGES~~
(1) UP TO 3/16" PITT ON 5%, INBOARD FACES OF MEMBER
(2) 1/8" PITT UP TO 5% AREA INBOARD FACES
(3) 1/8" PITT, ON 20% AREA, E. FACE, W. VERT GUS ℞
(4) 2 PATCHES OF PITT, 3/16 x 4" Ø, INBOARD FACE, W. MEMBER.
(5) 1/8" PITT x 5" Ø, E. FACE, E. GUS. ℞
(6) 1/4" PITT x 4" Ø, " , W. GUS. ℞
(7) 3/16" PITT. 50% SURF., FULL WIDTH, LOWER 1/2 OF MEMBER (E. FACE, W. CHANNEL)

TRUSS ELEVATION	
DEPARTMENT OF THE ARMY NEW ENGLAND DIVISION CORPS OF ENGINEERS	
BOURNE HIGHWAY BRIDGE ROUTINE INSPECTION	
NOTES BY: LICHTENSTEIN CONSULTING ENGINEERS	
JOB #1784	DATE: 3/12
CREW: TF, PWN	SHEET 1 OF 5

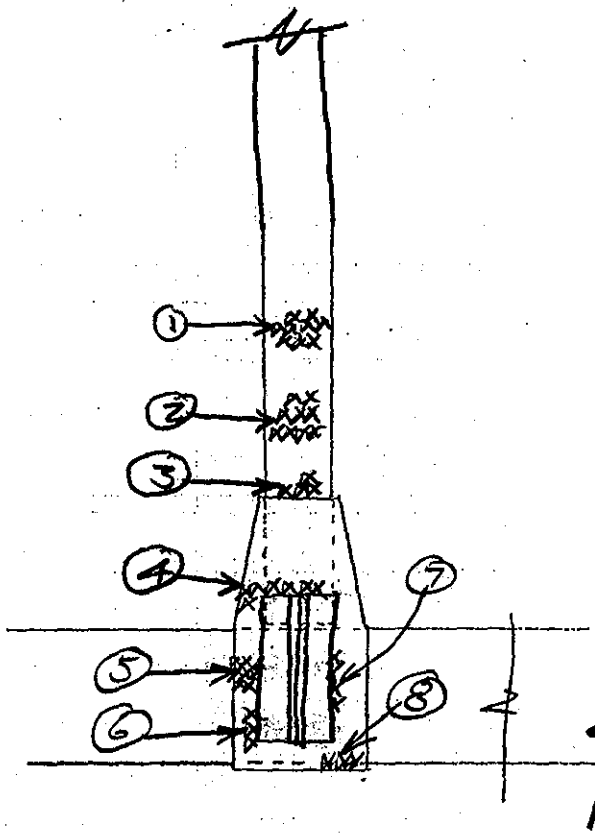

E. ELEV. L1
WEST TRUSS
SPAN 4

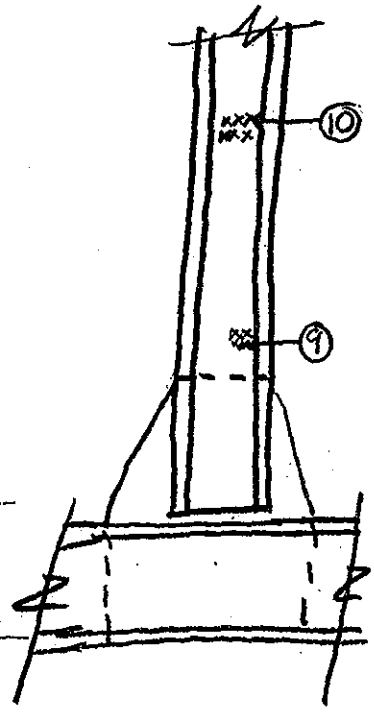

SECTION THRU
L1 WEST TRUSS
SPAN 4, LOOKING
AT E. GUSSET ℞

⑨ 3/16" x 2"Ø PITT

⑩ 1/4" x 8"W x 6"H PITT
(W. CHANNEL HAS 3/16 X 5"Ø @
SAME ELEVATION)

① 3/16" x 14"Ø PITT

② 1/8" x 14"Ø PITT

③ 3/16" x 7" WIDE x 2" HIGH PITT.

④ 3/16" x 9" WIDE x 1" HIGH PITT.

⑤ 1/8" x 5"Ø PITT

⑥ 3/16" x 1" WIDE x 3" HIGH PITT.

⑦ 1/8" x 1" W x 6" HIGH PITT.

⑧ 1/4" x 3" W x 2" H. PITT.

DEPARTMENT OF THE ARMY NEW ENGLAND DIVISION CORPS OF ENGINEERS	
BOURNE HIGHWAY BRIDGE ROUTINE INSPECTION	
NOTES BY: LICHTENSTEIN CONSULTING ENGINEERS	
JOB #1784	DATE: 3/12/96
CREW: PWH TF	SHEET 2 OF 5

TYPICAL - INSIDE FACES OF ALL VERT. & DIAG MEMBER CHANNELS EXHIBIT UP TO 1/8" PITT UP TO 10% OF SURF.

N →

(9) UP TO 1/4" IR W. FACE E. GUS. & S. LEG, VERT CHANNEL. 6" H.

(10) UP TO 3/16" PITT W. FACE, W. DIAG. 10% SURFACE.

(14) UP TO 1/4" IR BET. W. CHANNEL & COV. PL.

(15) 1/8" (IR) x 10"L BET OUTER E. GUS. & MAIN GUS.

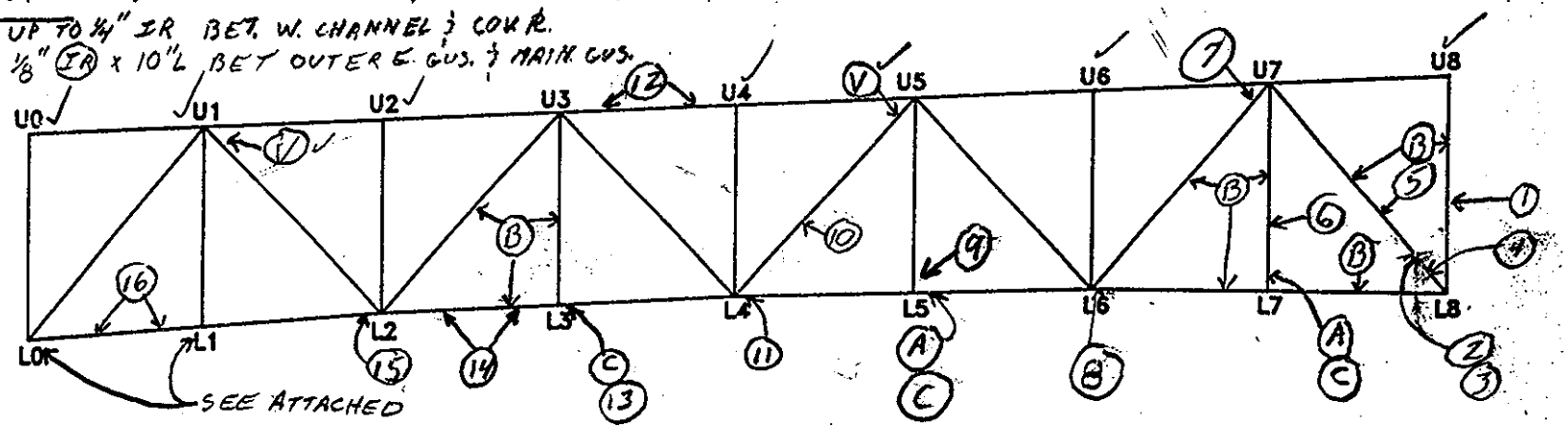

TYP. COND.'S

(A) 1/8" PITT x 1/2" W. WEST FACE. W. GUS. PL AROUND PERIMITER EDGE OF CONNECT ∡'S TO BRACING MEMBER.

(B) WELDED DRAIN SUPPORT ∡

(C) UP TO 1/8" PITT UP TO 1" HIGH INBOARD FACES OF GUS. PL'S ALONG TOP OF LOWER CHORD.

(16) 1/8" PITT, 15% SURF. AREA, W. FACE, W. CHANNEL.

(11) UP TO 3/16" PITT COVERING 25% SURF AREA, W. FACE, OF VERT. GUS. STIFF. ∡

(12) 1/4" (IR) BETWEEN TOP COV. PL & E. CHANNEL, FULL LENGTH.

(13) 1/8" PITT, 50% SURF, W. FACE, W. GUS PL.

NOTES: (1) 5% SURF. AREA PITT 1/8" BOTH INTERIOR CHANNELS FACES.

(2) UP TO 1/4" IR 42"L BETWEEN W. DIAG. CHANNEL & COV. PL.

(3) UP TO 1/4" PITT 8" Ø W. GUS. PL

(4) " " " 5" Ø " "

(5) 2 PATCHES OF PITT, 1/4" x 4" Ø W. GUS. PL

(6) 1/8" PITT x 1'-0" W x 3'-0" H, W. FACE W. VERT.

(7) (AD) BET. W. GUS. & FB 7 CONN. ∠ → LIGHT (AD)

(8) UP TO 3/16" PITT ON VERT. GUS. PL STIFFNER 1" W x FULL H ALLONG S. FACE CONNECT. ∡'S

SPAN 4

E TRUSS E ELEVATION

TRUSS ELEVATION	
DEPARTMENT OF THE ARMY NEW ENGLAND DIVISION CORPS OF ENGINEERS	
BOURNE HIGHWAY BRIDGE ROUTINE INSPECTION	
NOTES BY: LICHTENSTEIN CONSULTING ENGINEERS	
JOB #1784	DATE: 3/11/96
CREW: TF, PWN	SHEET 1 OF 5

37
219

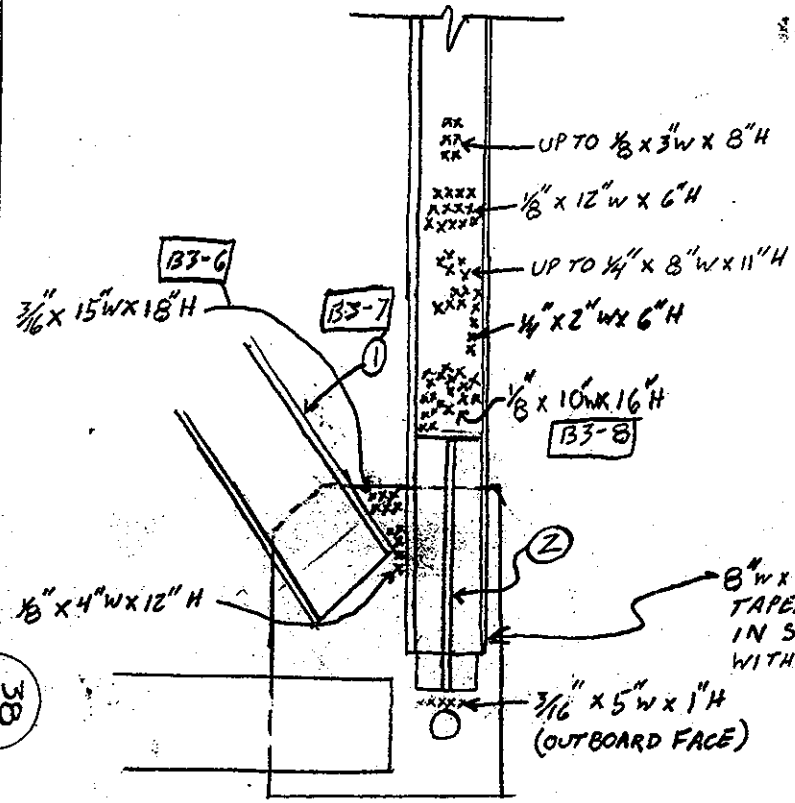

SECTION THRU. LO
W. FACE, E. GUS PL
E. TRUSS
SPAN 4

LEGEND:
XX - PITT.

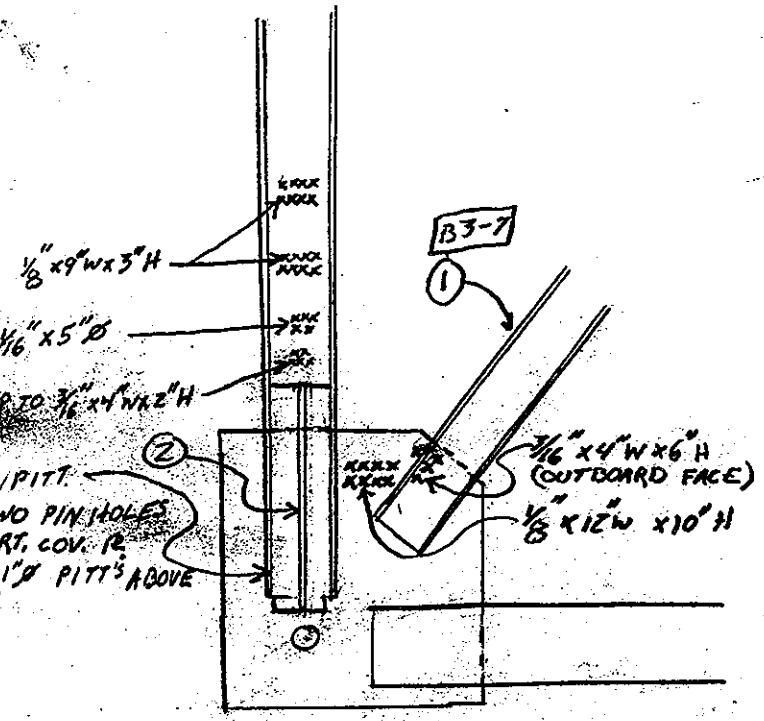

SECTION THRU LO
E. FACE, W. GUS PL
E. TRUSS
SPAN 4

LEGEND
XXX - PITT.

38
219

NOTES: (1) 1/4" (IR) BET. CHANNEL & SIDE COV. PL.
(2) VERT. STIFF. PL @ LO HAS 3/16" PITT ON 25% SURF.

DEPARTMENT OF THE ARMY NEW ENGLAND DIVISION CORPS OF ENGINEERS	
BOURNE HIGHWAY BRIDGE ROUTINE INSPECTION	
NOTES BY: LICHTENSTEIN CONSULTING ENGINEERS	
JOB #1784	DATE: 3/11
CREW: TF, PWM	SHEET 5 OF 5

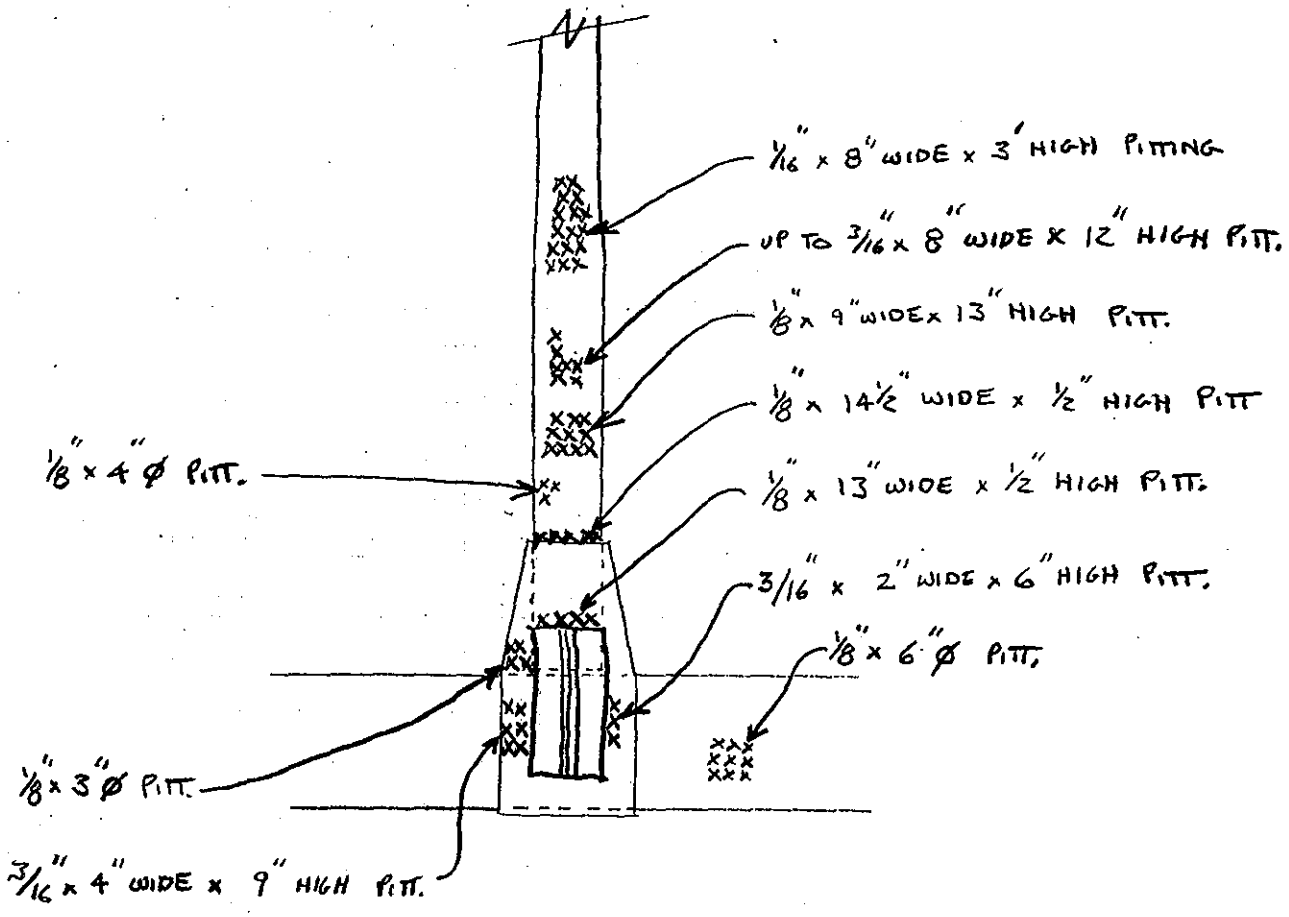

E. TRUSS
L 1
WEST ELEV.
B3-4

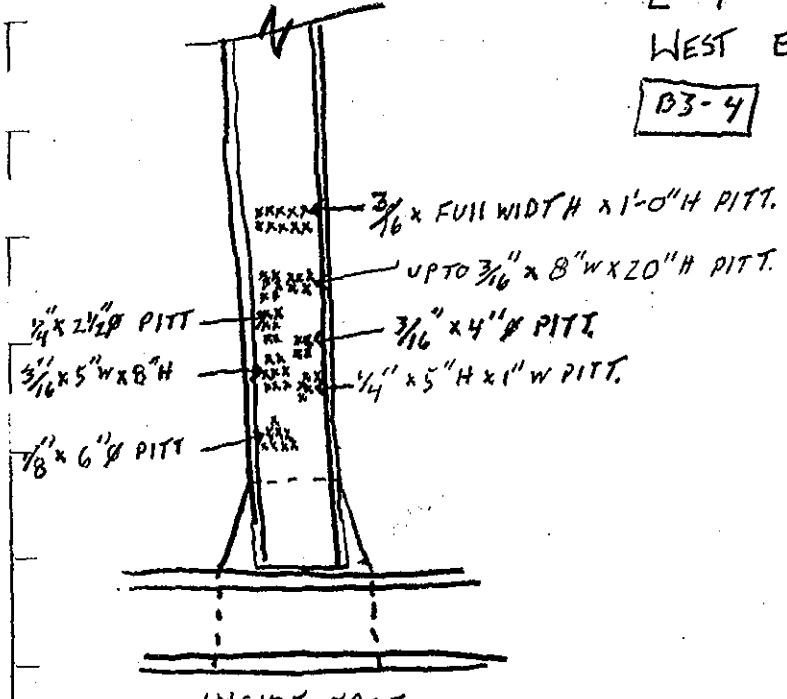

INSIDE FACE
E. VERT. L1
B3-3

SPAN 4

DEPARTMENT OF THE ARMY NEW ENGLAND DIVISION CORPS OF ENGINEERS	
BOURNE HIGHWAY BRIDGE ROUTINE INSPECTION	
NOTES BY: LICHTENSTEIN CONSULTING ENGINEERS	
JOB #1784	DATE: 3/11
CREW: TF, PWN	SHEET 4 OF 5

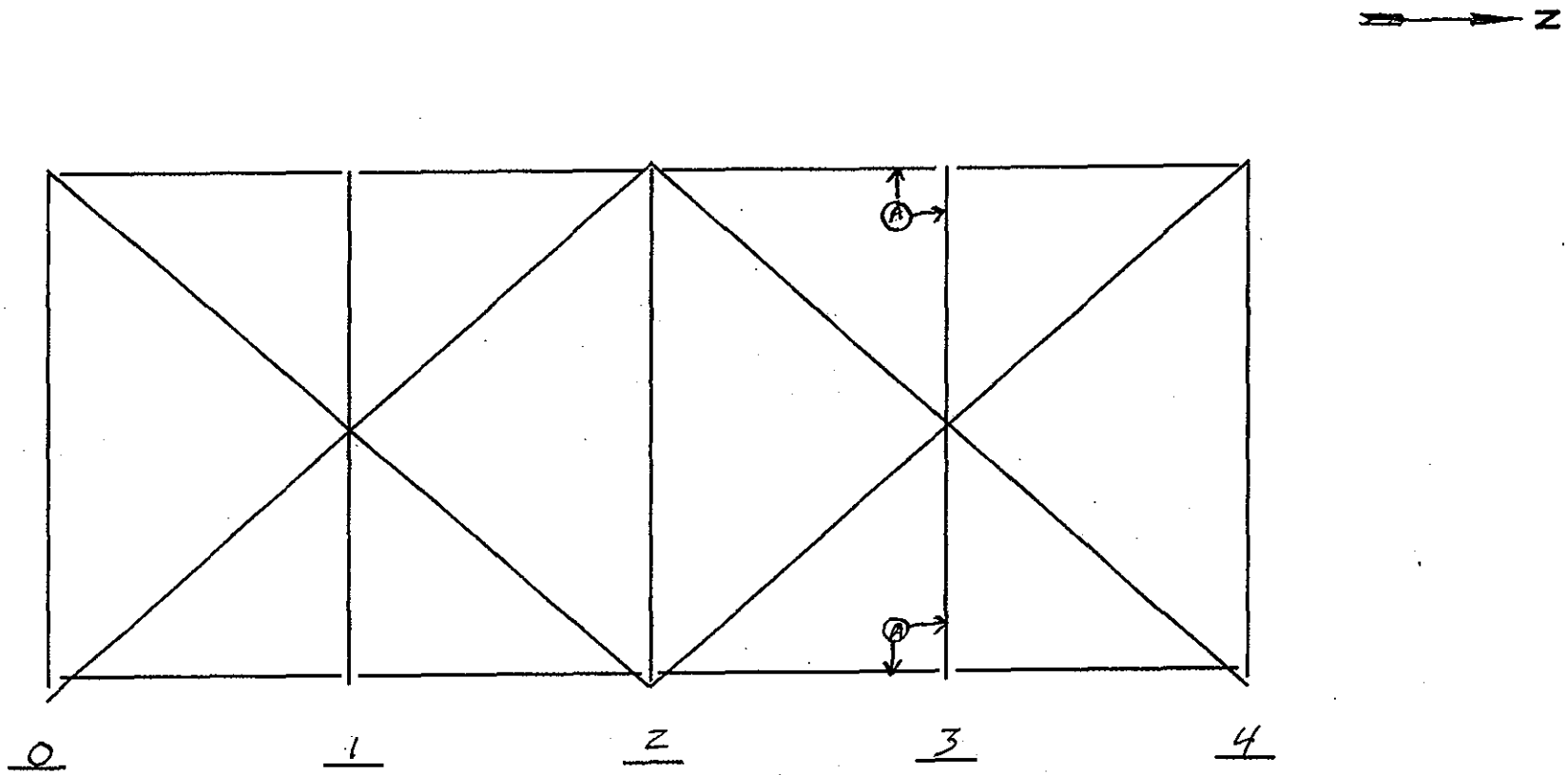

(A) WELDED DRAIN SUPP. ℄

(B) ALL BRACING BOTTOM GUSSET PL'S ARE FLAME CUT AROUND CONNECTIONS

SPAN 4

NOTES:

LOWER CHORD BRACING	
DEPARTMENT OF THE ARMY NEW ENGLAND DIVISION CORPS OF ENGINEERS	
BOURNE HIGHWAY BRIDGE ROUTINE INSPECTION	
NOTES BY: LICHTENSTEIN CONSULTING ENGINEERS	
JOB #1784	DATE: 3/11
CREW: TF, PHN	SHEET 3 OF 5

HO 219

N

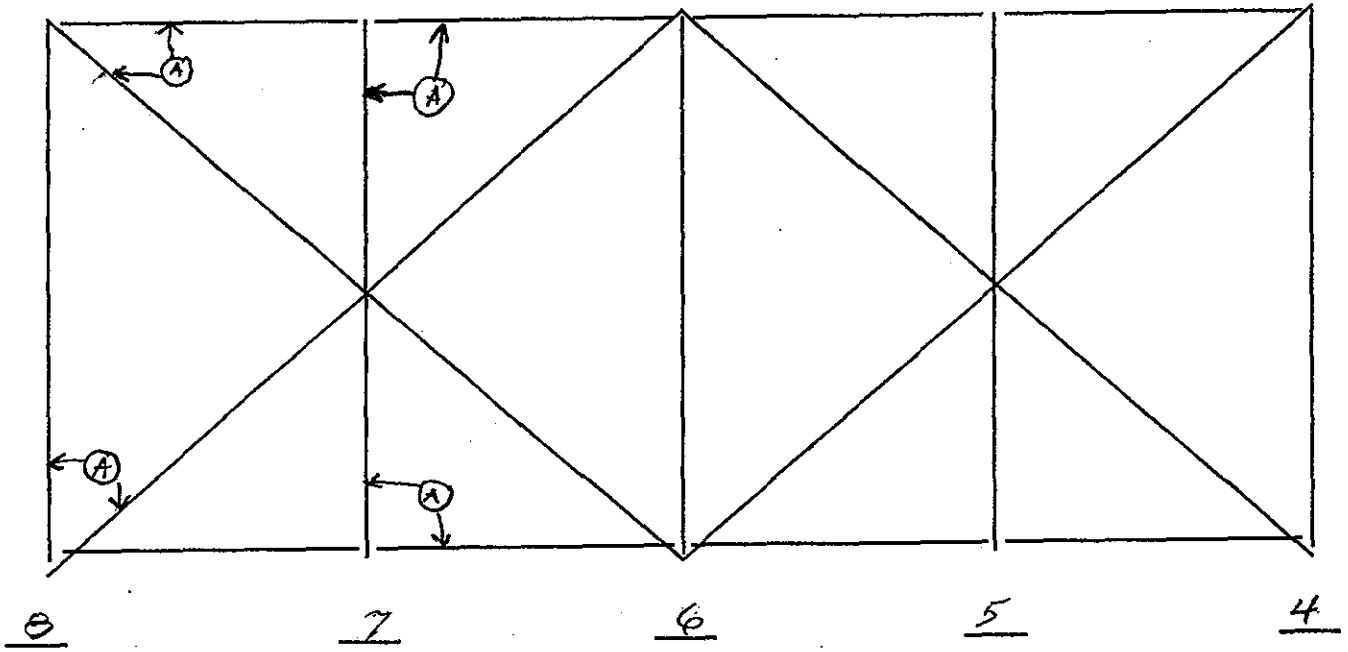

(A) WELDED DRAIN SUPP. &
(B) ALL BRACING BTM. GUS. R's ARE FLAME CUT AROUND CONNECTION. (TYP.)

B3-2

SPAN 4

NOTES:

LOWER CHORD BRACING

DEPARTMENT OF THE ARMY
NEW ENGLAND DIVISION CORPS OF ENGINEERS

BOURNE HIGHWAY BRIDGE
ROUTINE INSPECTION

NOTES BY: LICHTENSTEIN
CONSULTING ENGINEERS

JOB #1784	DATE: 3/11
CREW: TF, PN	SHEET 2 OF 5

41
219

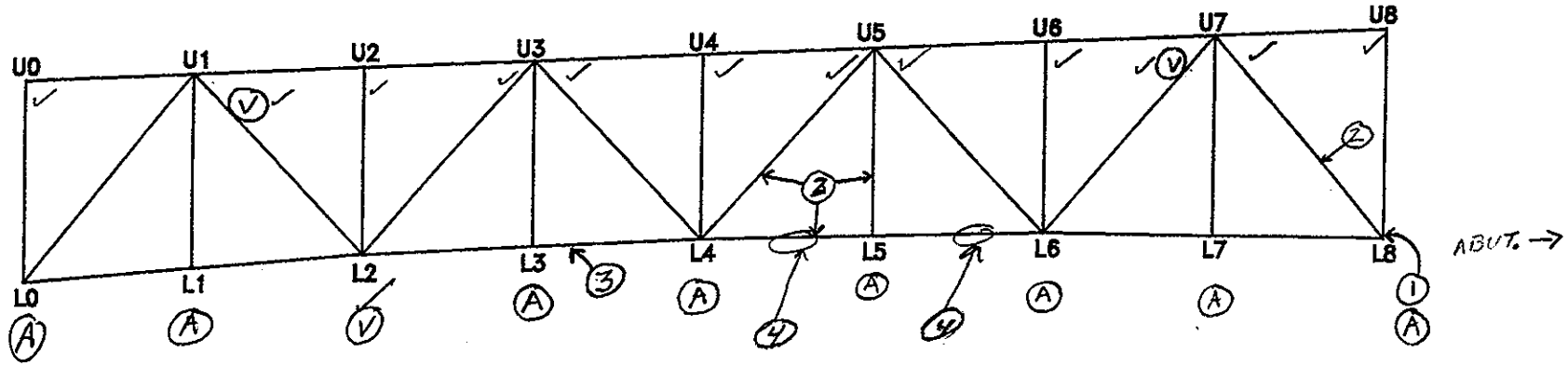

42
219

✓ VISUAL INSPECTION
(V) HANDS ON INSPECT
(A) SEE ADDITIONAL SHEET.

NOTES: (1) 4"x4" PITT. 1/8" E. FACE E. GUS VERT.
(2) WELDED SCUP. BRKT TO EAST FACE OF MEMBER.
(3) MISSING BOLT TOP LACING
JB (3/22/96) (4) 1/4" IR between cover plates of truss member.

SPAN 6

W TRUSS E ELEVATION

TRUSS ELEVATION

DEPARTMENT OF THE ARMY
NEW ENGLAND DIVISION CORPS OF ENGINEERS

BOURNE HIGHWAY BRIDGE
ROUTINE INSPECTION

NOTES BY: LICHTENSTEIN
CONSULTING ENGINEERS

JOB #1784 | DATE: 3/4/96
CREW: TF/PWN | SHEET 1 OF 14

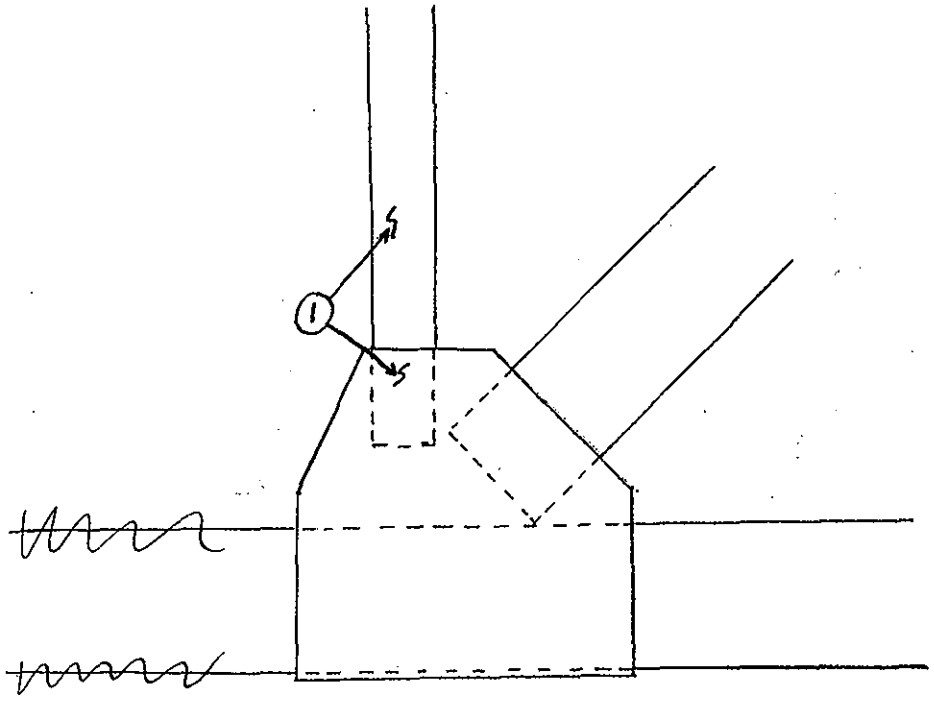

W TRUSS
E ELEV.
SPAN 6
L-O

① MISC. PATCHES, → 10% OF SURFACES
3/16" x 6" x6" PITT. BOTH INSIDE FACES (E.&W)
FULL HGT OF VERT.

DEPARTMENT OF THE ARMY NEW ENGLAND DIVISION CORPS OF ENGINEERS	
BOURNE HIGHWAY BRIDGE ROUTINE INSPECTION	
NOTES BY: LICHTENSTEIN CONSULTING ENGINEERS	
JOB #1784	DATE: 3/4/96
CREW: TF/PWN	SHEET 9 OF 14

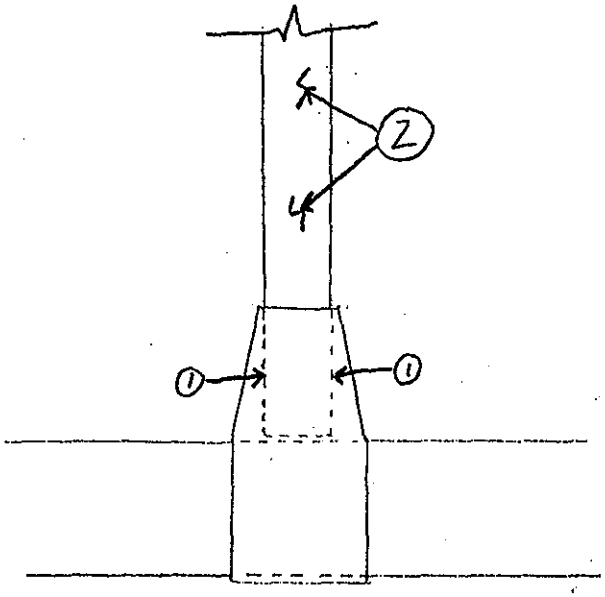

W. TRUSS

W. ELEV

SPAN 6

L-1

① 3/16" PITT. INSIDE FACE E. GUS. VERT 1/2" W x FULL HGT.

② 1/8" x 3" x 3" PITT BOTH INSIDE FACES (E. & W.) OF VERT. FULL HGT.

DEPARTMENT OF THE ARMY NEW ENGLAND DIVISION CORPS OF ENGINEERS	
BOURNE HIGHWAY BRIDGE ROUTINE INSPECTION	
NOTES BY: LICHTENSTEIN CONSULTING ENGINEERS	
JOB #1784	DATE: 3/4/96
CREW: TF/PWN	SHEET 8 OF 14

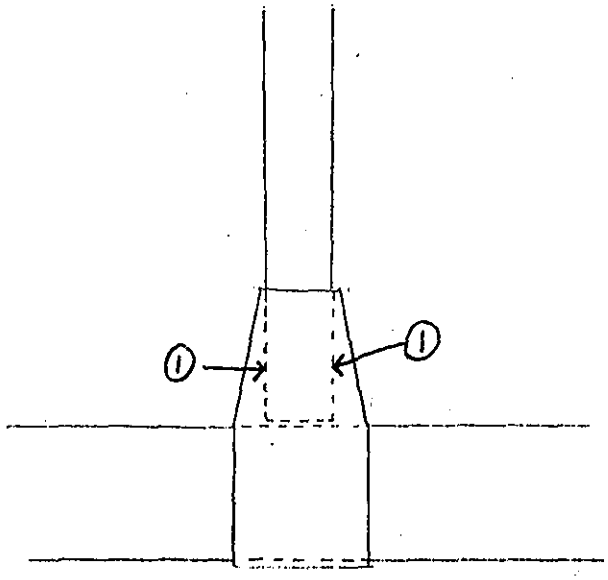

W TRUSS
W ELEV.
SPAN 6
L 3

① 3/16" TO 1/4" PITT. INSIDE FACE E. GUS. VERT.
FULL HGT. x 1/2" W

DEPARTMENT OF THE ARMY NEW ENGLAND DIVISION CORPS OF ENGINEERS	
BOURNE HIGHWAY BRIDGE ROUTINE INSPECTION	
NOTES BY: LICHTENSTEIN CONSULTING ENGINEERS	
JOB #1784	DATE: 3/4/96
CREW: TF/PWN	SHEET 7 OF 14

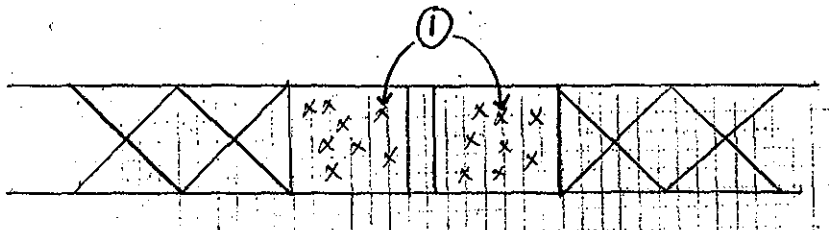

SECTION A

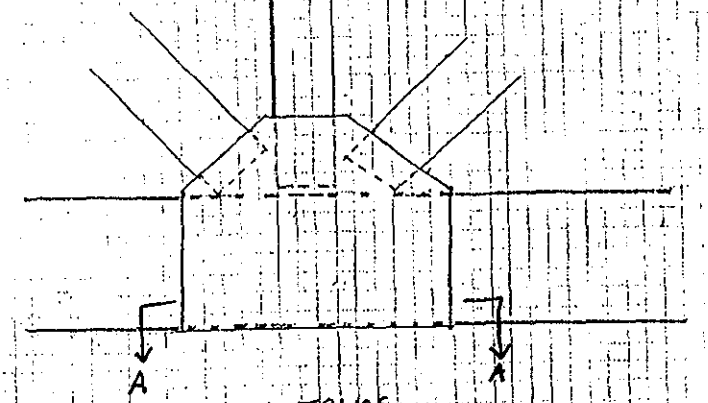

W TRUSS
W ELEV.
SPAN 6
L 4

1 3/16" PITT. FULL AREA

DEPARTMENT OF THE ARMY NEW ENGLAND DIVISION CORPS OF ENGINEERS	
BOURNE HIGHWAY BRIDGE ROUTINE INSPECTION	
NOTES BY: LICHTENSTEIN CONSULTING ENGINEERS	
JOB #1784	DATE: 3/4/96
CREW: TF/PWN	SHEET 6 OF 14

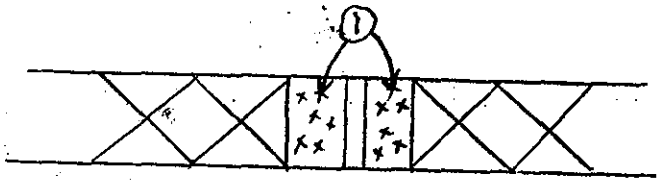

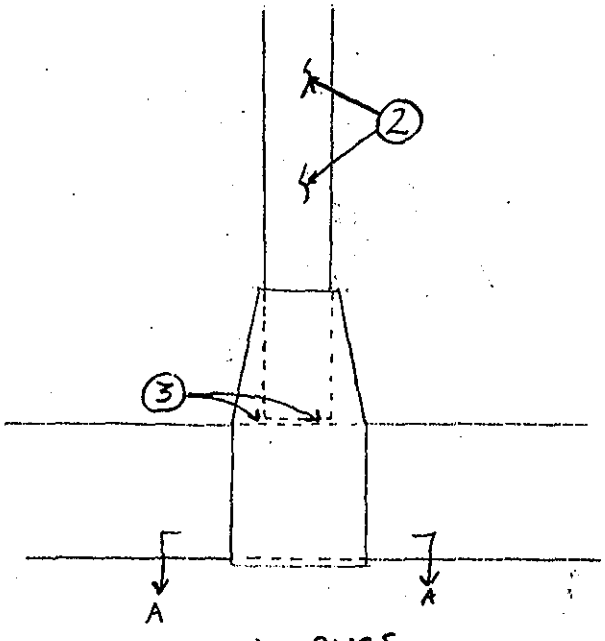

W. TRUSS

W. ELEV

SPAN 6

L 5

① 3/16" PITT. TOTAL AREA.

② 3/16" PITT. INSIDE E.FACE 6 PATCHES 3"x3"

③ INSIDE FACE W. GUS. 3/16" D x 1/2" H x FULL WIDTH PITT.

DEPARTMENT OF THE ARMY NEW ENGLAND DIVISION CORPS OF ENGINEERS	
BOURNE HIGHWAY BRIDGE ROUTINE INSPECTION	
NOTES BY: LICHTENSTEIN CONSULTING ENGINEERS	
JOB #1784	DATE: 3/4/96
CREW: TF/PWN	SHEET 5 OF 14

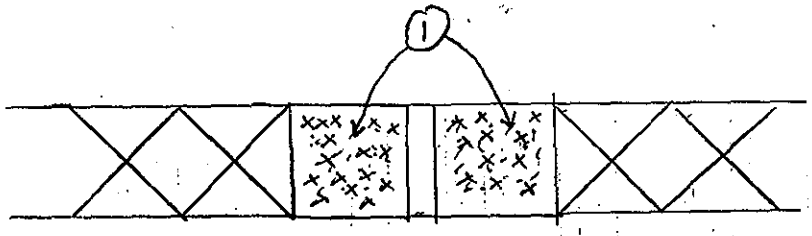

SECTION A

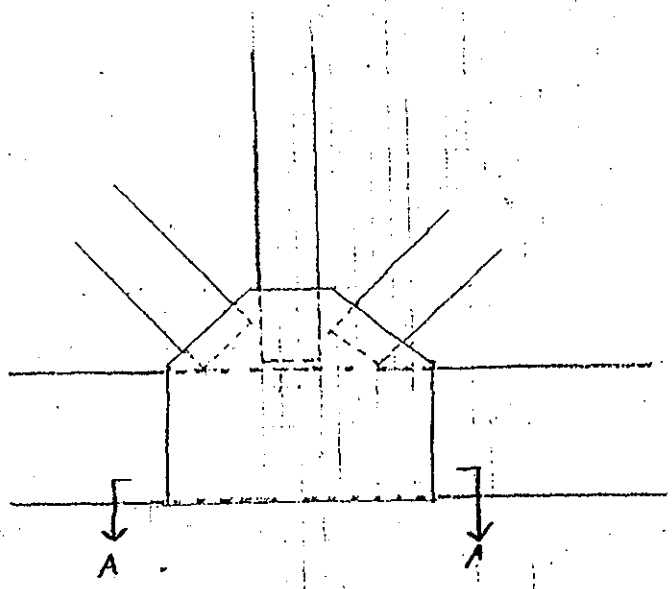

W. ELEV.
W. TRUSS
SPAN 6
L 6

① 3/16" PITT TOTAL AREA

DEPARTMENT OF THE ARMY NEW ENGLAND DIVISION CORPS OF ENGINEERS	
BOURNE HIGHWAY BRIDGE ROUTINE INSPECTION	
NOTES BY: LICHTENSTEIN CONSULTING ENGINEERS	
JOB #1784	DATE: 3/4/96
CREW: TF/PWN	SHEET 4 OF 14

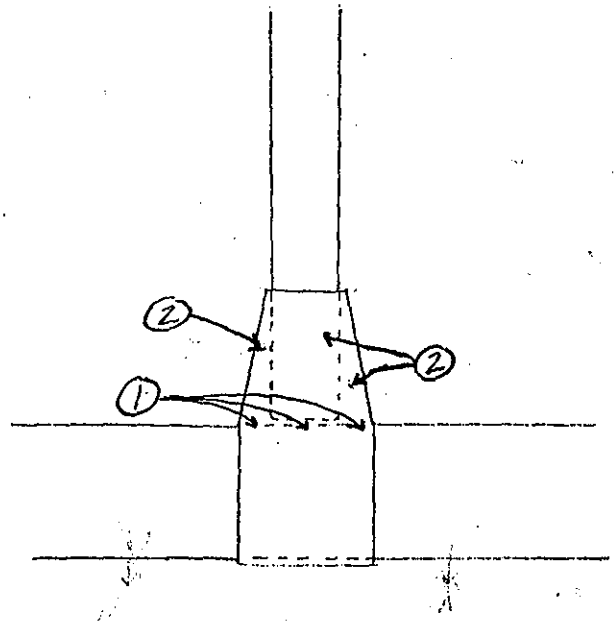

W. ELEV.

W. TRUSS

SPAN 6

L - 7

① 3/16" x 1/2" W x FULL WIDTH PITT. INSIDE FACE OF GUS ALONG BTM CHORD.

② PITT. 3/16" x 3" x 3" E. GUS. (VERT.)

DEPARTMENT OF THE ARMY NEW ENGLAND DIVISION CORPS OF ENGINEERS	
BOURNE HIGHWAY BRIDGE ROUTINE INSPECTION	
NOTES BY: LICHTENSTEIN CONSULTING ENGINEERS	
JOB #1784	DATE: 3/4/96
CREW: TF/PWN	SHEET 3 OF 14

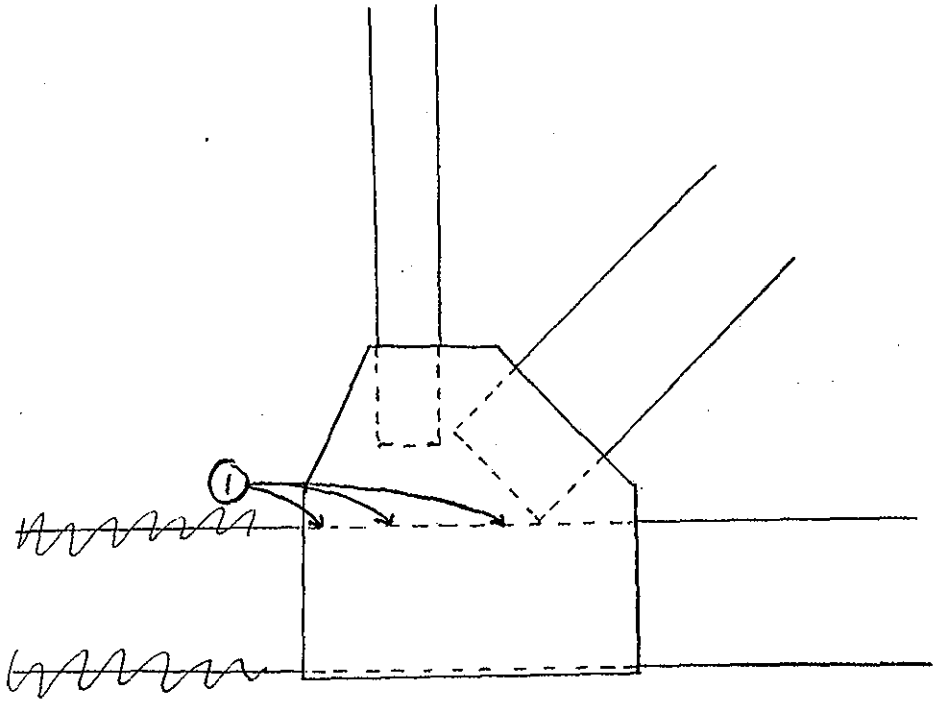

W. ELEV.

W. TRUSS

SPAN 6

L 8

1. INSIDE FACE WEST GUS. 3/16" x 1/2" H x FULL WIDTH PITT.

DEPARTMENT OF THE ARMY NEW ENGLAND DIVISION CORPS OF ENGINEERS	
BOURNE HIGHWAY BRIDGE ROUTINE INSPECTION	
NOTES BY: LICHTENSTEIN CONSULTING ENGINEERS	
JOB #1784	DATE: 3/4/96
CREW: TF/PWN	SHEET 2 OF 14

TYPICAL - W FACE VERT & DIAG MEMBERS W/ 1/8" PITT OVER 10% SURF. AREA

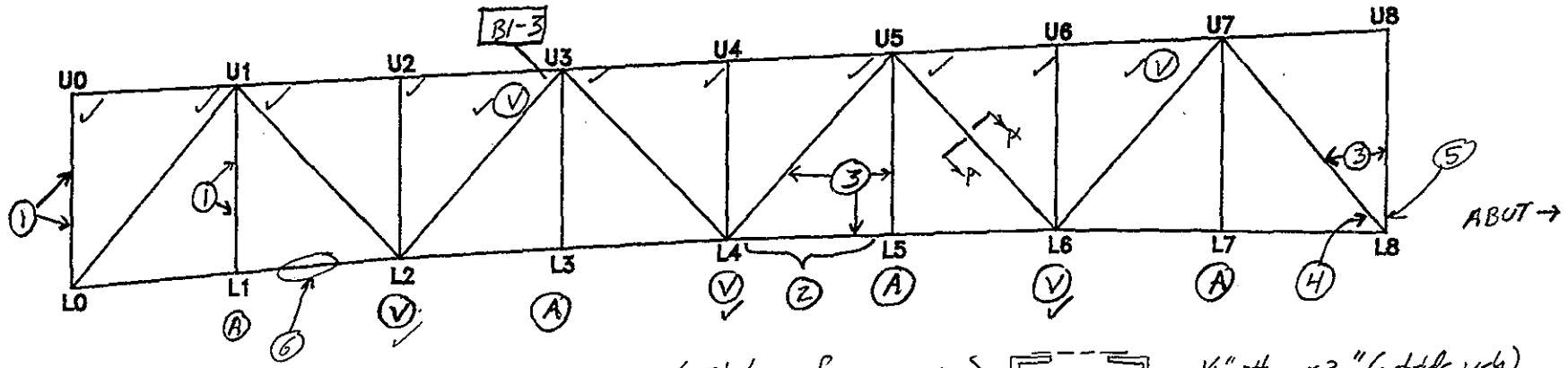

(Total surface area of pitting on U5-L6 ≤ 5%)

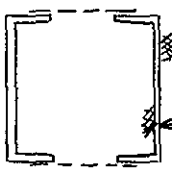

SECTION A-A

5 1/4" pitting x 2" (outside web)

5 1/4" pitting x 2" (inside web)

This is the worst section on this sheet.

B9-12 & B9-13

51 219

✓ VISUAL INSPECTION

(V) HANDS ON INSPECT

(A) SEE ADDITIONAL SHEET

NOTES: (1) 1/16" to 1/8" PITT 75% SURFACE AREA W. FACE VERT.

(2) 1/4" (IR) BETWEEN COV. PL & TOP L'S FULL LENGTH.

(3) WELDED SCUPPER BRKT.

(4) 8" LONG 1/4" PL WELDED TO INSIDE FACE W. GUS.

JB (3/22/96) (5) East gusset plate at L8 has 3/16" pitting just above diagonal channel for 5"x1". West gusset has 3/16" pitting in same location for 2"x1"

(6) 1/8" pitting at isolated locations, up to 1/2 widths along west face of channel web. (This condition is typical for most truss members on this sheet.)

SPAN 6

E TRUSS E ELEVATION

TRUSS ELEVATION	
DEPARTMENT OF THE ARMY NEW ENGLAND DIVISION CORPS OF ENGINEERS	
BOURNE HIGHWAY BRIDGE ROUTINE INSPECTION	
NOTES BY: LICHTENSTEIN CONSULTING ENGINEERS	
JOB #1784	DATE: 3/4/96
CREW: TF/PWN	SHEET 10 OF 14

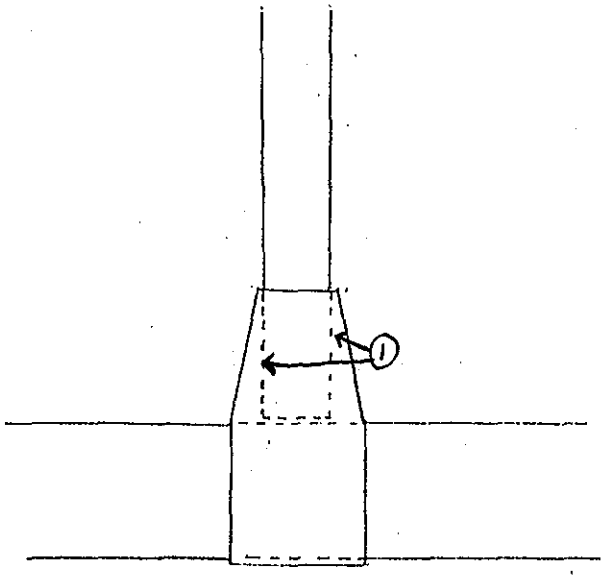

E. TRUSS
W. ELEV
SPAN 6
L-1

① 3/16" x 1" W x FULL HGT. PITT. INSIDE FACE
E. GUS. VERT.

DEPARTMENT OF THE ARMY NEW ENGLAND DIVISION CORPS OF ENGINEERS	
BOURNE HIGHWAY BRIDGE ROUTINE INSPECTION	
NOTES BY: LICHTENSTEIN CONSULTING ENGINEERS	
JOB #1784	DATE: 3/4/96
CREW: TF/PWN	SHEET 11 OF 14

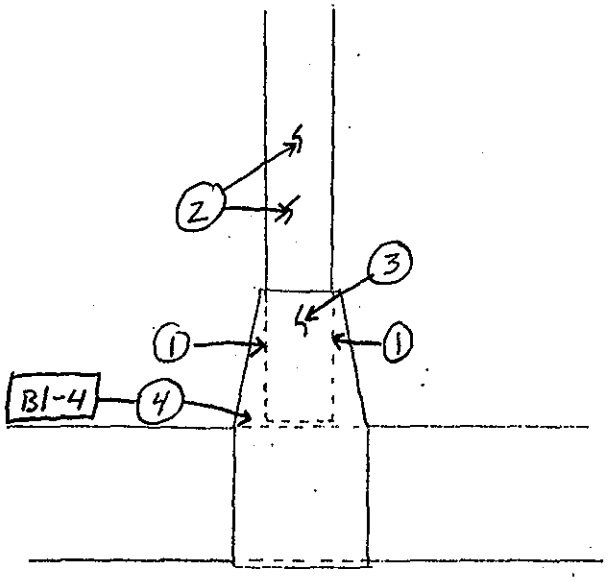

E TRUSS
W ELEV
SPANG
L 3

① 3/16" x 1" W x FULL HGT PITT. INSIDE FACE E. GUS. VERT.

② 2 PATCHES OF PITT. 3/16" x 8" x 8" & 3/16" x 4" x 12" W. FACE VERT.

③ 3/16" x 4" x 4" PITT. W. FACE W. GUS.

④ 3/4" Ø HOLE W. GUS.

DEPARTMENT OF THE ARMY NEW ENGLAND DIVISION CORPS OF ENGINEERS	
BOURNE HIGHWAY BRIDGE ROUTINE INSPECTION	
NOTES BY: LICHTENSTEIN CONSULTING ENGINEERS	
JOB #1784	DATE: 3/4/96
CREW: TF/PWN	SHEET 12 OF 14

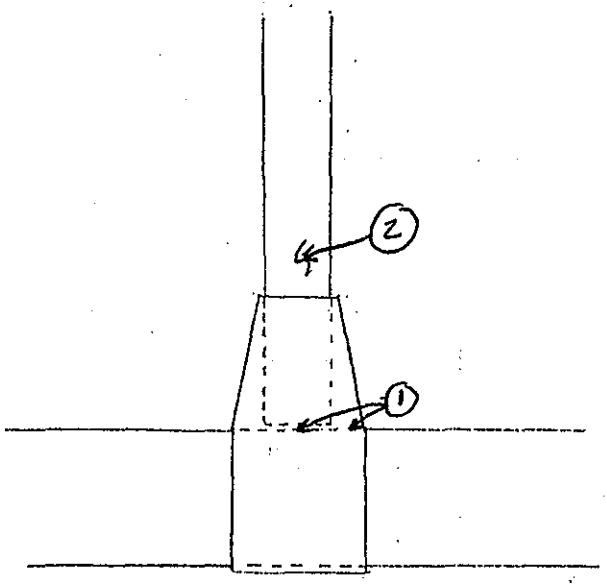

E. TRUSS
W. ELEV.
SPAN 6
L 5

① 3/16" x 3/4" H x FULL LENGTH PITT. INSIDE FACE GUS. PL
② 3/16" PITT 4"x4" INSIDE FACE E. VERT.

DEPARTMENT OF THE ARMY NEW ENGLAND DIVISION CORPS OF ENGINEERS	
BOURNE HIGHWAY BRIDGE ROUTINE INSPECTION	
NOTES BY: LICHTENSTEIN CONSULTING ENGINEERS	
JOB #1784	DATE: 3/4/96
CREW: TF/PWN	SHEET 13 OF 14

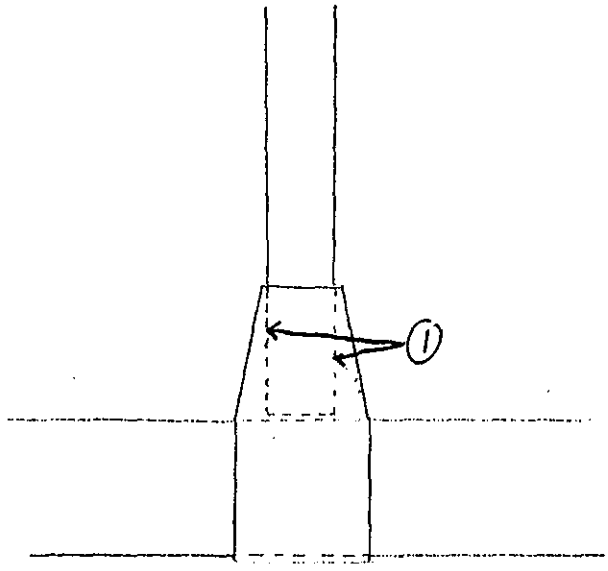

E TRUSS

W. ELEV.

SPAN 6

L 7

1 1/8" PITT x 1/2" x FULL HGT INSIDE FACE W. GUS.

DEPARTMENT OF THE ARMY NEW ENGLAND DIVISION CORPS OF ENGINEERS	
BOURNE HIGHWAY BRIDGE ROUTINE INSPECTION	
NOTES BY: LICHTENSTEIN CONSULTING ENGINEERS	
JOB #1784	DATE: 3/4/96
CREW: TF/PWN	SHEET 14 OF 14

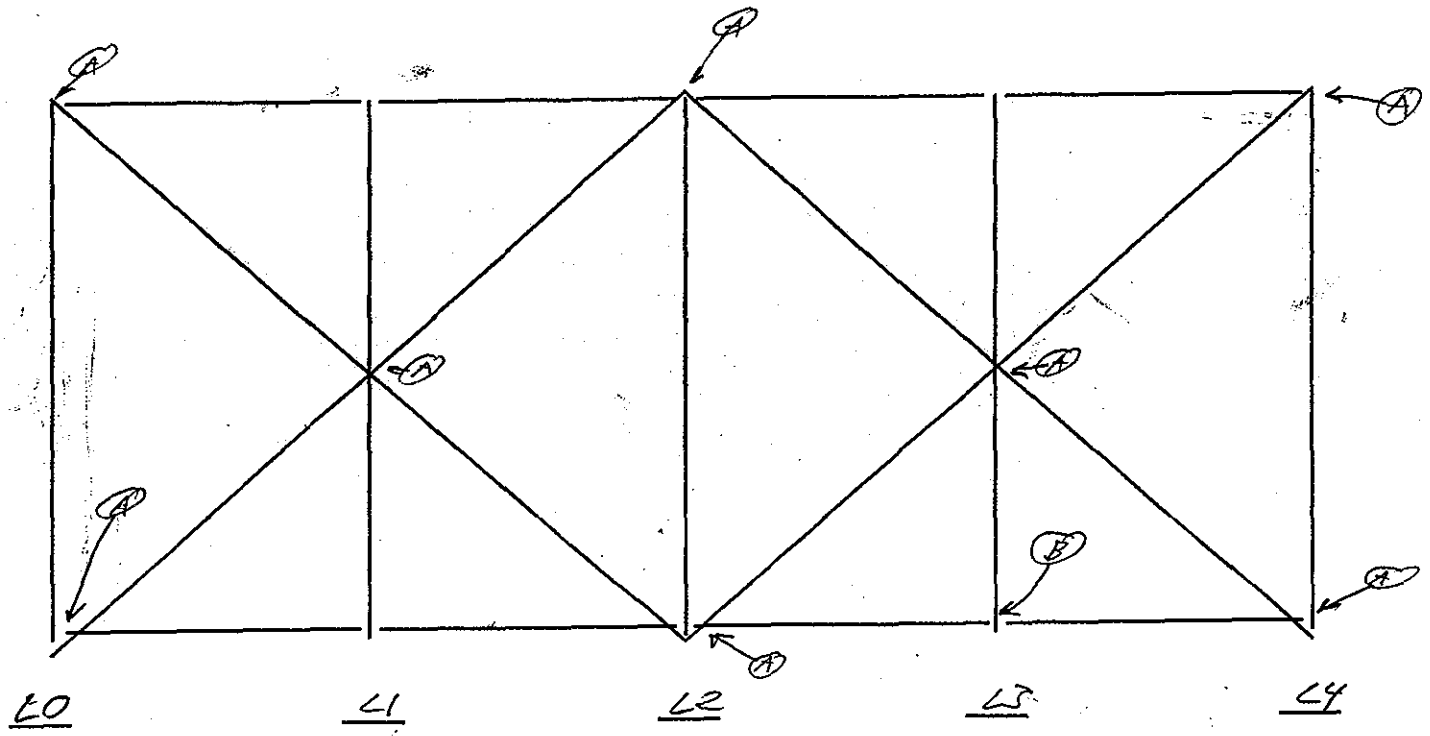

A) Flame cut bottom gusset plate.

B) Connection angles at lower cord cross bracing members typically have 1/8" pitting on outstanding legs.

C) Isolated 1/8" pitting x 1" ϕ on tapers of flange angles (Both Top & Bottom)

SPAN 6

NOTES:

LOWER CHORD BRACING	
DEPARTMENT OF THE ARMY NEW ENGLAND DIVISION CORPS OF ENGINEERS	
BOURNE HIGHWAY BRIDGE ROUTINE INSPECTION	
NOTES BY: LICHTENSTEIN CONSULTING ENGINEERS	
JOB #1784	DATE: 3/22/96
CREW: JB/PWN	SHEET 1 OF 2

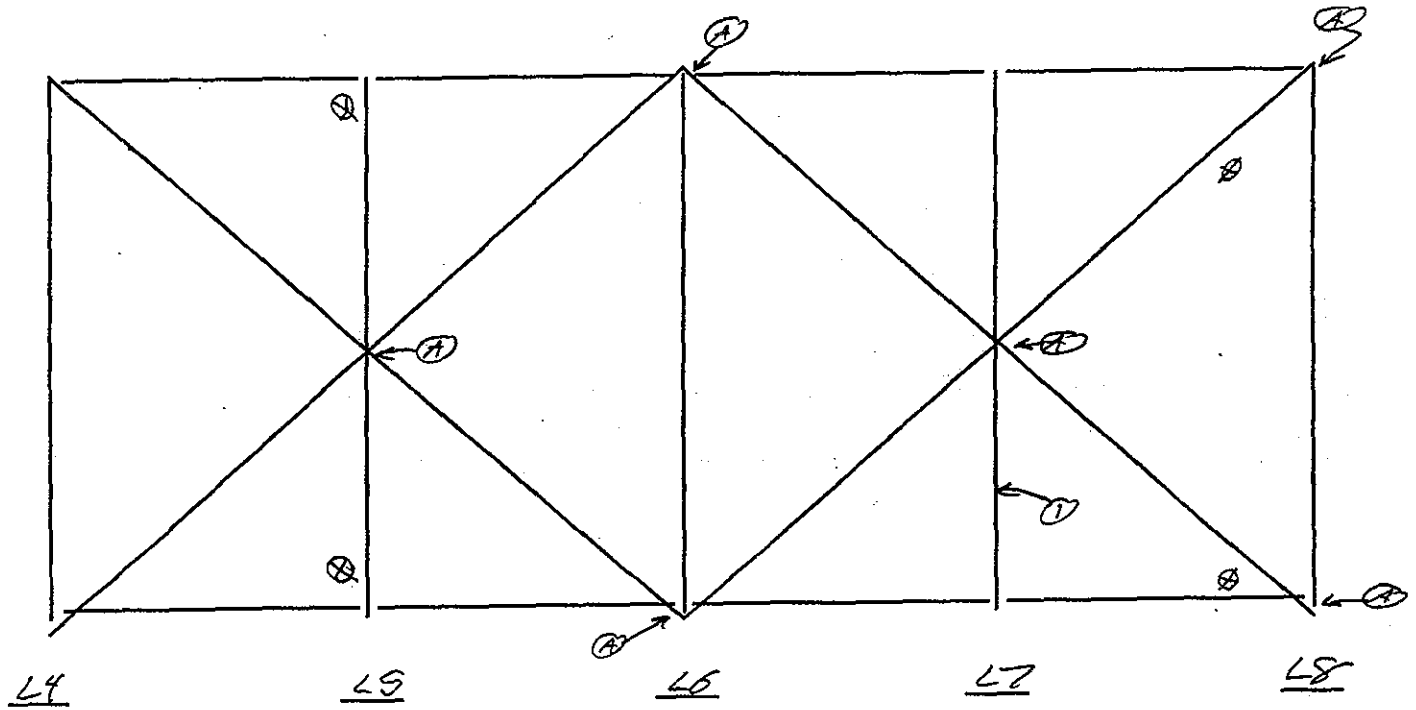

⊗ - Down spout location.

A) Flame cut bottom gusset plate

B) Isolated 3/16" x 1" ϕ pitting on top of bottom flange angles of bracing members.

SPAN 6

NOTES: 1) 1" ϕ hole in bottom flange angle of bracing member BG-6

LOWER CHORD BRACING	
DEPARTMENT OF THE ARMY NEW ENGLAND DIVISION CORPS OF ENGINEERS	
BOURNE HIGHWAY BRIDGE ROUTINE INSPECTION	
NOTES BY: LICHTENSTEIN CONSULTING ENGINEERS	
JOB #1784	DATE: 3/22/96
CREW: JB/PWN	SHEET 2 OF 2

II. FLOOR SYSTEM

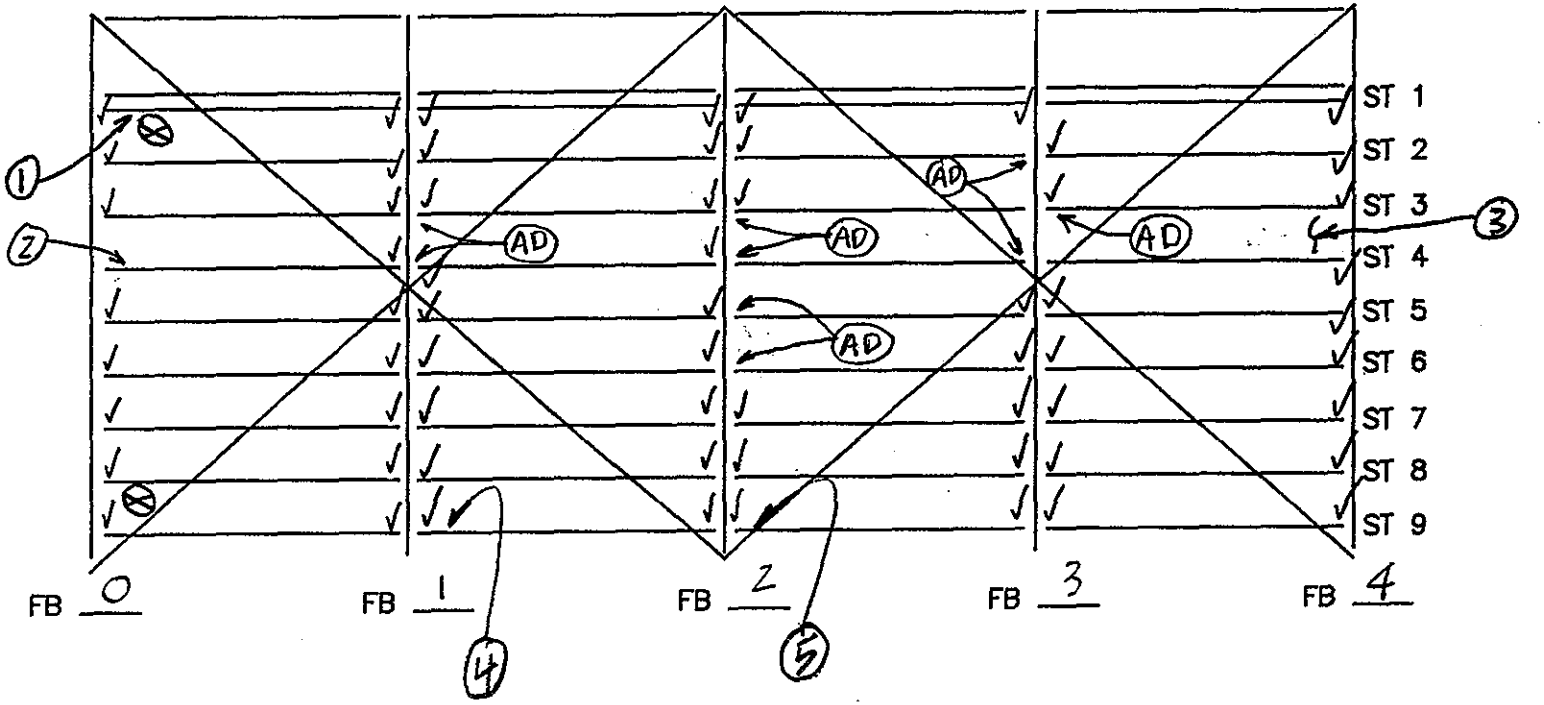

⊗ = DOWNSPOUT

SPAN 7

NOTES:

1. LT RUST ON BOT. FL. STR 1 @ DOWNSPOUT - POSSIBLE LEAK
2. FLAME CUT COPE APPROX. 10" LONG BOT. FL. WEST EL.
3. LOOSE GRATING ON CATWALK
4. UP TO 1/4" PITTING 8" WIDE X 1/2" HIGH; 3" FROM VERT. STIFF *
5. " 3/16" " 9" " ; @ END OF STRINGER *

* (3/22/96 GG/WM)

FLOOR SYSTEM

DEPARTMENT OF THE ARMY
NEW ENGLAND DIVISION CORPS OF ENGINEERS

BOURNE HIGHWAY BRIDGE
ROUTINE INSPECTION

NOTES BY: LICHTENSTEIN
CONSULTING ENGINEERS

JOB #1784 | DATE: 3/18/96
CREW: WM, GG | SHEET 9 OF 19

58
219

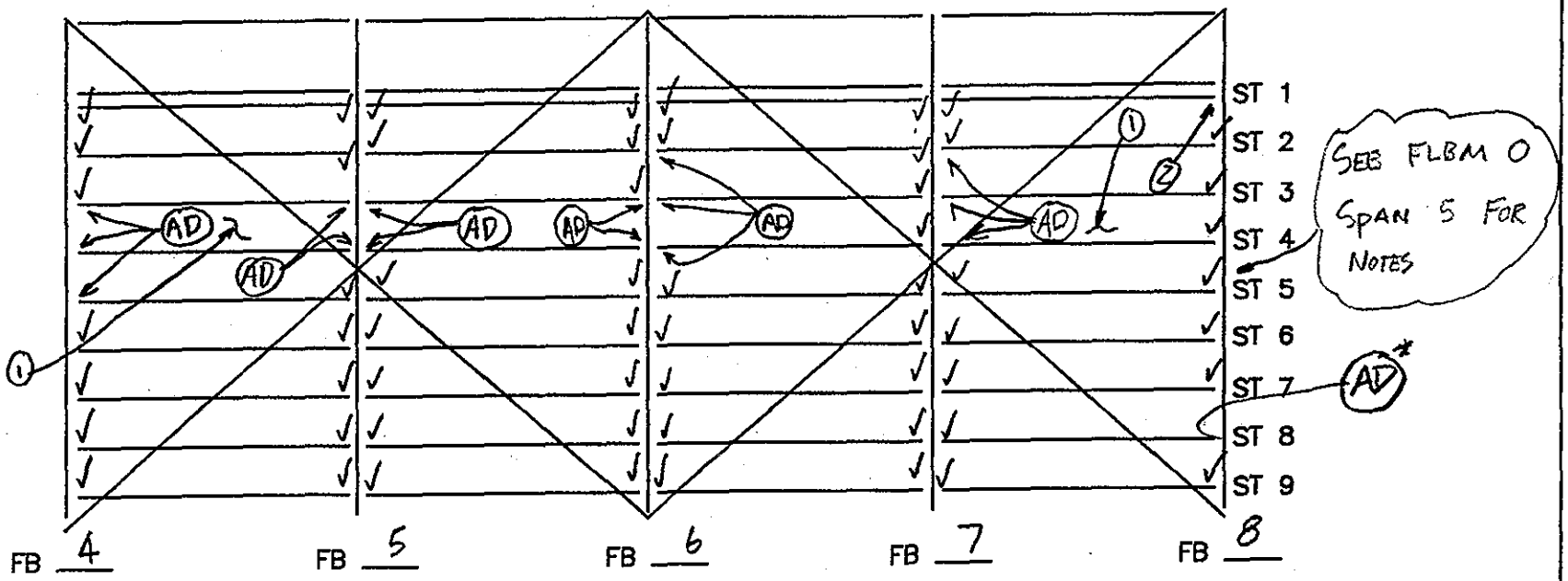

SPAN 7

NOTES:

① LOOSE GRATING ON CATWALK

② LT RUST ? up TO 1/16" ON BOT FL @ CONN.

* (3/22/96 GG/WM)

FLOOR SYSTEM	
DEPARTMENT OF THE ARMY NEW ENGLAND DIVISION CORPS OF ENGINEERS	
BOURNE HIGHWAY BRIDGE ROUTINE INSPECTION	
NOTES BY: LICHTENSTEIN CONSULTING ENGINEERS	
JOB #1784	DATE: 3/18/96
CREW: WM, GG	SHEET 10 OF 19

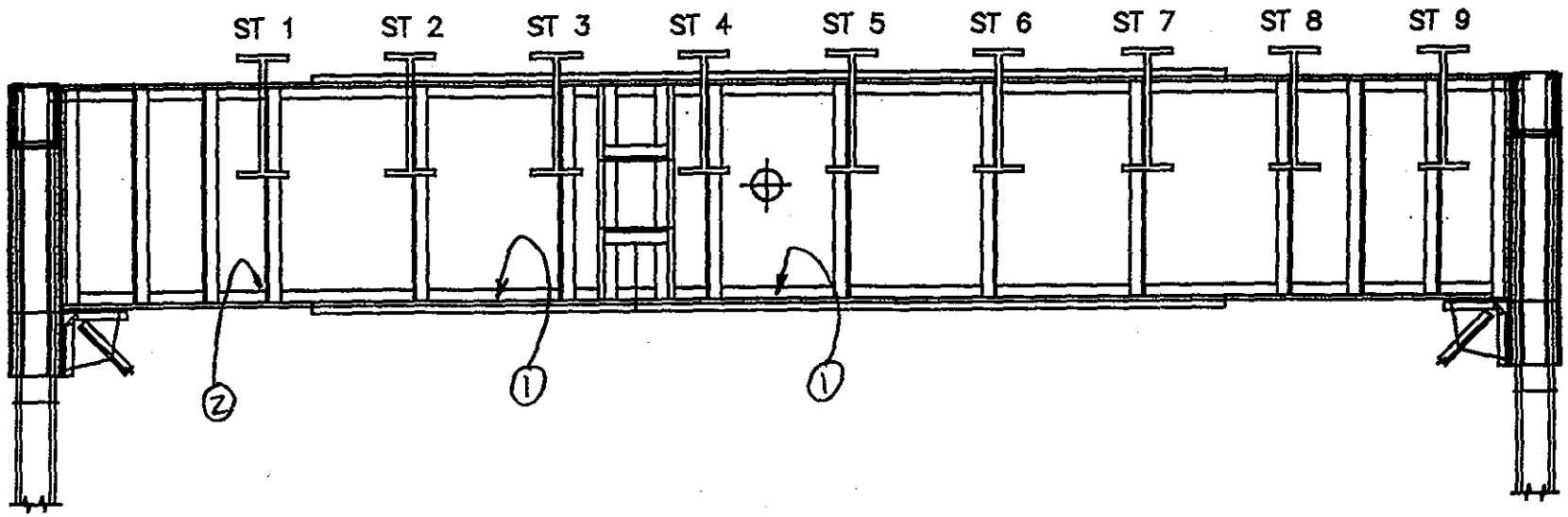

60
219

SPAN 7
FLOORBEAM 0 S ELEV.

NOTES:
1. LT RUST ON TOP OF BOT. FL.
2. SIM. TO COND 1, ON N. ELEV.

FLOORBEAM

DEPARTMENT OF THE ARMY
NEW ENGLAND DIVISION CORPS OF ENGINEERS

BOURNE HIGHWAY BRIDGE
ROUTINE INSPECTION

NOTES BY: LICHTENSTEIN
CONSULTING ENGINEERS

JOB #1784	DATE: 3/18/96
CREW: WM, GG	SHEET 11 OF 19

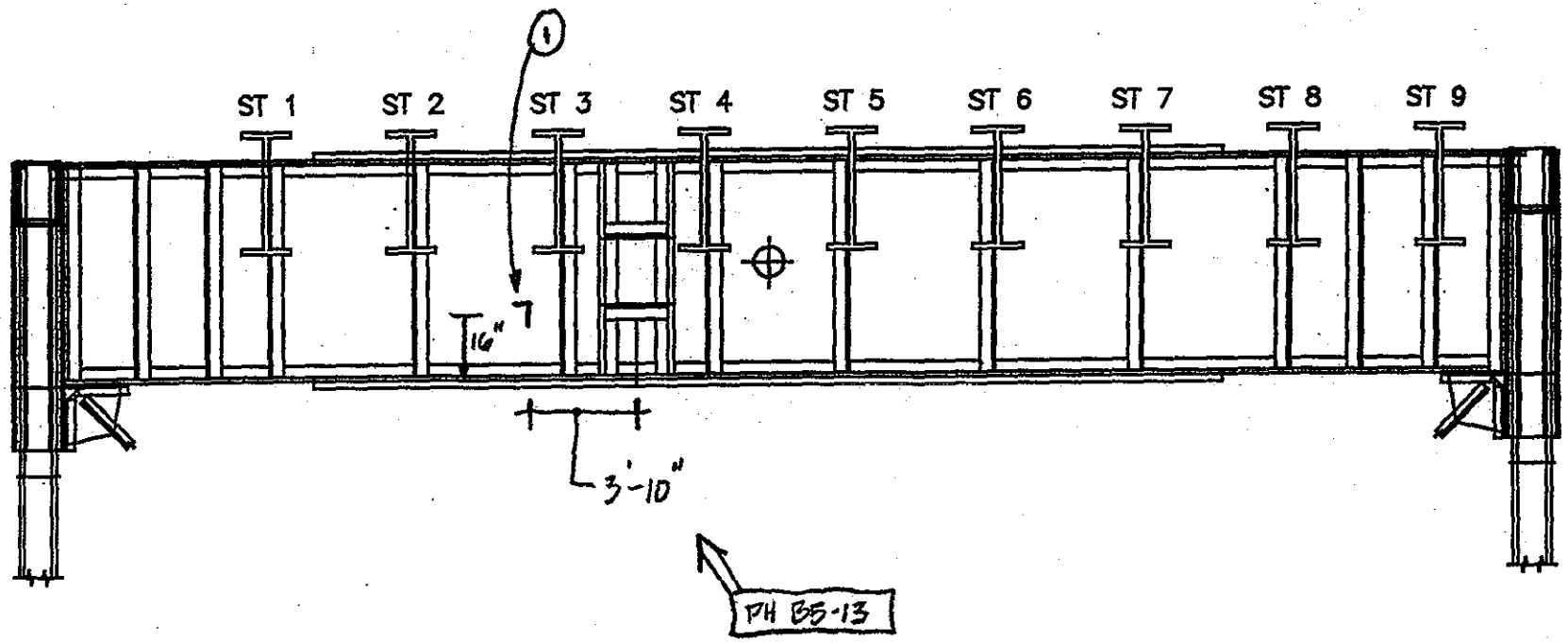

SPAN 7
FLOORBEAM 8 S ELEV.

NOTES:

1. FSD - CATWALK SUPPORT ANGLE WELDED TO FB WEB; WELD QUALITY POOR. SEE PH B5-13

FLOORBEAM	
DEPARTMENT OF THE ARMY NEW ENGLAND DIVISION CORPS OF ENGINEERS	
BOURNE HIGHWAY BRIDGE ROUTINE INSPECTION	
NOTES BY: LICHTENSTEIN CONSULTING ENGINEERS	
JOB #1784	DATE: 3/18/96
CREW: WM, GG	SHEET 13 OF 19

No STRINGERS PRESENT TYP.

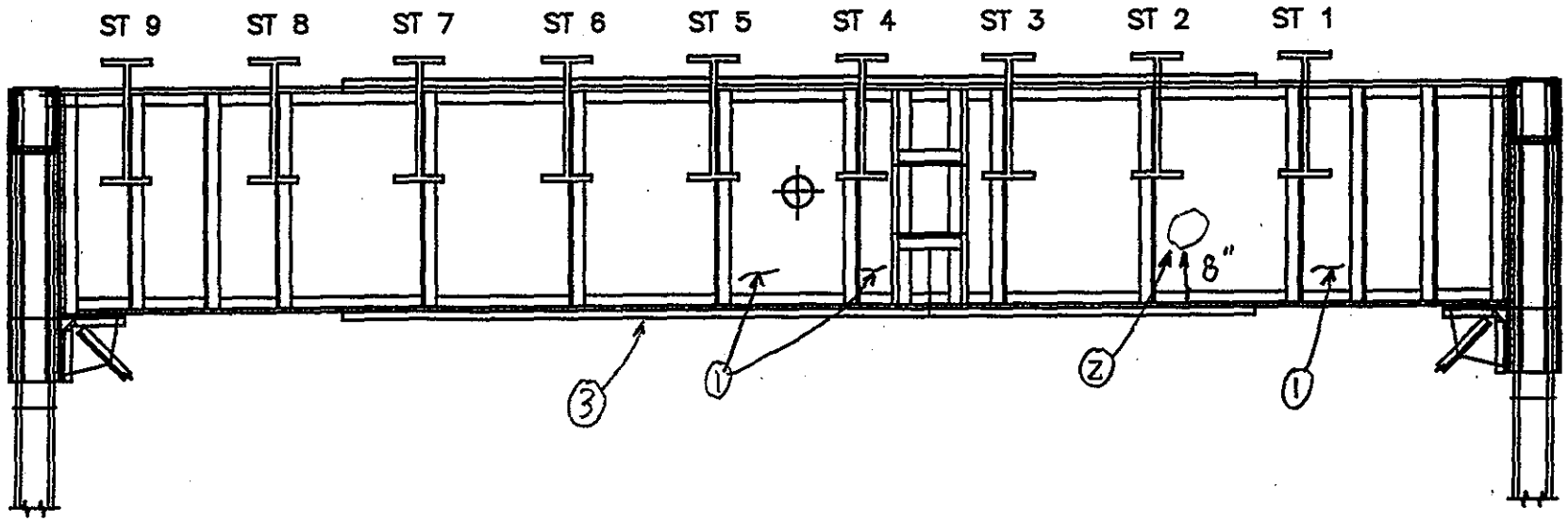

62
219

SPAN 7
FLOORBEAM 8 N ELEV.

NOTES:

1. LT RUST ON FLBM WEB & ON TOP OF BOT. FL.
2. UP TO 1/16" PITT. x 4" ϕ APPROX. 8" UP FROM TOP OF BOT. FL.
3. RANDOM AREAS OF (IR) BTWN FLBM & COVER PL (UP TO ≈ 1/4")

FLOORBEAM

DEPARTMENT OF THE ARMY
NEW ENGLAND DIVISION CORPS OF ENGINEERS

BOURNE HIGHWAY BRIDGE
ROUTINE INSPECTION

NOTES BY: LICHTENSTEIN
CONSULTING ENGINEERS

JOB #1784 | DATE: 3/18/96
CREW: WM, GG | SHEET 12 OF 19

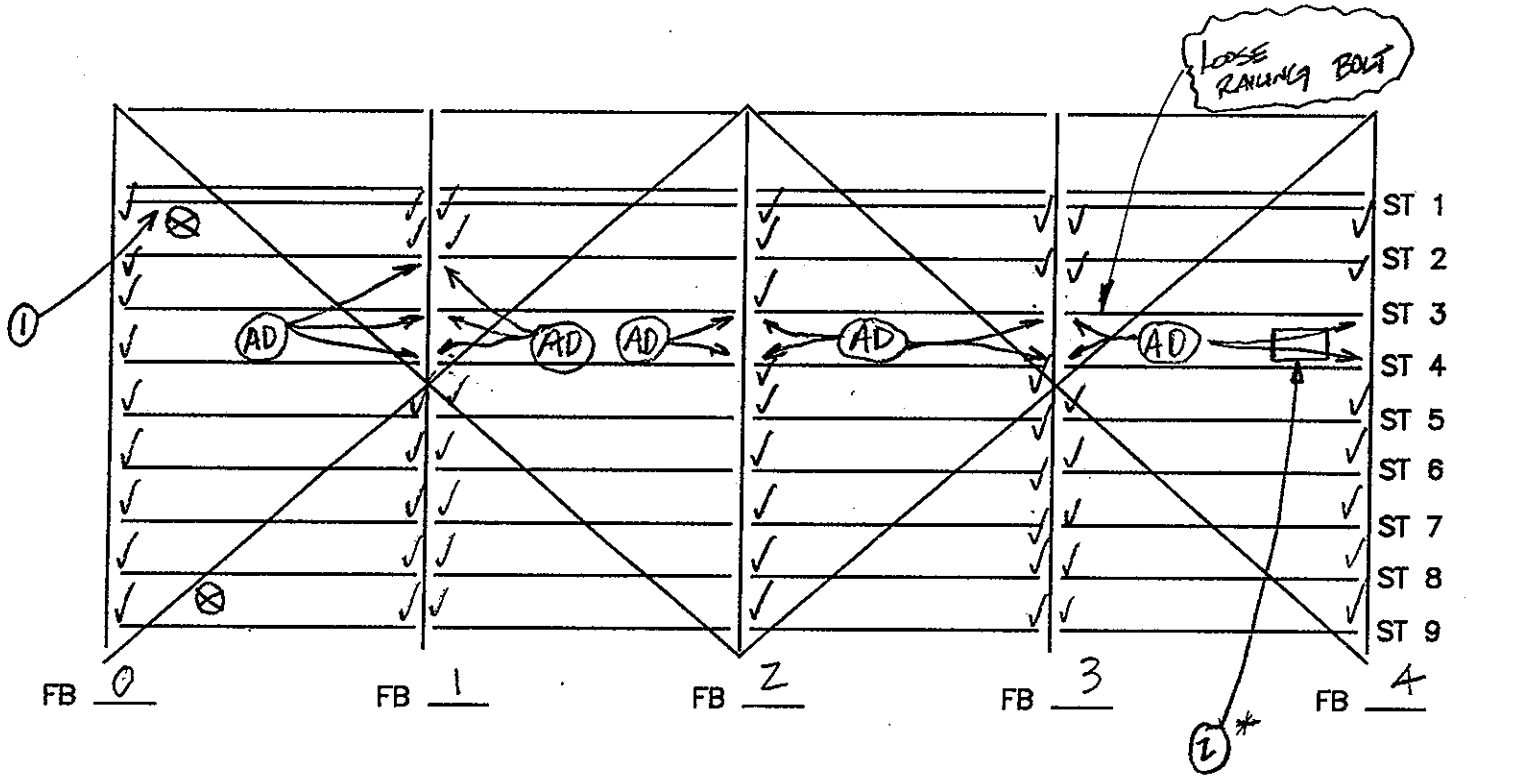

⊗ = DOWNSPOUT

SPAN 5

NOTES:

1. LT. RUST ON BOT. FL. STR 1 @ DOWNSPOUT LOCATION; ALSO PITTING * (1/8" x 4" WIDE)
2. LOOSE GRATING

* (3/22/96 GG WM)

FLOOR SYSTEM	
DEPARTMENT OF THE ARMY NEW ENGLAND DIVISION CORPS OF ENGINEERS	
BOURNE HIGHWAY BRIDGE ROUTINE INSPECTION	
NOTES BY: LICHTENSTEIN CONSULTING ENGINEERS	
JOB #1784	DATE: 3/18/96
CREW: WM, GG	SHEET 5 OF 19

63
219

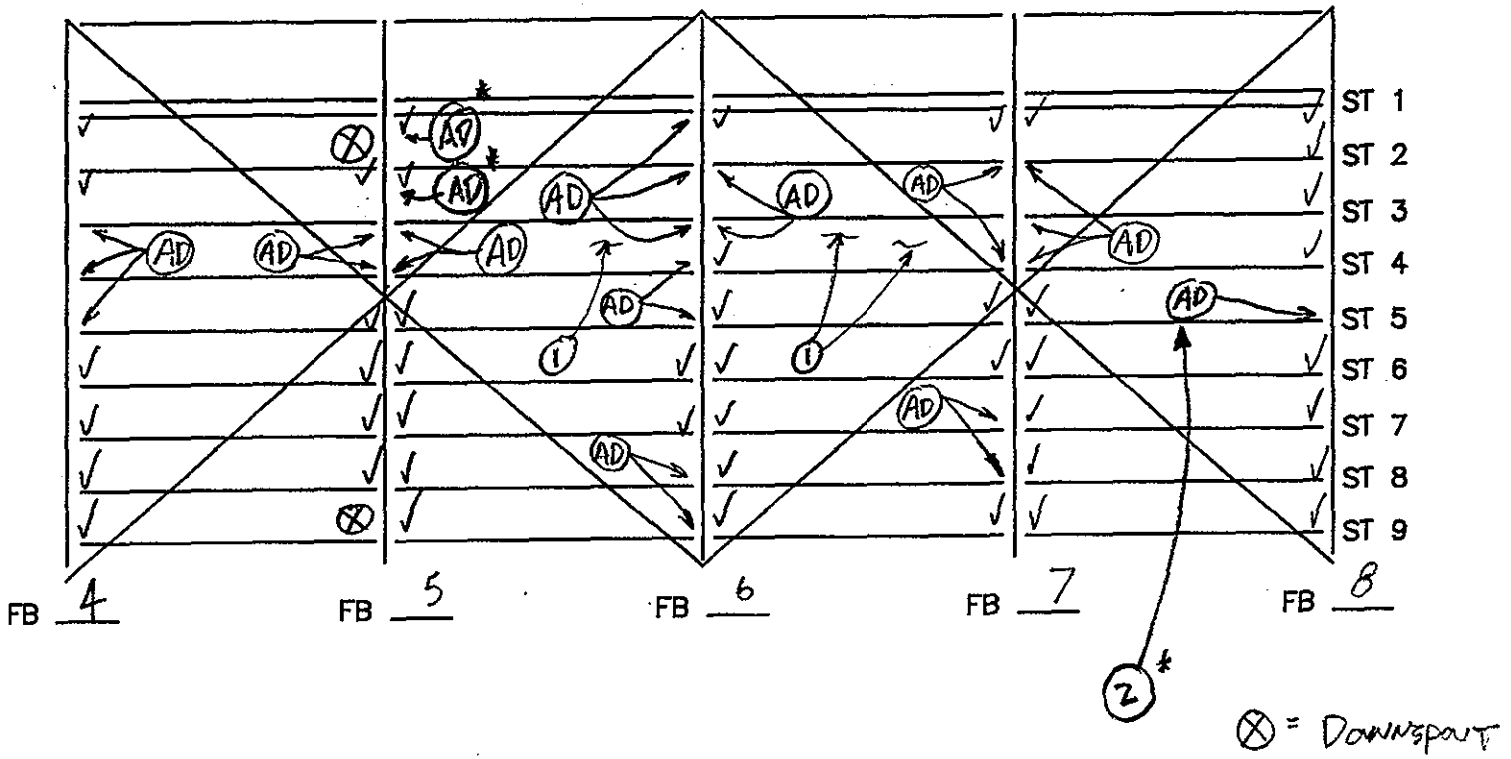

SPAN 5

NOTES:

① LOOSE GRATING ON CATWALK

★ ② 1/8 TO 1/2" PITTING TOP & BOT of BOT FLANGE PH B7-12&13

*(3/22/96 GG/WM)

FLOOR SYSTEM	
DEPARTMENT OF THE ARMY NEW ENGLAND DIVISION CORPS OF ENGINEERS	
BOURNE HIGHWAY BRIDGE ROUTINE INSPECTION	
NOTES BY: LICHTENSTEIN CONSULTING ENGINEERS	
JOB #1784	DATE: 3/18/96
CREW: WM, GG	SHEET 6 OF 19

NO STRINGERS PRESENT TYP.

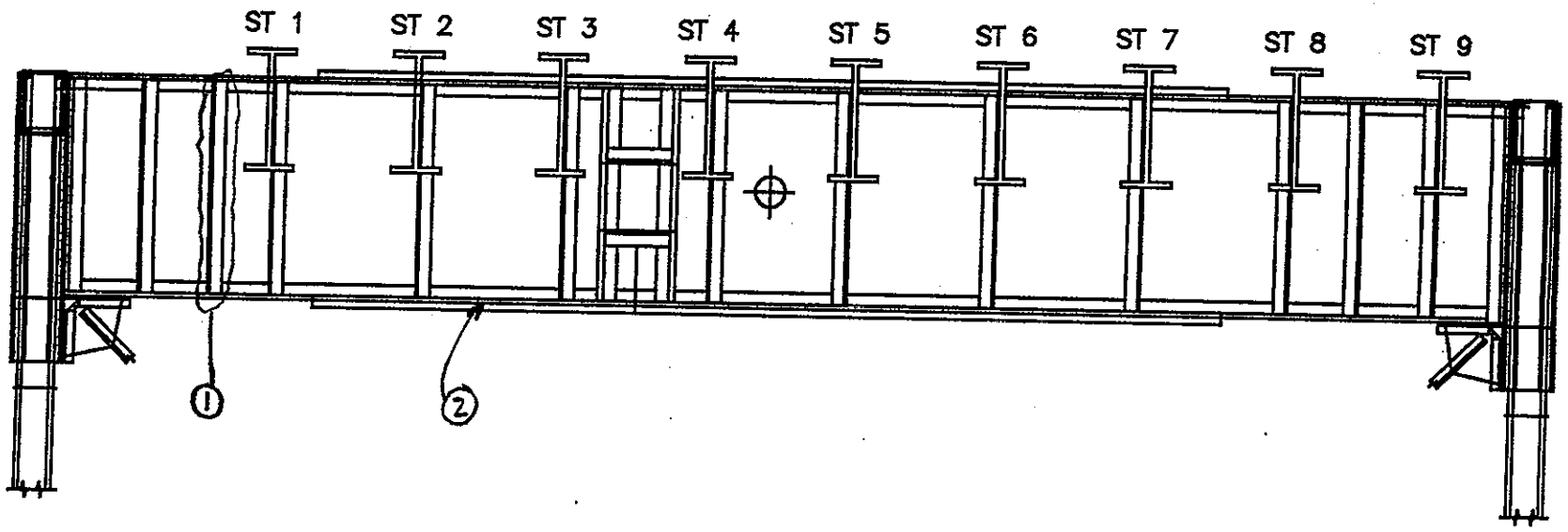

65/219

SPAN 5
FLOORBEAM 0 S ELEV.

NOTES:

1. VT to MED RUST ON ANGLE; RESULT OF DECK LEAKAGE (1/4" PITTING)*
2. RANDOM AREAS of IR ALONG CON PL (≈ 1/4")

* (GG/WM 3/22/96)

FLOORBEAM

DEPARTMENT OF THE ARMY
NEW ENGLAND DIVISION CORPS OF ENGINEERS

BOURNE HIGHWAY BRIDGE
ROUTINE INSPECTION

NOTES BY: LICHTENSTEIN
CONSULTING ENGINEERS

JOB #1784	DATE: 3/18/96
CREW: WM, GG	SHEET 7 OF 19

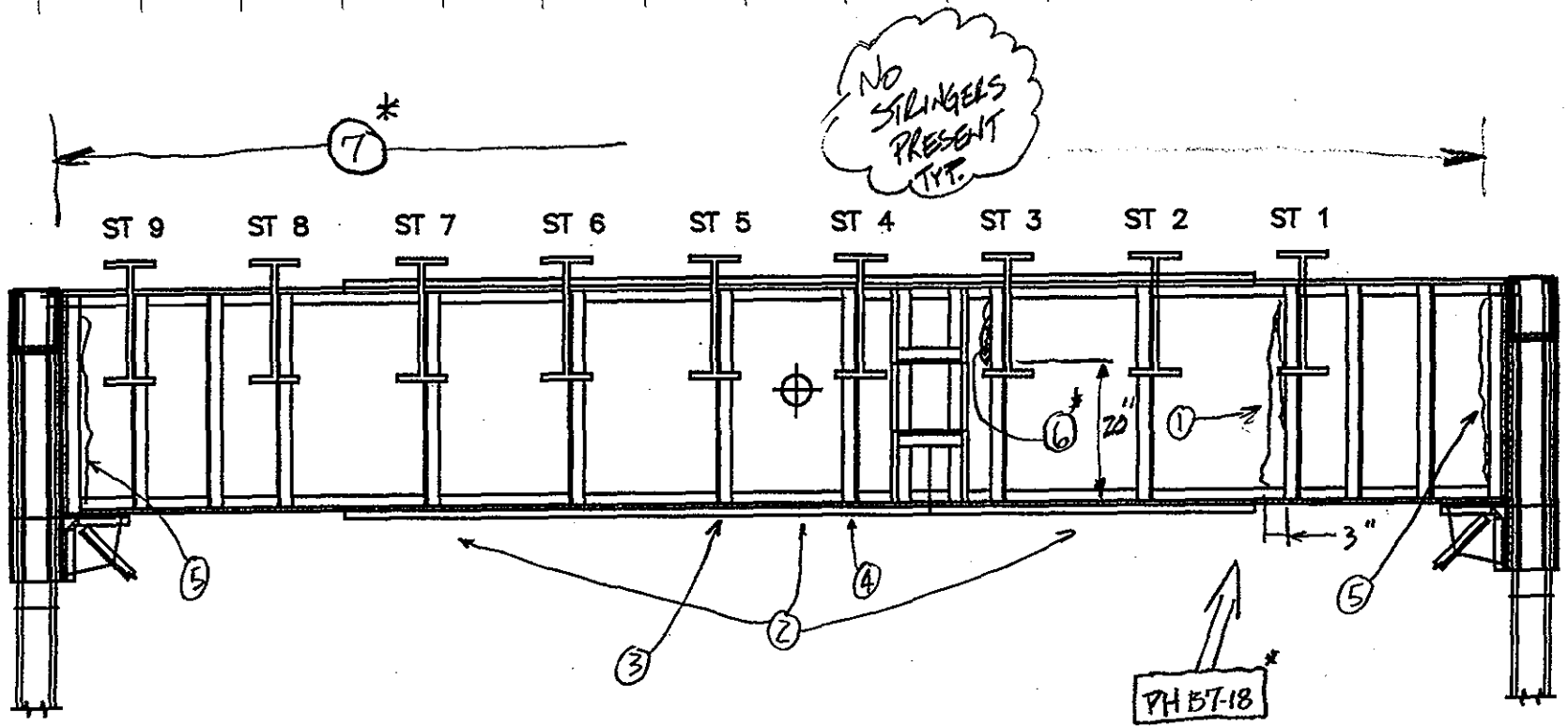

7* EXCESSIVE JOINT LEAKAGE IN THIS AREA IS CAUSING EXTENSIVE RUST STAINING ON WEB & LIGHT → MED RUST FORMING ON BOT/TOP FLG OF FLOORBEAM. PH B7 16 & 17

SPAN 5
FLOORBEAM 8 N ELEV.

NOTES:

1. UP TO 1/4" PITT x 3" W x F.H. FLBM WEB PH B7-18
2. LT-MED RUST ON FLMB BOT FL.
3. RANDOM LOCATIONS OF (IR) BTWN BOT. FL. FLBM & COV. PL (≈ 1/4")
4. 1/8" REM. ON OUTSIDE 1" OF COV. PL. - 3" LONG.
5. LT RUST @ CONN. L'S TO TRUSS
6. 1/4" PITTING (2'H x 1 1/2" WIDE) - 20" FROM BOT FLG

* (3/22/96 GG/WM)

FLOORBEAM

DEPARTMENT OF THE ARMY
NEW ENGLAND DIVISION CORPS OF ENGINEERS

BOURNE HIGHWAY BRIDGE
ROUTINE INSPECTION

NOTES BY: LICHTENSTEIN CONSULTING ENGINEERS

JOB #1784 | DATE: 3/18/96
CREW: WM, GG | SHEET 8 OF 19

66 219

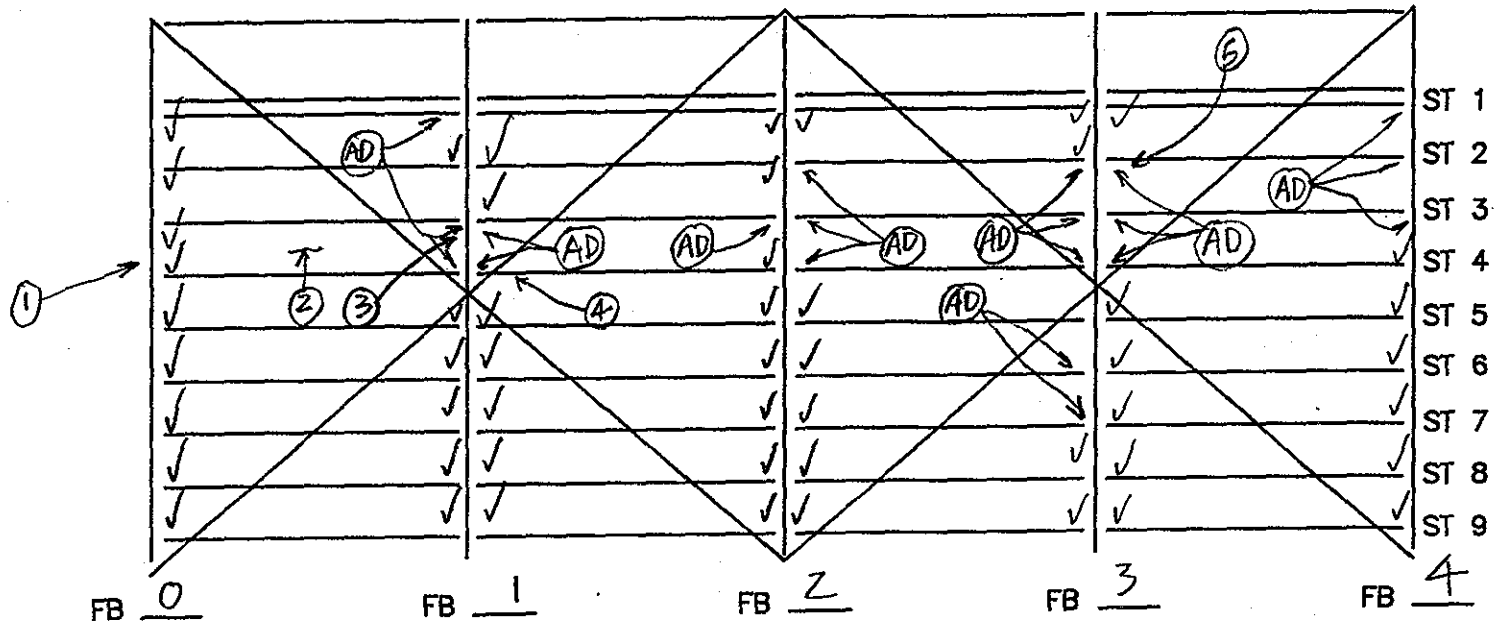

SPAN 3

NOTES:

1. EXCESSIVE JOINT BANGING UNDER LIVE LOAD
2. LOOSE CATWALK GRATING
3. 1 - (MB) ON CATWALK GUARD ANGLE - WEST SIDE - (NON-SUPPORTING ANGLE
4. U-BOLT BRACKET BROKEN ON CONDUIT HANDRAIL
5. REPAIR PL - 10" HIGH WELDED TO CONN. ANGLE @ BOT. FL. OF FLBM

FLOOR SYSTEM	
DEPARTMENT OF THE ARMY NEW ENGLAND DIVISION CORPS OF ENGINEERS	
BOURNE HIGHWAY BRIDGE ROUTINE INSPECTION	
NOTES BY: LICHTENSTEIN CONSULTING ENGINEERS	
JOB #1784	DATE: 3/18/96
CREW: WM, GG	SHEET 1 OF 19

Z

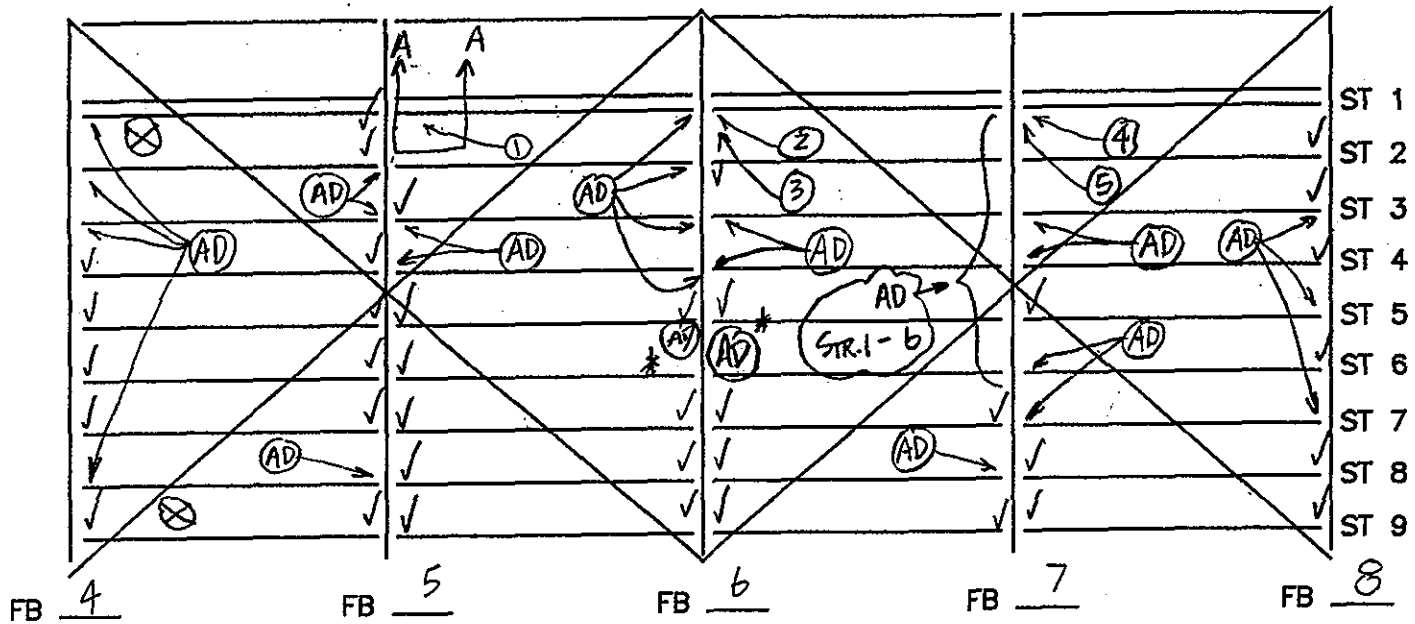

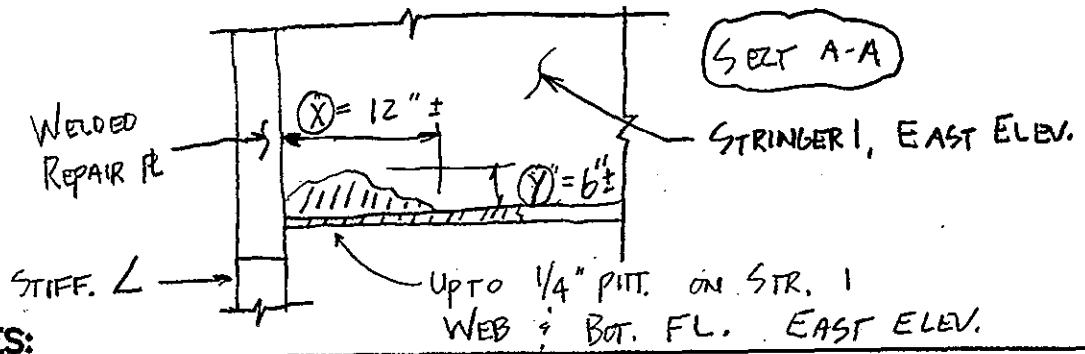

⊗ = DOWNSPOUT

SPAN 3

NOTES:

1. 1/4" PITT. x 6" HIGH ON EAST ELEV. OF STIFFENER ANG. @ BOT. FL.
2. SIM. TO COND 1 EXCEPT X = 14" Y = 9"
3. 10" HIGH - WELDED REPAIR PL TO BOT. OF STIFF. ANGLE *
4. SIM. TO COND 1 EXCEPT X = 12" Y = 12" PH B7-20,21 *
5. WELDED REPAIR PL TO STIFF. 40" ± HIGH STARTS @ BOT. FL.

* PH B7-19

* (GG/WM 3/22/96)

FLOOR SYSTEM	
DEPARTMENT OF THE ARMY NEW ENGLAND DIVISION CORPS OF ENGINEERS	
BOURNE HIGHWAY BRIDGE ROUTINE INSPECTION	
NOTES BY: LICHTENSTEIN CONSULTING ENGINEERS	
JOB #1784	DATE: 3/18/96
CREW: WM, GG	SHEET 2 OF 19

68
219

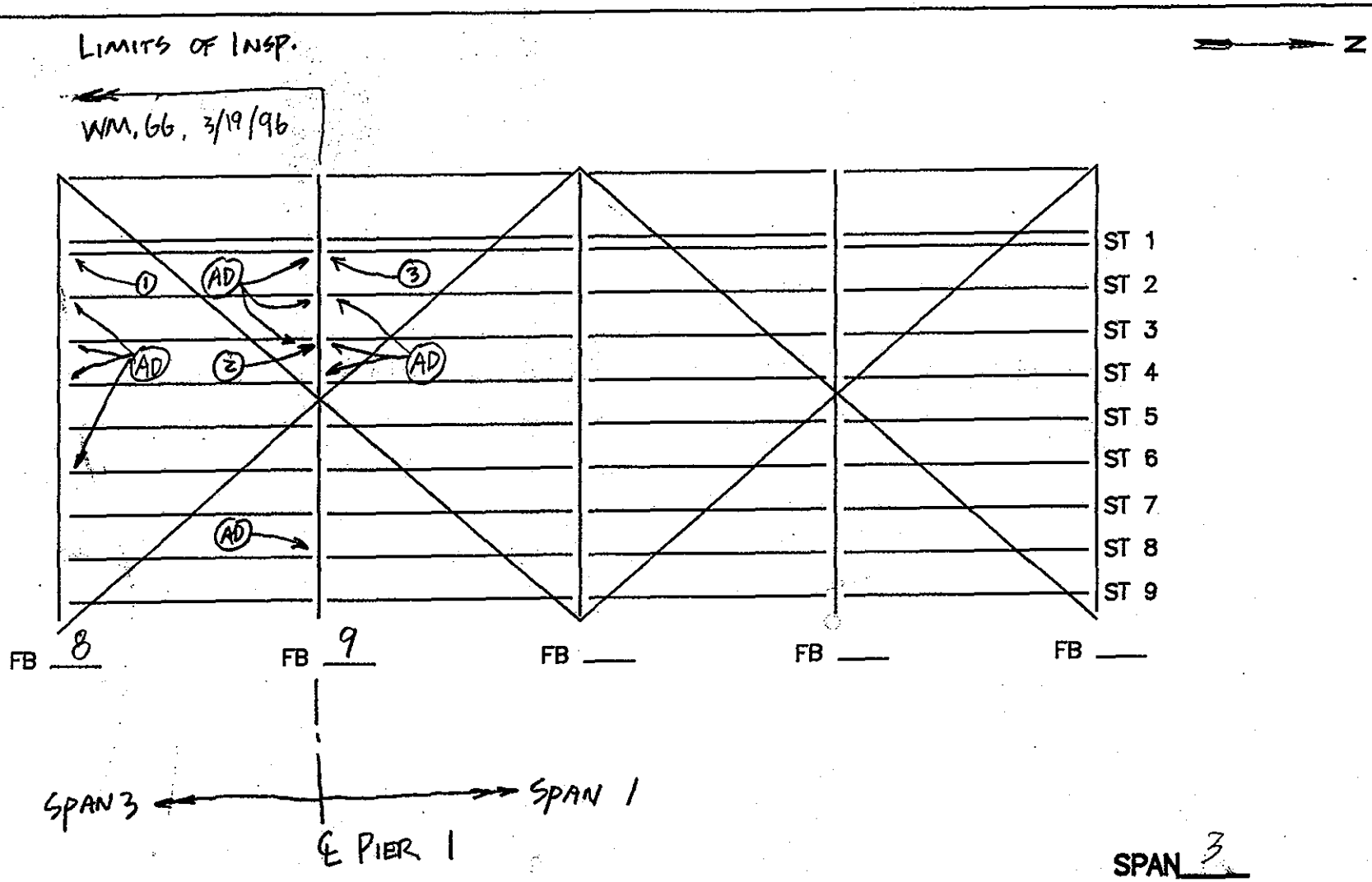

SPAN 3

NOTES:

1. UP TO 1/4" PITT. X 2" HIGH ON STR. WEB (EAST EL.) @ BOT. FL OF STR.
2. SAME FSD DETAIL AS FLBM 8, PIER 5, SPAN 7 STR. 3, EAST EL.
3. SIM: TO COND 1

FLOOR SYSTEM

DEPARTMENT OF THE ARMY
NEW ENGLAND DIVISION CORPS OF ENGINEERS

BOURNE HIGHWAY BRIDGE
ROUTINE INSPECTION

NOTES BY: LICHTENSTEIN
CONSULTING ENGINEERS

JOB #1784	DATE: 3/18/96
CREW: WM, GG	SHEET 3 OF 19

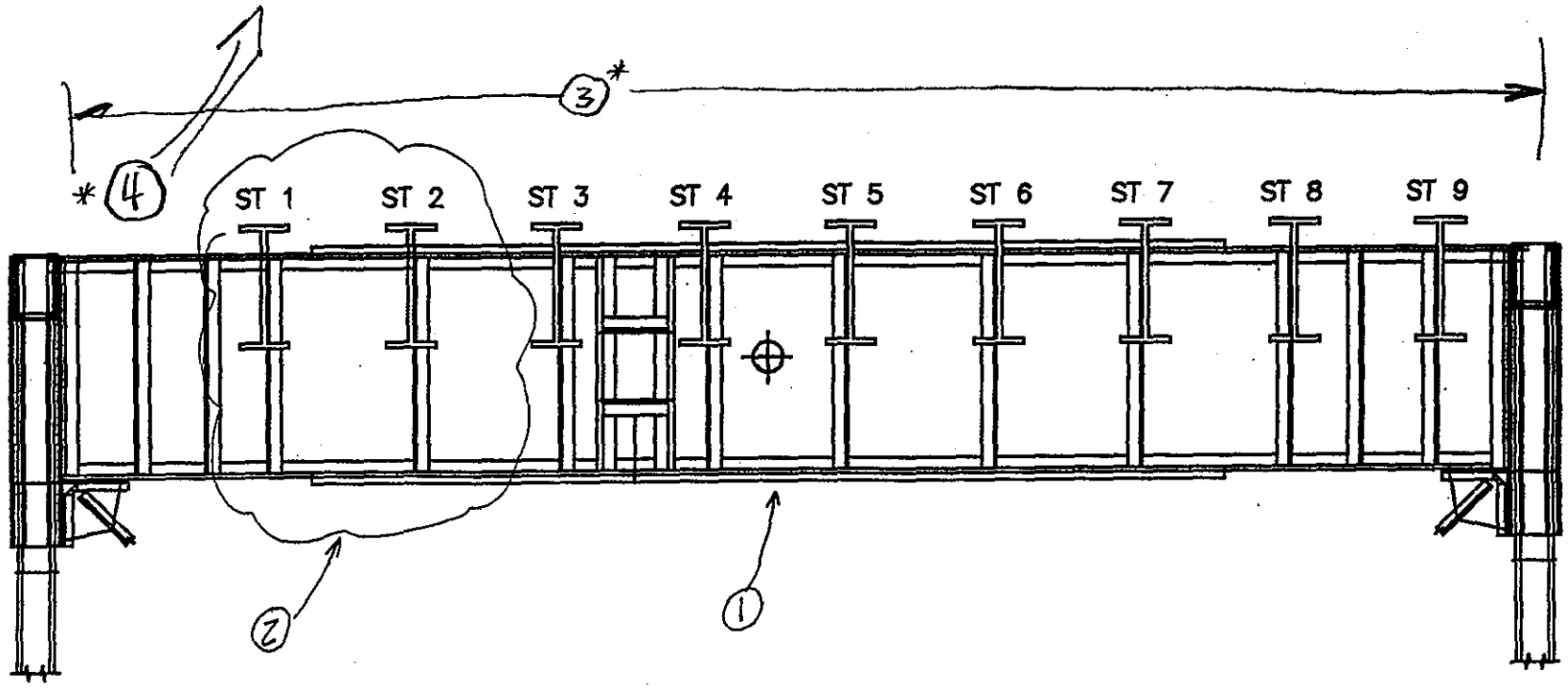

SPAN 3
FLOORBEAM 0 S ELEV.

NOTES:

① SIM. COND. TO FLBM 8, SPAN 5, N. ELEV. COND'S ② ③ ④ & ⑤
② HVY RUST STAINING - NO. 1 RUST FORMING
★ ③ EXCESSIVE JOINT LEAKAGE IN THIS AREA IS CAUSING EXTENSIVE RUST STAING, & LT → MED RUST ON FB T & B FLG [PHB7 14&15]
★ ④ EXCESSIVE "BANGING" NOIGE COMING FROM DECK JOINT. CAN NOT VERIFY SOURCE DUE TO BOTTOM PLS COVERING JOINT
* (3/22/96 GG/WM)

FLOORBEAM	
DEPARTMENT OF THE ARMY NEW ENGLAND DIVISION CORPS OF ENGINEERS	
BOURNE HIGHWAY BRIDGE ROUTINE INSPECTION	
NOTES BY: LICHTENSTEIN CONSULTING ENGINEERS	
JOB #1784	DATE: 3/18/96
CREW: WM, GG	SHEET 4 OF 19

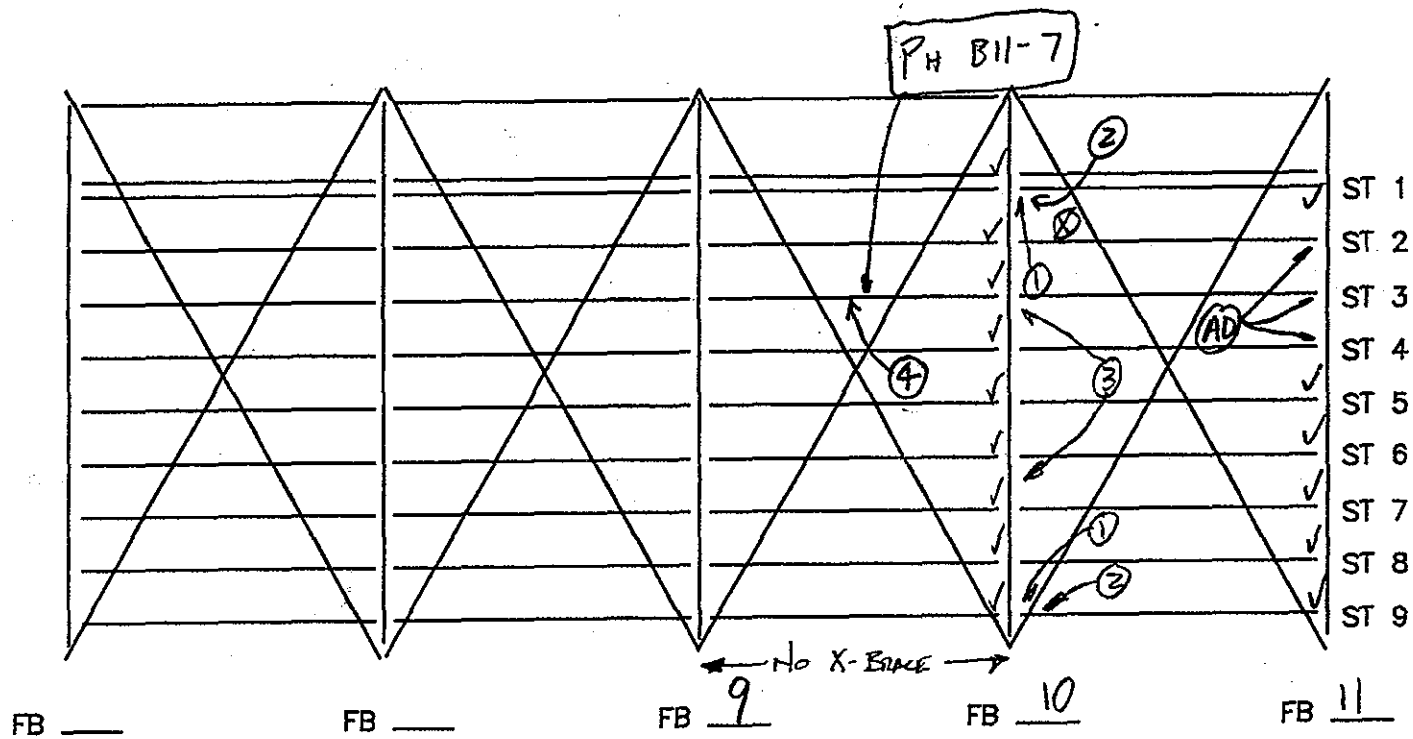

SPAN 1

NOTES:

1. MED RUST ON KNEE BRACE ? STR 1
2. 1/8" PITT. ON WEB OF STR 1 UP TO HALF HGT W/ 1/8" x 3" ϕ ON TOP OF BOT FE. NEAR DOWN SPOUT
3. RANDOM 1/8" PITT x UP TO 4" ϕ - N. ELEV.
4. 5/16" REM x 1" WIDE ON BOT. FL. OF STR 3 - MIDSPAN EAST SIDE. W/ RANDOM 1/8" PITT. UP TO 1" ϕ FOR ≈ 18" PH B11-7

FLOOR SYSTEM

DEPARTMENT OF THE ARMY
NEW ENGLAND DIVISION CORPS OF ENGINEERS

BOURNE HIGHWAY BRIDGE
ROUTINE INSPECTION

NOTES BY: LICHTENSTEIN
CONSULTING ENGINEERS

JOB #1784	DATE: 3/27/96
CREW: WM, JB	SHEET 5 OF 6

71 219

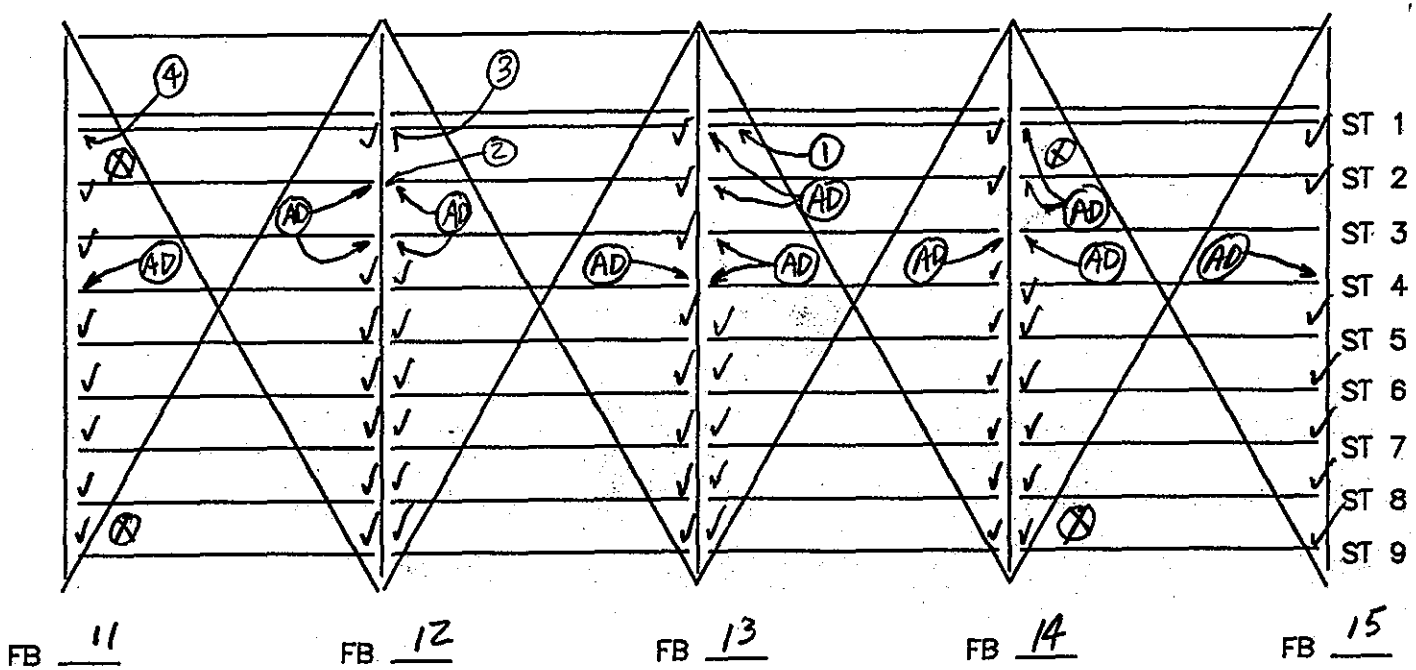

⊗ = Downspout

SPAN 1

NOTES:

① UP TO 1/8" PITT. X 3" H X 5" L @ BOT. OF WEB @ END OF BOT. FE NEAR COPE. W. ELEV - S. END OF STR 1

② UP TO 1/4" PITT. X 5" ⌀ TOP OF BOT. FE - FLBM 12 N. ELEV. UNDER STR 2

③ 1/8" PITT X 1" H. @ BOT. OF WEB - W. SIDE STR 1 @ CONN L FOR 8" L

④ SIM TO COND ③.

FLOOR SYSTEM

DEPARTMENT OF THE ARMY
NEW ENGLAND DIVISION CORPS OF ENGINEERS

BOURNE HIGHWAY BRIDGE
ROUTINE INSPECTION

NOTES BY: LICHTENSTEIN CONSULTING ENGINEERS

JOB #1784	DATE: 3/27/96
CREW: WM. JB	SHEET 4 OF 6

72
219

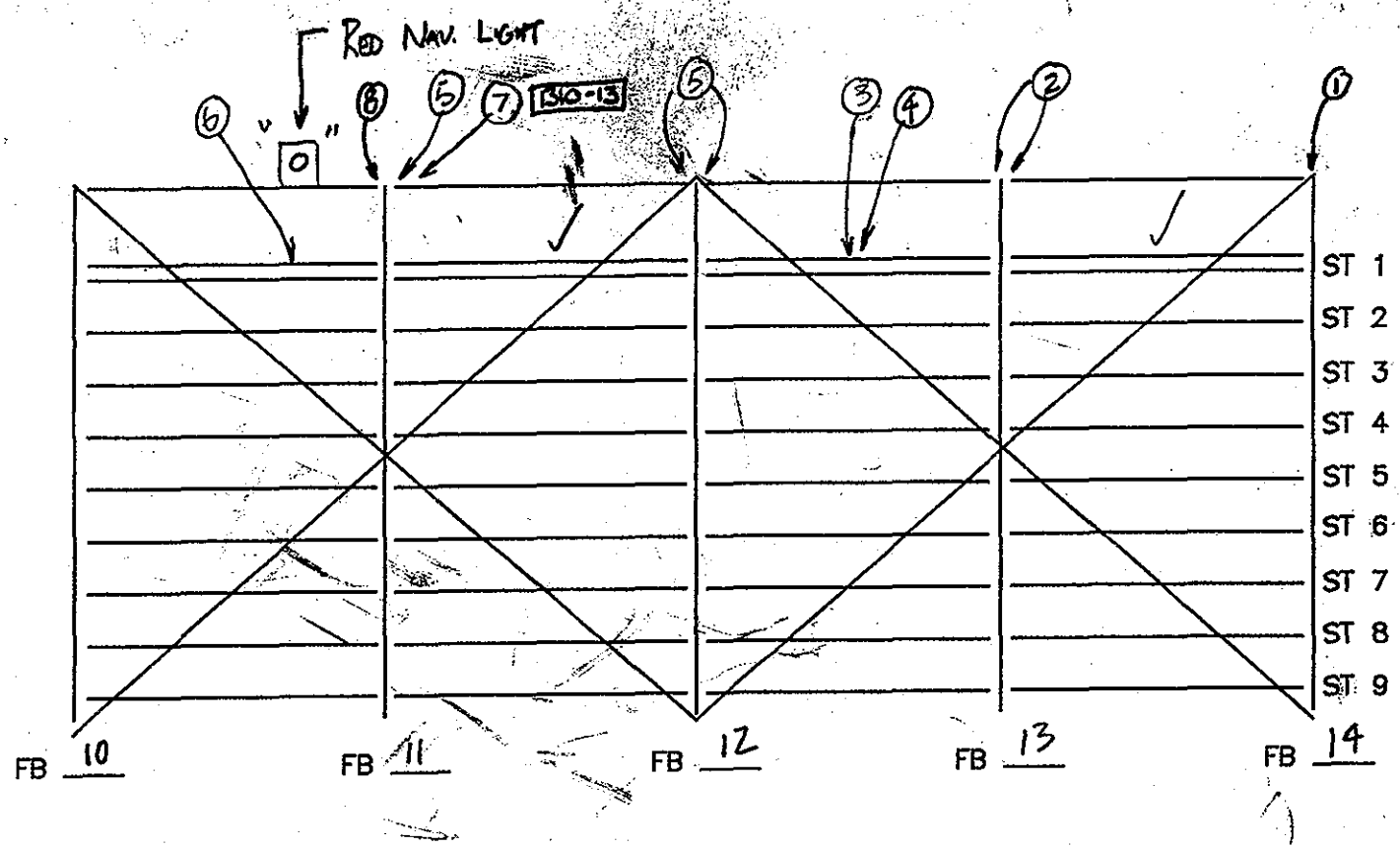

TYPICAL:
SIDEWALK FASCIA STRINGERS → 1/16" PITT. FULL HEIGHT EXTERIOR WEB ALONG EDGES OF RAILING CONNECTIONS.

SPAN 1

NOTES:
1. 100% LOSS - BOT. RIV. HD OF INT CONN L OF HANGER ASSM'Y - FLBM CONN. MED - HVY RUST
2. MED - HVY RUST ON INT. OF CONN L " " " " " "
3. UP TO 1/4" x F.W. OF BOT FL. WEST SIDE OF STR 1 ≈ 10' NEAR MID-SPAN
4. UP TO 1/8" PITT x 1" H x ≈ 20' @ BOT. OF WEB - WEST SIDE OF STR 1
5. SIM TO COND 1 W/ UP TO 1/8" PITT. ON BOT. OF INT. CONN L.
6. UP TO 3/16" PIT. x 2" H x 2' LONG @ BOT OF WEST WEB STR 1 NEAR MID SPAN.
7. 1/8" GAP x 7" H. ON N. HANGER CABLE → 8 TWH STRANDS
8. SIM TO COND 2 - EXCEPT LT - MED RUST.

FLOOR SYSTEM	
DEPARTMENT OF THE ARMY NEW ENGLAND DIVISION CORPS OF ENGINEERS	
BOURNE HIGHWAY BRIDGE ROUTINE INSPECTION	
NOTES BY: LICHTENSTEIN CONSULTING ENGINEERS	
JOB #1784	DATE: 3/25/96
CREW: WM, PWN	SHEET 3 OF 3

73
219

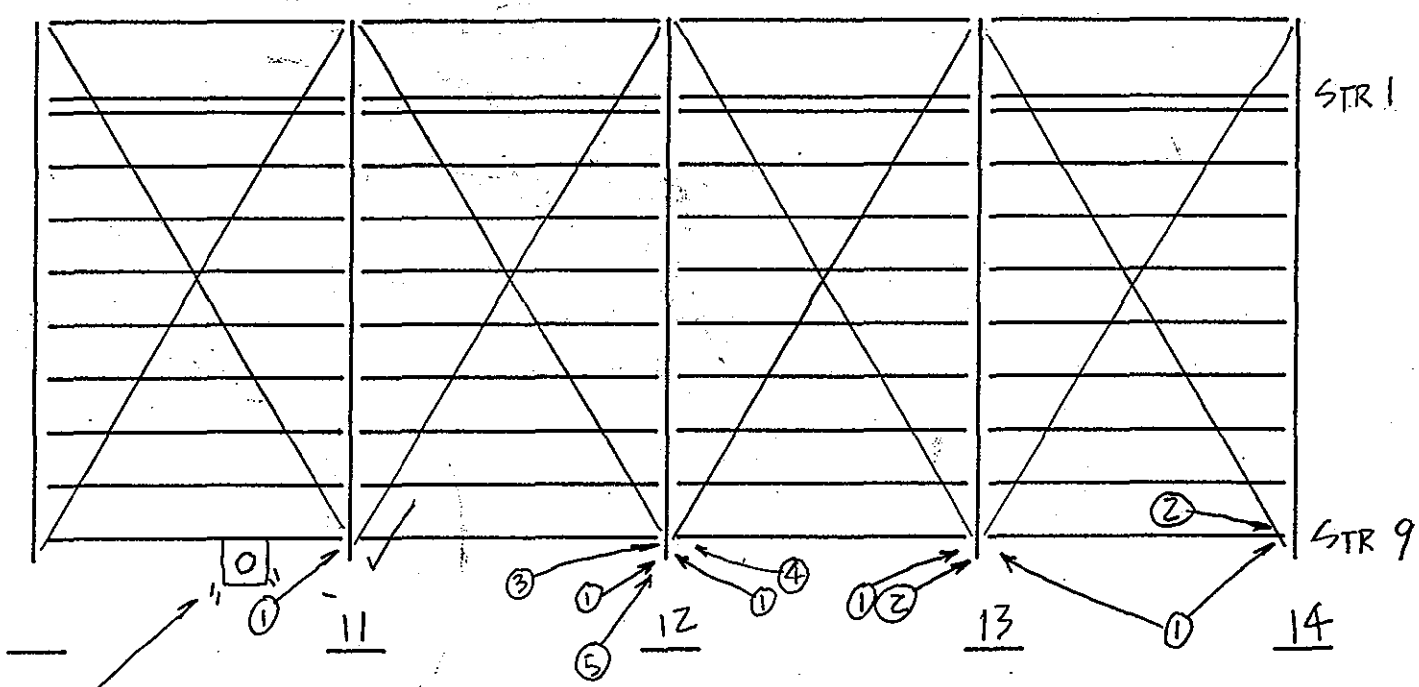

Typ. NOTES:
- LT-MED DEBRIS ACCUMULATING ON TOP OF ANCHOR/SOCKET
- LT RUST ON LESS THAN 20% OF SURFACE AREA @ END OF FLOORBEAM & CABLE HANGER ASSEMBLY.

SPAN 1

NOTES:

1. HVY. RUST ON BOT. TWO RIV. HD. & INT. CONN L OF HANGER ASSM'Y - RIV. HD'S MUSHROOMED
2. 100% LOSS ON BOT. RIV. HD. - OF INT. CONN L " " "
3. 1/4" PIT. 3 1/2"L x 5"W BOT. OF TOP TE - HORIZ. LEG - S. ELEV. ≈ 18" WEST OF S. CABLE
4. 1/16" GAP IN OUTER STRAND FOR ABOUT 6" LONG
5. MINOR PAINT FLAKING ≈ 12" LONG ON S. CABLE

FLOOR SYSTEM	
DEPARTMENT OF THE ARMY NEW ENGLAND DIVISION CORPS OF ENGINEERS	
BOURNE HIGHWAY BRIDGE ROUTINE INSPECTION	
NOTES BY: LICHTENSTEIN CONSULTING ENGINEERS	
JOB #1784	DATE: 3/26/96
CREW: WM, PWN	SHEET 3 OF 3

74
219

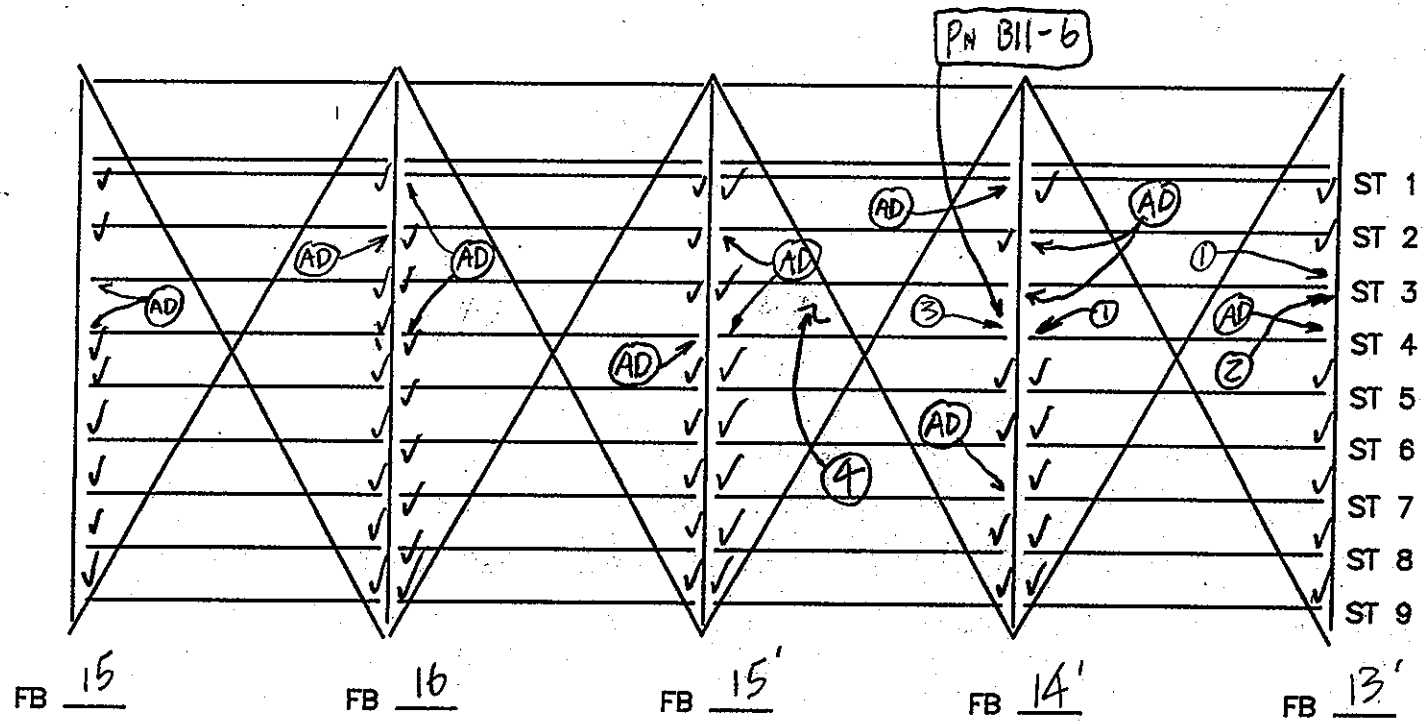

219 75

SPAN 1

NOTES:

1. FLAME CUT COPE BOT. FL.
2. 1/8" PLTT x 3"L x 1"W ON TOP OF BOT. LOWER PL.
3. 1 - (LB) OUT OF 2 CATWALK GUARDRAIL CONN. TO FLBM. PN B11-6
4. LOOSE GRATING PANEL

FLOOR SYSTEM

DEPARTMENT OF THE ARMY
NEW ENGLAND DIVISION CORPS OF ENGINEERS

BOURNE HIGHWAY BRIDGE
ROUTINE INSPECTION

NOTES BY: LICHTENSTEIN CONSULTING ENGINEERS

JOB #1784	DATE: 3/27/96
CREW: WM, JB	SHEET 3 OF 6

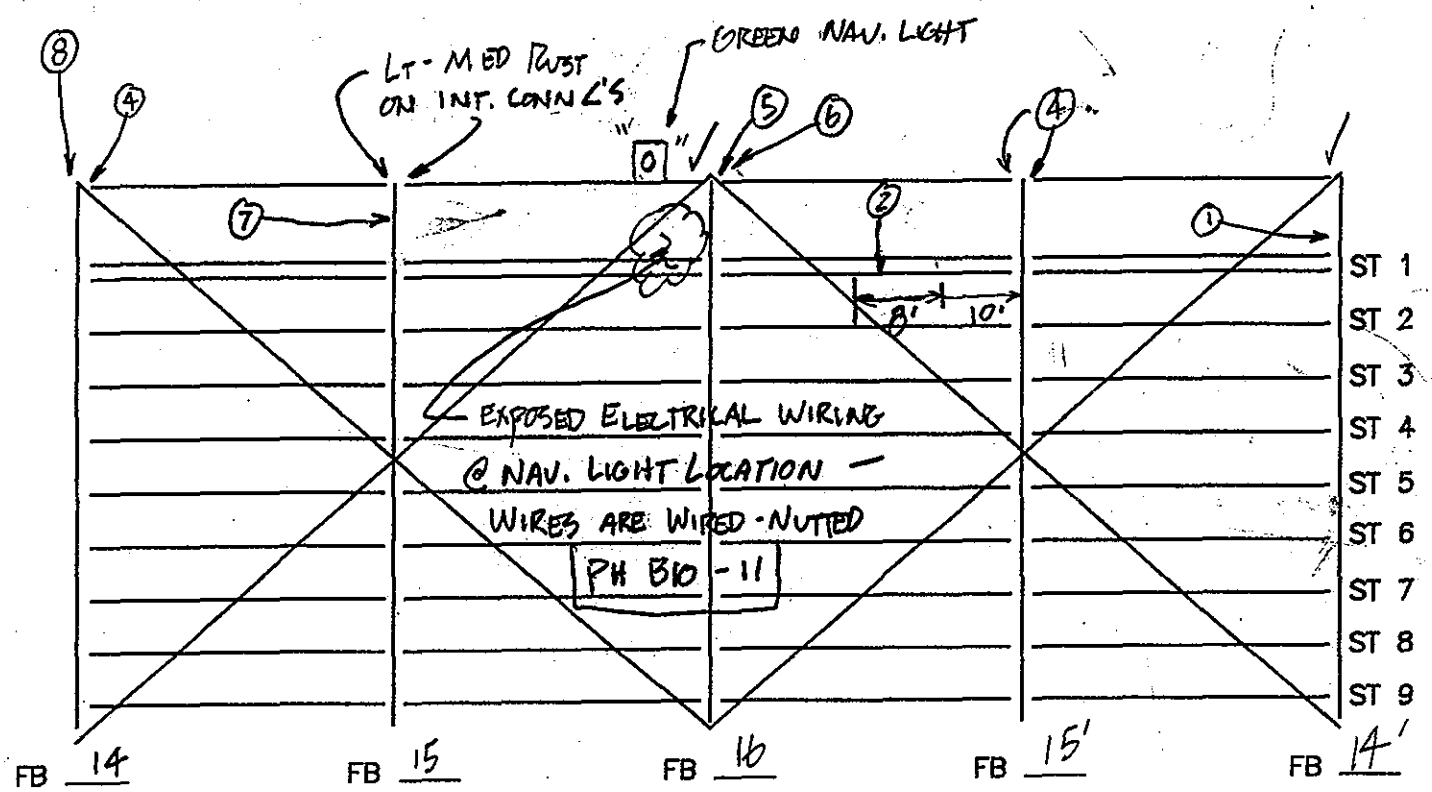

219 96

TYPICAL: SIDEWALK FASCIA STRINGERS, 1/16" PITT. FULL HEIGHT EXTERIOR WEB ALONG EDGES OF RAILING CONNECTIONS

(8) 1-(MB) OUT OF 2, ON WEST SIDE OF BOTTOM BRACKET FOR ANTI-MISSILE FORCE.

SPAN 1

NOTES:

(1) 1/4" PIT. x 1"W x 2"H - ≈ 9" UP FROM TOP OF VERT LEG. BOT FL. OF FL BM - S. EL. - 3' WEST OF STR 1.

(2) UP TO 3/16" PIT. x 1 1/2"H. WEST WEB STR 1 - NEAR 1/3 PT. OF STR - SOUTH OF FB 15'

(3) 1/4" PIT. x F.W. OF BOT. FL. WEST SIDE STR 1. SAME LOC. AS COND (2) FOR 8' OF STR

(4) MED-HVY RUST ON INT. CONN L OF HANGER ASSM'Y TO FLBM - N & S. FACES.

(5) 1/8" PITT. ON N. FACE OF INT. CONN L @ BOT. OF HANGER ASSM'Y TO FLBM CONN.

(6) BOT. 2 RIVETS MUSHROOMED @ BOT. OF INT. CONN L - S. FACE MED RUST

(7) SCATTERED PITTING - LARGEST AREA 1" Φ x 3/16" PITT. ≈ 4" UP FROM TOP OF VERT. LEG. OF BOT. FL.

FLOOR SYSTEM

DEPARTMENT OF THE ARMY
NEW ENGLAND DIVISION CORPS OF ENGINEERS

BOURNE HIGHWAY BRIDGE
ROUTINE INSPECTION

NOTES BY: LICHTENSTEIN CONSULTING ENGINEERS

JOB #1784 | DATE: 3/25/96

CREW: WM, PWN | SHEET 2 OF 3

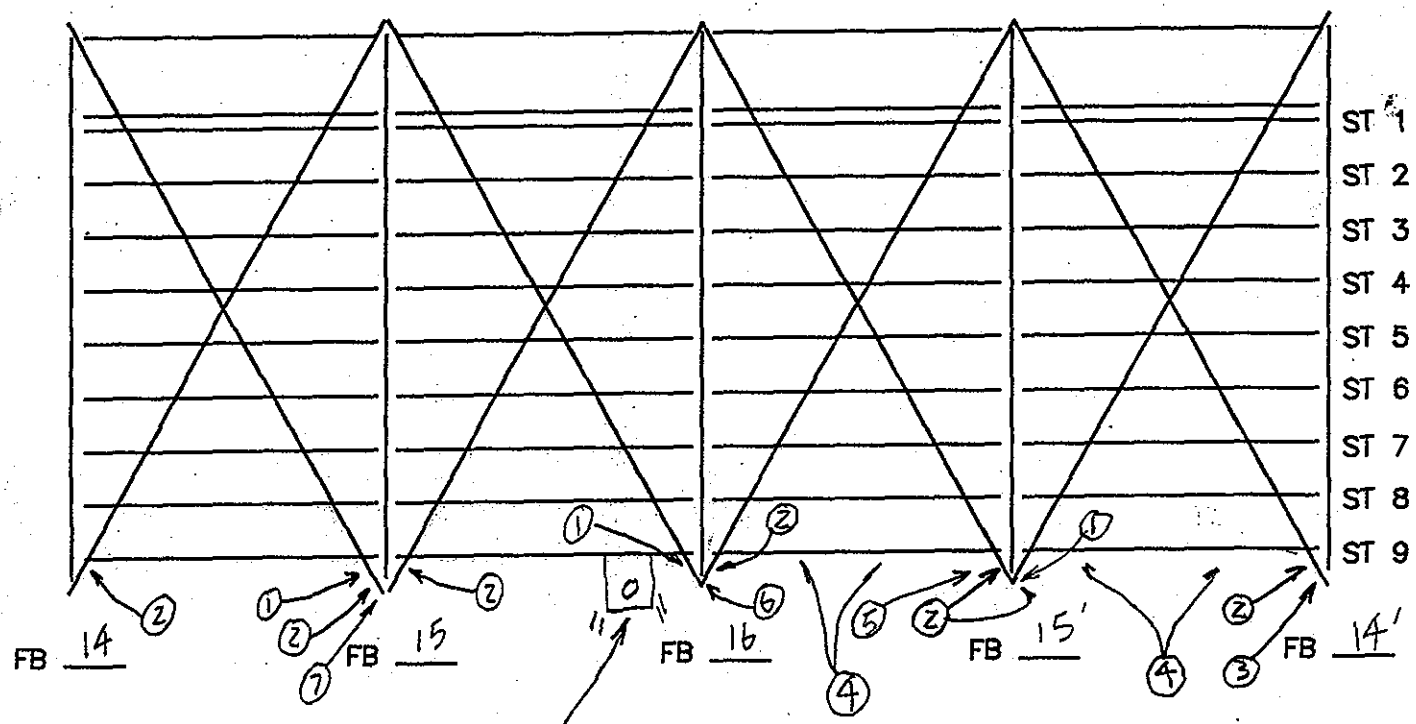

Typ. NOTES: • LT-MED DEBRIS ACCUMULATING ON TOP OF ANCHOR/SOCKET
• LT RUST ON LESS THAN 20% OF SURFACE AREA @ END OF FLOORBEAM & CABLE HANGER ASSEMBLY

SPAN 1

NOTES:

1. UP TO 1/8" PITT. ON INT CONN ∠ @ HANGER ASSM'Y TO FLBM CONN.
2. HVY RUST ON BOT. TWO RIV. HD @ INT. CONN ∠ OF HANGER ASSM'Y - RIV. HD. MUSHRD
3. UP TO 1/16" GAP IN OUTER STRAND OF CABLE - S. SIDE JUST ABOVE SOCKET ASSM'Y.
4. UP TO 1/8" PITT. BTWN TOP 10" OF RAILING CONN ∠'S & CURB FASCIA CHANNEL, N. & S. FACES
5. MINOR PAINT LOSS ON S. CABLE - PAINT FLAKING OFF FOR ≈ 2' H
6. BOT. TWO RIVETS ON INT. CONN ∠ REPLACED W/ BOLTS
7. 100% LOSS ON BOT. RIV. HD @ BOT. OF INT. CONN ∠ -

FLOOR SYSTEM

DEPARTMENT OF THE ARMY
NEW ENGLAND DIVISION CORPS OF ENGINEERS

BOURNE HIGHWAY BRIDGE
ROUTINE INSPECTION

NOTES BY: LICHTENSTEIN
CONSULTING ENGINEERS

JOB #1784 | DATE: 3/26/96
CREW: WM, PWN | SHEET 2 OF 3

77
219

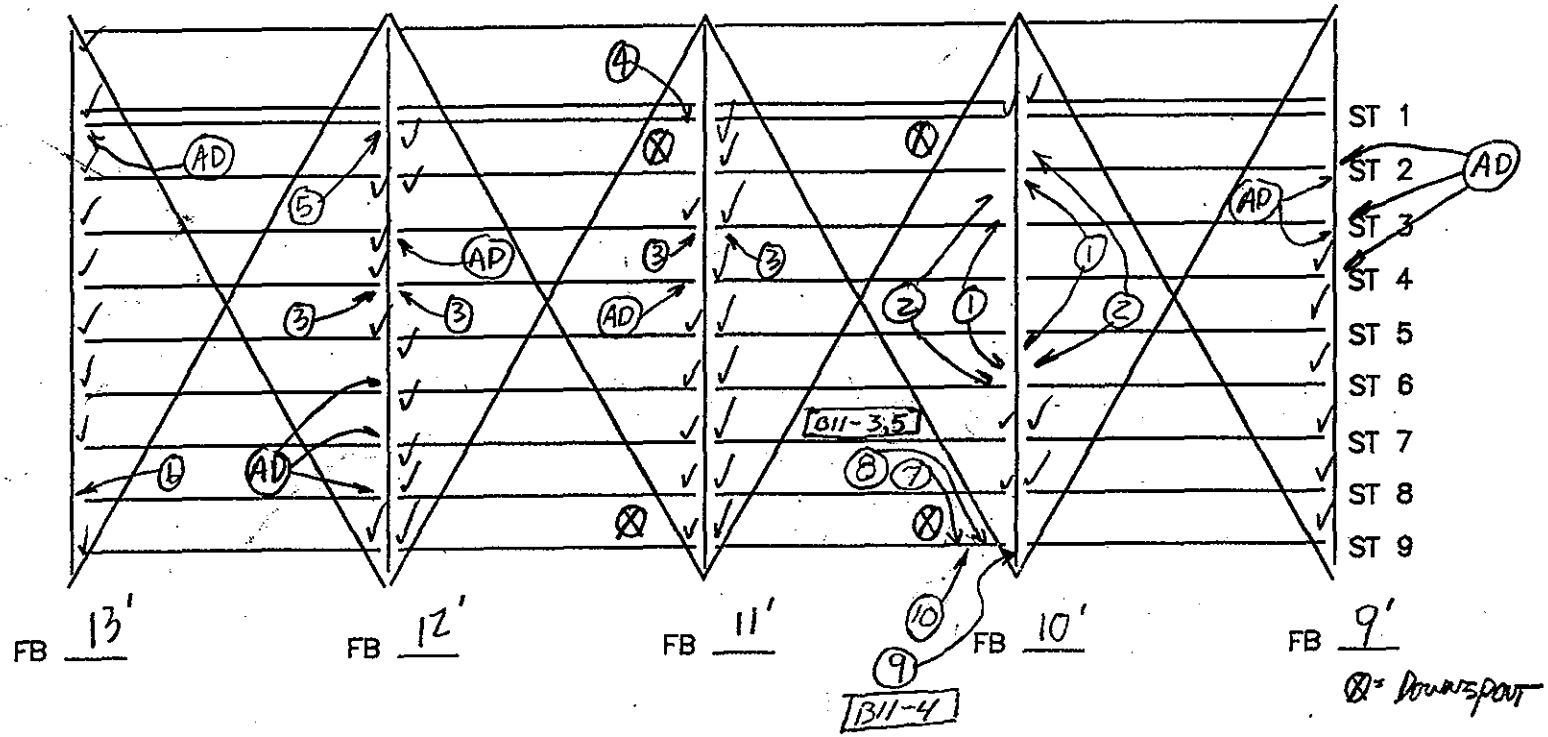

(10) 1/8" PITT. x FULL HGT. ON THE W. WEB, &
1/8 TO 3/16" PITT ON EAST SIDE OF STR. WEB x FULL HGT x 4" WIDE.

(9) PATCHES OF UP TO 1/4" x 1" ⌀ PITT. ON F.B. WEB.

SPAN 1

NOTES:

(1) KNEE BRACES UNDER STRINGERS PRESENT @ BOTH N. & S. ELEV. OF FB 10'
(2) SCATTERED 1/16" PITT. MAX. ON KNEE BRACES - LT RUST PRESENT @ TOP FE OF BRACES
(3) FLAME CUT COPE. BOT. FE.
(4) UP TO 1/8" PITT. ON TOP OF BOT. FL. x 2" ⌀ FOR 2' SOUTH OF FLBM 11'
(5) UP TO 1/8" PITT x 4" ⌀ @ BOT. OF STIFF. UNDER STR 1 EAST FACE W/ WELDED REPAIR PL.
(6) UP TO 3/16" PITT x F.V TOP OF BOT. FL UNDER STR. 8 N.E. COR. FLBM 13'
(7) 1/8 PITT & HVY RUST & SCALE ON STR. FLANGES (BOTH SIDES OF WEB)
(8) CORRODED BOLTS & RIVETS @ CONN. L'S., E. & W. SIDES OF STR. WEB.

PH B11-3,5

FLOOR SYSTEM	
DEPARTMENT OF THE ARMY NEW ENGLAND DIVISION CORPS OF ENGINEERS	
BOURNE HIGHWAY BRIDGE ROUTINE INSPECTION	
NOTES BY: LICHTENSTEIN CONSULTING ENGINEERS	
JOB #1784	DATE: 3/27/96
CREW: WM, JB	SHEET 1 OF 6

(218)

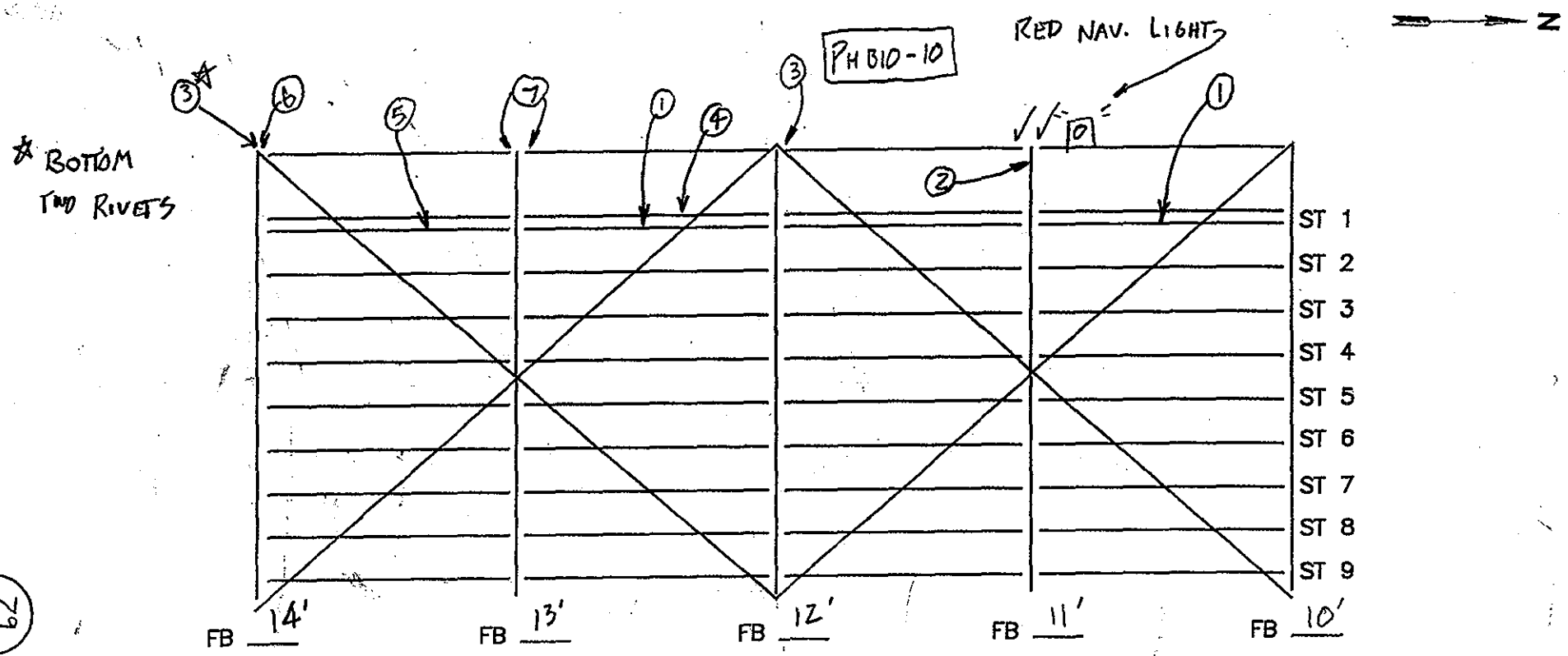

TYPICAL:

* SIDEWALK FASCIA CHANNELS 1/8" DEEP PITTING TYPICAL UPPER 8" OF EXTERIOR FACE WEB.
* " " " 1/8" DEEP PITTING FULL HEIGHT OF EXTERIOR WEB ALONG EDGES OF RAIL CONNECTIONS

SPAN 1

NOTES:

1. UP TO 3/16" PITT. x 1" H IN STR 1 - WEST WEB. @ BOT. FL. NEAR MID-SPAN
2. UP TO 1/4" PITT. x 9" H TOP OF VERT. LEG. OF BOT. FL. FLBM 11'
3. UP TO 100% LOSS ON BOT. RIV. HEAD - INSIDE HANGER ASMBL'Y. TO FLBM CONN. L'S.
4. UP TO 1/4" PITT. - F.W. BOT. FL. WEST SIDE STR 1 - ≈ 10' SOUTH OF FLBM 12'
5. SIM. TO COND 1 - EXPECT ≈ 1/8" PITT.
6. UP TO 1/8" PITT. ON N. FACE OF INT. CONN L OF HANGER ASSM'Y - 1" Φ x 1/4 PIT. - S. FACE
7. HVY RUST BOTH N. & S. FACES @ BOT. OF INT. CONN. L OF HANGER ASSM'Y VERT. L.

FLOOR SYSTEM	
DEPARTMENT OF THE ARMY NEW ENGLAND DIVISION CORPS OF ENGINEERS	
BOURNE HIGHWAY BRIDGE ROUTINE INSPECTION	
NOTES BY: LICHTENSTEIN CONSULTING ENGINEERS	
JOB #1784	DATE: 3/25/96
CREW: WM, PJH	SHEET 1 OF 3

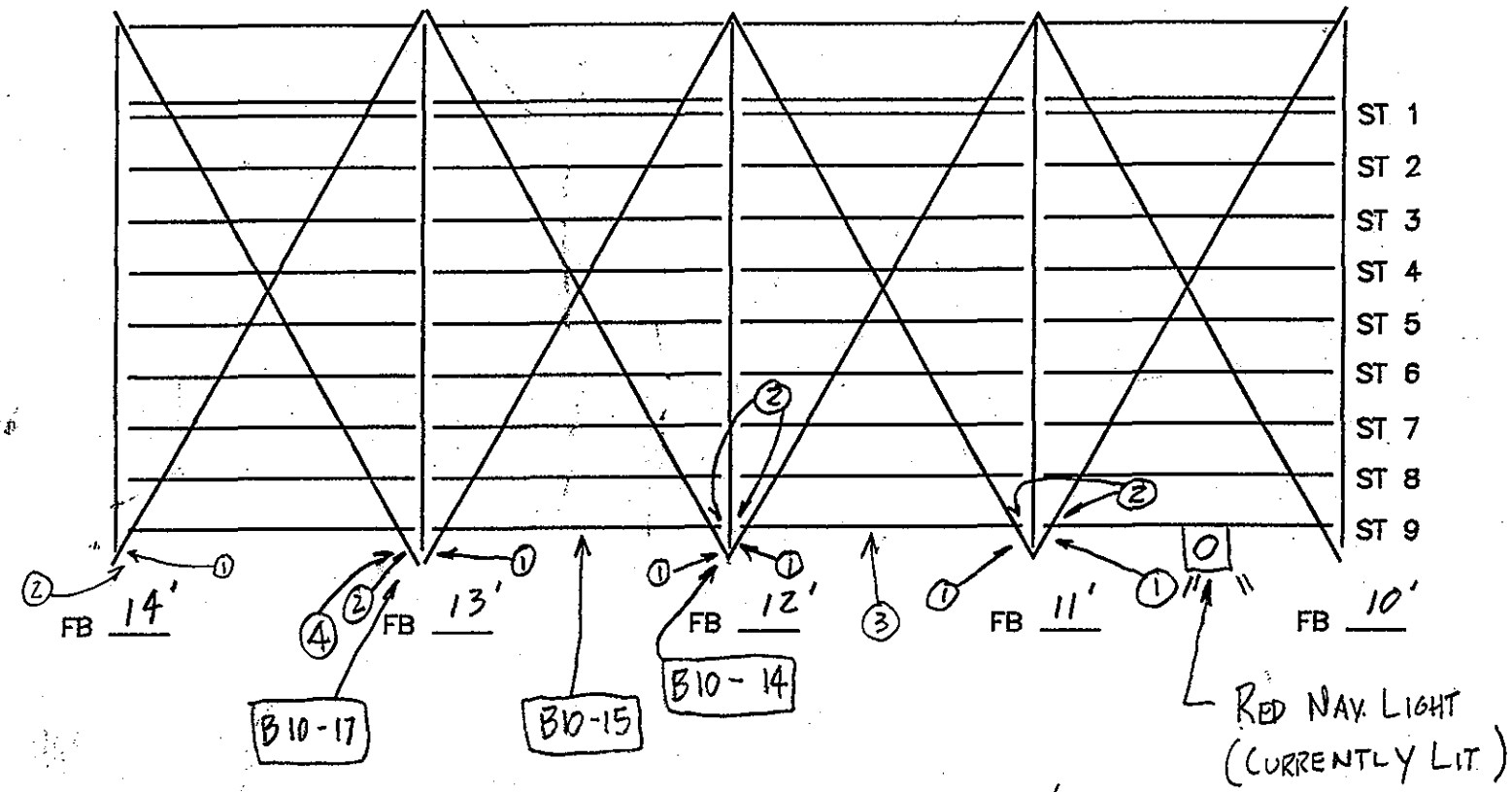

219

* TYP NOTE: • LT - MED DEBRIS ACCUMULATING ON TOP OF ANCHOR/SOCKET.
• LT RUST ON LESS THAN 20 % OF SURFACE AREA @ END OF FLOORBEAM & CABLE HANGER ASSEMBLY

SPAN 1

NOTES:

1. UP TO 1/8" PITT. ON INT. CONN L - HANGER ASSM'Y TO FLBM CONN N.'S FACES
2. HVY RUST ON BOTH BOT. RIV. HD. - MUSHROOMED RIVETS, @ BOT. OF INT. CONN L
3. UP TO 1/8" PITT. x ≈ 1" HIGH @ BOT. OF STR 9 WEB - EAST EL. NEAR MID-SPAN
4. UP TO 1/16" GAP IN OUTER STRAND - 2 LOCATIONS ≈ 8" APART - GAP IS ≈ 6" LONG

B10-17

FLOOR SYSTEM	
DEPARTMENT OF THE ARMY NEW ENGLAND DIVISION CORPS OF ENGINEERS	
BOURNE HIGHWAY BRIDGE ROUTINE INSPECTION	
NOTES BY: LICHTENSTEIN CONSULTING ENGINEERS	
JOB #1784	DATE: 3/26/96
CREW: WM, PWN	SHEET 1 OF 3

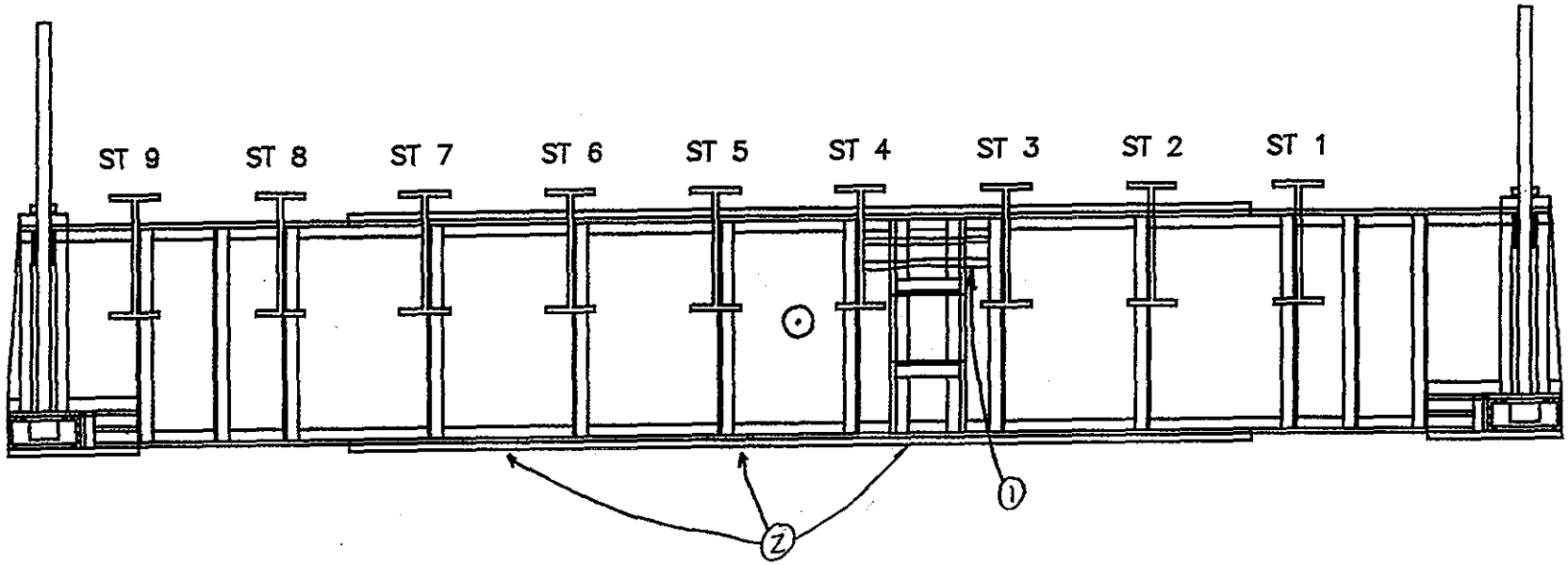

219

Typ. Notes- Lt-Med Rust w/ small areas of Hvy Rust in Areas of Str 1 & Str 9 Kneebrace & Flbm Conn. N. Side Only
Random 1/8"-3/16" pitt. in web of knee braces - N. elev. only.

NOTES:

1. Up to 3/16" pitt. on Bot. ft of Diap. Btwn Str 3 & Str 4 N. elev.
2. Random 1/8" pitt. on edges of Bot. Cover Pl. Typ. N & S. elev.

SPAN 1
FLOORBEAM 10 N ELEV.

FLOORBEAM

DEPARTMENT OF THE ARMY
NEW ENGLAND DIVISION CORPS OF ENGINEERS

BOURNE HIGHWAY BRIDGE
ROUTINE INSPECTION

NOTES BY: LICHTENSTEIN
CONSULTING ENGINEERS

JOB #1784	DATE: 3/27/96
CREW: WM / JB	SHEET 6 OF 6

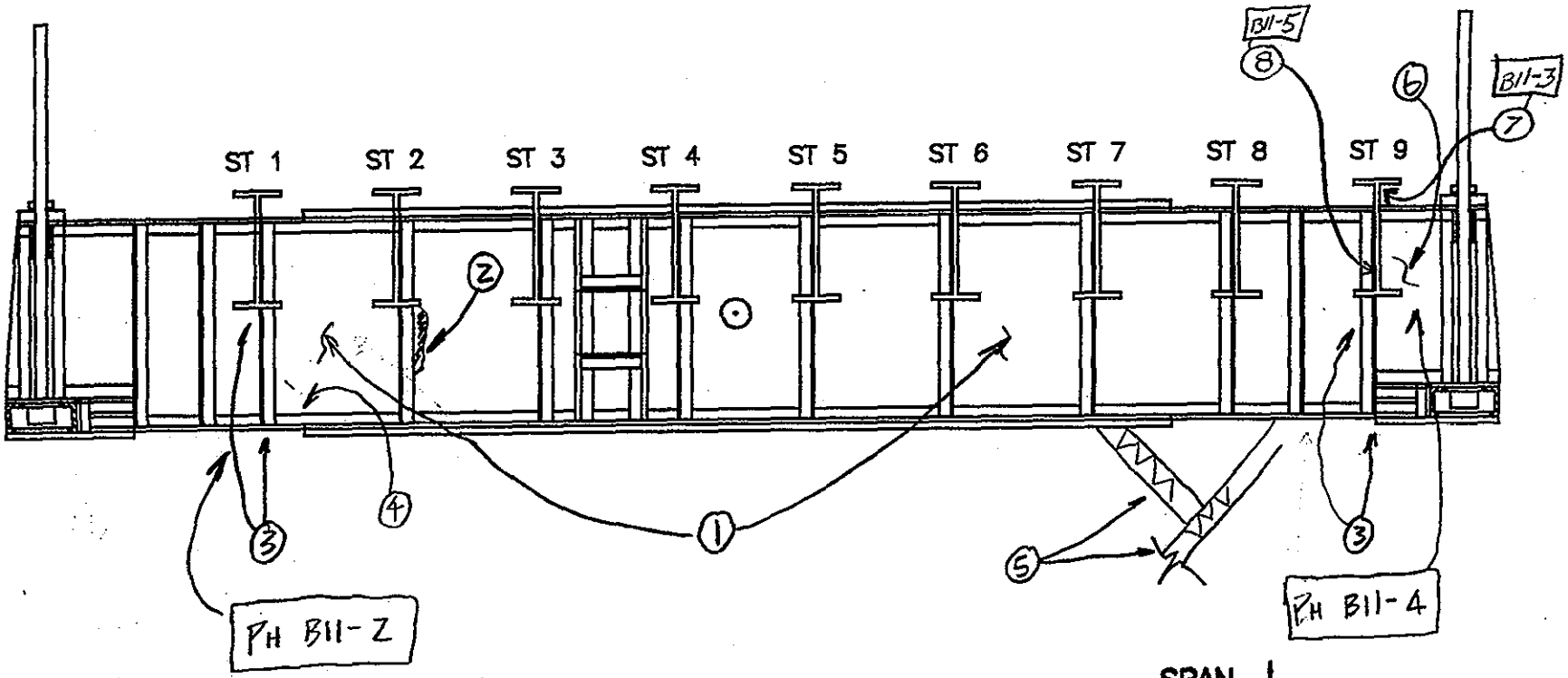

(8) HVY RUST & CORROSION @ FLR BM WEB & STR WEB.

SPAN 1
FLOORBEAM 10' S ELEV.

NOTES:

(1) RANDOM 1/16" PITT. - 5" Φ MAX
(2) UP TO 1/8" PITT. X 2" W X 12" L
(3) LT - MED RUST @ KNEE BRACE & FLBM WEB / STR CONN.
(4) MED - HVY RUST ON TOP OF BOT. FE BOTH E & W. SIDES OF STR 1.
(5) X - BRACING BELOW FB10' TYP. LT - MED RUST @ E & W ENDS - UNDER STR 1 & STR 9 - OVER 25 % OF SURFACE AREA @ THESE AREAS
(6) UP TO 1/4" PITT X 1" Φ IN S. WEB FLBM 10' E. OF STR 9 CONN. B11-4
(7) HVY RUST & PITT., E. WEB OF STR 9.

FLOORBEAM	
DEPARTMENT OF THE ARMY NEW ENGLAND DIVISION CORPS OF ENGINEERS	
BOURNE HIGHWAY BRIDGE ROUTINE INSPECTION	
NOTES BY: LICHTENSTEIN CONSULTING ENGINEERS	
JOB #1784	DATE: 3/27/96
CREW: WM, JB	SHEET 2 OF 6

B2 219

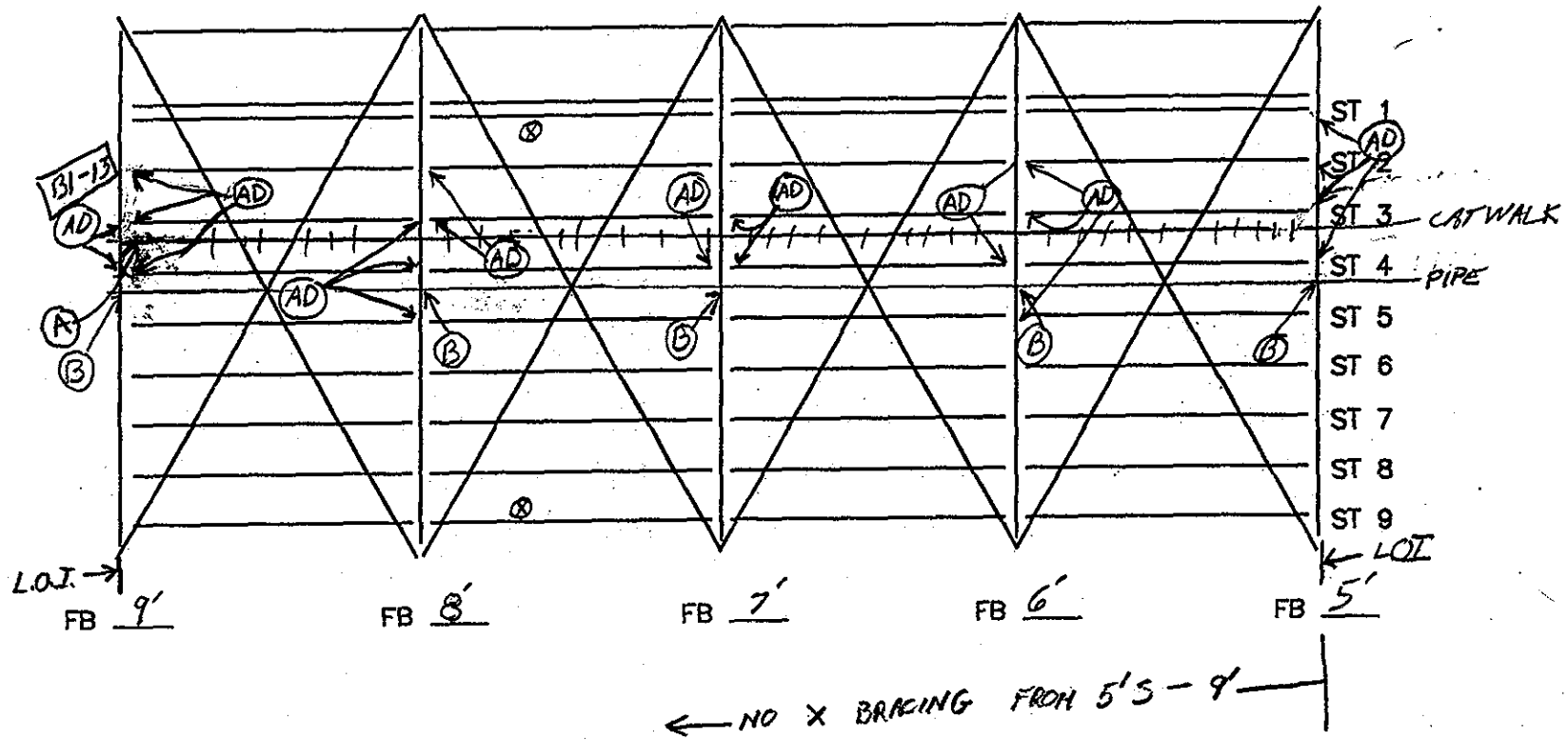

83
219

SPAN 2

⊗ DRAIN

NOTES: (A) LOOSE CATWALK GRATING
(B) PIPE SUPP ON ½ WELDED TO FLGM WEB

FLOOR SYSTEM	
DEPARTMENT OF THE ARMY NEW ENGLAND DIVISION CORPS OF ENGINEERS	
BOURNE HIGHWAY BRIDGE ROUTINE INSPECTION	
NOTES BY: LICHTENSTEIN CONSULTING ENGINEERS	
JOB #1784	DATE: 3/6/96
CREW: TF/EL	SHEET 3 OF 12

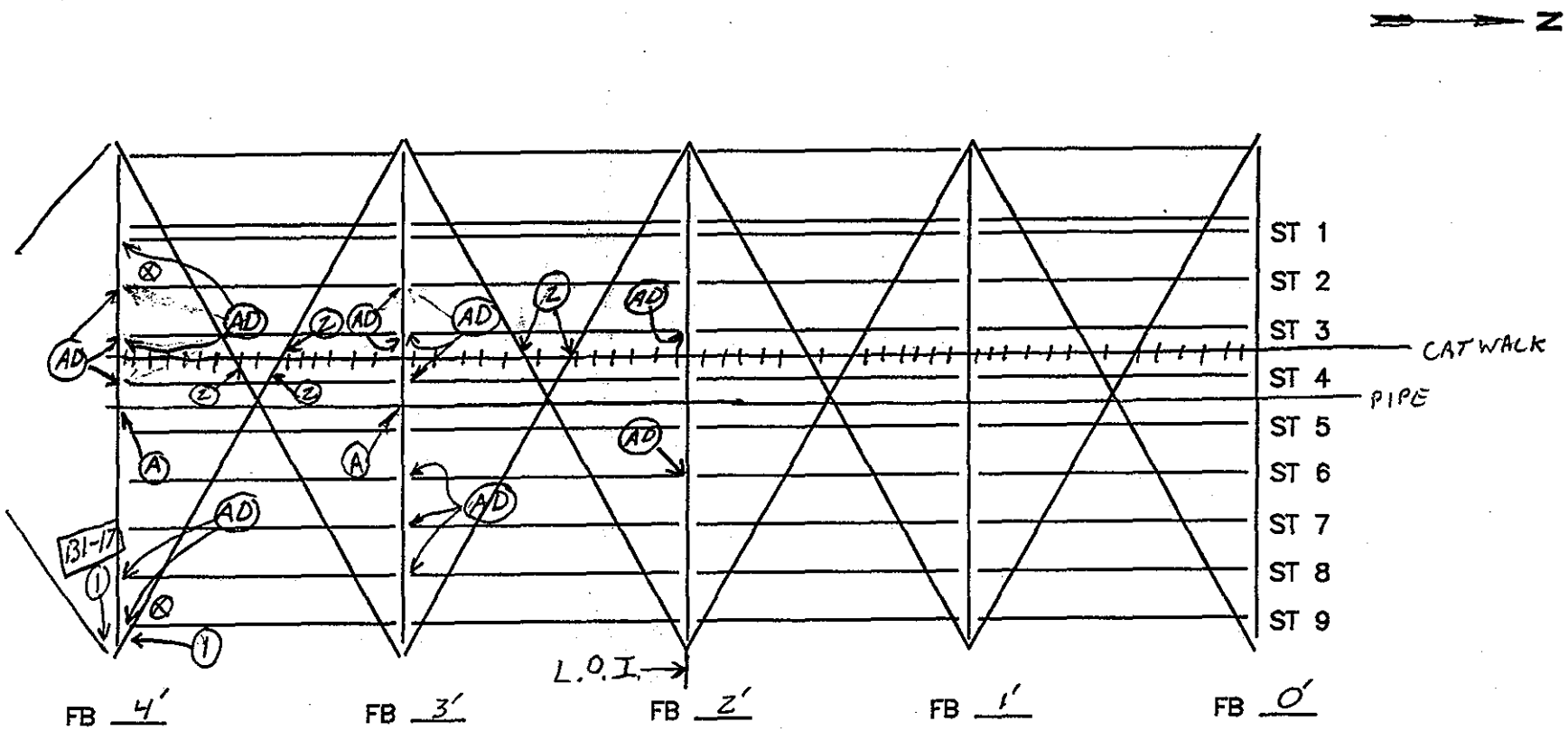

SPAN 2

NOTES:
⊗ DRAIN PIPE
(A) PIPE SUPP ON ∡ WELDED TO FLBM WEB
(1) 1/4" IR @ LAT X BRAC & GUS. PL
(2) (AD) BETWEEN RAILING AND X BRAC

FLOOR SYSTEM	
DEPARTMENT OF THE ARMY NEW ENGLAND DIVISION CORPS OF ENGINEERS	
BOURNE HIGHWAY BRIDGE ROUTINE INSPECTION	
NOTES BY: LICHTENSTEIN CONSULTING ENGINEERS	
JOB #1784	DATE: 3/6/96
CREW: TF, EL	SHEET 8 OF 12

NOTE: X-BRACING IS FULL X IN EACH BAY
HEAVY AD BETWEEN X-BRACE & CATWALK
RAILING IN BAY BETWEEN FB 0' & FB 1'

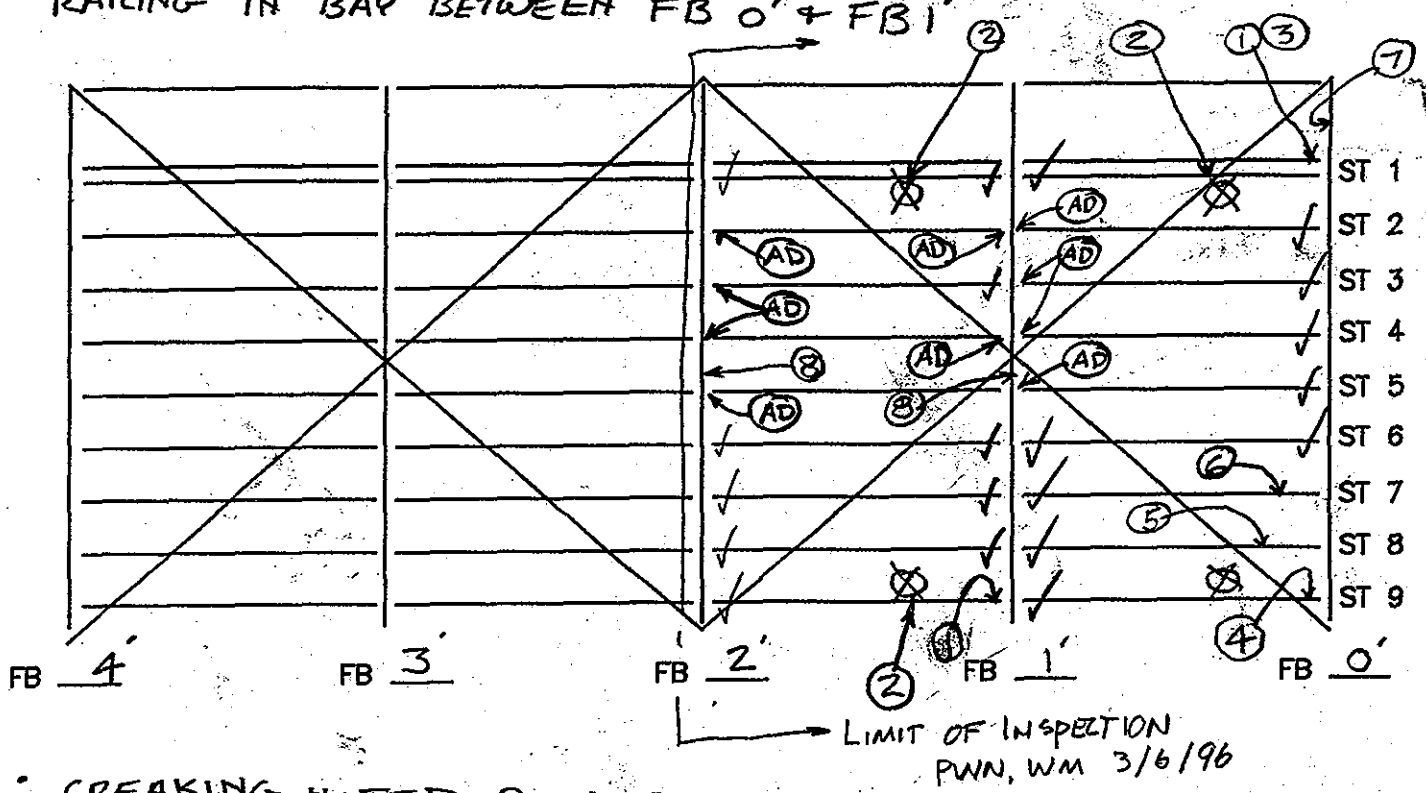

NOTE: CREAKING NOTED @ WEST END OF FLOORBEAM 2' UNDER LIVE LOAD

LEGEND
⊗ DOWNSPOUT

SPAN 2

NOTES:
1. WELDED REPAIR PL ON STRINGER CONN. K
2. LIGHT RUST @ STRINGER CONN. TO DOWNSPOUT
3. 1/16" PITTING 2'x2' ON E. FACE STRINGER WEB @ CONN.
4. 1/4" PITS ON EDGE OF BOTT FLANGE OF STRINGER S9 2' LONG
5. REMNANTS OF WELDED PLATES ON STRINGER BOTT. FLANGE, OLD UTILITY CONNECTIONS?
6. UP TO 1/4" PITTING ON TOP OF BOTT FL STRINGER 4" LONG x F.W.
7. UP TO 1/8" PITT. 20" WIDE x 30" HIGH ON F.B. WEB
8. WELDED UTILITY BRACKET MID HEIGHT OF F.B. WEB

FLOOR SYSTEM	
DEPARTMENT OF THE ARMY NEW ENGLAND DIVISION CORPS OF ENGINEERS	
BOURNE HIGHWAY BRIDGE ROUTINE INSPECTION	
NOTES BY: LICHTENSTEIN CONSULTING ENGINEERS	
JOB #1784	DATE: 3/6/96
CREW: PWN WM	SHEET 5 OF 7

85
219

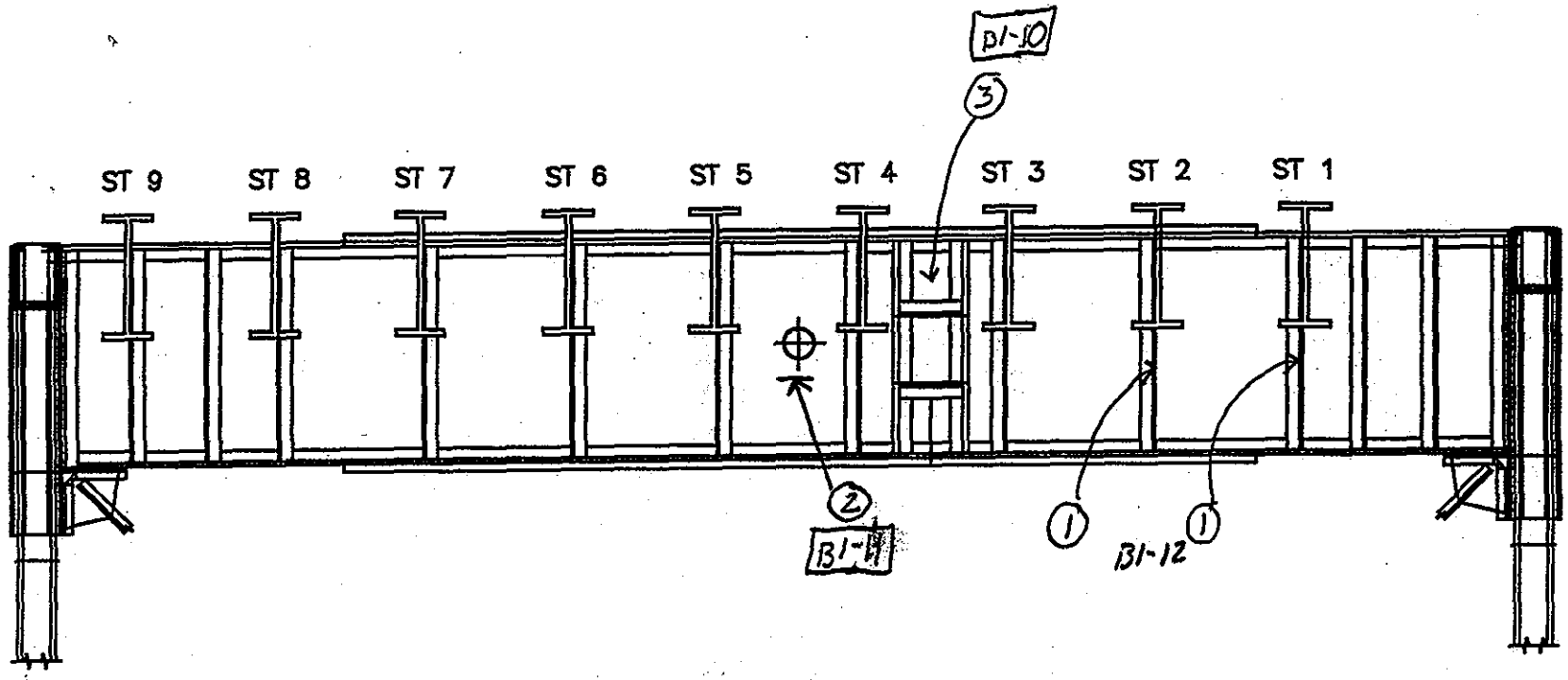

86
219

OPP HAND.

SPAN 2 S

FLOORBEAM 9' N ELEV.

NOTES: (1) WELDED PL 13x5x3/8 OSL
(2) PIPE SUPP. BRKT WELD TO FB
(3) CABLE BRKT WELDED TO FLANGE WEB

FLOORBEAM	
DEPARTMENT OF THE ARMY NEW ENGLAND DIVISION CORPS OF ENGINEERS	
BOURNE HIGHWAY BRIDGE ROUTINE INSPECTION	
NOTES BY: LICHTENSTEIN CONSULTING ENGINEERS	
JOB #1784	DATE: 3/6/96
CREW: TF/EL	SHEET 1 OF 12

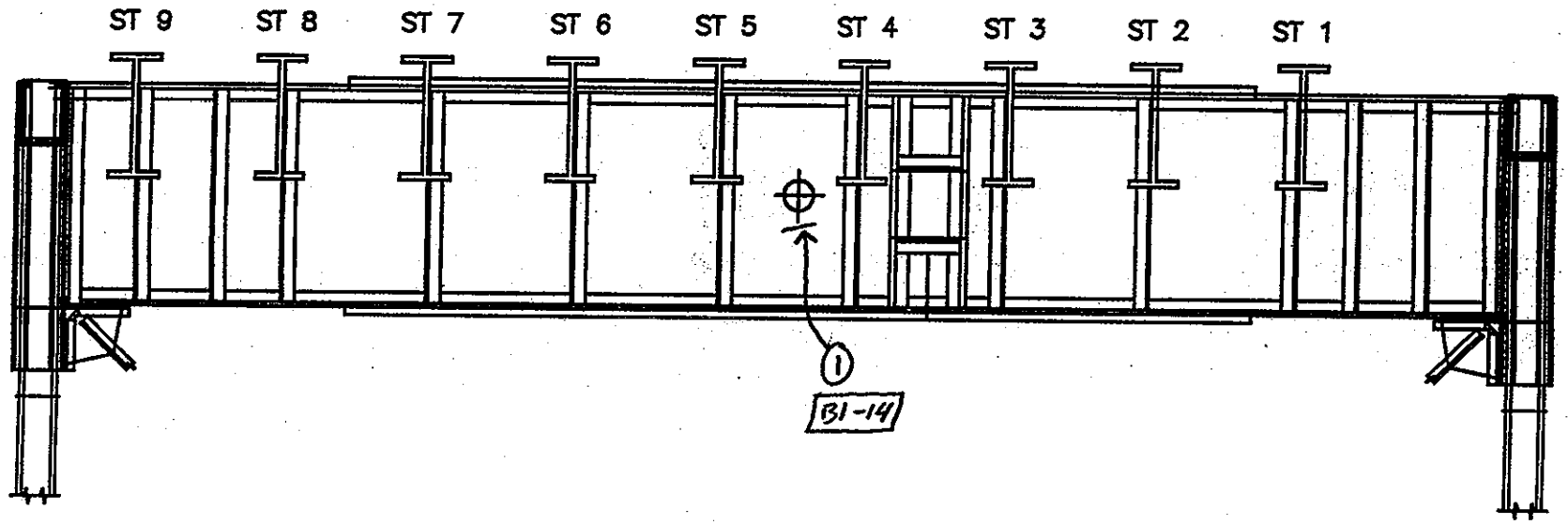

SPAN 2
FLOORBEAM 9' N ELEV.

NOTES: 1 WELDED & TO FLBM WEB - PIPE SUPPORT

FLOORBEAM	
DEPARTMENT OF THE ARMY NEW ENGLAND DIVISION CORPS OF ENGINEERS	
BOURNE HIGHWAY BRIDGE ROUTINE INSPECTION	
NOTES BY: LICHTENSTEIN CONSULTING ENGINEERS	
JOB #1784	DATE: 3/6/96
CREW: TF/EL	SHEET 2 OF 12

87
219

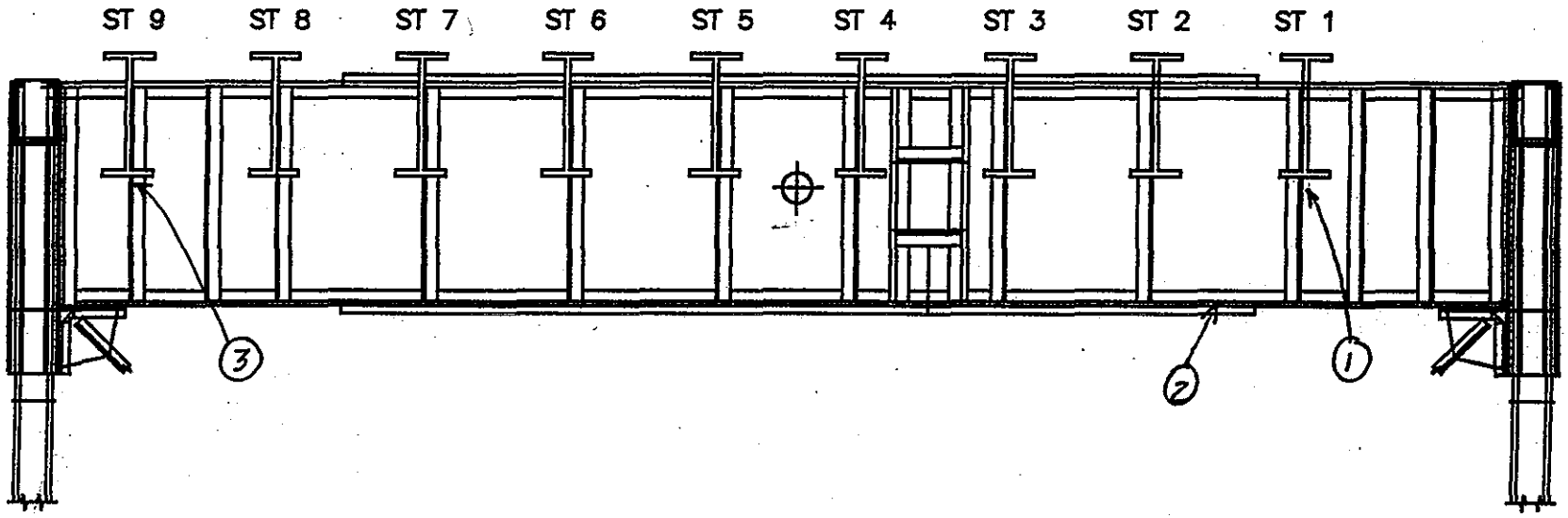

SPAN 2
FLOORBEAM 8'

OPP HAND.
~~N~~ S ELEV.

NOTES: ① WEID PL ON STIFF. & OSL
② 1/4" D x 1" W x 5" L PITT. ON FLBM BOT FL COV. PL
③ PITT. 3/16" D x 2" H x 3" W ON STIFF & OSL

FLOORBEAM	
DEPARTMENT OF THE ARMY NEW ENGLAND DIVISION CORPS OF ENGINEERS	
BOURNE HIGHWAY BRIDGE ROUTINE INSPECTION	
NOTES BY: LICHTENSTEIN CONSULTING ENGINEERS	
JOB #1784	DATE: 3·6·96
CREW: TF, EL	SHEET 4 OF 12

88
219

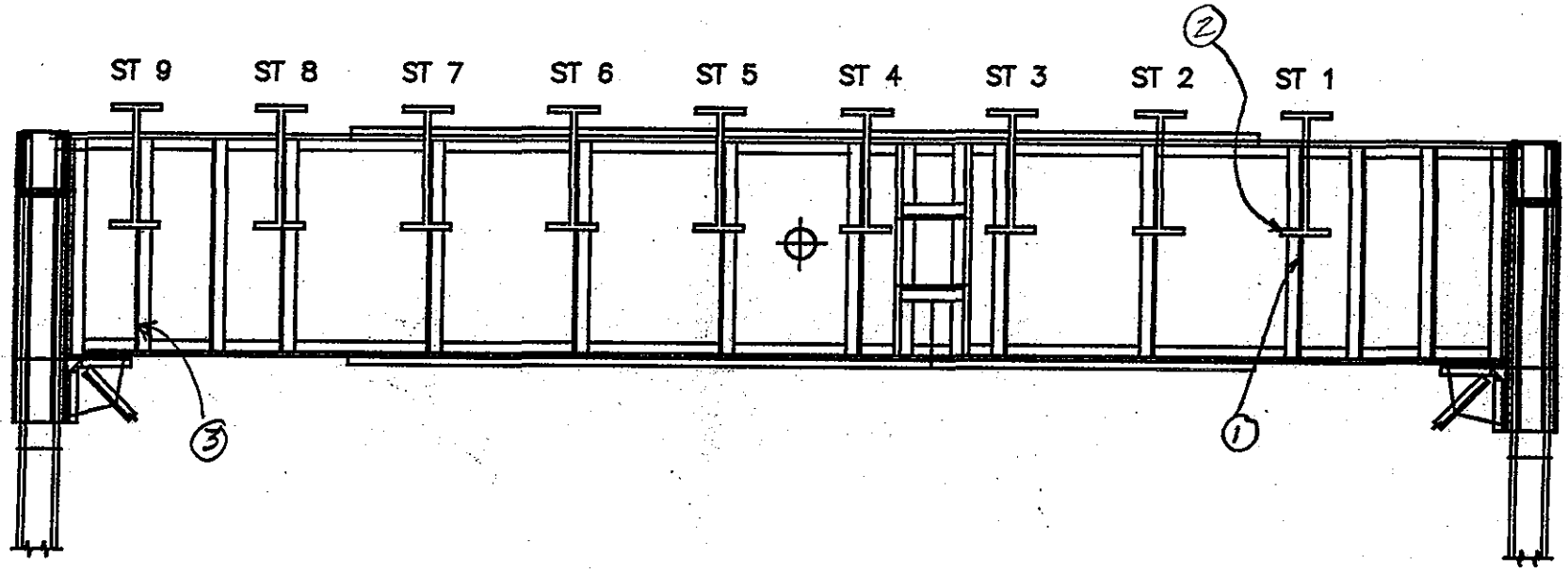

(OPP HAND)

SPAN 2

FLOORBEAM 7' ~~N~~ S ELEV.

NOTES: ① WELD PL 3/8" x 40" H x 5" W ON STIFF & OSL, BEGINS @ FLBM BOT FL

② MID SPAN ST. 1 BOT. E. FLNG PITT 1/8" PITTS INTO EDGE 1'-0" LONG.

③ WELD PL 5" W x 8" H x 3/8" @ BOT OF STIFF & OSL

FLOORBEAM	
DEPARTMENT OF THE ARMY NEW ENGLAND DIVISION CORPS OF ENGINEERS	
BOURNE HIGHWAY BRIDGE ROUTINE INSPECTION	
NOTES BY: LICHTENSTEIN CONSULTING ENGINEERS	
JOB #1784	DATE: 3·6·96
CREW: TF, EL	SHEET 5 OF 12

89
219

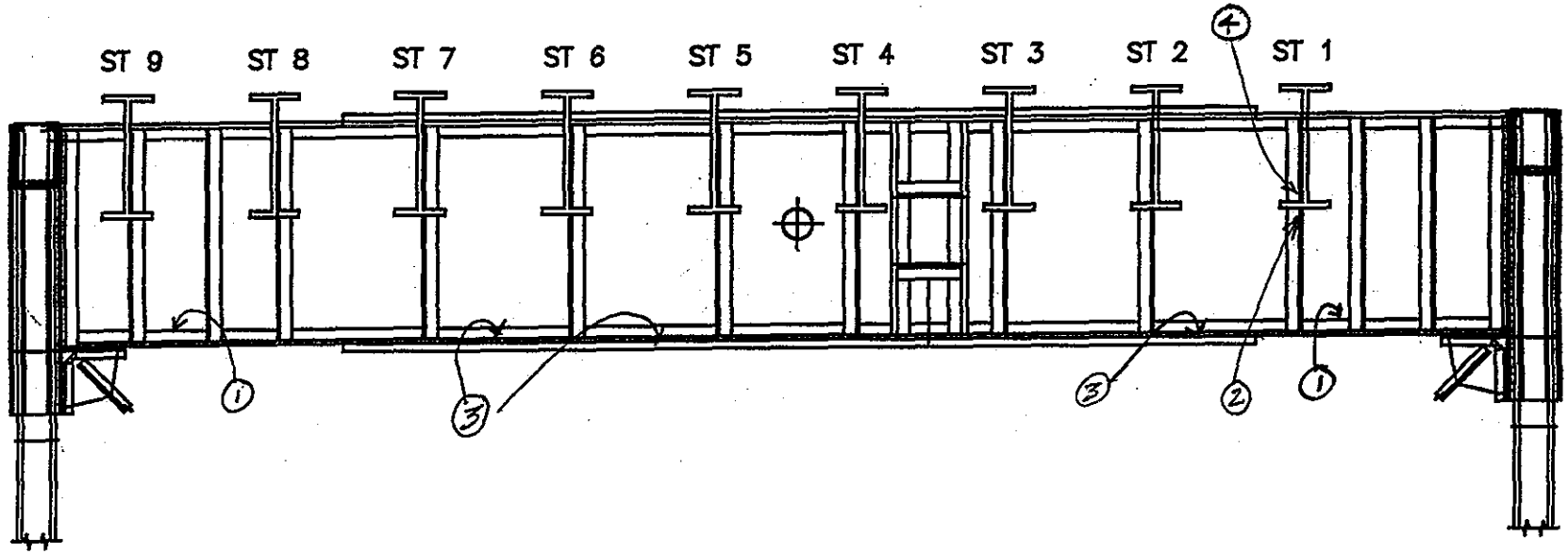

(OPP HAND)

SPAN 2

FLOORBEAM 6'

S N ELEV.

NOTES: ① PITT 1/8" D x 2" H x 12" ON FLBM WEB ABOVE BOT FL & VERT. LEG
② WELD @ 7/8"
③ PITT 1/8 D. x 1" N.-S. MULTIPLE LOCATIONS ALONG BTM. FLNG. COV. @
④ SIM. TO ①, ON STR WEB

FLOORBEAM

DEPARTMENT OF THE ARMY
NEW ENGLAND DIVISION CORPS OF ENGINEERS

BOURNE HIGHWAY BRIDGE
ROUTINE INSPECTION

NOTES BY: LICHTENSTEIN
CONSULTING ENGINEERS

JOB #1784	DATE: 3·6·96
CREW: JF, EL	SHEET 6 OF 12

90
219

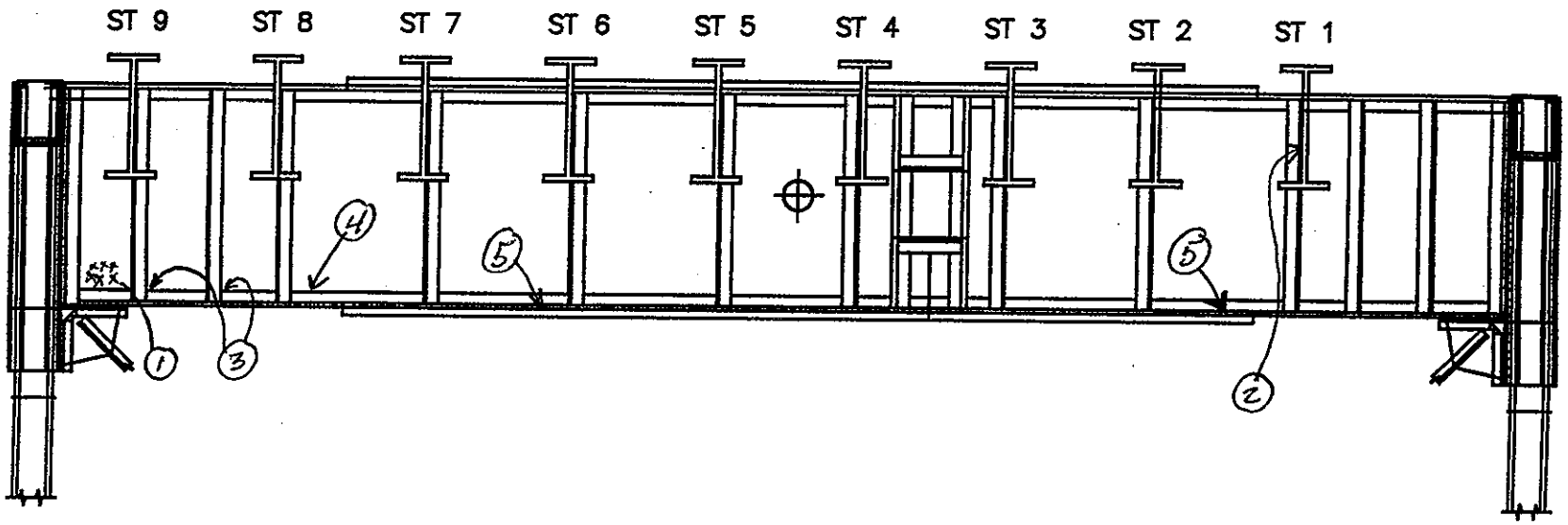

(OPP. HAND)

SPAN 2

FLOORBEAM 5' ~~N~~ S ELEV.

NOTES: (1) PITT. 1/8" D x 6"x6" ON FLBM WEB ABOVE BOT. FL & VERT. LEG
(2) 1/16" x 3" x 1/2 HEIGHT PITT. @ CONN. & ON STR WEB
(3) 1/8" x 2" x 2" PITT ON FLBM WEB ABOVE BOT FL & VERT. LEG
(4) 1/8" x 1" H x 8" L PITT " " " " " "
(5) BTM FLNG COV. PL MISC. 1/8" PITT FULL LENGTH (1" N-S)

FLOORBEAM	
DEPARTMENT OF THE ARMY NEW ENGLAND DIVISION CORPS OF ENGINEERS	
BOURNE HIGHWAY BRIDGE ROUTINE INSPECTION	
NOTES BY: LICHTENSTEIN CONSULTING ENGINEERS	
JOB #1784	DATE: 3/6/96
CREW: TF, EL	SHEET 7 OF 12

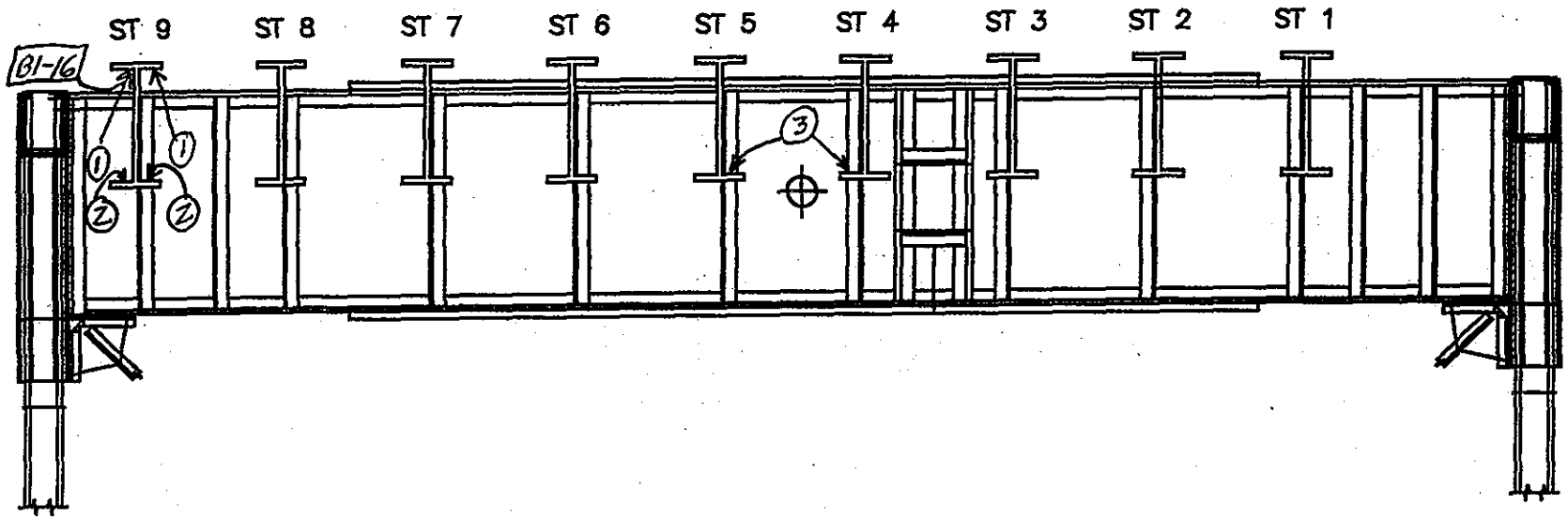

SPAN 2
FLOORBEAM 5' N ELEV.

NOTES: ① PLT 1/8" D x FULL WIDTH x 4" L @ MID SPAN.
② " " x 2" W x 4" L @ MID SPAN.
③ 6 1/2" L x 2" W x 1" THICK PL WELD TO LOWER FLNG MID SPAN 5'-4'
↳ (SEE SKETCH FLBM 3', S. ELEV., SPAN 2)

FLOORBEAM	
DEPARTMENT OF THE ARMY NEW ENGLAND DIVISION CORPS OF ENGINEERS	
BOURNE HIGHWAY BRIDGE ROUTINE INSPECTION	
NOTES BY: LICHTENSTEIN CONSULTING ENGINEERS	
JOB #1784	DATE: 3·6·96
CREW: TF, EL	SHEET 9 OF 12

92
219

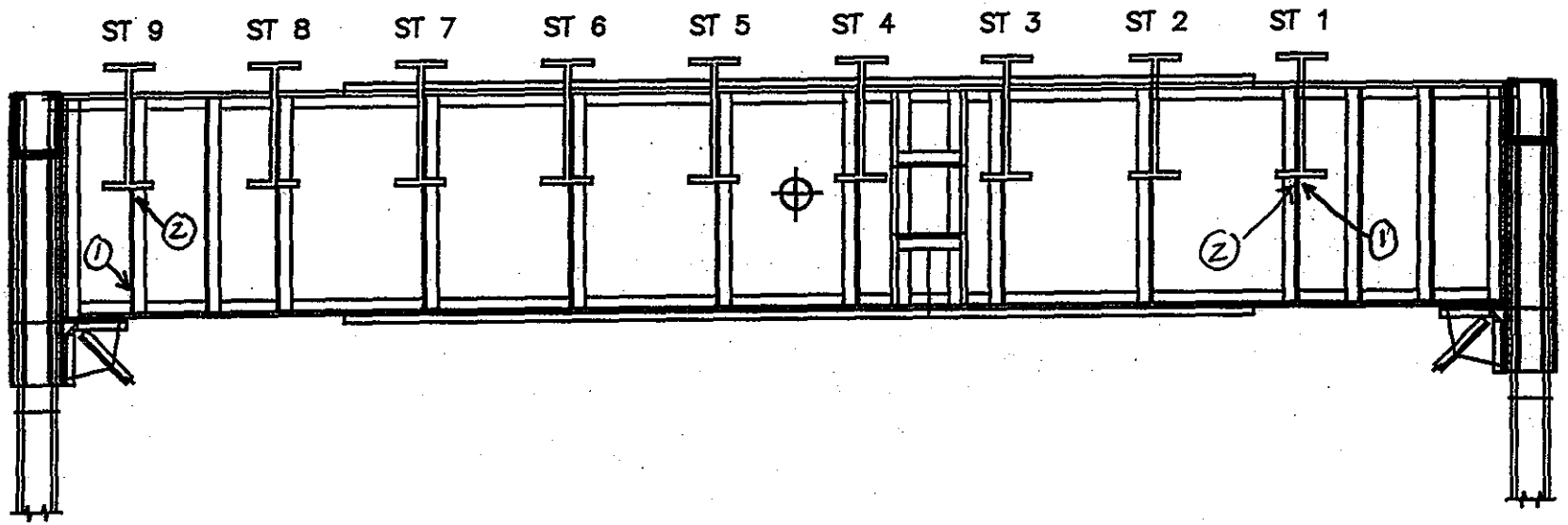

(OPP. HAND)

SPAN 2

FLOORBEAM 4' ~~N~~ S ELEV.

NOTES: ① 3/8" WELD PL ON STIFF & OSL
② 1/8" x 3" W x 1" H PITT ON STIFF & OSL IMMED. BELOW STR.

FLOORBEAM	
DEPARTMENT OF THE ARMY NEW ENGLAND DIVISION CORPS OF ENGINEERS	
BOURNE HIGHWAY BRIDGE ROUTINE INSPECTION	
NOTES BY: LICHTENSTEIN CONSULTING ENGINEERS	
JOB #1784	DATE: 3·6·96
CREW: TF, EL	SHEET 10 OF 12

93
219

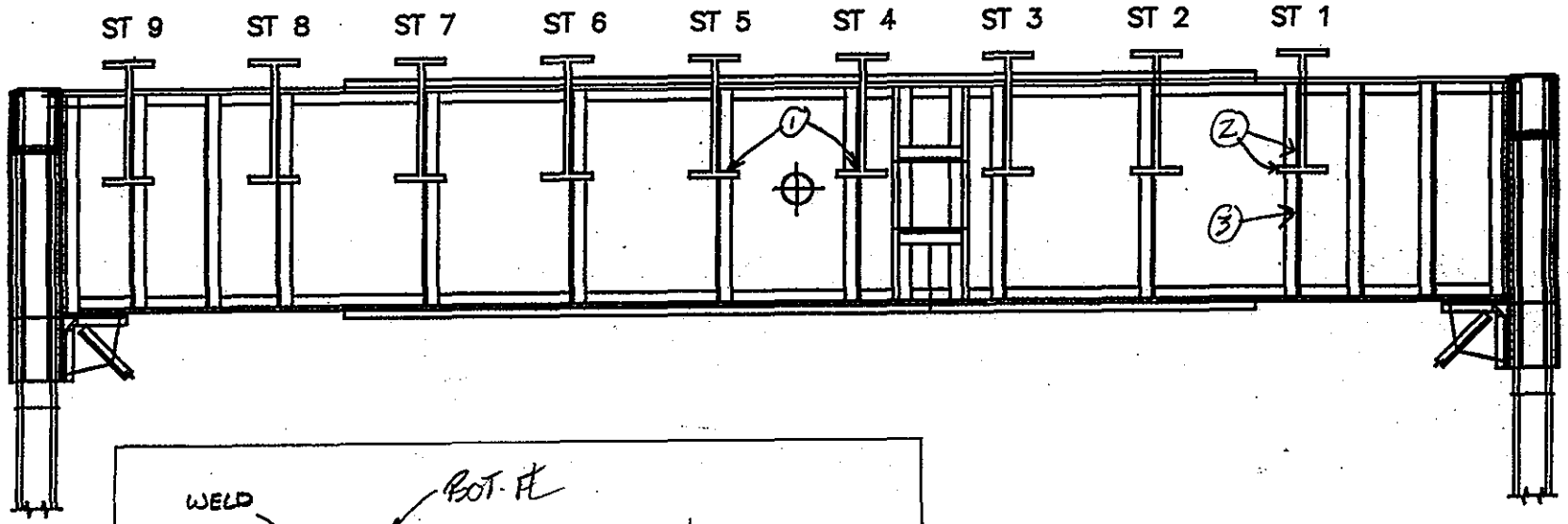

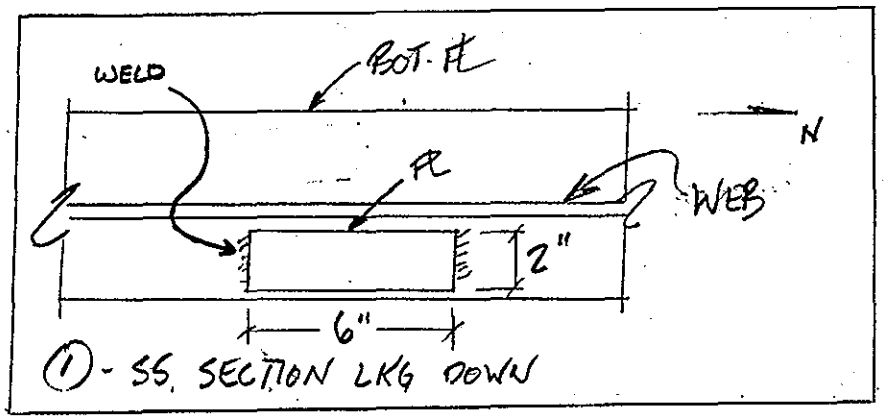

(OPP. HAND)

SPAN 2

FLOORBEAM 3' S ~~N~~ ELEV.

NOTES:
1. 6½" L x 2" W x 1" THICK PL WELD TO LOWER FL @ MID SPAN. 4'-3'
2. PITT x 1/16" x 6" H x 12" L ON WEB & E. SIDE BTM FLNG.
3. WELD PL 3/8" x 5" W x 40" H

FLOORBEAM	
DEPARTMENT OF THE ARMY NEW ENGLAND DIVISION CORPS OF ENGINEERS	
BOURNE HIGHWAY BRIDGE ROUTINE INSPECTION	
NOTES BY: LICHTENSTEIN CONSULTING ENGINEERS	
JOB #1784	DATE: 3.6.96
CREW: TF, EL	SHEET 11 OF 12

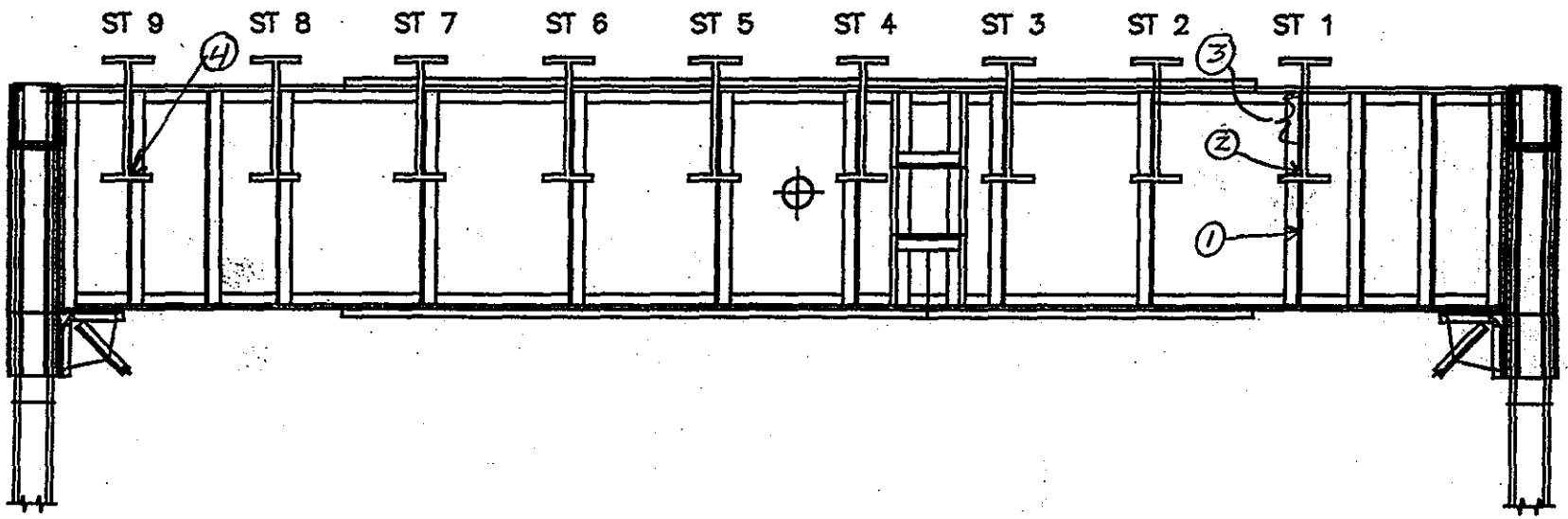

95
219

SPAN 2 (OPP. HAND)
FLOORBEAM 2' ~~N~~ S ELEV.

NOTES: ① WELD PL ON OSL STIFF. ∢ 3/8" x 5" x UP TO ST 1 BTM FLNG.
② PITT 3/16" x 3" H x 12" BTM OF WEB.
③ PITT 1/16" x 50% WEB HGT (DIRECTLY ABOVE 3/16" PITTING)
④ 1/16" PIT x 3" H x 10" ON WEB
②, ③ & ④ @ END OF STR.

FLOORBEAM	
DEPARTMENT OF THE ARMY NEW ENGLAND DIVISION CORPS OF ENGINEERS	
BOURNE HIGHWAY BRIDGE ROUTINE INSPECTION	
NOTES BY: LICHTENSTEIN CONSULTING ENGINEERS	
JOB #1784	DATE: 3.6.96
CREW: TF, EL	SHEET 12 OF 12

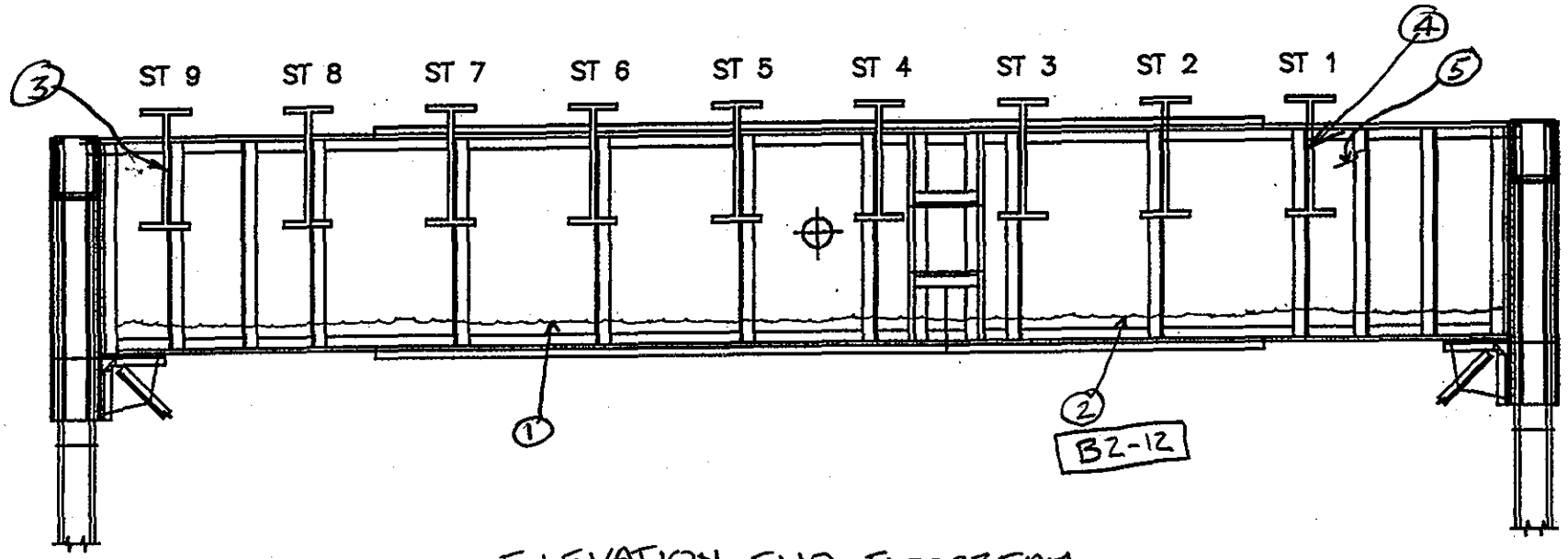

ELEVATION END FLOORBEAM

NOTE: STRINGERS ARE STUB STRINGERS FOR SUPPORT OF MODULAR EXPANSION JOINT

SPAN 2
FLOORBEAM 0' N ELEV.

NOTES:
1. FLAME CUT TROUGH PL FULL LENGTH OF FB WEB
2. TORN WELD @ FLAME CUT TROUGH PL → TEAR DOES NOT CONTINUE INTO FB WEB
3. HEAVY RUST ON STUB STRINGER → WATER LEAKAGE PRESENT
4. MEDIUM RUST ON STUB STRINGER → WATER LEAKAGE PRESENT
5. CONC. FORM PL MISSING, SPALL IN CONC. 3"H x 4" D x 8" W

FLOORBEAM	
DEPARTMENT OF THE ARMY NEW ENGLAND DIVISION CORPS OF ENGINEERS	
BOURNE HIGHWAY BRIDGE ROUTINE INSPECTION	
NOTES BY: LICHTENSTEIN CONSULTING ENGINEERS	
JOB #1784	DATE: 3/6/96
CREW: PWM WM	SHEET 6 OF 7

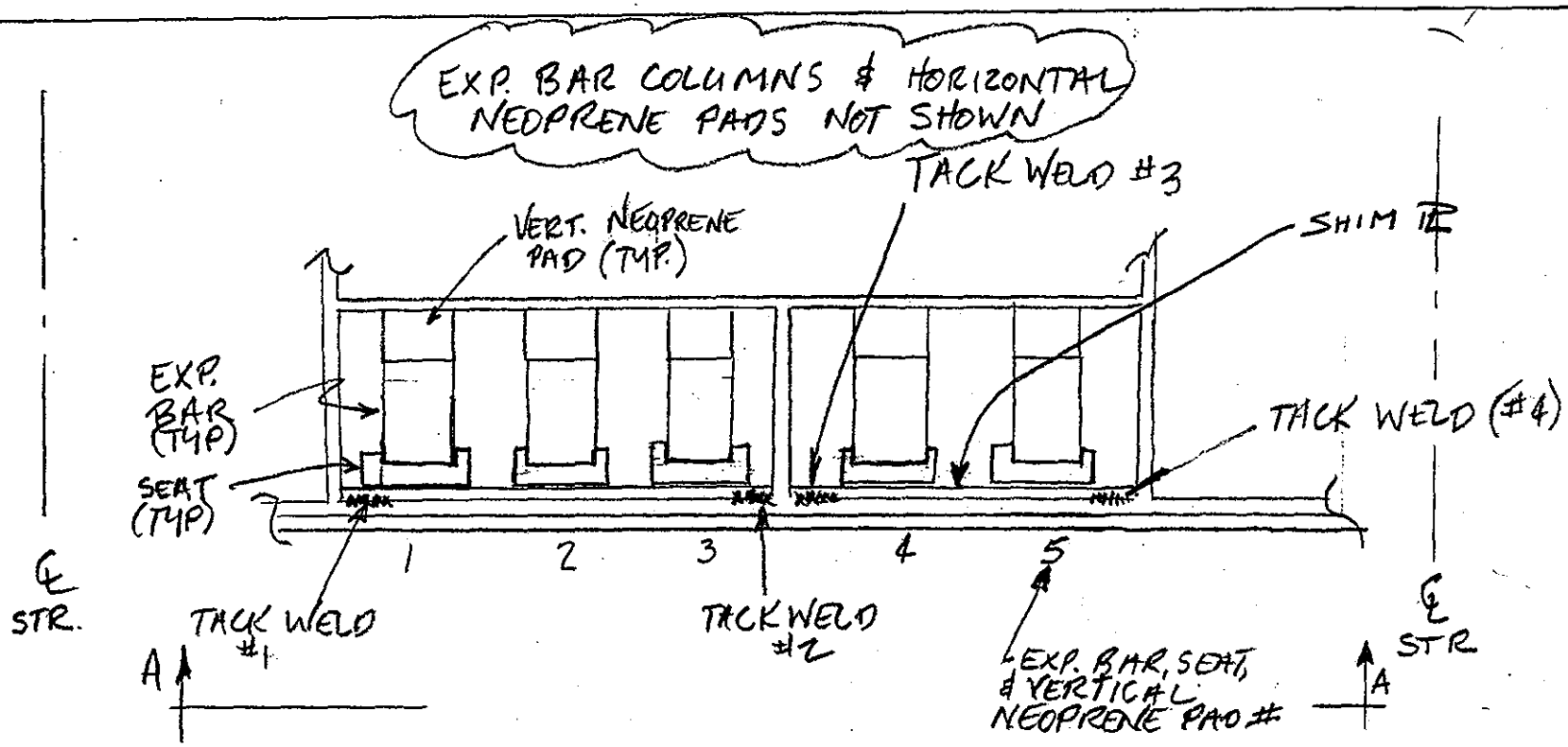

TYPICAL EXP. JT. ASSEMBLY @ PIER 4

(N. ELEV. - S. ELEV SIM OPP HAND)

NOTES:

DEPARTMENT OF THE ARMY NEW ENGLAND DIVISION CORPS OF ENGINEERS	
BOURNE HIGHWAY BRIDGE ROUTINE INSPECTION	
NOTES BY: LICHTENSTEIN CONSULTING ENGINEERS	
JOB #1784	DATE: 3-28-96
CREW: TF/EL/PN	SHEET 1 OF 4

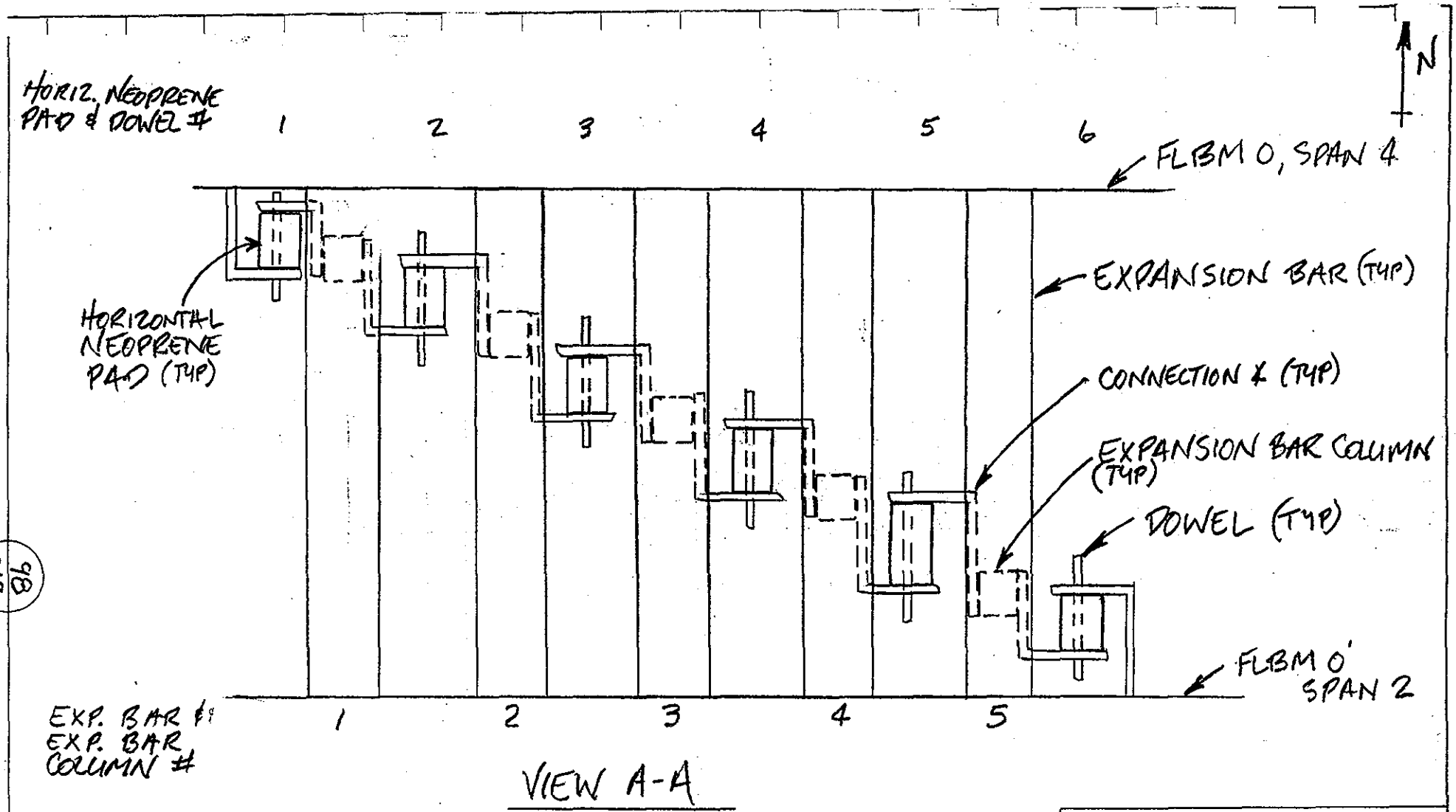

VIEW A-A

NOTES:

- EXP. BAR COLUMNS APPEAR TO BE STRUCTURAL TUBING & ARE WELDED TOP (TO JOINT IN DECK) & BOTTOM (TO EXP. BAR)

DEPARTMENT OF THE ARMY NEW ENGLAND DIVISION CORPS OF ENGINEERS	
BOURNE HIGHWAY BRIDGE ROUTINE INSPECTION	
NOTES BY: LICHTENSTEIN CONSULTING ENGINEERS	
JOB #1784	DATE: 3·28·96
CREW: TF/EL/PN	SHEET 2 OF 4

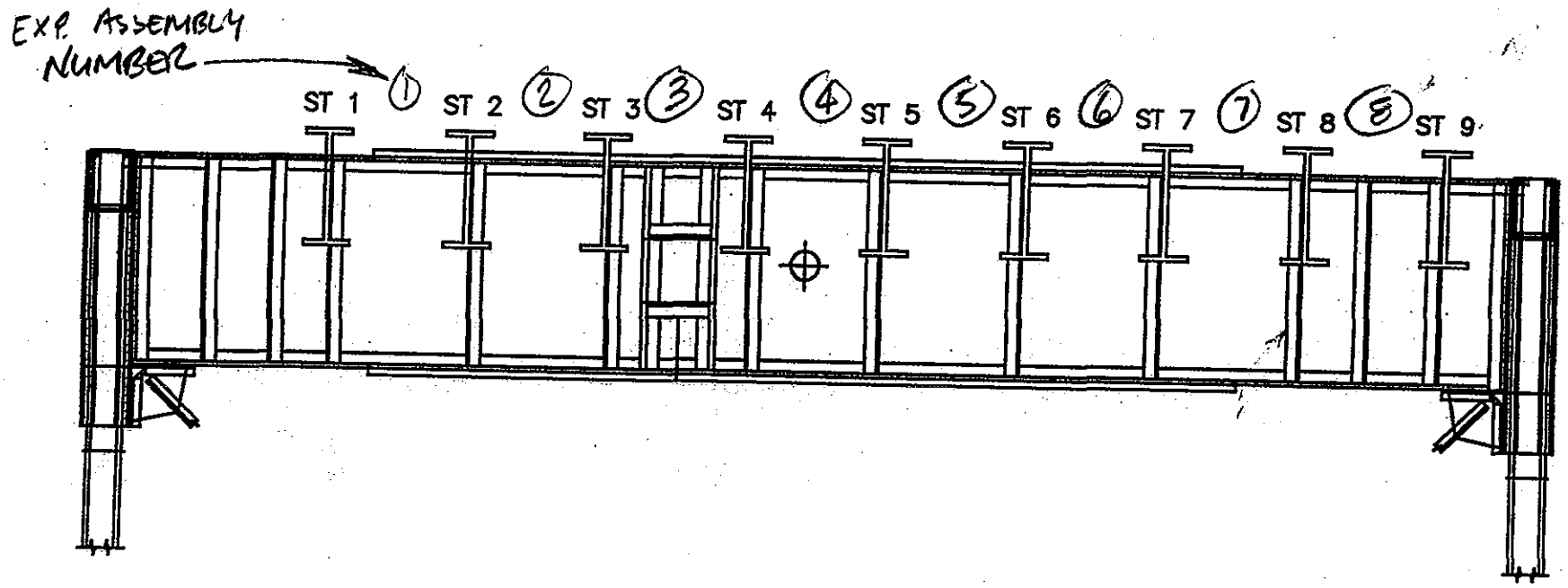

SPAN 4
FLOORBEAM 0 S ELEV.

NOTES:

#8 - HVY RUST ON ENTIRE ASSEMBLY - TACK WELDS #2&4 (N&S) ARE BRKN w/ (1R). UPR DOWEL THRU NEOPRENE PAD IS MSG (PAD STILL IN PLACE.

#7 - TACK WELD #3&4 (S) ARE BRKN. EXP. BAR #3 HAS 1/4" GAP BTWN BAR & SEAT (S. SIDE). EXP. BAR #4 HAS 1/8" GAP BTWN BAR & SEAT (S. SIDE). THE SEATS UNDER EXP. BARS 4&5 (S) ARE LOOSE. TACK WELD #2 N IS BRKN. EXP. BAR #2 HAS A 1/16" GAP BTWN BAR & SEAT.

FLOORBEAM	
DEPARTMENT OF THE ARMY NEW ENGLAND DIVISION CORPS OF ENGINEERS	
BOURNE HIGHWAY BRIDGE ROUTINE INSPECTION	
NOTES BY: LICHTENSTEIN CONSULTING ENGINEERS	
JOB #1784	DATE: 3-28-96
CREW: TF/EL/PN	SHEET 4 OF 4

B12-20

#6 - S. SIDE - SEAT #4, WEST FL IS BRKN OFF & SEAT HAS ROTATED ≈10°. HORIZ. NEOP. PAD #6 BRKN & NOT IN CONTACT W/ N. ∡ B12-19. HORIZ. NEOP. PAD #5 - DOWEL DISLODGED & PAD IS LOOSE. B12-21. BAR #4 COL. WELD TO JOINT (TOP) IS BRKN, COL. HAS MOVED 7/16" S B12-22. N. SIDE - TACK WELD #2 BRKN.

#5 - HORIZ. NEOPRENE PAD #4, DOWEL BRKN & PAD PARTIALLY DISLODGED

#4 - S. SIDE - EXP. BAR #5 HAS 1/16" GAP BTWN BAR & SEAT.

#3 - HORIZ. NEOPRENE PAD #3 DOWEL DISLODGED, PAD OK. EXP. BAR COL. 1, 2 & 5 TOP WELD CRACKED W/ (AD) W. SIDE ONLY B12-23

#2 - S. SIDE - TACK WELD #3 BRKN W/ (AD). EXP. BAR #5 HAS 3/16" GAP BTWN BAR & SEAT. EXP. BAR #3 HAS 1/8" GAP BTWN BAR & SEAT. N. SIDE - EXP. BAR #1 HAS 5/16" GAP BTWN BAR & SEAT. THE EAST FL OF THIS SEAT IS BRKN & SEAT IS LOOSE. TACK WELD #2 BRKN. EXP. BARS #3 & 4 EACH HAVE 1/8" GAP BTWN BAR & SEAT.

#1 - 3/16" (IR) BTWN ALL SEATS & SHIM R N & S SIDES. SOUTH HALF OF ALL EXP. BARS HAVE MOD-HVY RUST. B12-25

(219 100)

NOTES:
- (AD) TYP @ ASSEMBLIES #2, 3, 4, 5, 7 & 8
- SIGNS OF MVMNT (HORIZ) @ EACH ASSEMBLY
- BANGING NOISE AUDIBLE UNDER LIVELOAD
- GAPS BETWEEN BAR & SEATS CLOSE UNDER LIVE LOAD

DEPARTMENT OF THE ARMY NEW ENGLAND DIVISION CORPS OF ENGINEERS	
BOURNE HIGHWAY BRIDGE ROUTINE INSPECTION	
NOTES BY: LICHTENSTEIN CONSULTING ENGINEERS	
JOB #1784	DATE: 3·28·96
CREW: TF/EL/PN	SHEET 3 OF 4

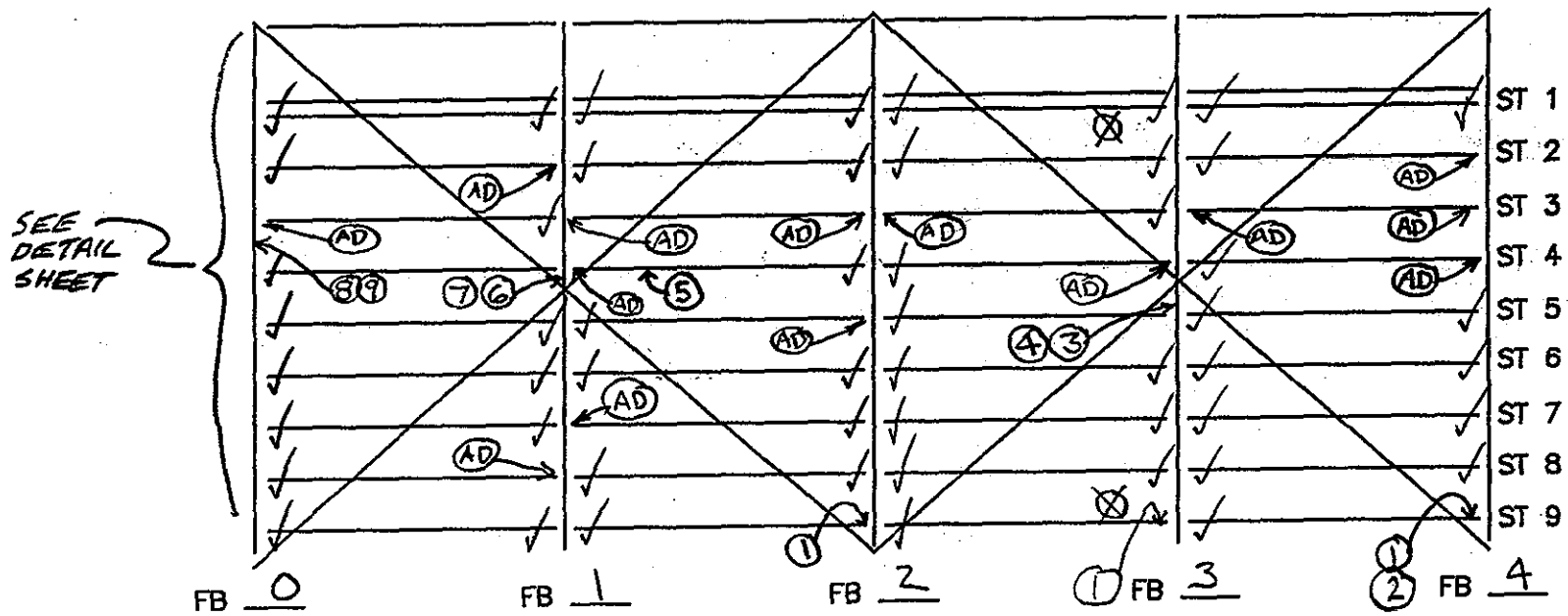

LEGEND
⊗ - DOWNSPOUT

SPAN 4

NOTES:
1. WELDED REPAIR PL ON STRINGER CONN. ANGLE
2. BOLTED REPAIR CHANNEL ON STRINGER @ CONNECTION
3. 1/4" IR 1' LONG BTWN COV PL & BOTT FL
4. UP TO 3/16" PITTING 1' LONG ON OUTER 1/2" OF COV. PL
5. 1 LOOSE BOLT ON CATWALK RAIL w/ AD
6. 1/4" IR 8" LONG BTWN COV PL & BOTT FL
7. 1/8" PITTING 8" LONG ON OUTER 1/2" OF COV. PL
8. 2 - BROKEN OR CUT RIVETS → NOT CONNECTING ANYTHING - THROUGH F.B. WEB
9. LADDER BRACKET WELDED TO FLOORBEAM WEB

FLOOR SYSTEM	
DEPARTMENT OF THE ARMY NEW ENGLAND DIVISION CORPS OF ENGINEERS	
BOURNE HIGHWAY BRIDGE ROUTINE INSPECTION	
NOTES BY: LICHTENSTEIN CONSULTING ENGINEERS	
JOB #1784	DATE: 3/6/96
CREW: PWN WM	SHEET 2 OF 7

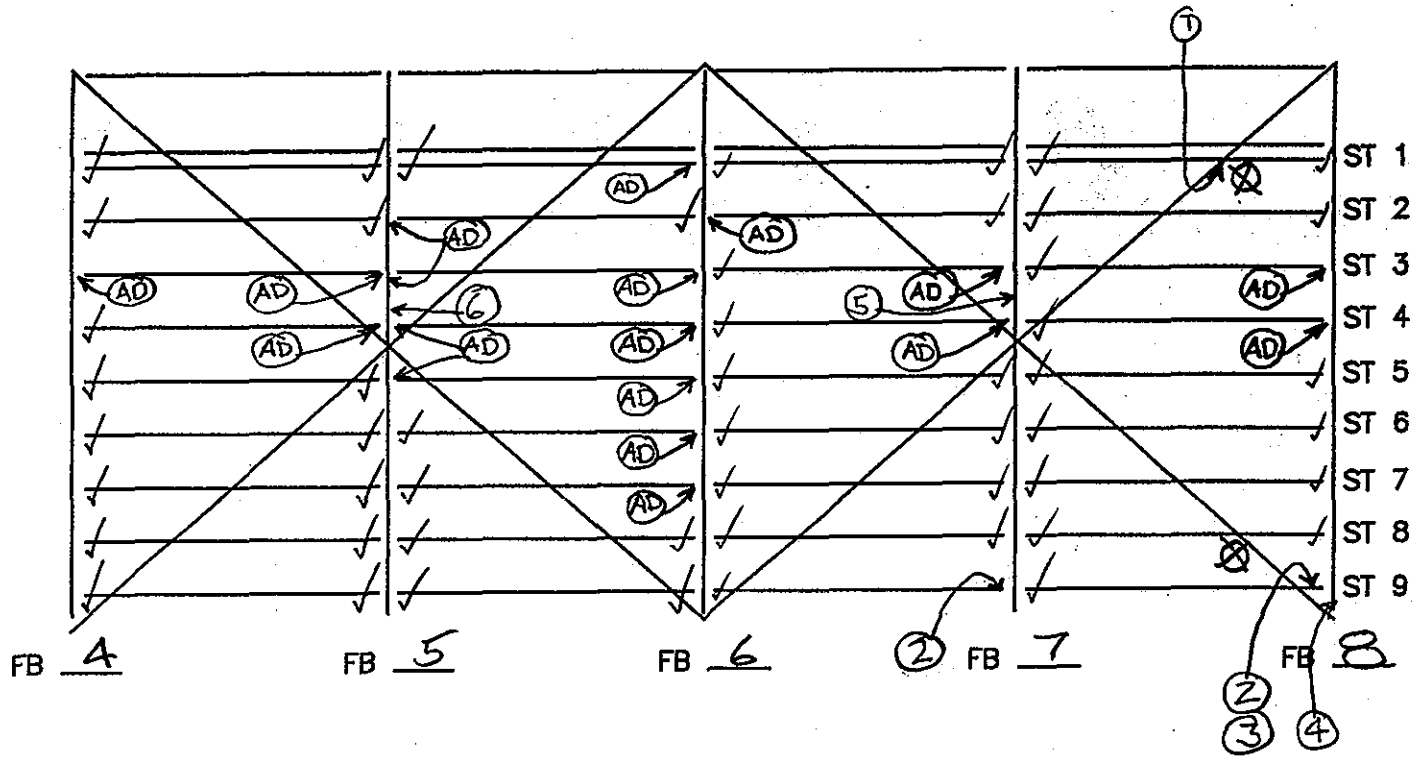

LEGEND

⊗ = DOWNSPOUT

102
219

SPAN 4

NOTES:
1. LIGHT RUST ON STRINGER BOTT FE
2. WELDED REPAIR PL ON STRINGER CONN. ANGLE
3. BOLTED REPAIR CHANNEL ON STRINGER
4. 5" HIGH x 2" WIDE x 3/16" PITTING ON F.B. WEB (MID. HEIGHT)
5. 1/4" IR 2' LONG B'TWN F.B. BOTT FE & COV. PL
6. TACK WELDED CATWALK RAIL TO FLOORBEAM WEB → 18" UP FROM BOT FE

FLOOR SYSTEM	
DEPARTMENT OF THE ARMY NEW ENGLAND DIVISION CORPS OF ENGINEERS	
BOURNE HIGHWAY BRIDGE ROUTINE INSPECTION	
NOTES BY: LICHTENSTEIN CONSULTING ENGINEERS	
JOB #1784	DATE: 3/6/96
CREW: PON WM	SHEET 1 OF 7

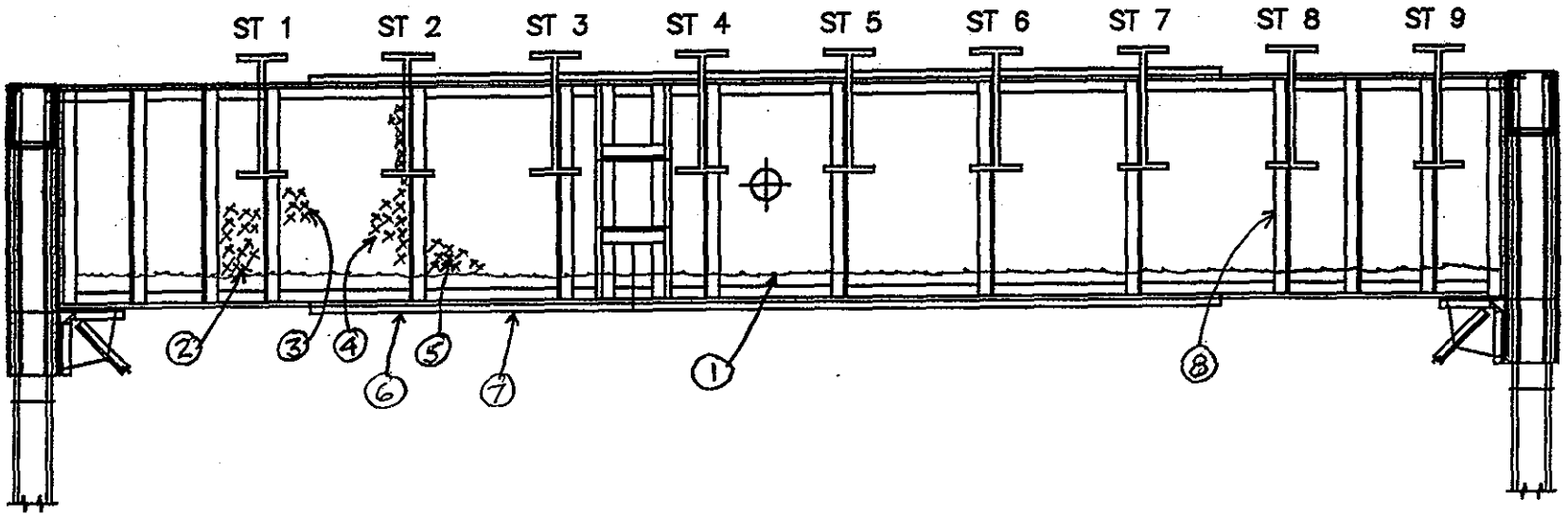

ELEV. END FLOORBEAM

NOTE: STUB STRINGERS PRESENT

SPAN 4
FLOORBEAM O S ELEV.

NOTES:
1. FLAME CUT TROUGH PLATE, FULL LENGTH ON FB WEB
2. UP TO 1/8" PITTING 18" HIGH x 8" WIDE
3. UP TO 3/8" PITTING 8" Ø
4. UP TO 3/16" PITTING 1' Ø ; REMAINDER OF STIFFENER HGT. x 2" WIDE.
5. UP TO 3/16" PITTING 10" HIGH x 2' WIDE
6. DOWN TO 3/16" REM 12" LONG, OUTER 1/2" OF BOTT FE COV. PL
7. 1/4" IR 3' LONG BTWN BOTT FE & ⊥ COV. PL
8. UP TO 1/4" PITT x FULL HT. ON WEB.

FLOORBEAM	
DEPARTMENT OF THE ARMY NEW ENGLAND DIVISION CORPS OF ENGINEERS	
BOURNE HIGHWAY BRIDGE ROUTINE INSPECTION	
NOTES BY: LICHTENSTEIN CONSULTING ENGINEERS	
JOB #1784	DATE: 3/6/96
CREW: PWN WM	SHEET 4 OF 7

103
219

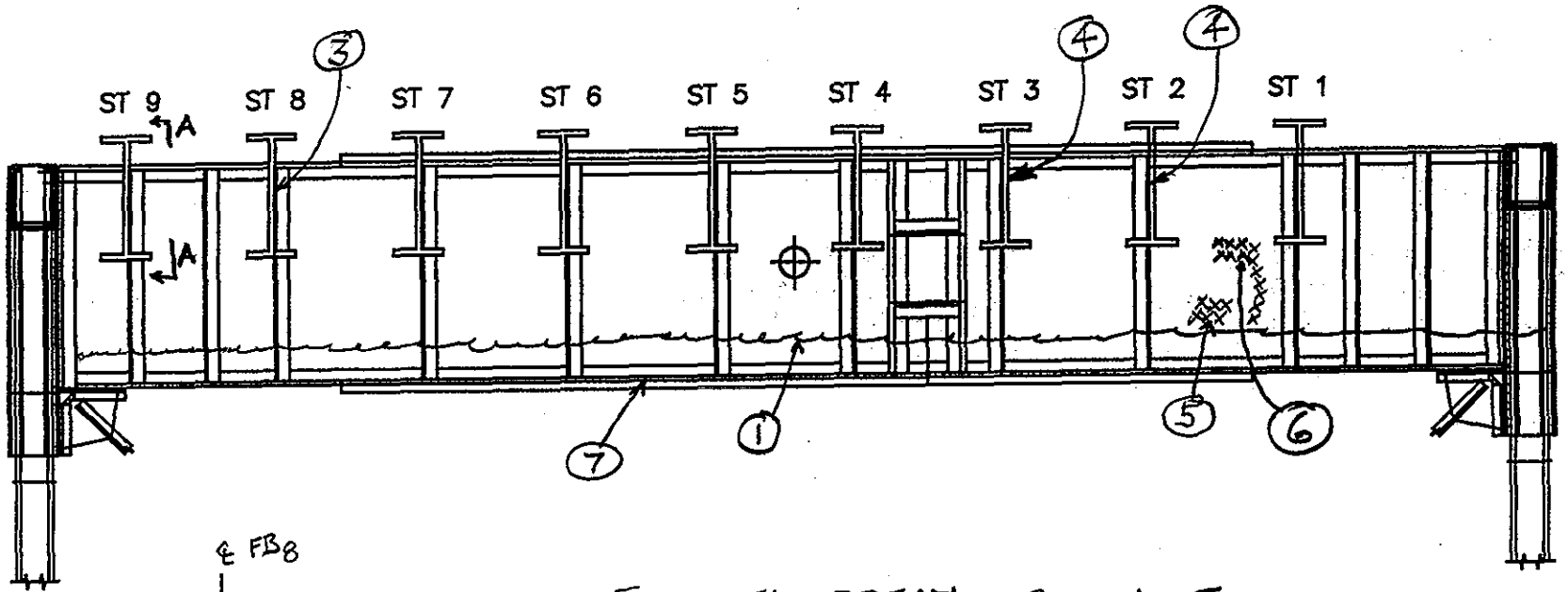

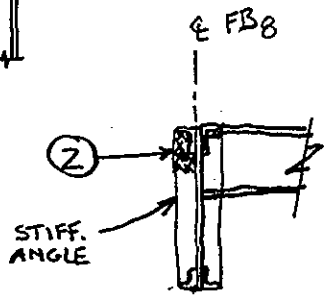

SEC. AA

END FLOORBEAM @ JOINT

NOTE: NO STRINGERS PRESENT

SPAN 4
FLOORBEAM 8 N ELEV.

NOTES:
1. FLAME CUT TROUGH PLATE, FULL LENGTH OF F.B.
2. 3" HIGH x F.W. → ¼" PITTING TAPERING TO ½"Ø HOLE
3. HOLED THROUGH STIFF PL W/ WELDED REPAIR PLATE
4. WELDED REPAIR PL @ TOP OF STIFF. ANGLE
5. UP TO ¼" PITT. x 4"Ø
6. UP TO 3/16" PITT. 18" WIDE x 8" HIGH
7. ¼" IR B'TWN BOTT FL + CON. R (TYP.)

FLOORBEAM	
DEPARTMENT OF THE ARMY NEW ENGLAND DIVISION CORPS OF ENGINEERS	
BOURNE HIGHWAY BRIDGE ROUTINE INSPECTION	
NOTES BY: LICHTENSTEIN CONSULTING ENGINEERS	
JOB #1784	DATE: 3/6/96
CREW: PWN WLT	SHEET 3 OF 7

104/219

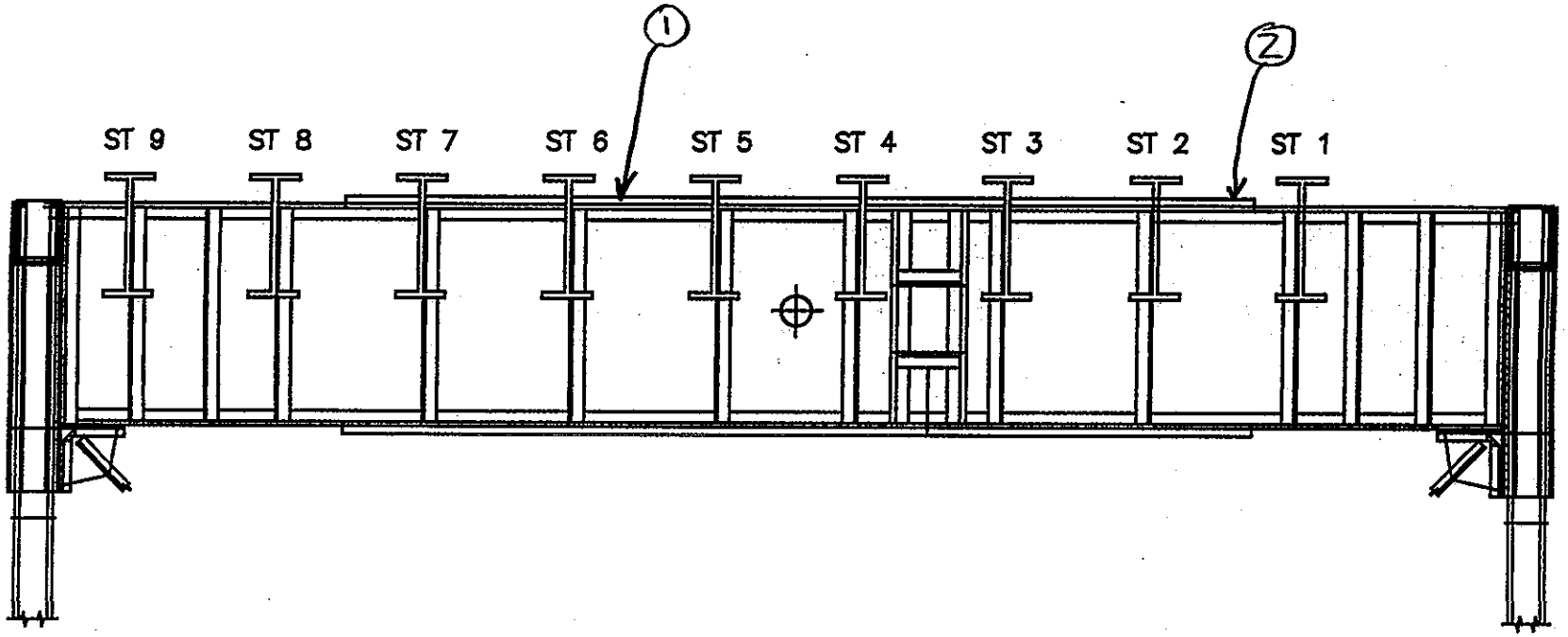

105
219

DECK JOINT

SPAN 4
FLOORBEAM 8 N ELEV.

NOTES: (1) HEAVY WATER LEAKAGE DURING RAIN
(2) LIGHT WATER LEAKAGE DURING RAIN

FLOORBEAM

DEPARTMENT OF THE ARMY
NEW ENGLAND DIVISION CORPS OF ENGINEERS

BOURNE HIGHWAY BRIDGE
ROUTINE INSPECTION

NOTES BY: LICHTENSTEIN
CONSULTING ENGINEERS

JOB #1784 DATE: 3/6/96
CREW: PWN WM SHEET 7 OF 7

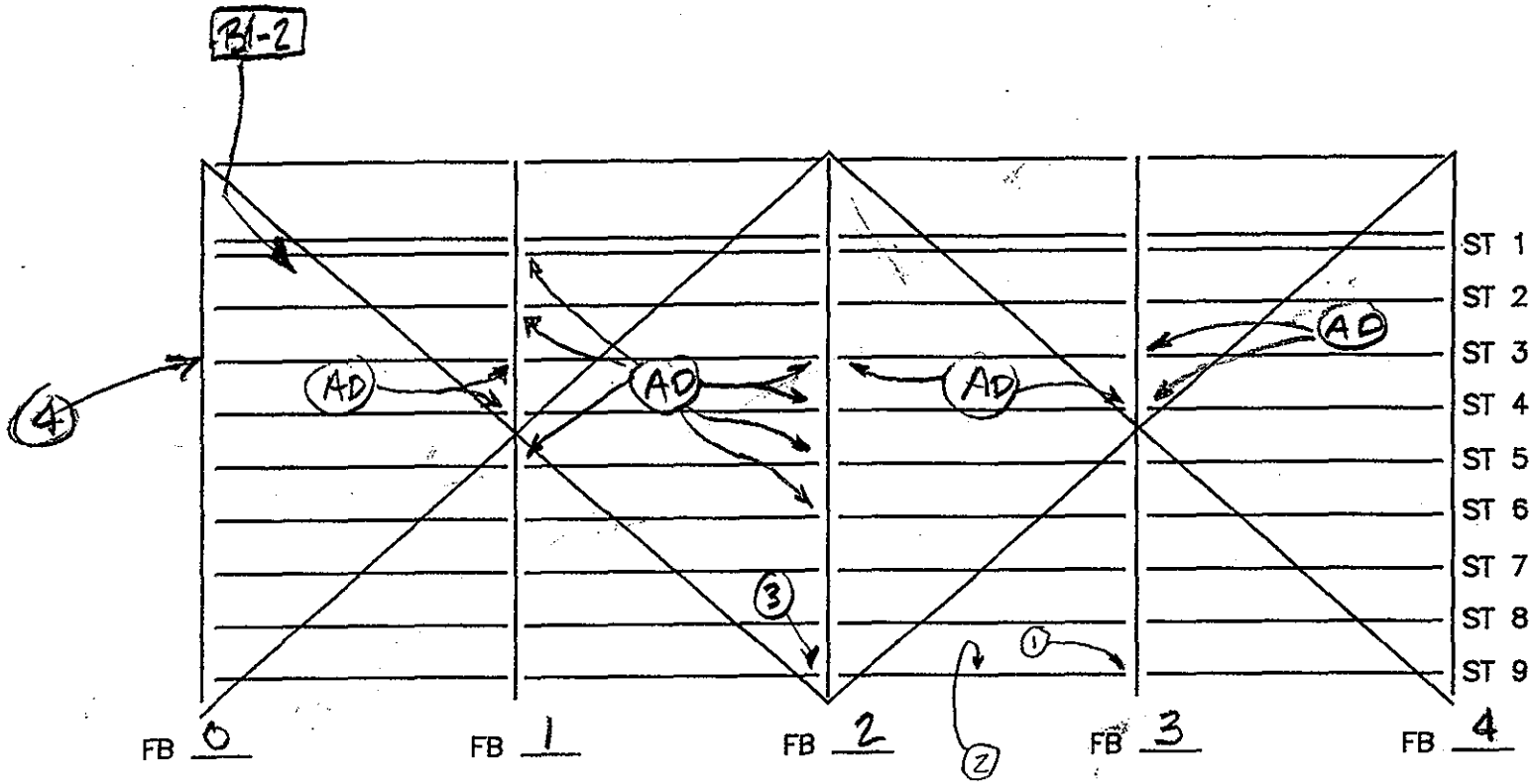

106
219

COVERING HOLE

① (CONT) - E. FACE OF STR HAS 1' ↑ × 1½' ↔ × ½" RPR PL ON WEB @ FLBM CONN. RPR PL HAS ¼" DP × 1½" × 1½" PITTING.

SPAN 6 GG ✓

NOTES:

① ⅛" PIT. F.H. OF WEST WEB - ½" ↕ HOLE @ BOT. OF STR. WEB. @ STR./FLBM CONN.
② ⅛" PIT. × ½ WIDTH OF BOT. FL.
③ 3/16" PIT × 4" ↑ ON W. WEB @ FLBM CONN.
④ NO LKG NOTED THRU DECK JT.

FLOOR SYSTEM	
DEPARTMENT OF THE ARMY NEW ENGLAND DIVISION CORPS OF ENGINEERS	
BOURNE HIGHWAY BRIDGE ROUTINE INSPECTION	
NOTES BY: LICHTENSTEIN CONSULTING ENGINEERS	
JOB #1784	DATE: 3/4/96
CREW: EL/WM	SHEET 1 OF 13

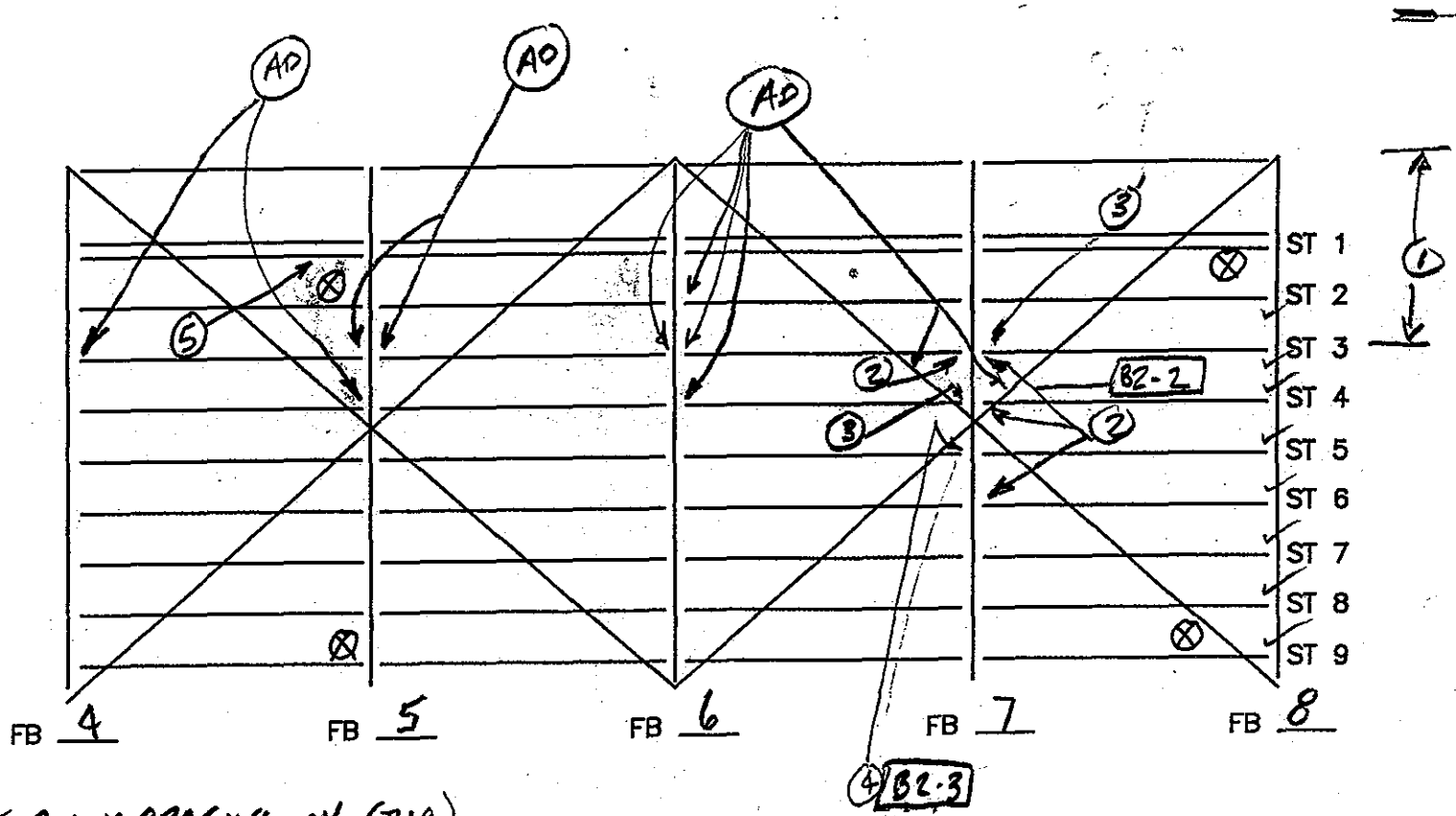

SPAN 6- FLBM X BRACING OK (TYP)
" - PAINT OK (TYP)
" - CATWALK OK (TYP)
" - U/S OF DECK OK (TYP)

LEGEND
⊗ = DOWNSPOUT

SPAN 6

NOTES:
1. HVY LEAKAGE THRU JT. - CAN SEE DAYLIGHT THRU JT. OPENING.
2. STRGR BOT FL FLAME CUT COPE 12" X 3"
3. ABRASION DUST BTWN STRGR BOT FL & STIFF ∠ = AO
4. STRGR TOP FL & WEB FLAME CUT COPE
5. LT RUST ON BOT FL, 3' LONG FROM FLBM. MOD RUST ON WEB OF STRGR ①, E. FACE @ DRAIN BRACKET CONN.

FLOOR SYSTEM	
DEPARTMENT OF THE ARMY NEW ENGLAND DIVISION CORPS OF ENGINEERS	
BOURNE HIGHWAY BRIDGE ROUTINE INSPECTION	
NOTES BY: LICHTENSTEIN CONSULTING ENGINEERS	
JOB #1784	DATE: 3-4-96
CREW: EL, WM	SHEET 2 OF 13

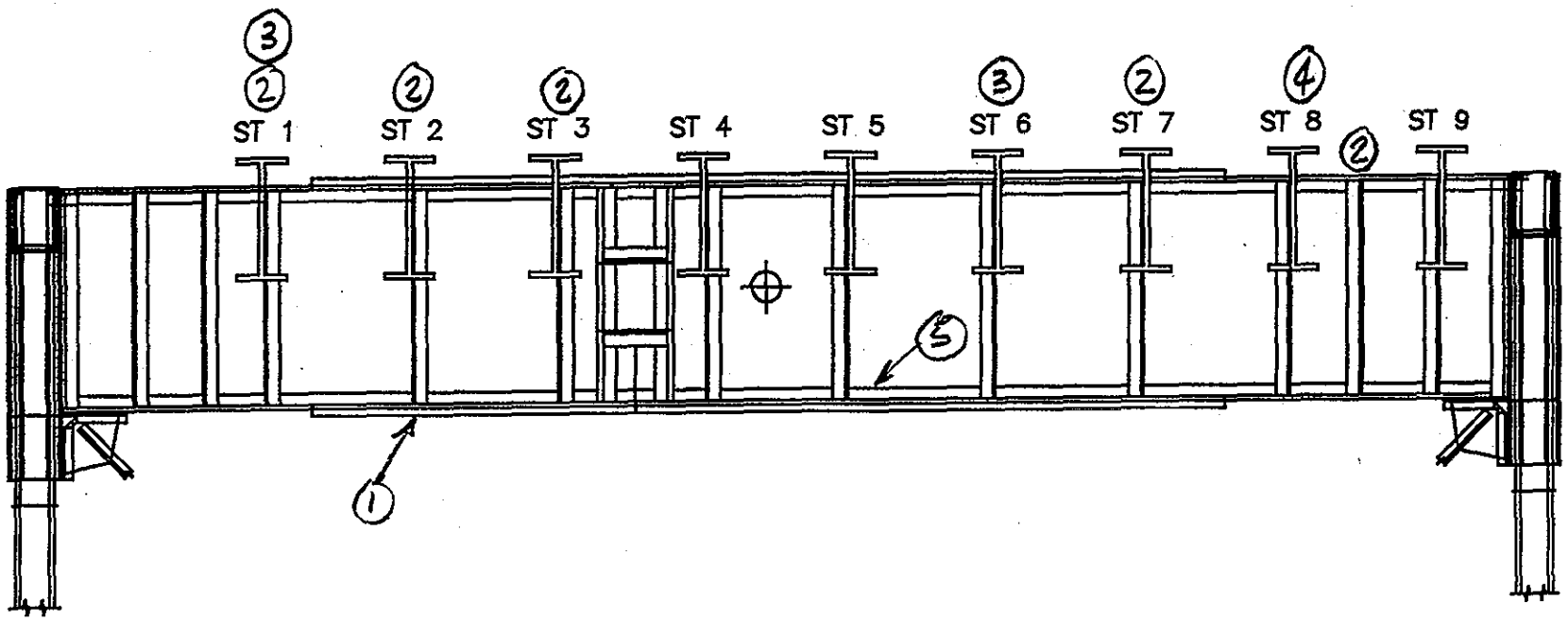

108
219

SPAN 6
FLOORBEAM O S ELEV.

NOTES:

1. NO BOT FL COV PL
2. 5" WIDE x PARTIAL HT. PL WELDED TO STIFF & OSL (UP TO ½ HT. BEGINNING @ TOP FL).
3. PITTING ON OSL OF STIFF & ⅛" DP x ¾ HT.
4. " " " " " " 3/16" DP x "
5. BURNED OFF PL, FULL LENGTH, JUST ABOVE BOT FL & VERT. LEG

FLOORBEAM	
DEPARTMENT OF THE ARMY NEW ENGLAND DIVISION CORPS OF ENGINEERS	
BOURNE HIGHWAY BRIDGE ROUTINE INSPECTION	
NOTES BY: LICHTENSTEIN CONSULTING ENGINEERS	
JOB #1784	DATE: 3·4·96
CREW: EL, WM	SHEET 4 OF 13

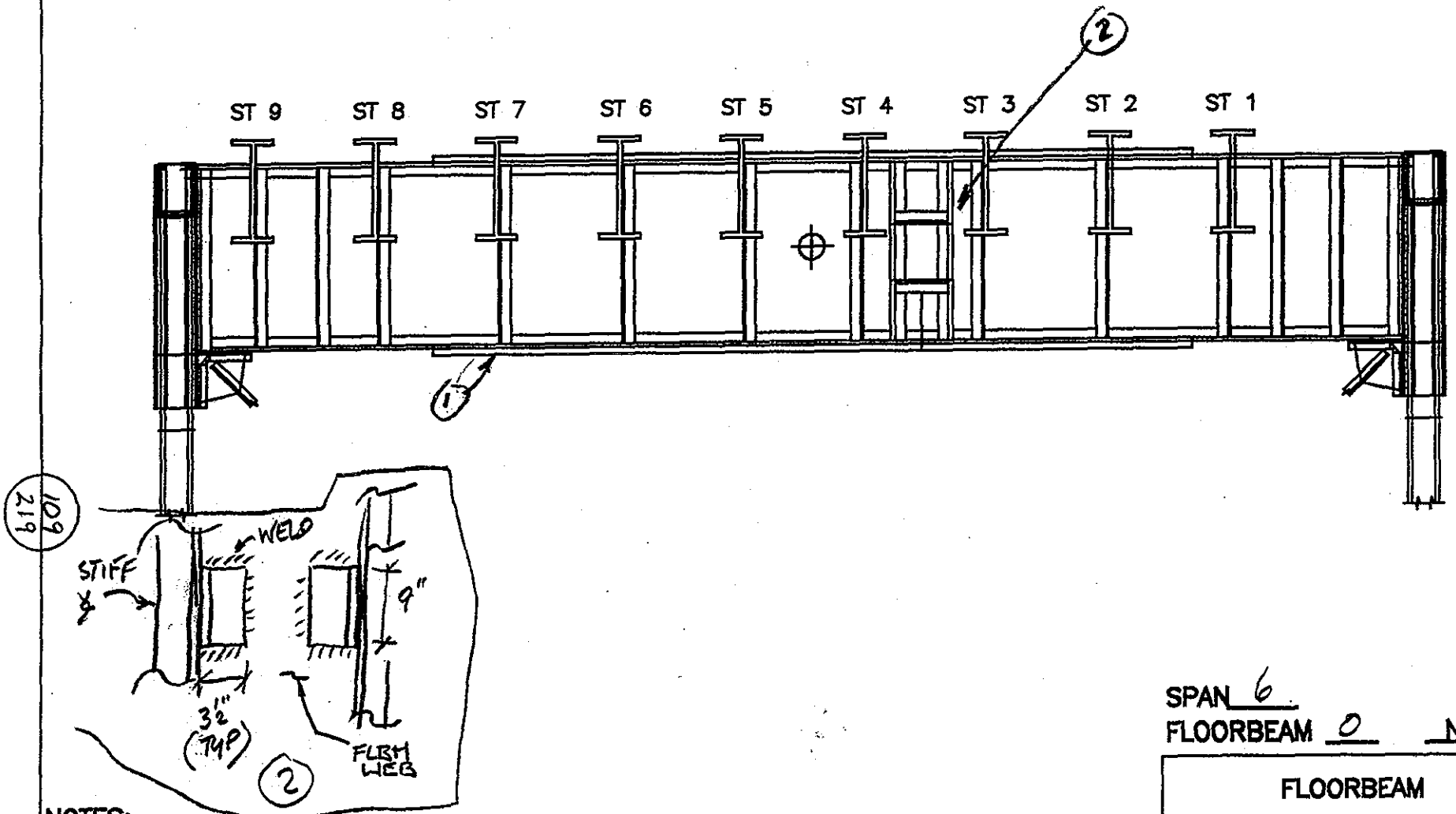

SPAN 6
FLOORBEAM 0 N ELEV.

NOTES:
① NO BOT. FL COV. PL
② LADDER BRACKET WELDED TO FLBM WEB - ALSO WELDED TO STIFF ∡'S

FLOORBEAM	
DEPARTMENT OF THE ARMY NEW ENGLAND DIVISION CORPS OF ENGINEERS	
BOURNE HIGHWAY BRIDGE ROUTINE INSPECTION	
NOTES BY: LICHTENSTEIN CONSULTING ENGINEERS	
JOB #1784	DATE: 3/4/96
CREW: EL, WM	SHEET 3 OF 13

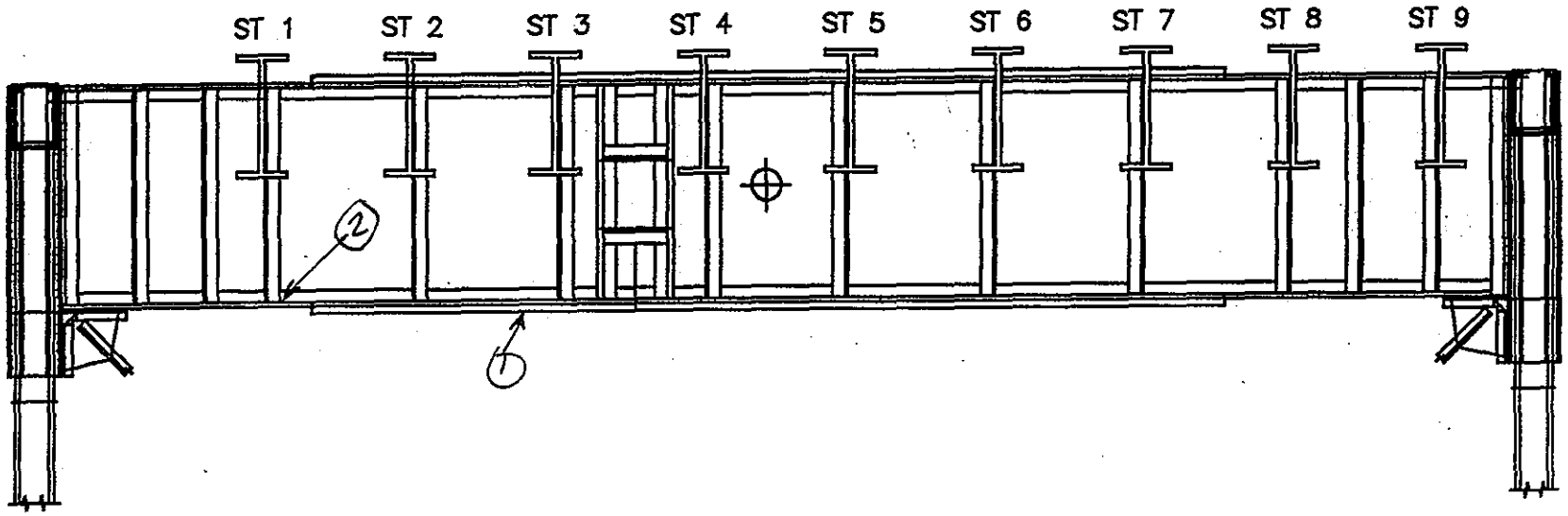

110
219

SPAN 6
FLOORBEAM 1 S ELEV.

NOTES:
1. NO BOT FL COV. PL
2. PITTING ON TOP OF BOT. FL 1/16" x 2" (N-S) x 20" (E-W)

FLOORBEAM

DEPARTMENT OF THE ARMY
NEW ENGLAND DIVISION CORPS OF ENGINEERS

BOURNE HIGHWAY BRIDGE
ROUTINE INSPECTION

NOTES BY: LICHTENSTEIN
CONSULTING ENGINEERS

JOB #1784 | DATE: 3-4-96
CREW: EL, WM | SHEET 5 OF 13

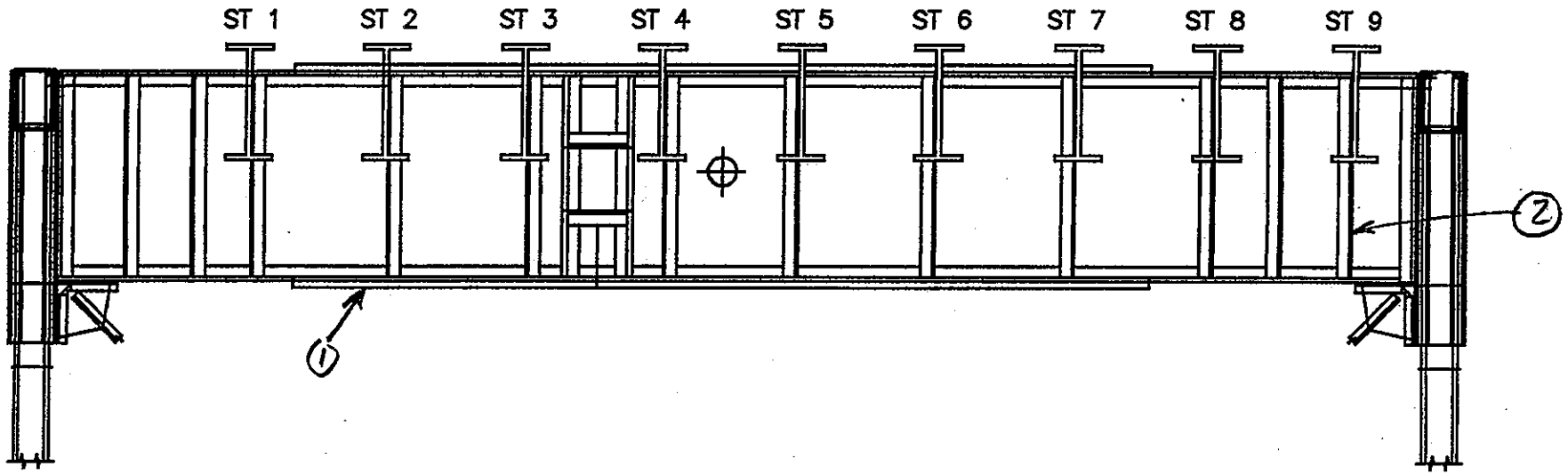

111
219

SPAN 6
FLOORBEAM 2 S ELEV.

NOTES:
1. NO BOT FL COV. PL
2. FULL HT PL WELDED TO STIFF & OSL

FLOORBEAM

DEPARTMENT OF THE ARMY
NEW ENGLAND DIVISION CORPS OF ENGINEERS

BOURNE HIGHWAY BRIDGE
ROUTINE INSPECTION

NOTES BY: LICHTENSTEIN
CONSULTING ENGINEERS

JOB #1784 | DATE: 3/4/96
CREW: EL, WM | SHEET 6 OF 13

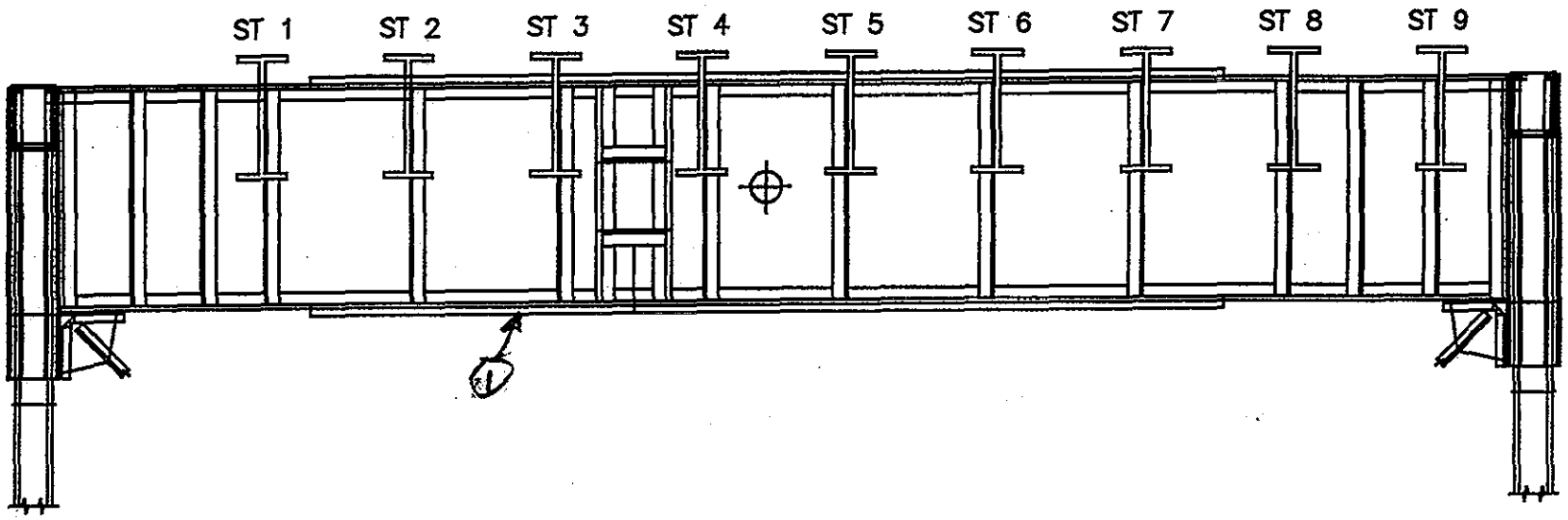

112
219

SPAN 6
FLOORBEAM 3 S ELEV.

NOTES:
1. NO BOT FL COV. PL
2. PITTING ON TOP OF BOT FL 1/8" DP x 3" (N-S) x 5" (E-W)

FLOORBEAM

DEPARTMENT OF THE ARMY
NEW ENGLAND DIVISION CORPS OF ENGINEERS

BOURNE HIGHWAY BRIDGE
ROUTINE INSPECTION

NOTES BY: LICHTENSTEIN
CONSULTING ENGINEERS

JOB #1784 | DATE: 3/4/96
CREW: EL, WM | SHEET 7 OF 13

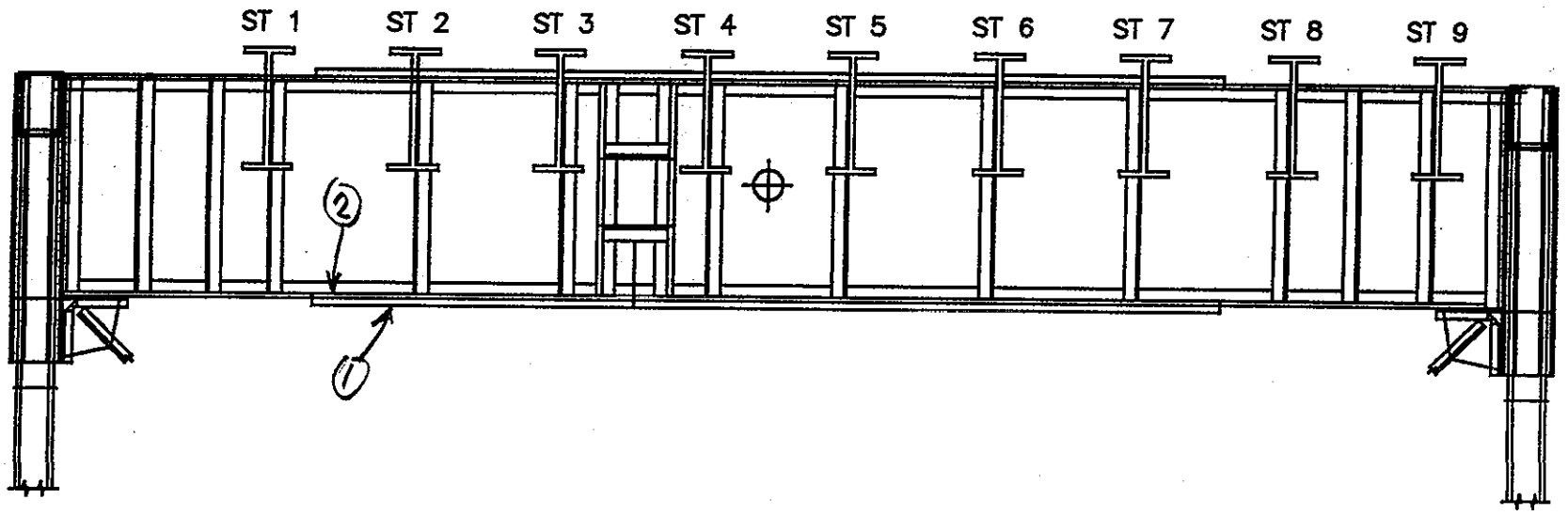

113
219

SPAN 6
FLOORBEAM 4 S ELEV.

NOTES:
1. NO BOT FL COV PL
2. PITTING ON TOP OF BOT FL 1/8" DP. x 6" (N-S) x 12" (E-W)

FLOORBEAM

DEPARTMENT OF THE ARMY
NEW ENGLAND DIVISION CORPS OF ENGINEERS

BOURNE HIGHWAY BRIDGE
ROUTINE INSPECTION

NOTES BY: LICHTENSTEIN
CONSULTING ENGINEERS

JOB #1784 | DATE: 3/4/96
CREW: EL, WM | SHEET 8 OF 13

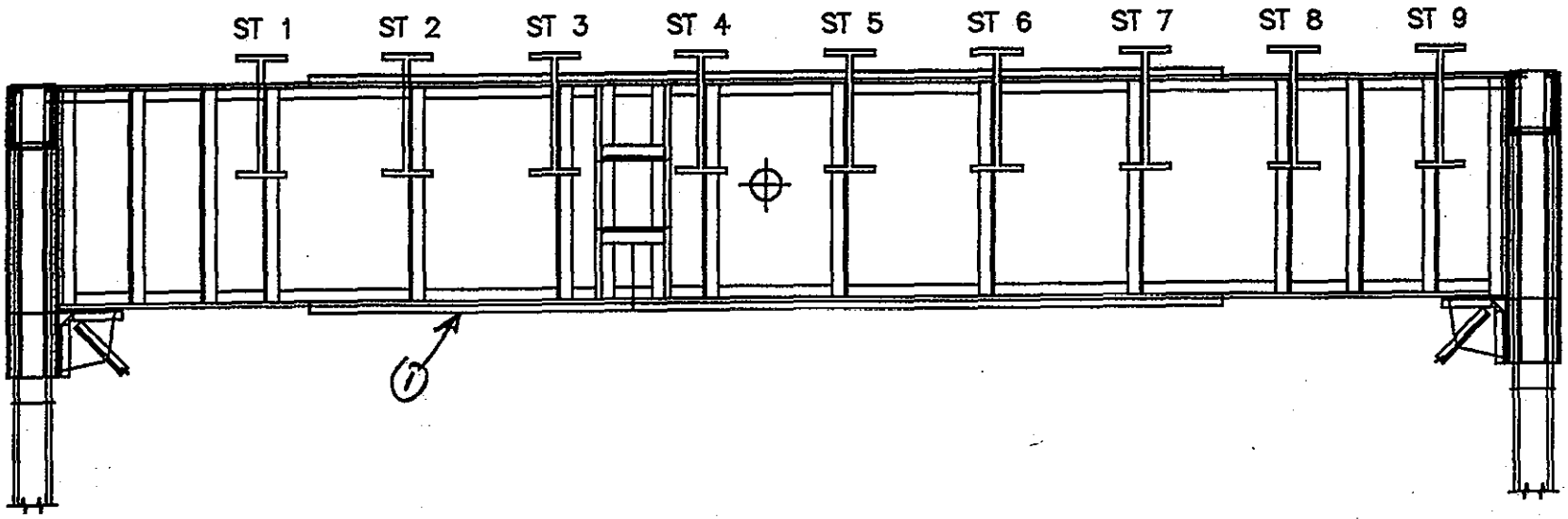

114
219

SPAN 6
FLOORBEAM 5 S ELEV.

NOTES:
(1) NO BOT. PL COV. PL

FLOORBEAM

DEPARTMENT OF THE ARMY
NEW ENGLAND DIVISION CORPS OF ENGINEERS

BOURNE HIGHWAY BRIDGE
ROUTINE INSPECTION

NOTES BY: LICHTENSTEIN
CONSULTING ENGINEERS

JOB #1784	DATE: 3/4/96
CREW: EL, WM	SHEET 9 OF 13

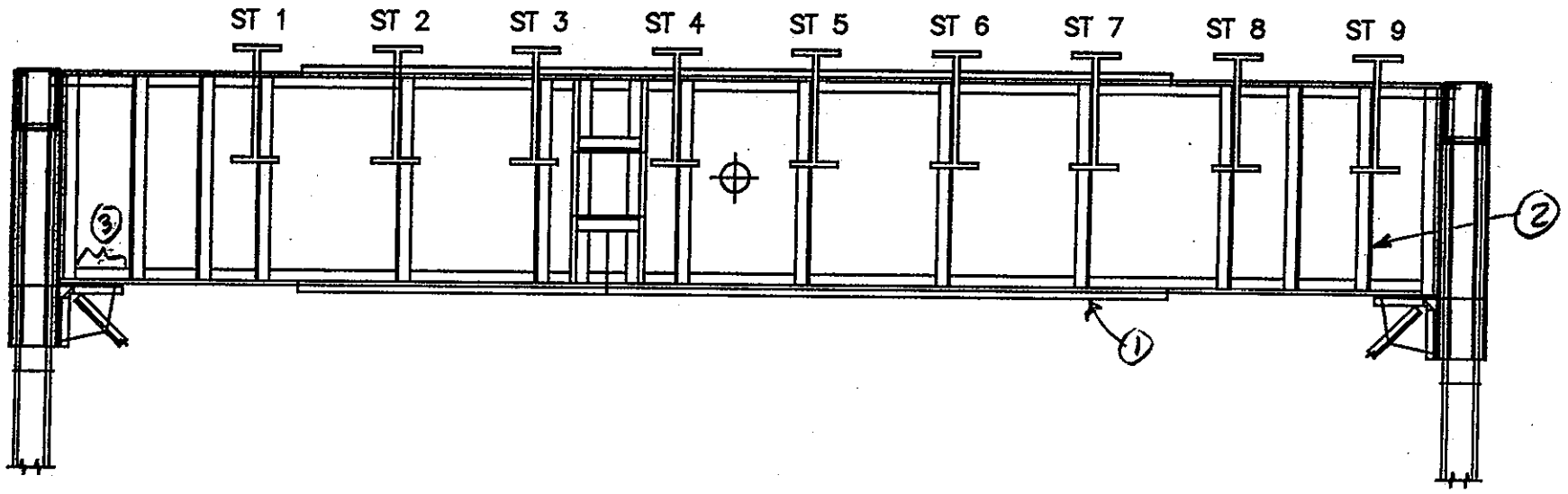

115
219

SPAN 6
FLOORBEAM 6 S ELEV.

NOTES:
(1) NO BOT FL COV. PL
(2) FULL HT. PL WELDED TO STIFF & OSL
(3) LT. RUST ALONG TOP OF BOT FL & VERT. LEG

FLOORBEAM

DEPARTMENT OF THE ARMY
NEW ENGLAND DIVISION CORPS OF ENGINEERS

BOURNE HIGHWAY BRIDGE
ROUTINE INSPECTION

NOTES BY: LICHTENSTEIN
CONSULTING ENGINEERS

JOB #1784	DATE: 3/4/96
CREW: EL, WM	SHEET 10 OF 13

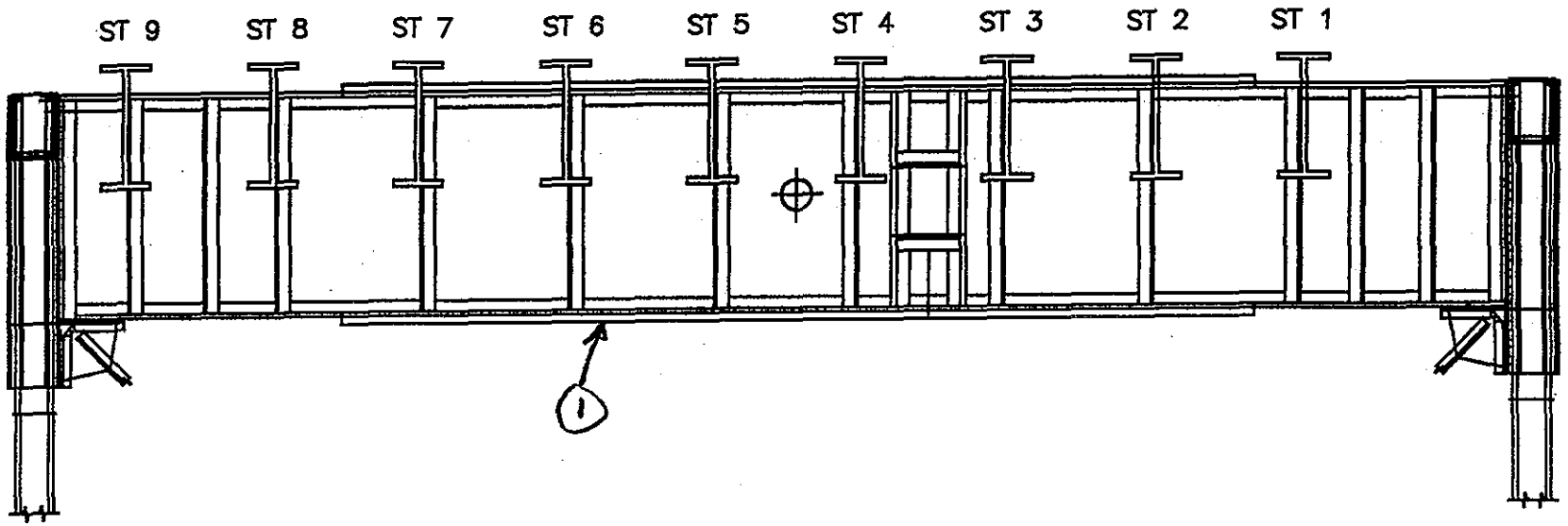

116
219

SPAN 6
FLOORBEAM 7 N ELEV.

NOTES:
1 No BOT FL COV PL

FLOORBEAM

DEPARTMENT OF THE ARMY
NEW ENGLAND DIVISION CORPS OF ENGINEERS

BOURNE HIGHWAY BRIDGE
ROUTINE INSPECTION

NOTES BY: LICHTENSTEIN
CONSULTING ENGINEERS

JOB #1784 | DATE: 3-4-96
CREW: EL, WM | SHEET 11 OF 13

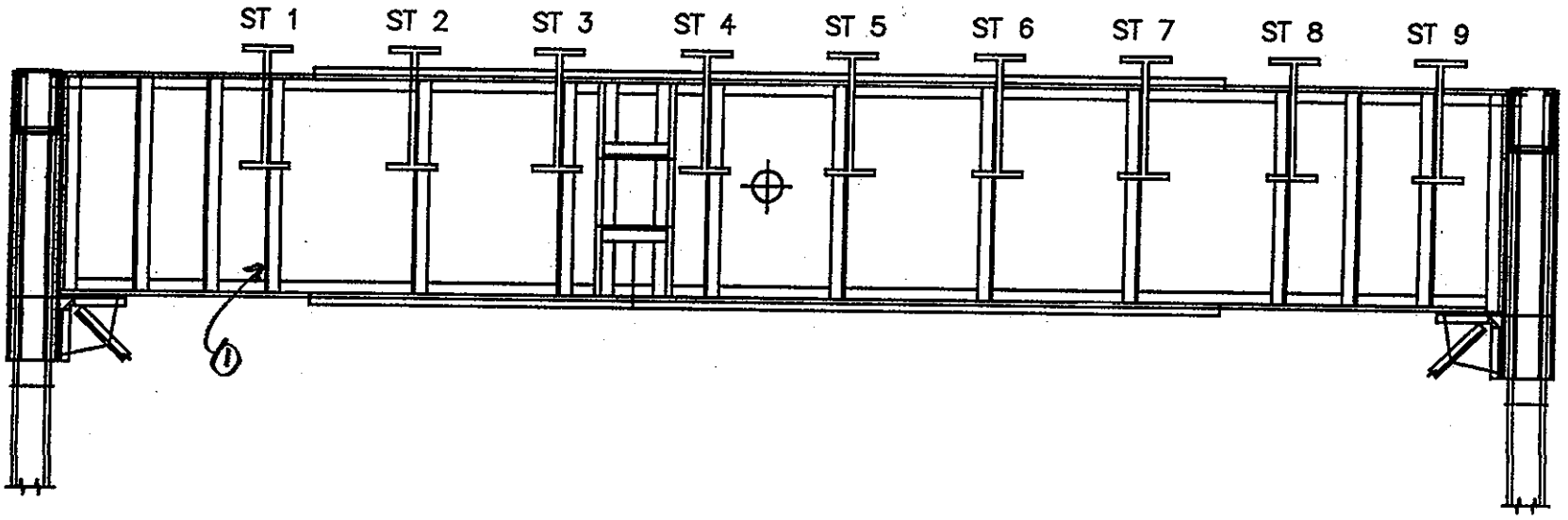

117
219

SPAN 6
FLOORBEAM 8 S ELEV.

NOTES:
- PL WELDED TO STIFF & OSL, 10" ↕

FLOORBEAM

DEPARTMENT OF THE ARMY
NEW ENGLAND DIVISION CORPS OF ENGINEERS

BOURNE HIGHWAY BRIDGE
ROUTINE INSPECTION

NOTES BY: LICHTENSTEIN
CONSULTING ENGINEERS

JOB #1784	DATE: 3-7-96
CREW: EL, WM	SHEET 12 OF 13

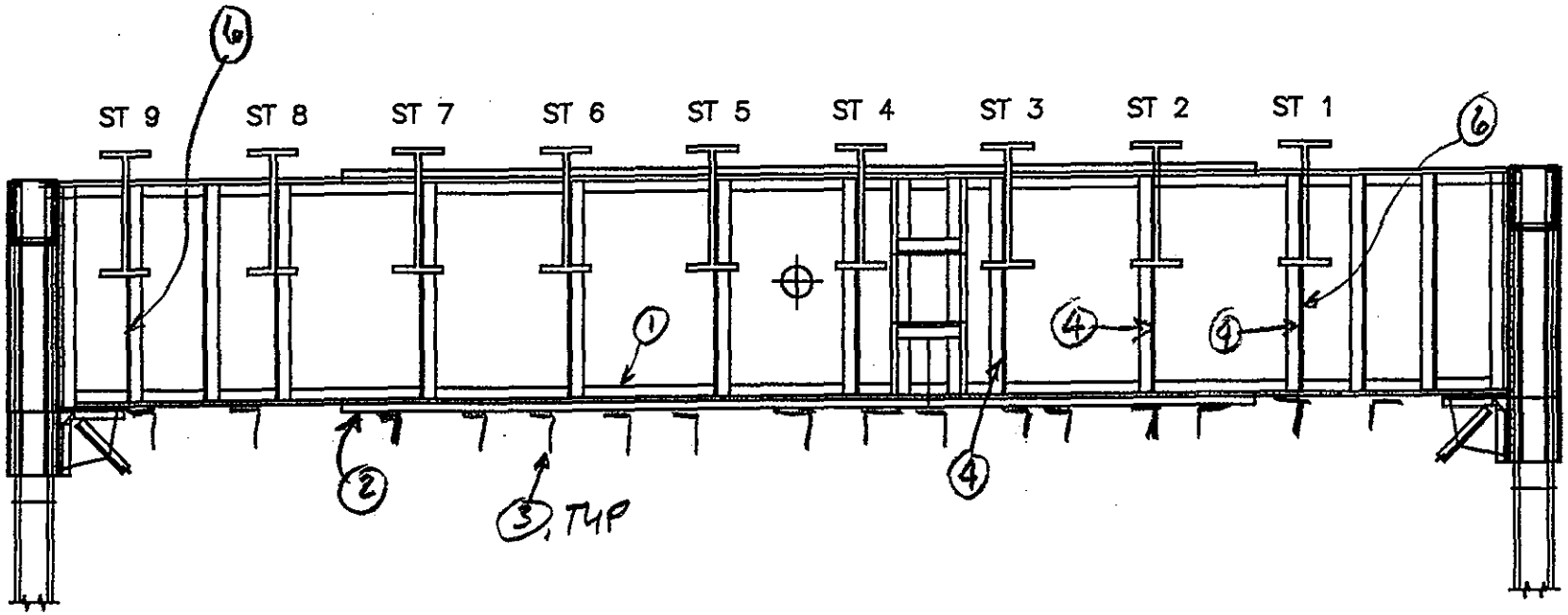

THP- 1/8" OF PITTING ON WEB x 50% OF HT, FULL LENGTH.

SPAN 6
FLOORBEAM 8 N ELEV.

NOTES:

1. BURNED OFF STUB OF OLD TROUGH. FULL LENGTH, JUST ABOVE BOT. PL & VERT. LEG.
2. NO BOT. COV. PL
3. & WELDED TO BOT. PL
4. FULL HT. PL WELDED TO STIFF & OSL 5" x 9/16"
5. SIM 4. NOT FULL HT, 6'-10" @ TOP PL.
6. MOD RUST, FULL HT. STIFF & OSL

FLOORBEAM	
DEPARTMENT OF THE ARMY NEW ENGLAND DIVISION CORPS OF ENGINEERS	
BOURNE HIGHWAY BRIDGE ROUTINE INSPECTION	
NOTES BY: LICHTENSTEIN CONSULTING ENGINEERS	
JOB #1784	DATE: 3-4-96
CREW: EL, WM	SHEET 13 OF 13

III. BEARINGS

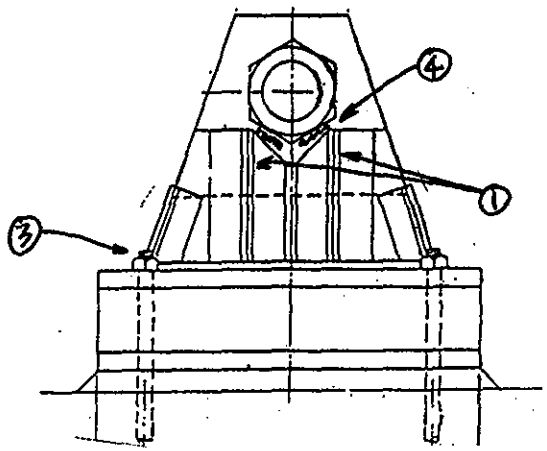

W ELEV.

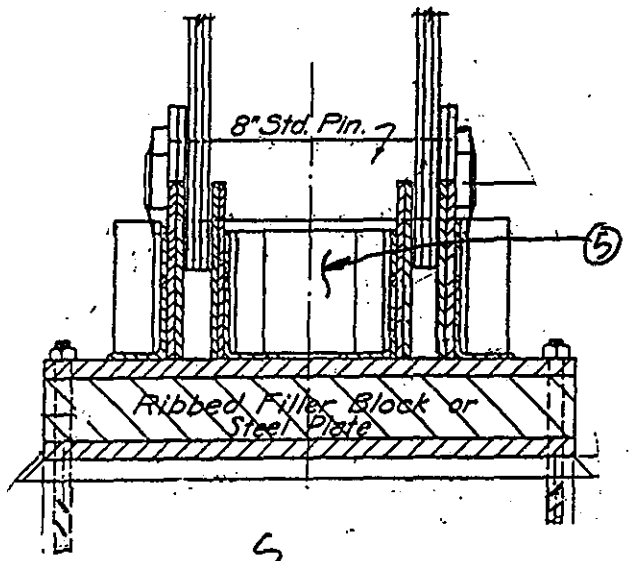

S ELEV.

119
219

PH B5-23
B6-2

W BEARING

PIER S. ABUT SPAN 7

NOTE: ANCHOR BOLT NUTS ARE SECURE & TIGHT

NOTES:

1. UP TO 1/2" (IR) BTWN ANGLES
2. LT-MED RUST ON 20% OF BRG. SURFACE AREA
3. MINIMAL LOSSES ON ANCHOR BOLT NUTS
4. UP TO 1/16" PITT. UNDER PIN NUT ON EXT. PIN NUTS
5. EXCESSIVE DEBRIS INSIDE PIN CAVITY

BEARINGS	
DEPARTMENT OF THE ARMY NEW ENGLAND DIVISION CORPS OF ENGINEERS	
BOURNE HIGHWAY BRIDGE ROUTINE INSPECTION	
NOTES BY: LICHTENSTEIN CONSULTING ENGINEERS	
JOB #1784	DATE: 3/19/96
CREW: WM / GG	SHEET 3 OF 11

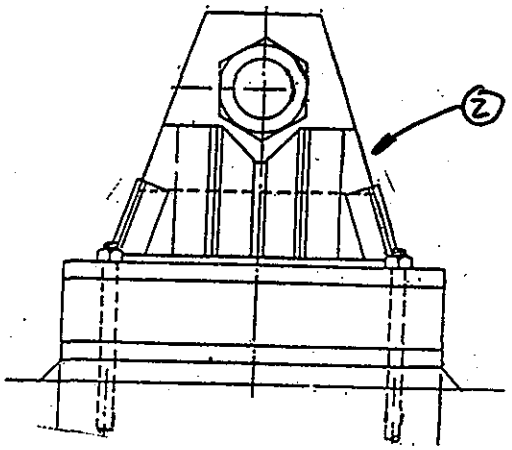

W ELEV.

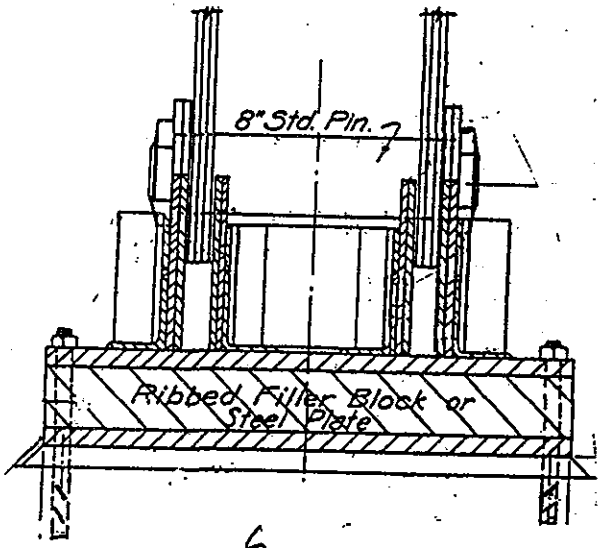

S ELEV.

120
219

PH BS-24
Bb-3

E BEARING

PIER S. ABUT SPAN 7

NOTE: ANCHOR BOLT NUTS ARE SECURE & TIGHT

NOTES:

1. SIM. COND AS WEST BRG., S. ABUT COND'S 1, 2, 3, 4, & 5
2. 90% OF STYROFOAM MISSING UNDER PIN CAVITY

BEARINGS

DEPARTMENT OF THE ARMY
NEW ENGLAND DIVISION CORPS OF ENGINEERS

BOURNE HIGHWAY BRIDGE
ROUTINE INSPECTION

NOTES BY: LICHTENSTEIN
CONSULTING ENGINEERS

JOB #1784 | DATE: 9/19/96
CREW: WM/GG | SHEET 2 OF 11

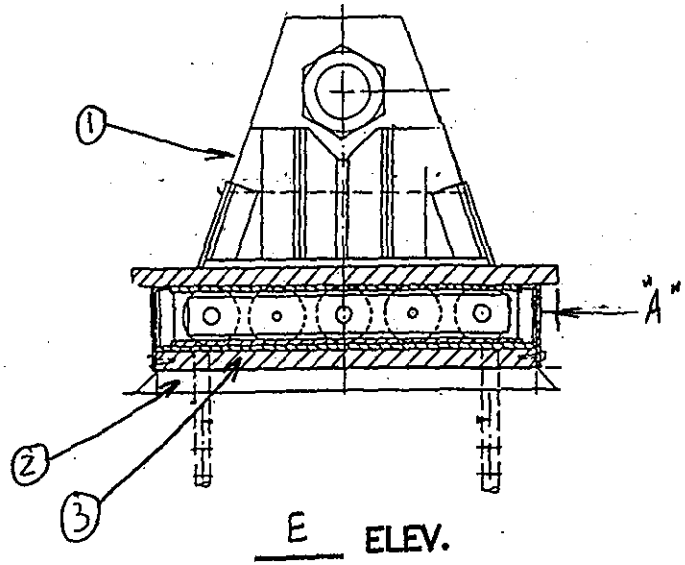

E ELEV.

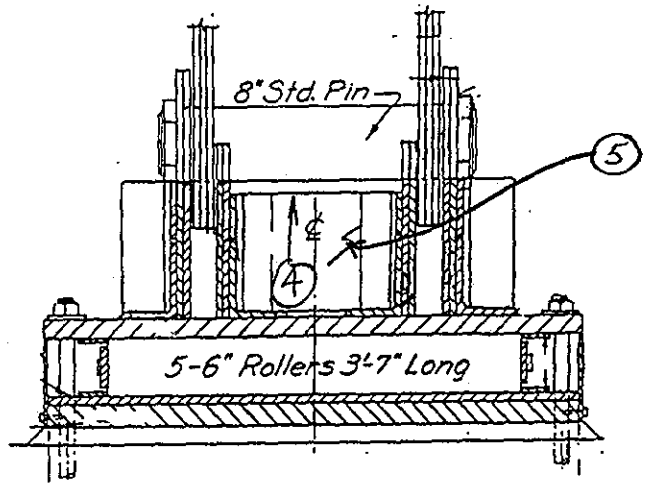

N ELEV.

PH Bb - 7

W BEARING

PIER 5 SPAN 7

NOTE: • PIN NUTS ARE SECURE & TIGHT
• BRG. ANCHOR BOLT COVER BOXES ARE IN SATIS. COND.

NOTES: (5) MISSING STYROFOAM & MOD. DEBRIS.
(1) LT. RUST ON < 10% OF BRG. SURFACE AREA BOTH EAST & WEST SIDES
(2) 3 - MISS. BOLTS OUT OF 18; 6 LOOSE BOLTS OUT OF 18 ON BRG. ROLLER COVER BOX ON EAST SIDE
(3) 1 - (MB) OUT OF 18; 8 (LB) OF 18 ON BRG. ROLLER COVER BOX - WEST SIDE
(4) LT. RUST ON BOTTOM OF PIN W/ UP TO 1/16" LOSS ON BOTTOM OF PIN.

"A"	NW: 1"	NE: 1"	
	SW: 1 7/8"	SE: 1 7/8"	T = 40 °F

BEARINGS

DEPARTMENT OF THE ARMY
NEW ENGLAND DIVISION CORPS OF ENGINEERS

BOURNE HIGHWAY BRIDGE
ROUTINE INSPECTION

NOTES BY: LICHTENSTEIN
CONSULTING ENGINEERS

JOB #1784 DATE: 3/19/96
CREW: WM/GG SHEET 11 OF 11

121
219

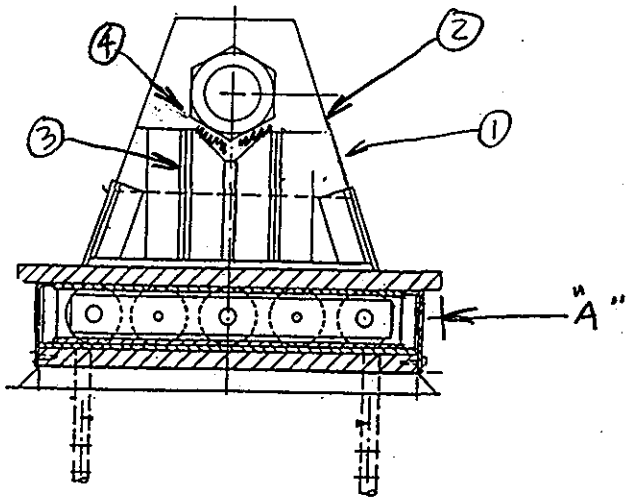

W ELEV.

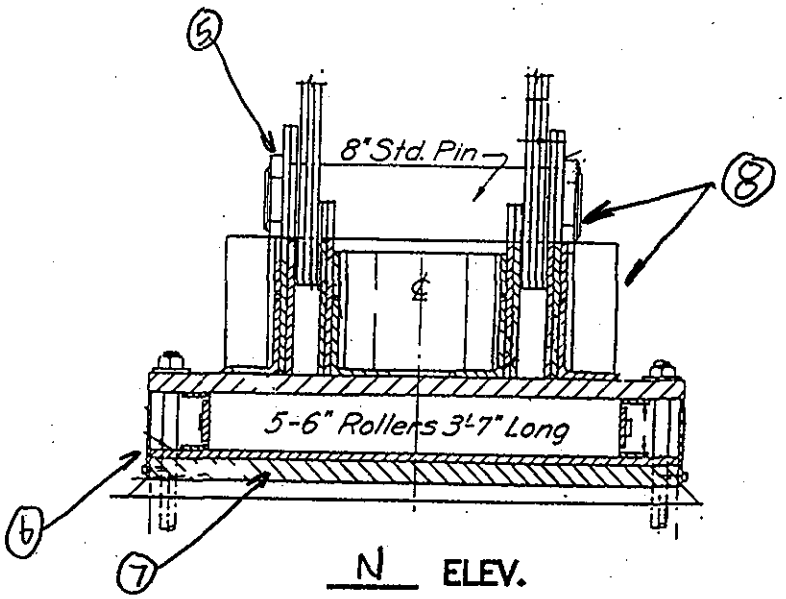

N ELEV.

122
219

PH B6-10

NOTE: · PIN NUTS ARE SECURE & TIGHT

· BRG. ANCHOR BOLT COVER BOXES ARE IN SATIS. COND.

(7) 2-(MB) OUT OF 18, 8-(LB) OF 18 - BRG. ROLLER BOX COVER, - WEST SIDE

(8) LT-MED RUST ON 50% OF SURFACE AREA - WEST SIDE; < 10% ON EAST SIDE.

E BEARING

PIER 5 SPAN 7

NOTES:

(1) STYROFOAM MISSING INSIDE - MOD. DEBRIS INSIDE CAVITY

(2) MED-HVY RUST FORMING INSIDE PIN CAVITY - SOUTH SIDE

(3) UP TO 1/2" (IR) BTWN ANGLES - TYP.

(4) 1/16" PITT. UNDER PIN ON WEST SIDE

(5) 3/16" GAP BTWN PIN NUT & PIN PL. - EAST ELEV.

(6) 8-(LB) OUT OF 18 BOLTS, 2-(MB) OUT OF 18 ON BRG. ROLLER BOX COVER, EAST EL

"A" NW: 1 1/8" NE: 5/8"

SW: 1 3/4" SE: 2" [T = 40°F]

BEARINGS

DEPARTMENT OF THE ARMY
NEW ENGLAND DIVISION CORPS OF ENGINEERS

BOURNE HIGHWAY BRIDGE
ROUTINE INSPECTION

NOTES BY: LICHTENSTEIN
CONSULTING ENGINEERS

JOB #1784 DATE: 3/19/96

CREW: WM / GG SHEET 10 OF 11

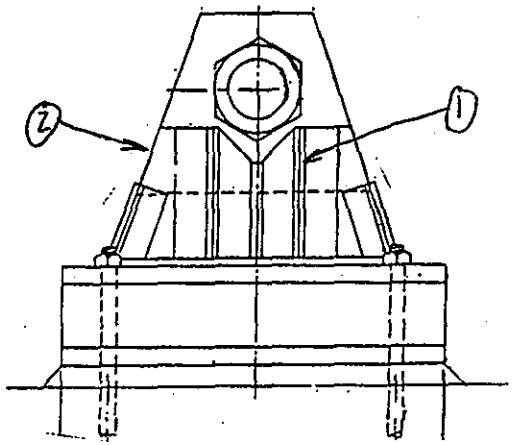

E ELEV.

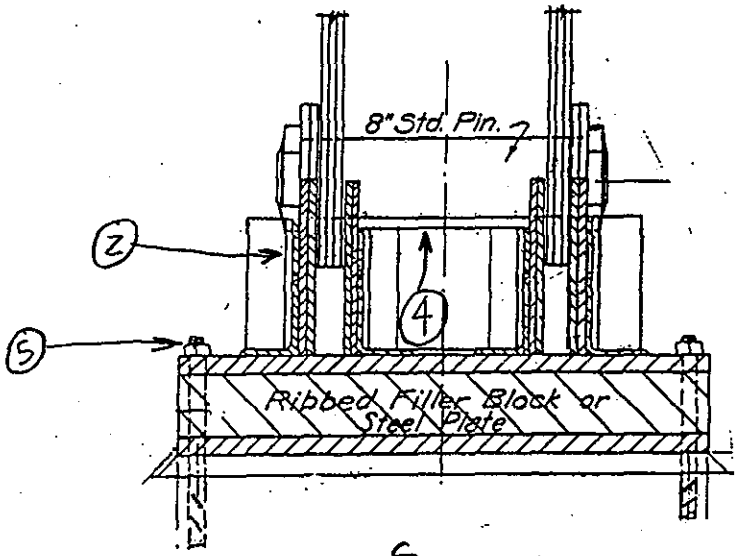

S ELEV.

123
219

PH B6 - B

W BEARING

PIER 5 SPAN 5

NOTE: • PIN NUTS ARE SECURE & TIGHT
• ANCHOR BOLT NUTS TIGHT

NOTES:

1. UP TO 1/2" (ER) BTWN ANGLES
2. LT. RUST ON LESS THAN 20% OF BRG. SURFACE
3. NORTH SIDE OF PIN CAVITY MISSING STYROFOAM - MODERATE DEBRIS IN CAVITY
4. LT - MED. RUST ON BOT. OF PIN @ STYROFOAM INTERFACE - UP TO 1/16" LOSS ON PIN
5. LT. RUST ON ANCHOR BOLT NUTS

BEARINGS	
DEPARTMENT OF THE ARMY NEW ENGLAND DIVISION CORPS OF ENGINEERS	
BOURNE HIGHWAY BRIDGE ROUTINE INSPECTION	
NOTES BY: LICHTENSTEIN CONSULTING ENGINEERS	
JOB #1784	DATE: 3/19/96
CREW: WM / GG	SHEET 8 OF 11

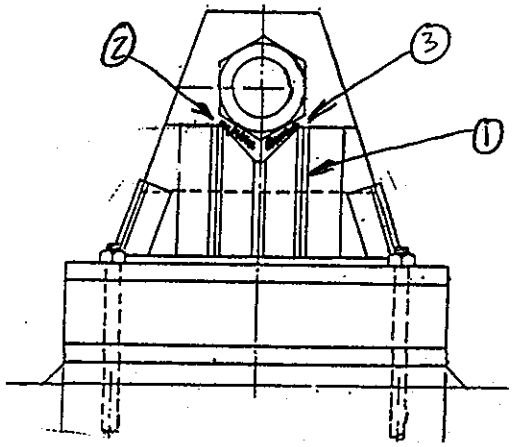

W ELEV.

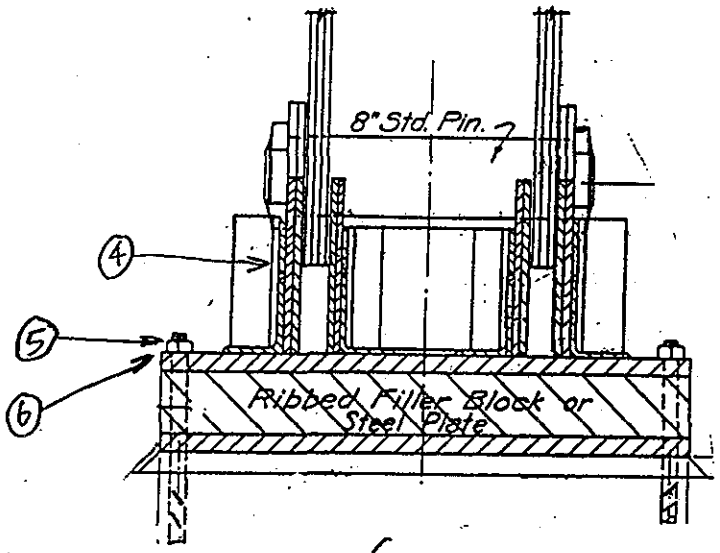

S ELEV.

124/219

PH B6-9

E BEARING

PIER 5 SPAN 5

NOTE: • PIN NUTS ARE SECURE & TIGHT
• ANCHOR BOLT NUTS ARE TIGHT

NOTES:

1. UP TO 1/2" (1R) BTWN ANGLES
2. UP TO 1/8" PITT. UNDER PIN ON EXT. PIN PL - WEST. ELEV.
3. SIM. TO COND (2) - EAST EL.
4. LT-MED RUST ON 50% OF BRG. SURFACE AREA - WEST EL.; EAST EL. < 10%
5. MED-HVY RUST ON ANCHOR BOLT NUTS ON WEST SIDE, -
6. N.W. ANCHOR BOLT NUT HAS UP TO 25% LOSS ON NUT.

BEARINGS

DEPARTMENT OF THE ARMY
NEW ENGLAND DIVISION CORPS OF ENGINEERS

BOURNE HIGHWAY BRIDGE
ROUTINE INSPECTION

NOTES BY: LICHTENSTEIN
CONSULTING ENGINEERS

JOB #1784	DATE: 3/19/96
CREW: WM, GG	SHEET 9 OF 11

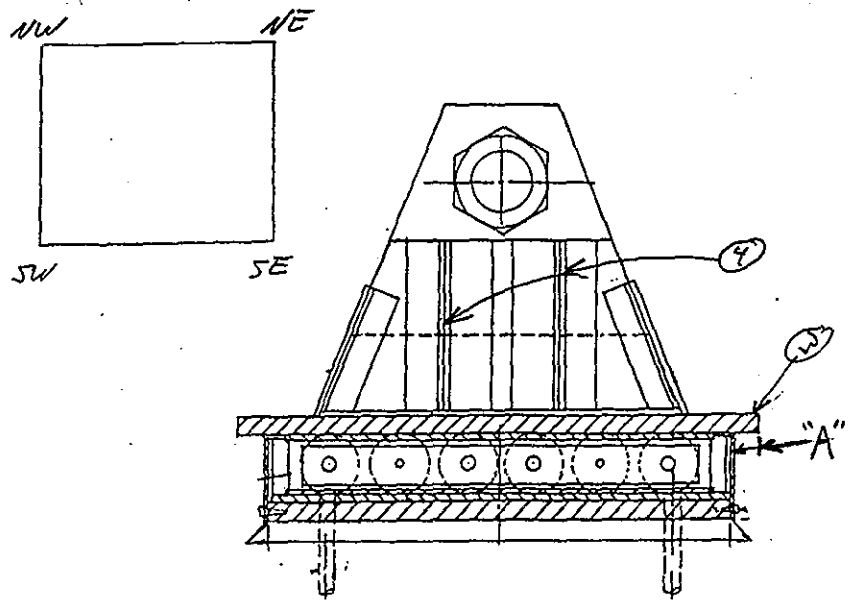

E ELEV.

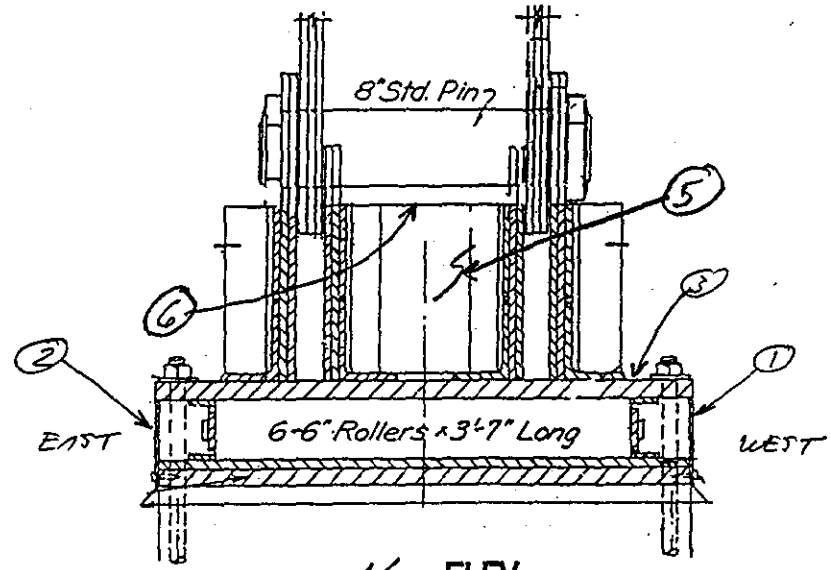

N ELEV.

125
219

NOTE: PIN NUTS ARE SECURE & TIGHT.
: ANCHOR BOLT NUTS ARE TIGHT.
: LIGHT RUST ON < 20% OF BRG. SURFACE.

W BEARING

Bearing Plate Measurements "A":

NW - 2 1/16"
NE - 2 3/16"
SW - 2 1/8"
SE - 2 1/8"

T = 40°F

PIER 3 SPAN 5

NOTES:

General: Movement noted under live load.
① OF 19 total - bolts on west face, 13 are loose, 2 missing.
② OF 19 " " " east face, 11 " ", 1 missing.
③ Moderate to heavy rust w/scale on base plate. Pin looks ok!
④ Up to 1/2" IR between outstanding legs of vertical angles directly under pin.
⑤ NORTH SIDE PIN CAVITY MISSING STYROFOAM, MOD. DEBRIS.
⑥ LT-MED RUST ON BOT. PIN @ STYROFOAM INTERFACE, UP TO 1/16" PIN LOSS.

BEARINGS	
DEPARTMENT OF THE ARMY NEW ENGLAND DIVISION CORPS OF ENGINEERS	
BOURNE HIGHWAY BRIDGE ROUTINE INSPECTION	
NOTES BY: LICHTENSTEIN CONSULTING ENGINEERS	
JOB #1784	DATE: 3/19/96
CREW: JB/PWN	SHEET 2 OF 4

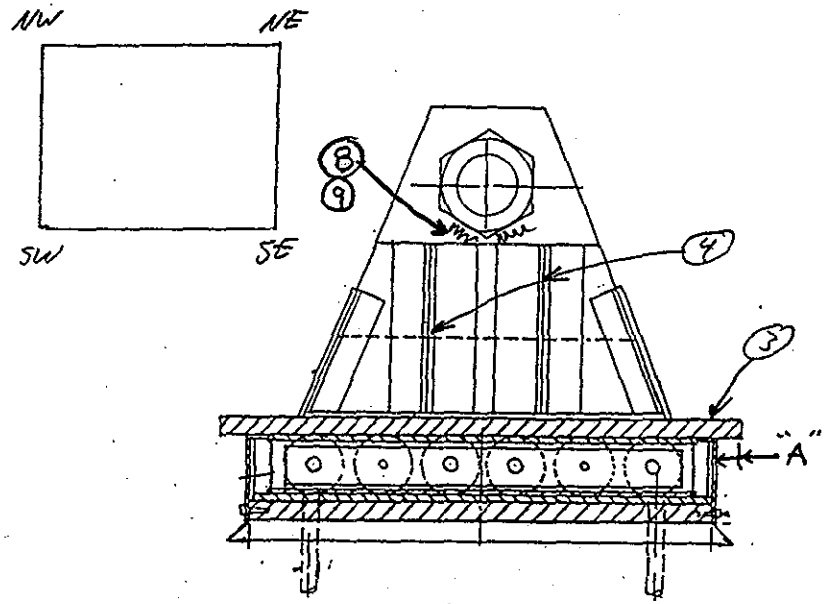

W ELEV.

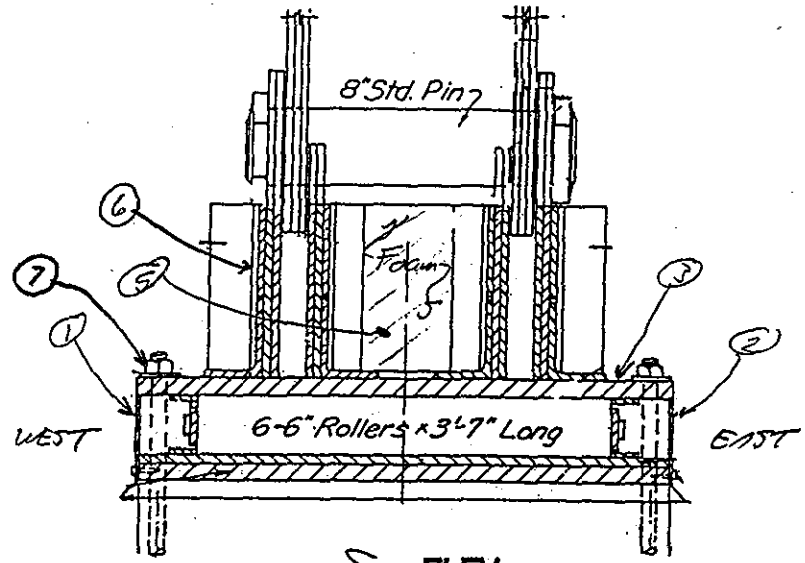

S ELEV.

126
219

(7) MED.-HVY. RUST ON ANCHOR BOLT NUTS ON W. SIDE, N.W. ANCHOR BOLT NUT HAS 25% LOSS.
(8) UP TO 1/8" PITT. UNDER PIN ON EXT. PIN ℞ – WEST ELEV.
(9) " " 1/16" " " " " " " " – EAST ELEV.

E BEARING

Bearing Plate Measurements "A"

NW –	2 7/16"
NE –	2 1/4"
SW –	2 5/8"
SE –	2 3/4"

T = 40°F

PIER 3 SPAN 5

NOTES:

General: Movement noted under live load.
(1) OF 19 total: bolts on west face, 13 are loose.
(2) OF 19 " " " east face, 5 are loose 1 missing.
(3) Moderate to heavy rust w/scale on base plate.
(4) Up to 1/2" IR between outstanding legs of vertical angles directly beneath pin.
(5) Foam insulation beneath pin partially missing.
(6) LT-MED. RUST ON 50% OF BRG. SURFACE AREA, W. EL., <10% E. EL.

BEARINGS

DEPARTMENT OF THE ARMY
NEW ENGLAND DIVISION CORPS OF ENGINEERS
BOURNE HIGHWAY BRIDGE
ROUTINE INSPECTION

NOTES BY: LICHTENSTEIN CONSULTING ENGINEERS

JOB #1784 | DATE: 3/19/96
CREW: JB/PWN | SHEET 7 OF 4

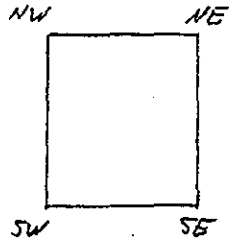

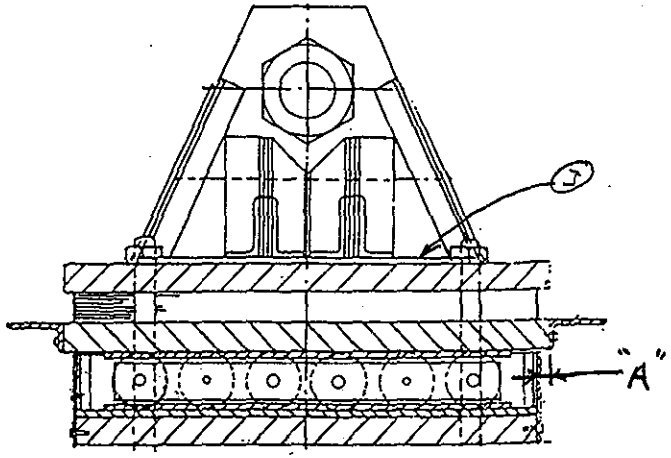

E ELEV.

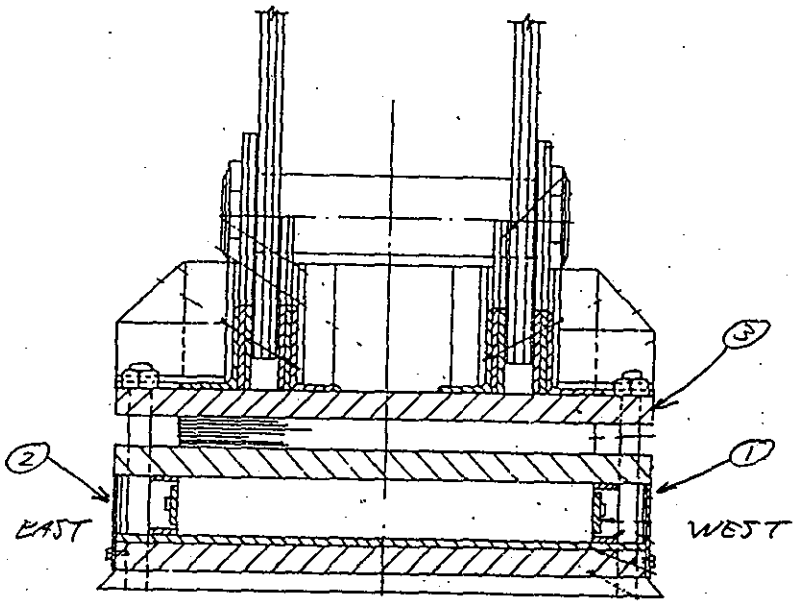

N ELEV.

127
219

Bearing Plate Measurements "A"

NW - 2 1/8"
NE - 2 1/16"
SW - 0"
SE - -1/16" T = 40°F

W BEARING

PIER 3 SPAN 3

NOTES:

GENERAL: Movement noted under Live Load

① OF 21 Total bolts on west face, 10 are loose, 1 is missing.

② OF 21 " " " " east face, 16 " " .

③ Moderate to heavy rust w/scale on base plate. Pin Looks OK!

BEARINGS	
DEPARTMENT OF THE ARMY NEW ENGLAND DIVISION CORPS OF ENGINEERS	
BOURNE HIGHWAY BRIDGE ROUTINE INSPECTION	
NOTES BY: LICHTENSTEIN CONSULTING ENGINEERS	
JOB #1784	DATE: 3/19/96
CREW: JB/PWN	SHEET 4 OF 4

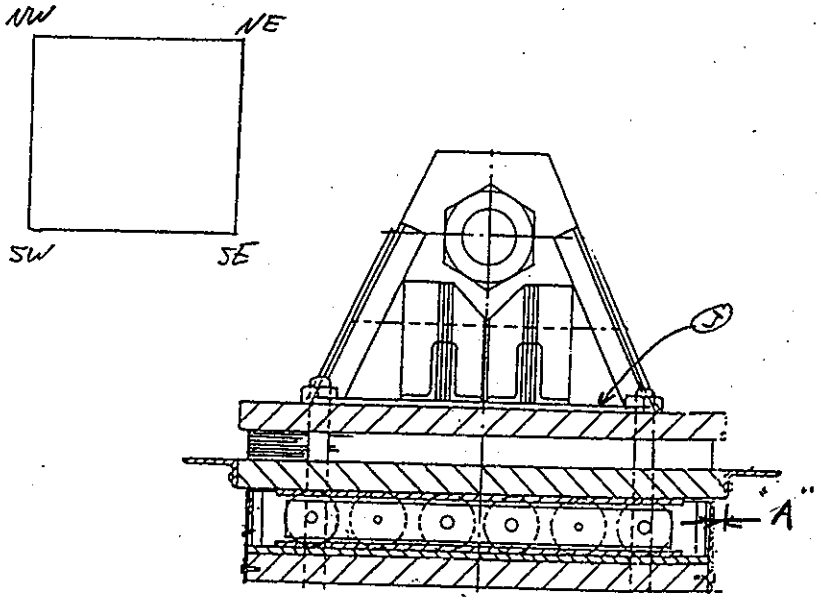

W ELEV.

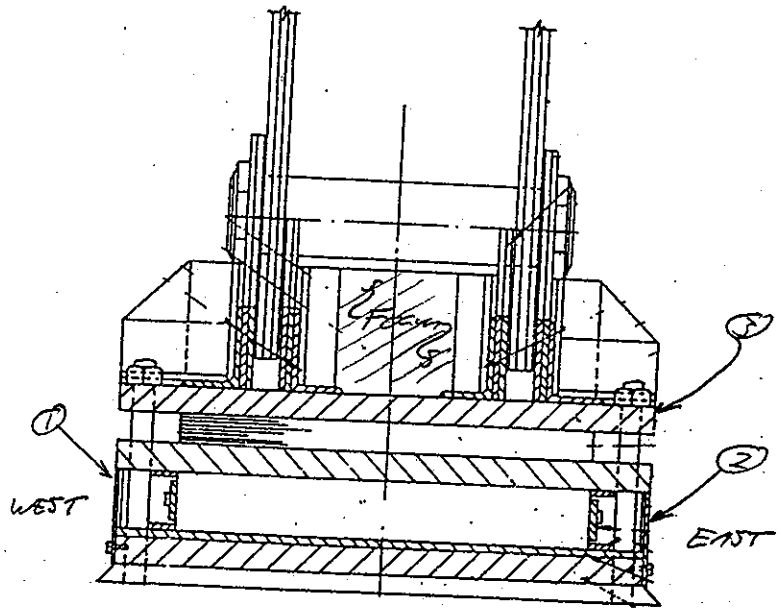

S ELEV.

E BEARING

PIER 3 SPAN 3

Bearing Plate Measurements "A"

NW - 1 9/16"
NE - 1 5/8"
SW - 0"
SE - 0"

T = 40°F

NOTES:

General: Movement noted under Live Load.
① OF 21 Total bolts on west face, 4 are loose, 1 missing.
② OF 21 " " " east face, 9 are loose.
③ Moderate to heavy rust w/scale on base plate. Pin OK, but area beneath Pin partially filled w/sand & debris. Foam insulation beginning to degenerate.

BEARINGS	
DEPARTMENT OF THE ARMY NEW ENGLAND DIVISION CORPS OF ENGINEERS	
BOURNE HIGHWAY BRIDGE ROUTINE INSPECTION	
NOTES BY: LICHTENSTEIN CONSULTING ENGINEERS	
JOB #1784	DATE: 3/19/96
CREW: JB/PWN	SHEET 3 OF 4

128
219

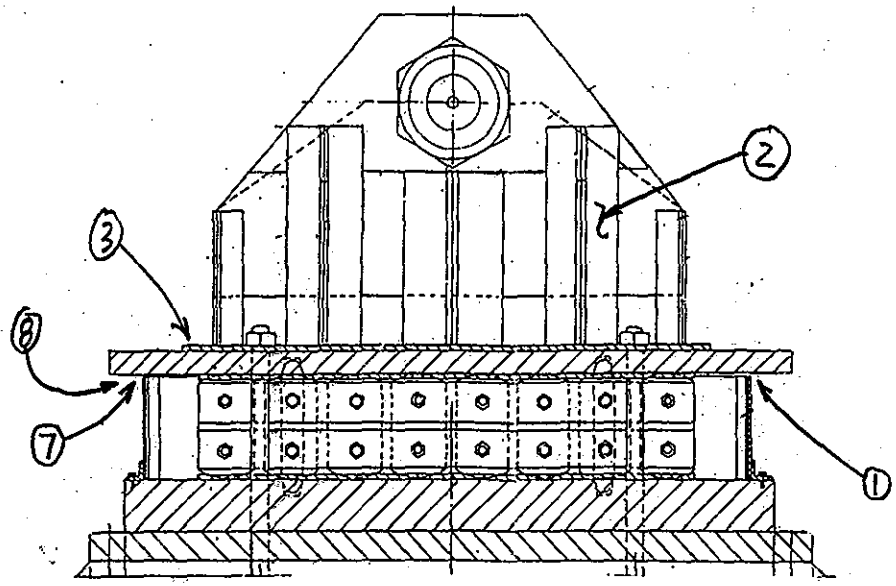

E ELEV.

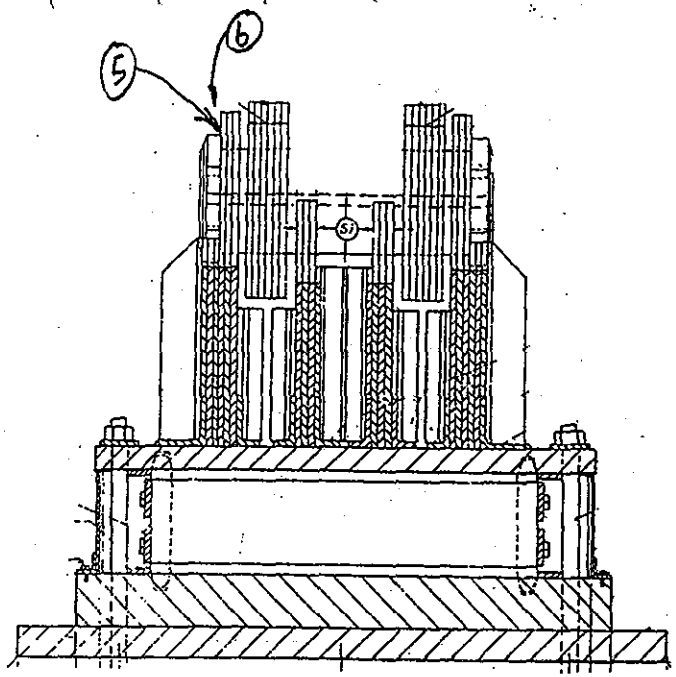

N ELEV.

PH B5-14-17

W BEARING

PIER 1 SPAN 1 & 3

Typ. Note: • Pin nuts are secure & tight
• Anchor bolt nuts secure & tight

(7). Up to 1/4" (IR) Btwn Brg Pl & Top of Brg. - 30" length (IR) on S.E. Corner
(8) 7/16" Gap Btwn Brg. Pl & Top of Brg - S.E. Corner.

NOTES:

(1) Protective sheet metal covering torn off on East Elev. - Half missing covering on S. Elev entirely missing.
(2) Corrosion forming on gusset Pl nuts - Less than 5% of area - East & West Elev.'s.
(3) Lt rust forming on 20% of surface area of Brg.
(4) Lt-Med rust forming on int. surfaces over 90% of area
(5). Lt-Med debris build-up btwn pin Pl & gusset Pl's E. & W. Elev's.
(6) East side missing styrofoam btwn Pl's.

BEARINGS	
DEPARTMENT OF THE ARMY NEW ENGLAND DIVISION CORPS OF ENGINEERS	
BOURNE HIGHWAY BRIDGE ROUTINE INSPECTION	
NOTES BY: LICHTENSTEIN CONSULTING ENGINEERS	
JOB #1784	DATE: 3/19/96
CREW: WM/GG	SHEET 6 OF 11

129/219

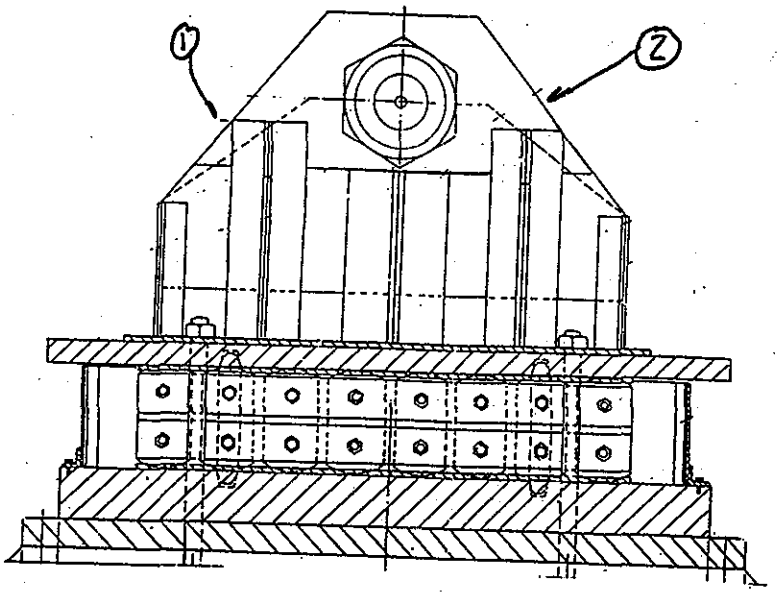

W ELEV.

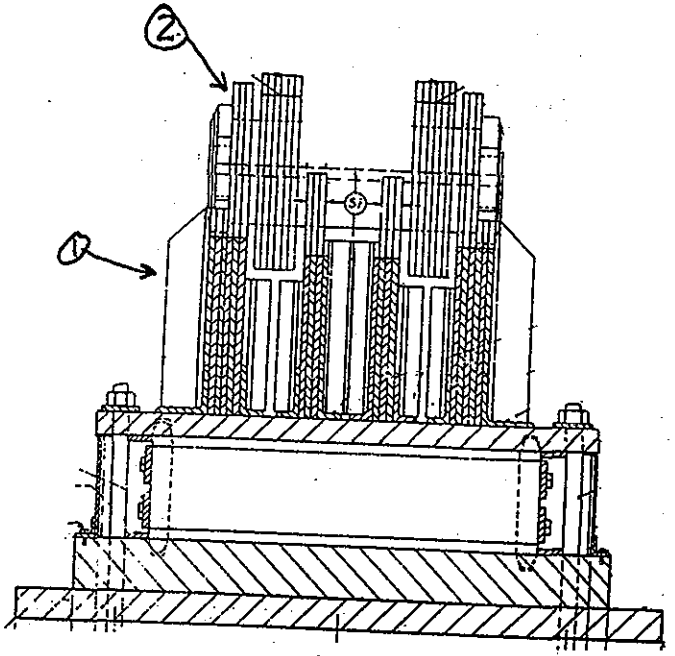

S ELEV.

PH B5-18-20

E BEARING

PIER 1 SPAN 1&3

TYP. NOTE: · PIN NUTS ARE SECURE & TIGHT
· ANCHOR BOLT NUTS ARE TIGHT

NOTES:

① BRG. IS SIMILAR IN COND. TO WEST BRG. SAME COND'S ②, ③, ④ & ⑤

② STYROFOAM PARTIALLY MISSING ON WEST SIDE BTWN PIN PL & GUSSET PL

③ 50% OF SHEET METAL COVERING OVER BRG. PL IS MISSING. (ENTIRE NORTH SIDE IS MISSING. HALF OF WEST SIDE) REMAINING COVER IS IN POOR CONDITION.

BEARINGS	
DEPARTMENT OF THE ARMY NEW ENGLAND DIVISION CORPS OF ENGINEERS	
BOURNE HIGHWAY BRIDGE ROUTINE INSPECTION	
NOTES BY: LICHTENSTEIN CONSULTING ENGINEERS	
JOB #1784	DATE: 3/19/96
CREW: WM/GG	SHEET 5 OF 11

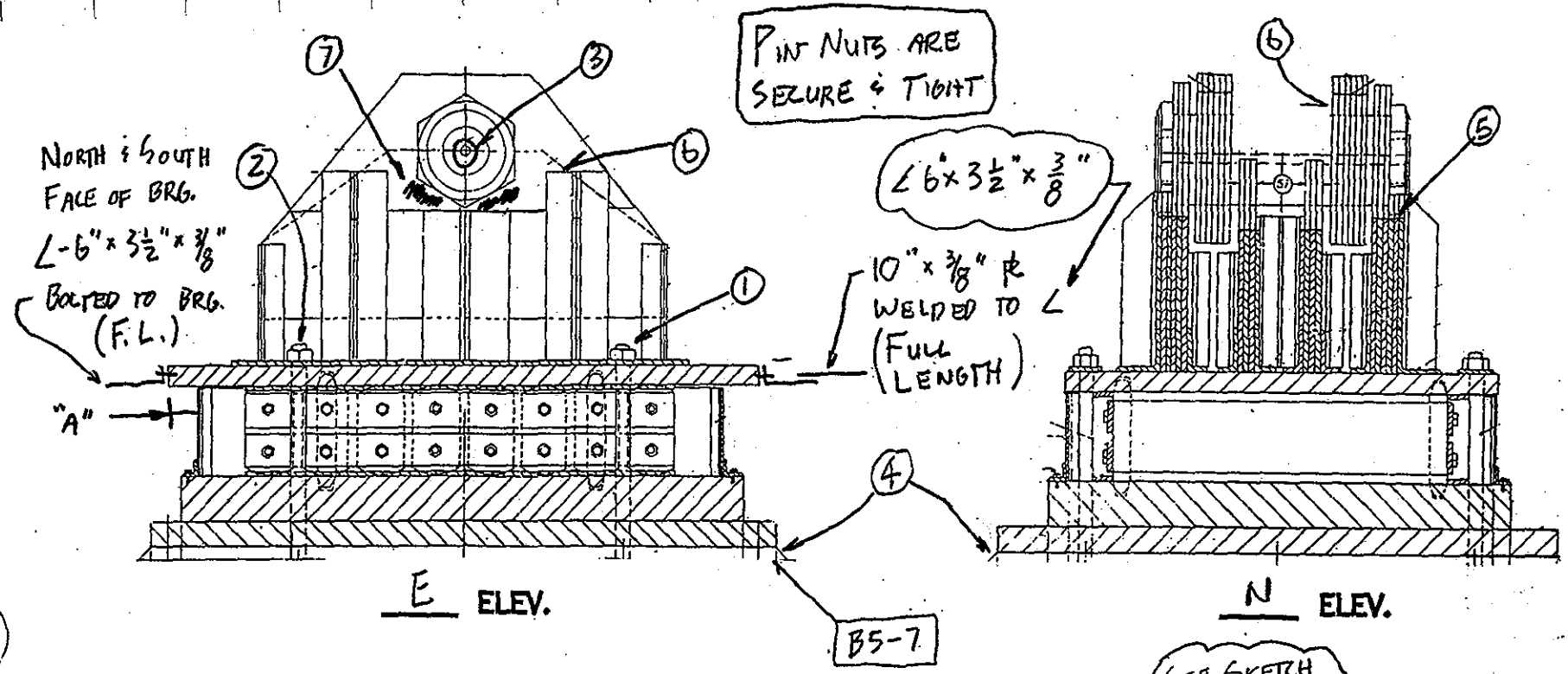

7. W. FACE - 15" OF UP TO 3/8" (IR) BTWN PIN PL & PIN RETAINING PL
1/8" PITTING x 1" ON W. FACE

SEE SKETCH OF EAST BRG.

W BEARING

REVISED: 3/27/96 WM. JB

NE: 2 - SECONDARY BOLT LOOSE
NW: 2 - SEC. BOLT LOOSE
SE: 2 - SEC. BOLT LOOSE
SW: 2 - SEC. BOLT LOOSE
1 - ANCHOR BOLT NUT

SIGNS OF MOVEMENT NOTED

PIER 2 SPAN 1 & 2

NOTES:

1. 2 OF 3 ANCHOR BOLT NUTS LOOSE N E CORNER
2. 2 OF 3 " " " - S W CORNER
3. APPROX. 10 % LOSS ON PIN RETAINING NUT - EAST SIDE 2 3/4" ϕ NUT.
4. WATER & ICE ON TOP OF PIER SURROUNDING BASE OF BRG.
5. 3/8" (IR) BTWN VERT. ANGLE FILL PL'S & EXT. PIN RETAINING PL'S (S.W. CRN.)
6. UP TO 1/8" LOSS x 6" LONG ON PIN PL. WEST PL. - EAST ELEV.

"A": NE: 1 1/8" SE: 1 1/2"
NW: 1 1/8" SW: 1 1/2"

BEARINGS

DEPARTMENT OF THE ARMY
NEW ENGLAND DIVISION CORPS OF ENGINEERS
BOURNE HIGHWAY BRIDGE
ROUTINE INSPECTION
NOTES BY: LICHTENSTEIN CONSULTING ENGINEERS
JOB #1784 DATE: 3/12/96
CREW: WM/SD SHEET 2 OF 5

131/219

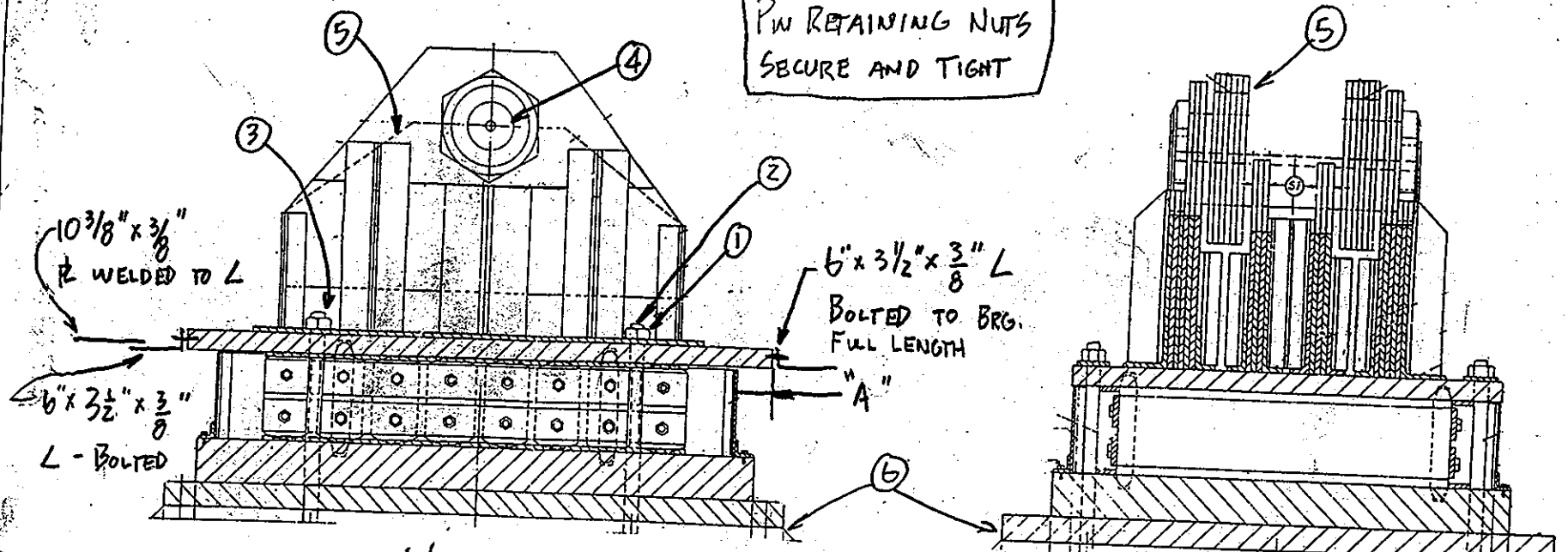

132
219

NOTE: THREE ANCHOR BOLTS @ EACH CORNER

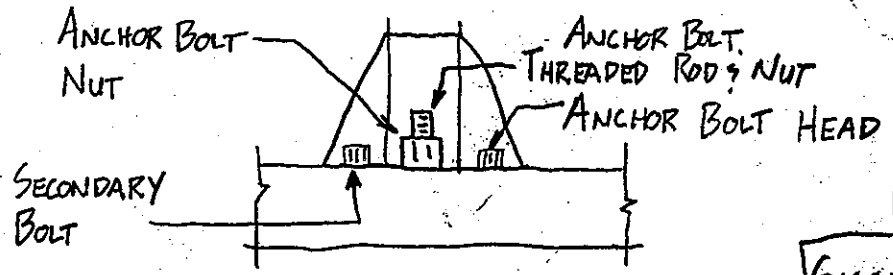

TYP. ANCHOR BOLT CONFIGURATION EAST & WEST BRG.

SW: 1 - SECONDARY BOLTS LOOSE
SE: 2 - SECONDARY BOLTS LOOSE
NW: 2 - SECONDARY BOLTS LOOSE
NE: 2 - SECONDARY BOLTS LOOSE
1 - ANCHOR BOLT NUT LOOSE

REVISED 3/28/96 WM, JB

SIGNS OF MOVEMENT NOTED

E BEARING

PIER 2 SPAN 1 & 2

NOTES:

1. 1 OF 3 ANCHOR BOLT NUTS LOOSE S.W. CORNER (OUTSIDE RETAINING FAST.)
2. 2 OF 3 " " " S.E. CORNER (2 OUTSIDE RETAINING FAST.)
3. 3 OF 3 " " " N.E CORNER
4. APPROX 20% LOSS ON PIN RETAINING NUT - WEST SIDE, EAST SIDE OK
5. UP TO 1/8" LOSS x 12" LONG ON PIN PL EAST PL, EAST ELEV.
6. WATER & ICE ON TOP OF PIER SURROUNDING BASE BRG.

"A": NE: 3/4" NW: 15/16"
SE: 1 5/8" SW: 1 5/8"

BEARINGS

DEPARTMENT OF THE ARMY
NEW ENGLAND DIVISION CORPS OF ENGINEERS

BOURNE HIGHWAY BRIDGE
ROUTINE INSPECTION

NOTES BY: LICHTENSTEIN
CONSULTING ENGINEERS

JOB #1784 DATE: 3/12/96
CREW: WM/SD SHEET 1 OF 5

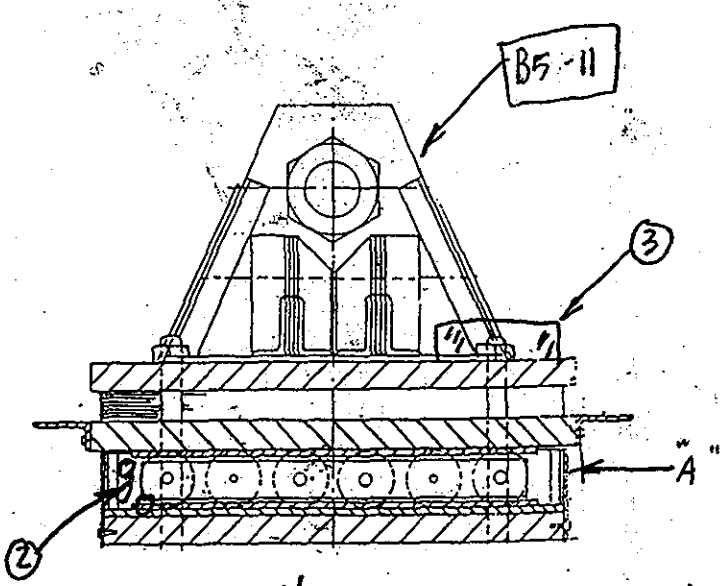

W ELEV.

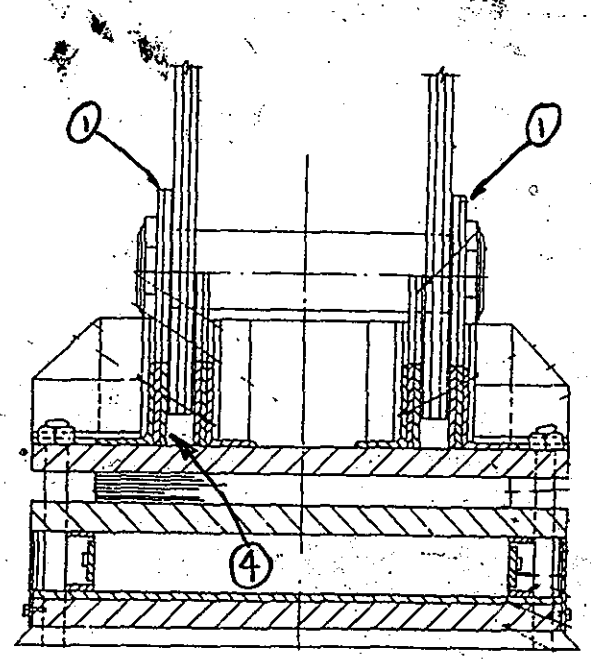

N ELEV.

133
219

(5) - LT-MED RUST INSIDE PIN CAVITY
STYROFOAM MISSING ON SOUTH SIDE OF BRG.

Typ Notes:

- SIGNS OF MOVEMENT
- PIN NUTS ARE SECURE AND TIGHT
- LT. RUST ON 10% OF BRG. SURFACE
- BRG. COVERED WITH ICE & WATER

W BEARING

PIER 4 SPAN 2

NOTES:

(1) FLAME CUT GUSSET PL'S
(2) 10 OF 21 BOLTS LOOSE ON ROLLER BRG. BOX COVER PL - WEST ELEV.
17 OF 21 " " " " " - EAST ELEV.
2 OF 21 MISSING BOLTS " " " " - EAST ELEV.
(3) ANCHOR BOLT COVER BOXES GENERALLY IN FAIR CONDITION
(4) MINOR SECTION LOSS EAST PIN PL - EAST ELEV.
"A": NE: 15/16" NW: 1"
SE: 1 1/8" SW: 1"

BEARINGS

DEPARTMENT OF THE ARMY
NEW ENGLAND DIVISION CORPS OF ENGINEERS

BOURNE HIGHWAY BRIDGE
ROUTINE INSPECTION

NOTES BY: LICHTENSTEIN
CONSULTING ENGINEERS

JOB #1784 | DATE: 3/12/96
CREW: WM / SD | SHEET 4 OF 5

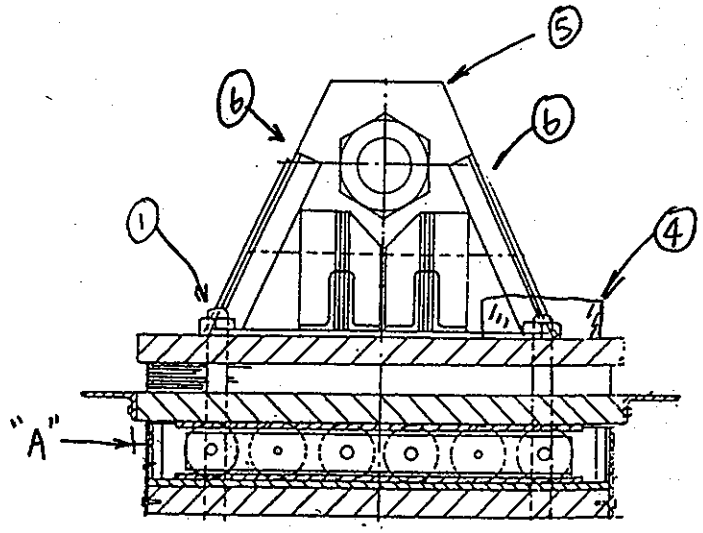

E ELEV.

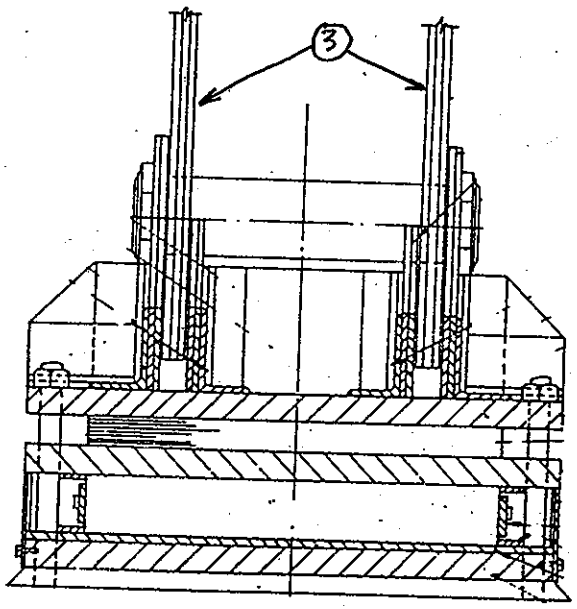

N ELEV.

134
219

Typ.
Note:

- BRG. IS ICE COVERED & WATER SOAKED
- LT - MED RUST ON 30% OF BRG.
- BRG. SHOWS SIGNS OF MOVEMENT
- PIN NUTS ARE SEIZURE & TIGHT

E BEARING

PIER 4 SPAN 2

NOTES:

1. 3 OF 21 BOLTS LOOSE ON ROLLER BRG COVER BOX - EAST ELEV.
2. 8 OF 21 " " " " " - WEST ELEV.
3. FLAME CUT GUSSET PL.
4. ANCHOR BOLT COVER BOXES ON WEST SIDE HAVE HVY. RUST & S.W. COVER HOLED THRU
5. UP TO 5/16" (IR) BTWN. PIN RETAINING PL & GUSSET PL.
6. PIN CAVITY PARTIALLY FILLED W/ ICE & DEBRIS

A : NE : 1" NW : 15/16"
SE : 1/2" S.W. : 1/2"

T = 35 °F

BEARINGS

DEPARTMENT OF THE ARMY
NEW ENGLAND DIVISION CORPS OF ENGINEERS

BOURNE HIGHWAY BRIDGE
ROUTINE INSPECTION

NOTES BY: LICHTENSTEIN
CONSULTING ENGINEERS

JOB #1784	DATE: 3/12/96
CREW: WM/SD	SHEET 5 OF 5

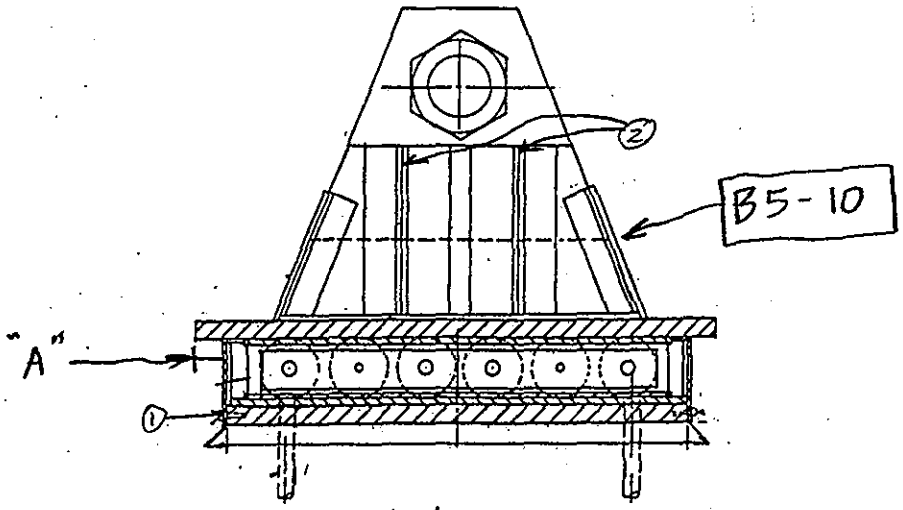

W ELEV.

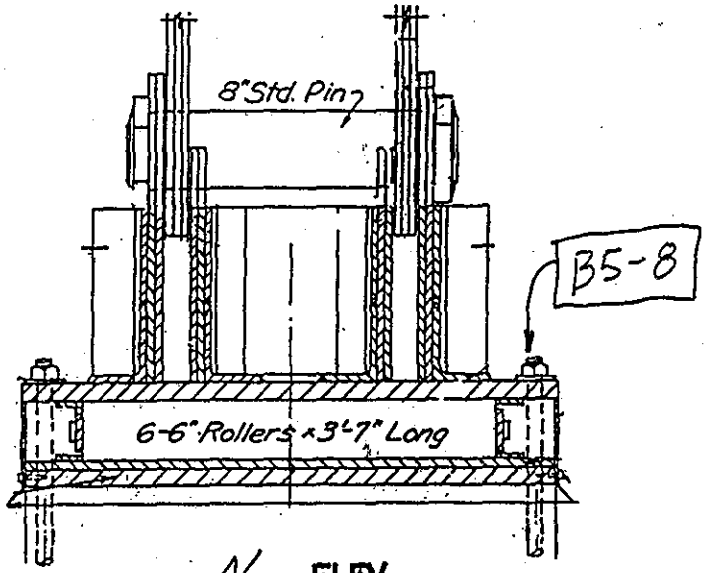

N ELEV.

135
219

JRB 3/12/96
GG

W BEARING

PIER 4 SPAN 4

NOTES: ① 4 of 21 Loose Bolts on Roller Brg. Box Cover Plate - west elev.
6 of 21 Loose " " " " " " " - east elev.
② Impact rust between outstanding angle legs (East & West.)
overall, Bearing is in fair condition w/ light to moderate rust over 10% of its surface.

SW - 1½"
NW - 3¾"
SE - 1½"
NE - 3¾"

During Inspection, Bearing showed signs "A" of movement.

BEARINGS	
DEPARTMENT OF THE ARMY NEW ENGLAND DIVISION CORPS OF ENGINEERS	
BOURNE HIGHWAY BRIDGE ROUTINE INSPECTION	
NOTES BY: LICHTENSTEIN CONSULTING ENGINEERS	
JOB #1784	DATE: 3/12/96
CREW: JB/GG	SHEET 5 OF 5

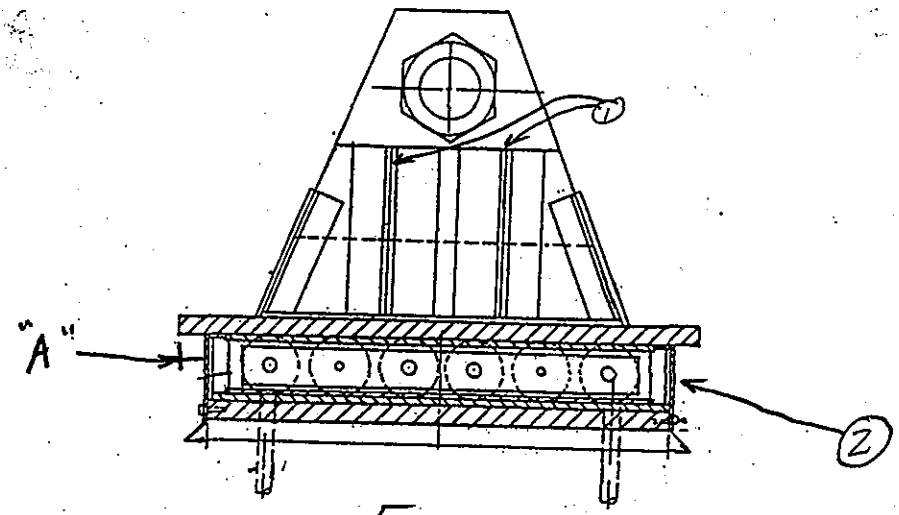

E ELEV.

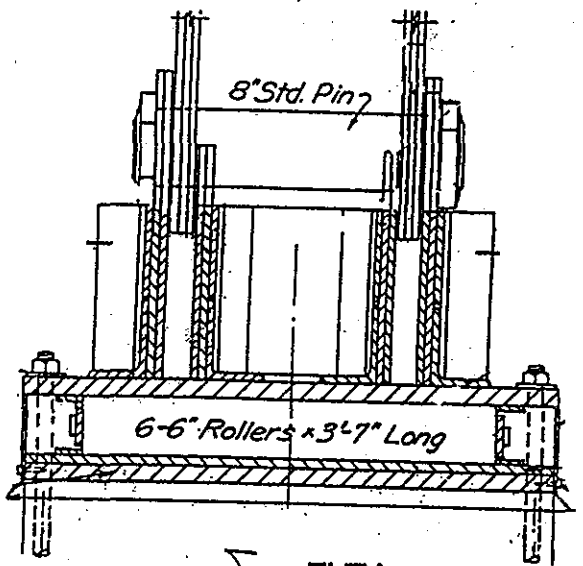

S ELEV.

136
219

PHOTO 85-9 (JAB) – View of East Bearings, west Elev. showing general conditions. (Light to moderate Rust, Wet surface)

E BEARING

PIER 4 SPAN 4

NOTES: ① Impact rust between outstanding angle legs (East & Rust) Overall, Bearing is in fair condition w/ light to moderate rust over 20% of the surface area. (Similar to W Bearing)

BEARING MEASUREMENTS – "A"

SW – 1 1/4"
SE – 1 1/4"
NW – 3 7/8"
NE – 3 7/8"

② 10 out of 19 (LB), 1 – (MB) : W. FACE Cov PL
6 out of 19 (LB) : E. FACE Cov. PL

BEARINGS	
DEPARTMENT OF THE ARMY NEW ENGLAND DIVISION CORPS OF ENGINEERS	
BOURNE HIGHWAY BRIDGE ROUTINE INSPECTION	
NOTES BY: LICHTENSTEIN CONSULTING ENGINEERS	
JOB #1784	DATE: 3/12/96
CREW: JB/GG	SHEET 4 OF 5

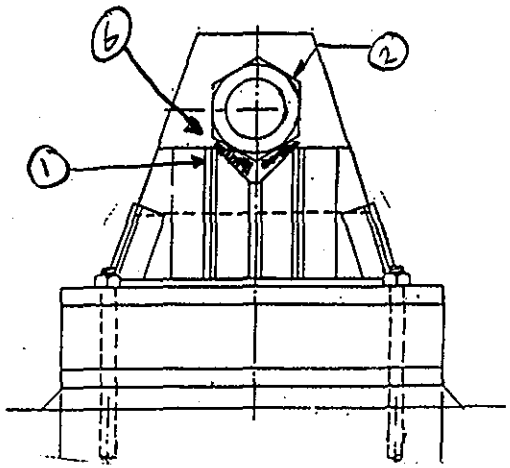

West ELEV.

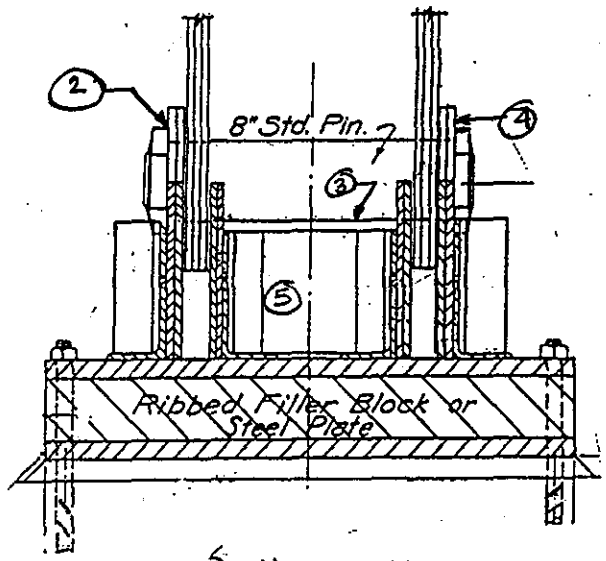

South ELEV.

137
219

West BEARING

PIER 6 SPAN 4

NOTES: A Anchor Bolts-Tight

1. Up to 1/2" IR East Elev btwn B-B ∠'s
   " " 1/4" IR West Elev. " " "
2. 1/4" Gap Btwn Pin Nut & Pin Pl @ Bott. of Nut
   1/8" " " " " @ Top of Nut
3. 1/16" Loss Full Length of Pin
4. Up to 1/8" Pitting x 4" Long ON PIN PL - TOP OF PIN
5. No Styrofoam in Pin Cavity S. Elev., Med-Hvy Rust @ Bott. of Pin Cavity 6 up to 1/4" IR Btwn Pin Nut & Pin Nut Pl, E & W Faces

BEARINGS	
DEPARTMENT OF THE ARMY NEW ENGLAND DIVISION CORPS OF ENGINEERS	
BOURNE HIGHWAY BRIDGE ROUTINE INSPECTION	
NOTES BY: LICHTENSTEIN CONSULTING ENGINEERS	
JOB #1784	DATE: 3/11/96
CREW: SD, WM	SHEET 6 OF 8

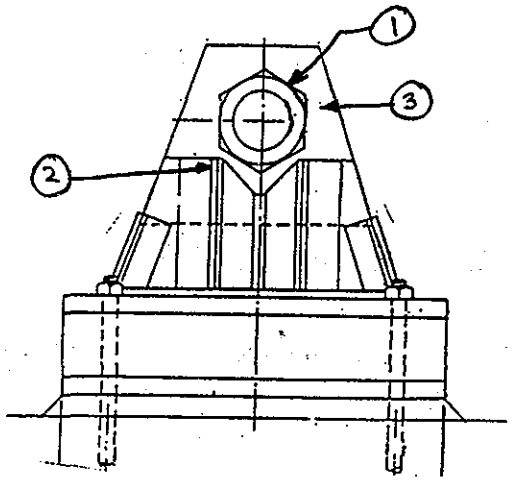

East ELEV.

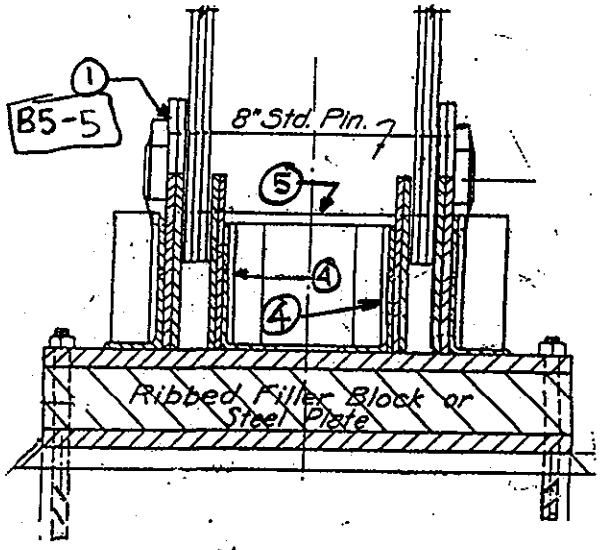

North ELEV.

138
219

East BEARING

PIER 6 SPAN 4

NOTES:

1. 3/8" Gap Between Pin Nut & Pin Pl
2. Up to 1/4" IR East Elev. btwn. B-B ∠'s
   Up to 9/16" IR West Elev. btwn. B-B ∠'s
3. 1/8" Pitting East & West Elev.
4. 1/8" Pitting East Elev. & 1/16" Pitting on West Elev.
5. 1/16" Loss Full Length of Pin - Bottom of Pin

BEARINGS	
DEPARTMENT OF THE ARMY NEW ENGLAND DIVISION CORPS OF ENGINEERS	
BOURNE HIGHWAY BRIDGE ROUTINE INSPECTION	
NOTES BY: LICHTENSTEIN CONSULTING ENGINEERS	
JOB #1784	DATE: 3/11/96
CREW: SO, WM	SHEET 7 OF 8

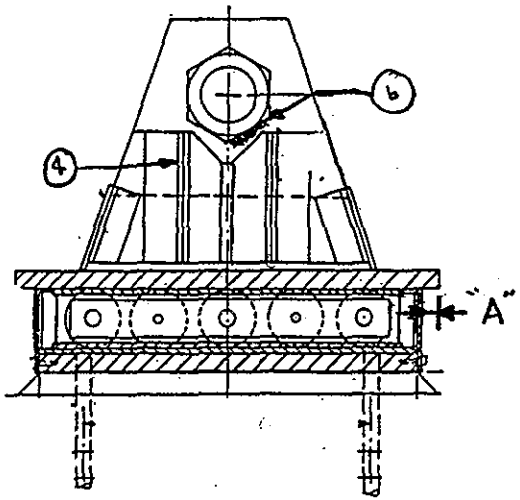

West ELEV.

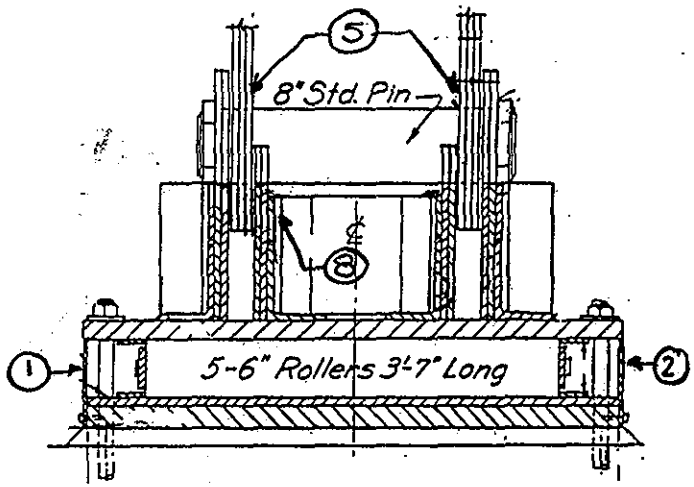

North ELEV.

(7) Ice on N. Elev. of Brg.

(8) Up to 3/16" Pitting South West Interior Pin PL
(Pitting Typ. All 4 Corners)

(9) Pin Nuts Tight

West BEARING

PIER 6 SPAN 6

NOTES: Signs of Movement Noted

(1) 13 of 18 Bolts loose on ~~Brg. Roller Box~~ COVER PL EAST ELEV.

(2) 10 of 18 Bolts loose on ~~Brg. Roller Box~~ COVER PL WEST ELEV.

(3) Anchor Bolt Cover Boxes Tight & Secure

(4) East & West Elev. up to 3/8" IR BTWN EXT. ANGLES

(5) East & West Elev. Up to 1/4" Pitting x 2" Long Above Pin.

(6) Upto 1/4" Gap Bottom Half of Nut

"A" = N. West - 7/8" N. East = 5/8"

S. West - 1 7/8" S. East = 1 7/8"

BEARINGS	
DEPARTMENT OF THE ARMY NEW ENGLAND DIVISION CORPS OF ENGINEERS	
BOURNE HIGHWAY BRIDGE ROUTINE INSPECTION	
NOTES BY: LICHTENSTEIN CONSULTING ENGINEERS	
JOB #1784	DATE: 3/11/96
CREW: SD, WM	SHEET 4 OF 8

219 139

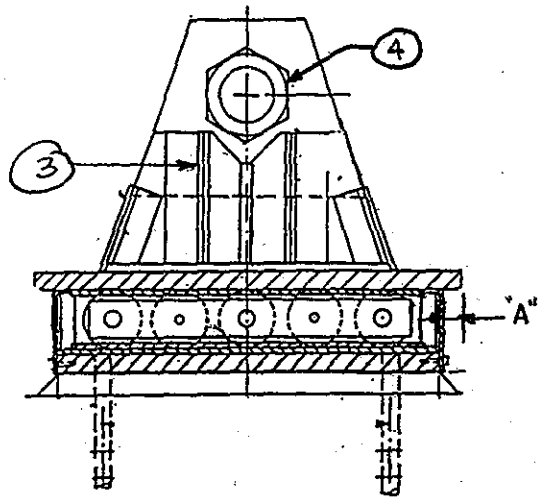

East ELEV.

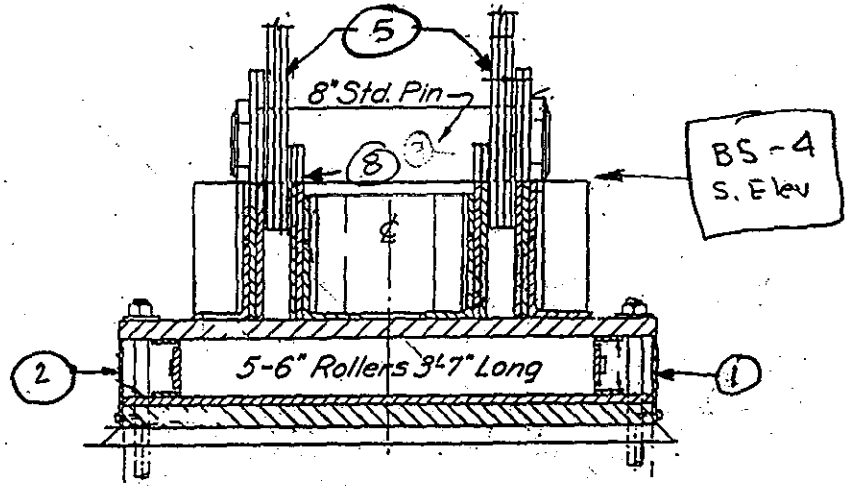

North ELEV.

(6) Anchor Bolt Covers Are Closed & Tight

(7) Ice & Debris In Pin Cavity (90% Styrofoam missing)

(8) Heavy Rust w/ Advanced Section Loss Under Pin. (Up to 1/16")

East BEARING

PIER 6 SPAN 6

NOTES: Signs of Movement Noted

(1) 10 of 18 Bolts loose on Brg. Box Cover PL on West Elev.

(2) 10 of 18 Bolts loose on Brg Box Cover PL on East Elev.

(3) up to 1/4" IR on East Elev. BTWN EXT ANGLES

up to 1/2" IR on West Elev. " " "

(4) 1/4" Pitting West. Elev. (1"x1") on Pin PL

(5) (Typ) Up to 3/16" Pitting All 4 Corners

"A" = N. West = 13/16" N. East = 3/4"

S. West = 1 7/8" S. East = 1 7/8"

BEARINGS	
DEPARTMENT OF THE ARMY NEW ENGLAND DIVISION CORPS OF ENGINEERS	
BOURNE HIGHWAY BRIDGE ROUTINE INSPECTION	
NOTES BY: LICHTENSTEIN CONSULTING ENGINEERS	
JOB #1784	DATE: 3/11/96
CREW: SD, WM	SHEET 5 OF 8

1140 219

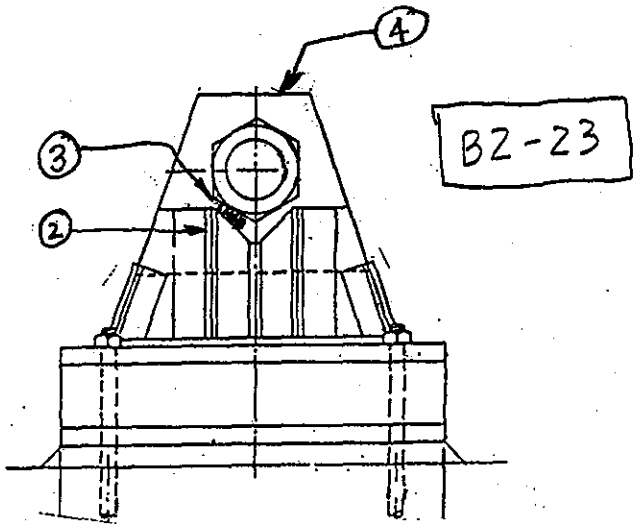

East ELEV.

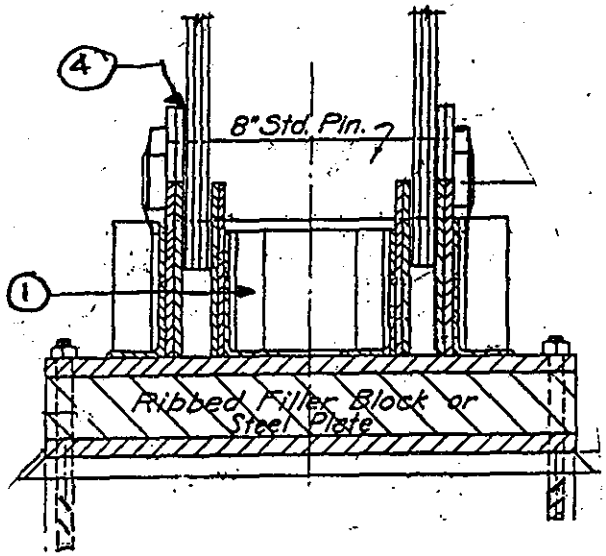

South ELEV.

141
219

West BEARING

PIER N. Abut SPAN 6

4 Anchor Bolts Tight

NOTES:

1. Ice And Debris Filled. 1/3 Styrofoam Missing. S. Elev.
2. East Elev. up to 3/8" IR BETWEEN EXT. ANGLES
   West Elev up to 1/4" IR " " "
3. East. Elev. up to 1/16" Pitting ON PIN & BELOW PIN
4. East Elev. 1/4" Pitting x 3" Long ON PIN & ON TOP OF PIN
   West Elev 1/16" Pitting x 5" Long with up to 1/4" IR

Lt. Rust on 20% of Brg Surface

BEARINGS	
DEPARTMENT OF THE ARMY NEW ENGLAND DIVISION CORPS OF ENGINEERS	
BOURNE HIGHWAY BRIDGE ROUTINE INSPECTION	
NOTES BY: LICHTENSTEIN CONSULTING ENGINEERS	
JOB #1784	DATE: 3/11/96
CREW: SD, WM	SHEET 3 OF 8

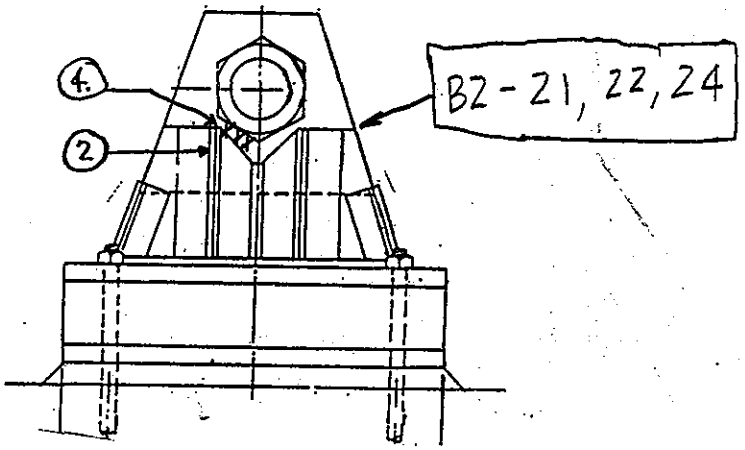

East ELEV.

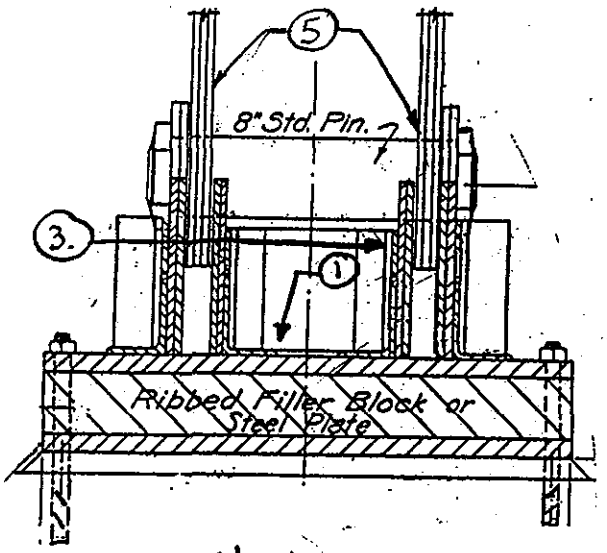

North ELEV.

142
219

EAST BEARING

PIER NAbut. SPAN 6

NOTES: 4-Anchor Bolt Nuts Tight

1. Ice And Debris In Bearing Cavity.
2. East Side Up to 3/8" IR BTWN EXT. ANGLES
   West Side Up to 5/8" IR " " "
3. E. Elev. Interior Pin PL 1/4" Pitting 8" Long x 2" High Below Pin on Pin PL
   Typ on W. Elev. Interior Pin PL
4. West Elev. Up to 1/8" Pitting ON PIN PL BELOW PIN
   LT. Rust on 25% of Brg.
5. W. Elev. up to 3/8" Pitting 12" Long, East Elev. up to 1/4" Pitting 12" Long

BEARINGS	
DEPARTMENT OF THE ARMY NEW ENGLAND DIVISION CORPS OF ENGINEERS	
BOURNE HIGHWAY BRIDGE ROUTINE INSPECTION	
NOTES BY: LICHTENSTEIN CONSULTING ENGINEERS	
JOB #1784	DATE: 3/11/96
CREW: SD, WM	SHEET 2 OF 8

IV. SUBSTRUCTURE

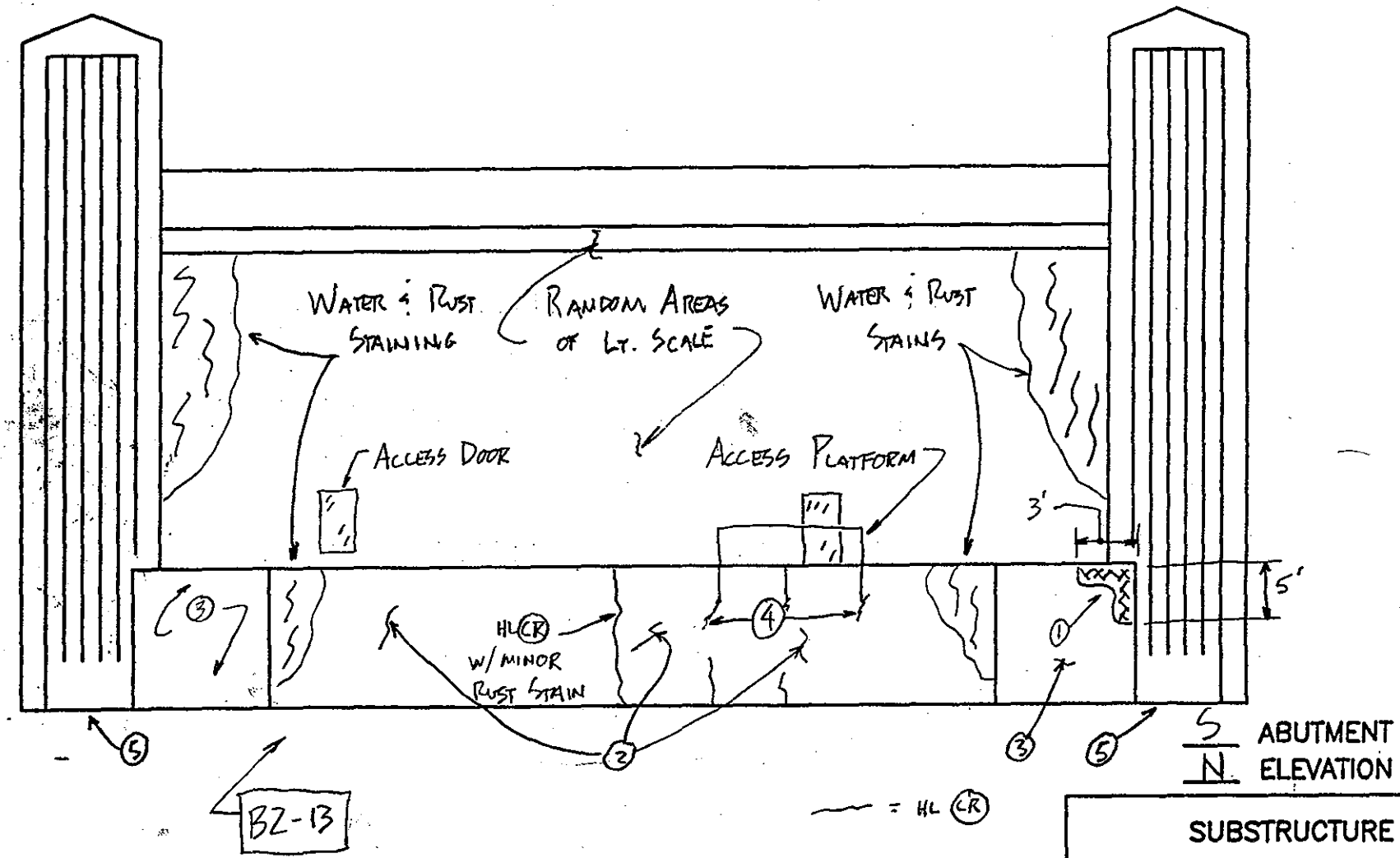

NOTES:

1. 3" DP x 8" W SPALL
2. AREAS OF LT. SCALE
3. LT-MED SCALE ON 50% OF SURFACE AREA
4. MINOR RUST STAINING UNDER PLATFORM BRACKETS
5. SM. AREAS OF HONEYCOMBING UP TO 3' L x 3" W x 1" DP

SUBSTRUCTURE	
DEPARTMENT OF THE ARMY NEW ENGLAND DIVISION CORPS OF ENGINEERS	
BOURNE HIGHWAY BRIDGE ROUTINE INSPECTION	
NOTES BY: LICHTENSTEIN CONSULTING ENGINEERS	
JOB #1784	DATE: 3/22/96
CREW: WM/GG	SHEET 1 OF 1

143
219

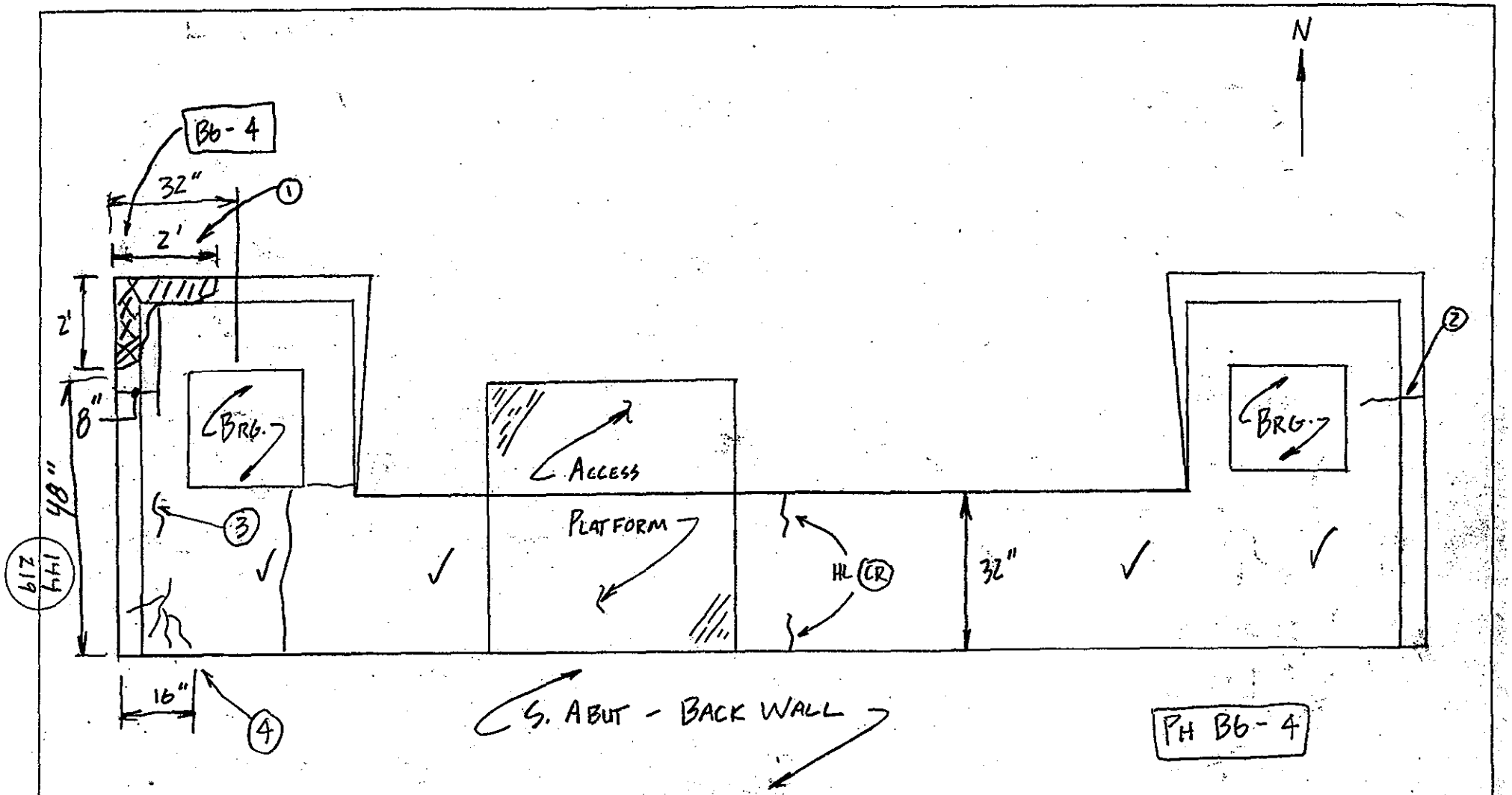

NOTES:

1. SPALL ON N.W CORNER 24" x 24" x 8" W W/ HOLLOW AREA ON NORTH FACE 12" L x 8" SPALL EXTENDS DOWN OVER CORNER TO FRONT OF ABUT.
2. UP TO 1/16" CR - 12" L EXTENDS DOWN OVER FACE OF ABUT.
3. MINOR HL MC AREA 48" L x 32" W
4. MINOR HL MC 16" x 16"

S. ABUT - TOP OF PIER

DEPARTMENT OF THE ARMY
NEW ENGLAND DIVISION CORPS OF ENGINEERS

BOURNE HIGHWAY BRIDGE
ROUTINE INSPECTION

NOTES BY: LICHTENSTEIN
CONSULTING ENGINEERS

JOB #1784	DATE: 3/19/96
CREW: WH / GG	SHEET 1 OF 11

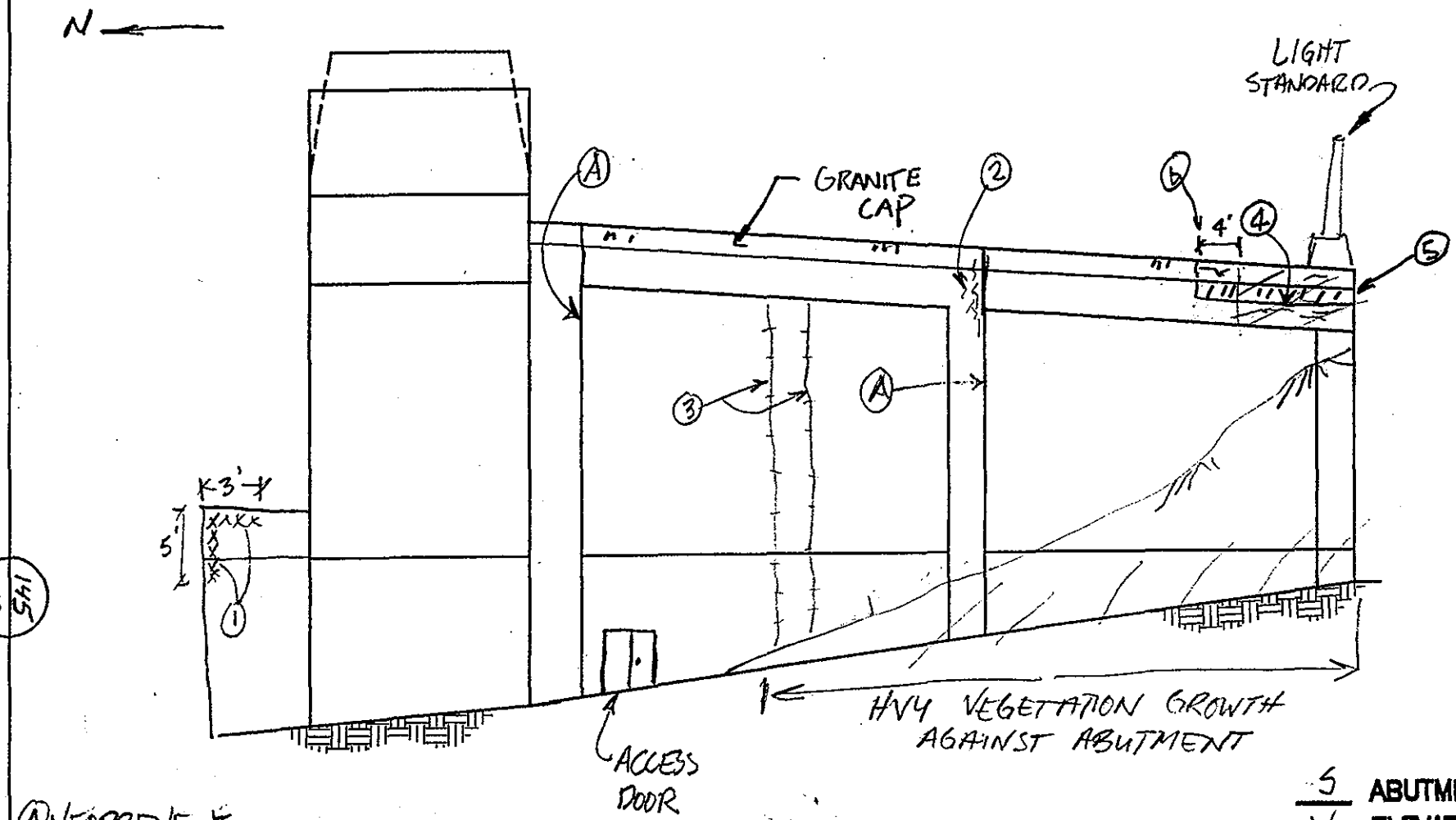

S ABUTMENT
W ELEVATION

NOTES:

1. 3" DP x 8" WIDE SPALL
2. MAPCRACKING w/ EFFLO
3. PATCHED CRACK
4. PATCHED AREA w/ MAPCR & EFFLO
5. HOLLOW AREA 7'L x 1'W
6. HL (MC) AREA 4'L x 1'W ON WEST EL. OF WEST PARAPET WALL - BENEATH GRANITE TOP

3/22/96 WM, GG

SUBSTRUCTURE	
DEPARTMENT OF THE ARMY NEW ENGLAND DIVISION CORPS OF ENGINEERS	
BOURNE HIGHWAY BRIDGE ROUTINE INSPECTION	
NOTES BY: LICHTENSTEIN CONSULTING ENGINEERS	
JOB #1784	DATE: 3-7-96
CREW: EL WM	SHEET 2 OF 7

219
145

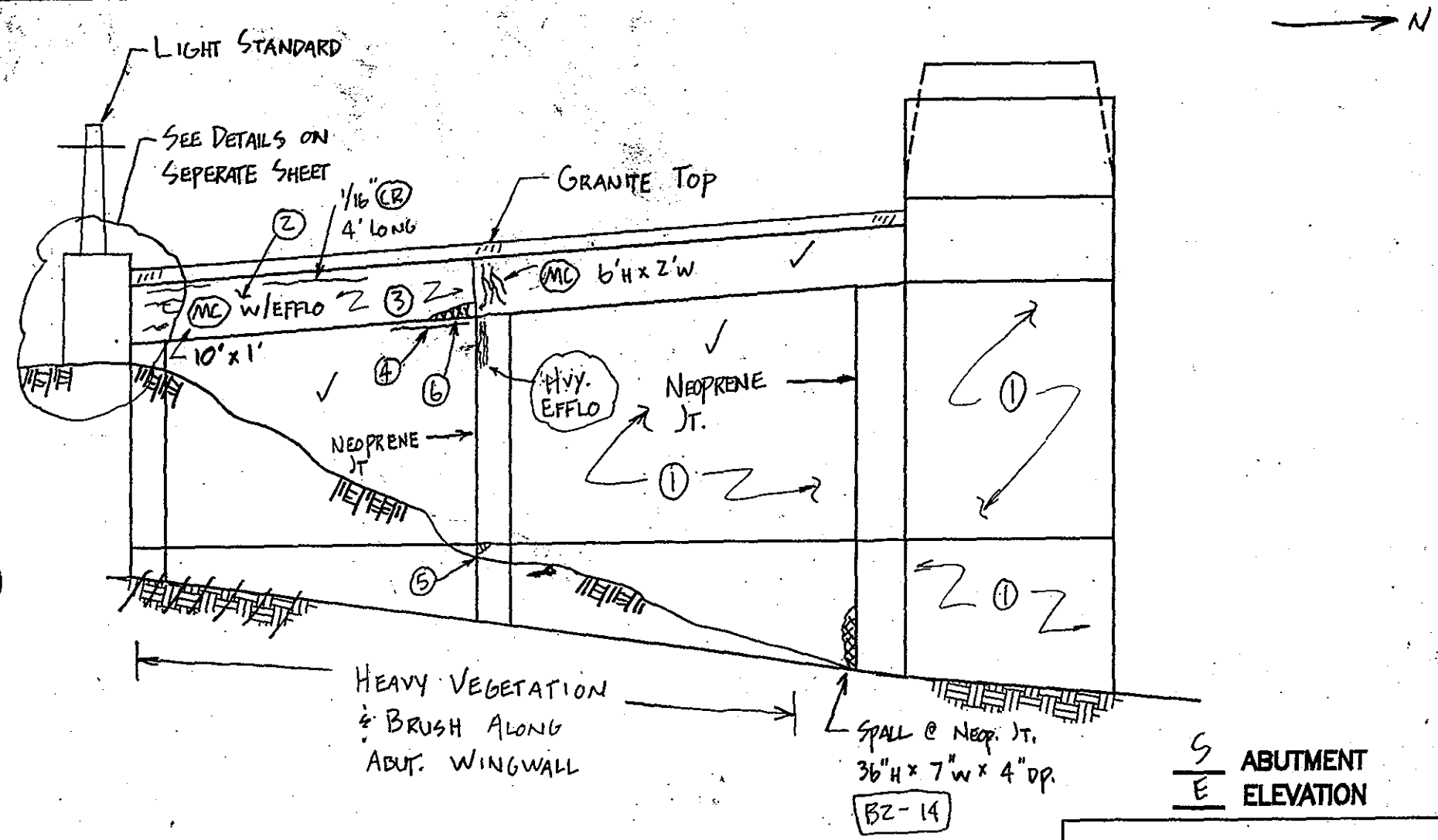

1446
219

NOTES:

(1) LT. SCALE ON 50% OF SURFACE AREA - TYP.
(2) (MC) W/EFFLO & HOLLOW AREA - 8' LONG x 30" H W/ 1/16" (CR) 4' LONG
(3) MED SCALE ON 10% OF SURFACE AREA
(4) UP TO 1/4" (CR) x 8' LONG W/EFFLO ON BOTTOM OF PARAPET WALL BZ-15
(5) 4" x 4" CORNER SPALL
(6) 12"L x 6"W CORNER SPALL - PREVIOUSLY PATCHED SOME PATCH MAT'L REMAINS BZ-16

SUBSTRUCTURE

DEPARTMENT OF THE ARMY
NEW ENGLAND DIVISION CORPS OF ENGINEERS

BOURNE HIGHWAY BRIDGE
ROUTINE INSPECTION

NOTES BY: LICHTENSTEIN CONSULTING ENGINEERS

JOB #1784	DATE: 3/7/96
CREW: WM, EL	SHEET 1 OF 7

FIELD NOTES

	JOB NO. 1784	BRIDGE NO. BOURNE
	DATE 3/7/96	SHEET 6/7
PREPARED BY: A.G. LICHTENSTEIN	CREW WM, EL	

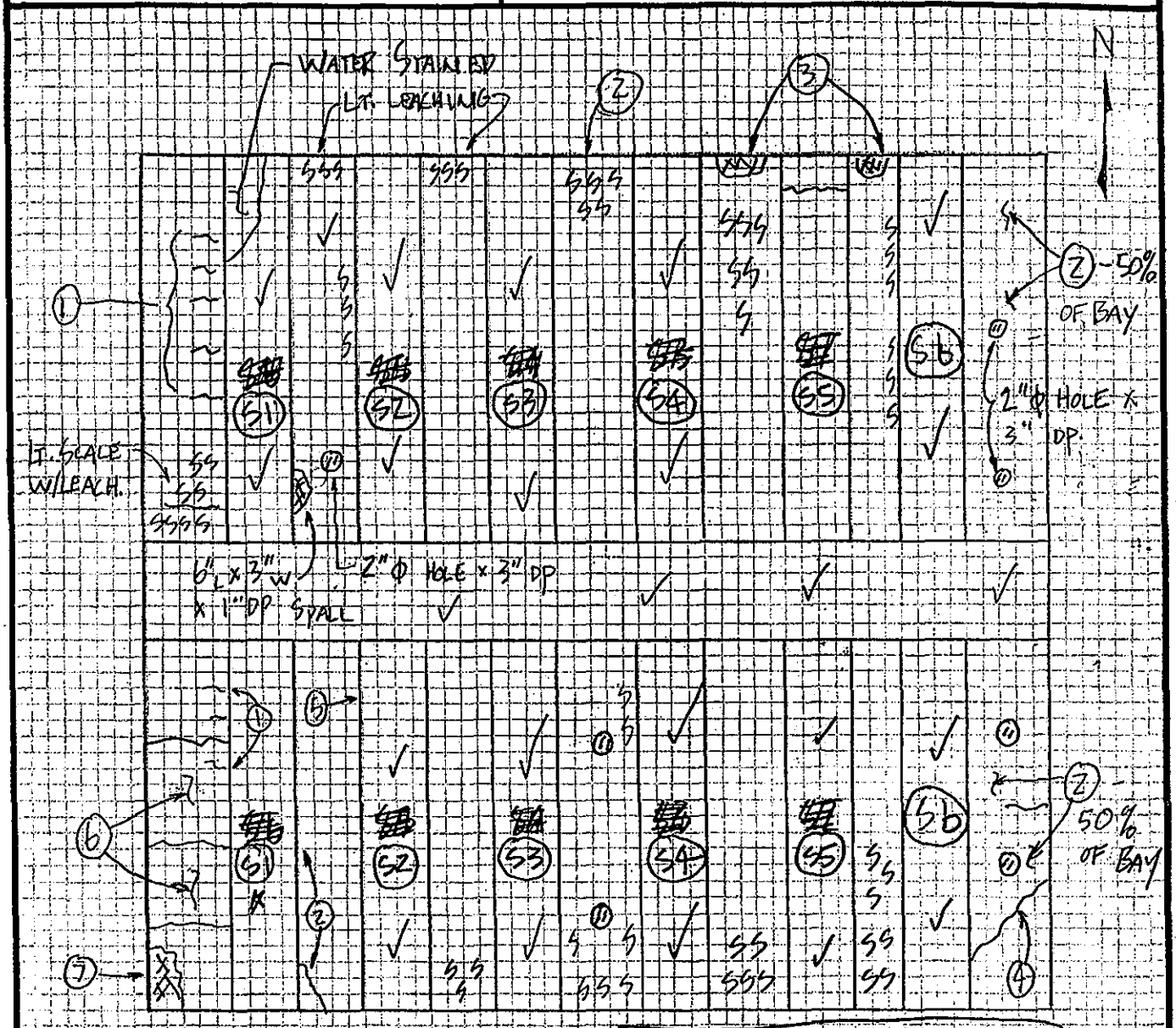

1. HL CR w/ Rust Staining
2. Lt. Scale w/ Leaching
3. Spall 18"L x 12"W x 2" DP
4. HL CR w/ Hvy. Efflo
5. Honeycomb Area 6'L x 12"W
6. MC w/ Efflo 75% of Surface Area
7. 30"L x 20"W Hole for Electrical Conduit w/ Exposed Rebar

*See Detail Sheet for S1

Looking Down (Plan View)

South Abut

Chamber 1

Legend

S = HL CR w/ Efflo

S = Scale

⓫ = 2"ϕ Hole x 3" DP

FIELD NOTES

PREPARED BY: A.G. LICHTENSTEIN	JOB NO. 7784 #6	BRIDGE NO. BOURNE
	DATE 3.7.96	SHEET 1 OF 1
	CREW EL, PWN	

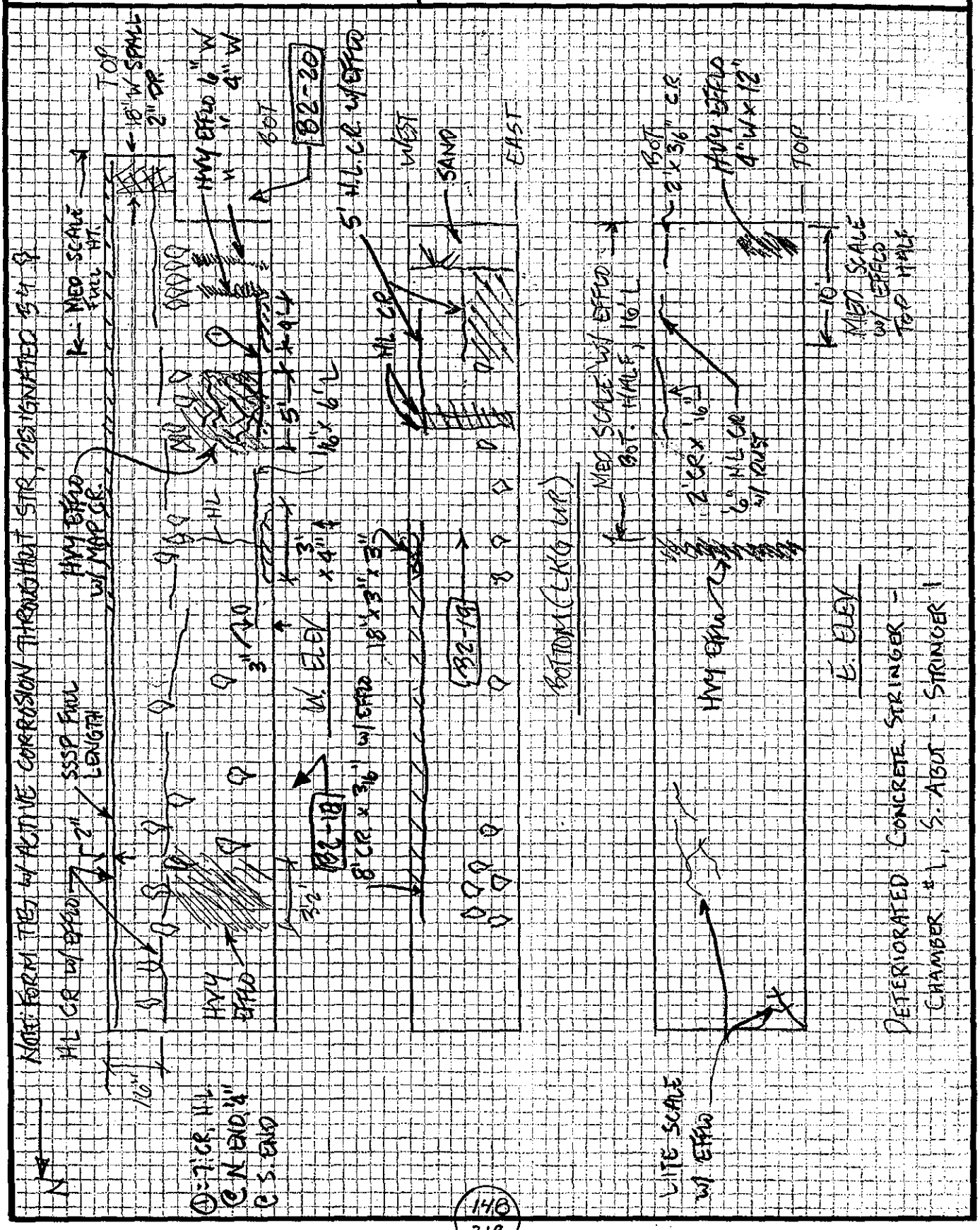

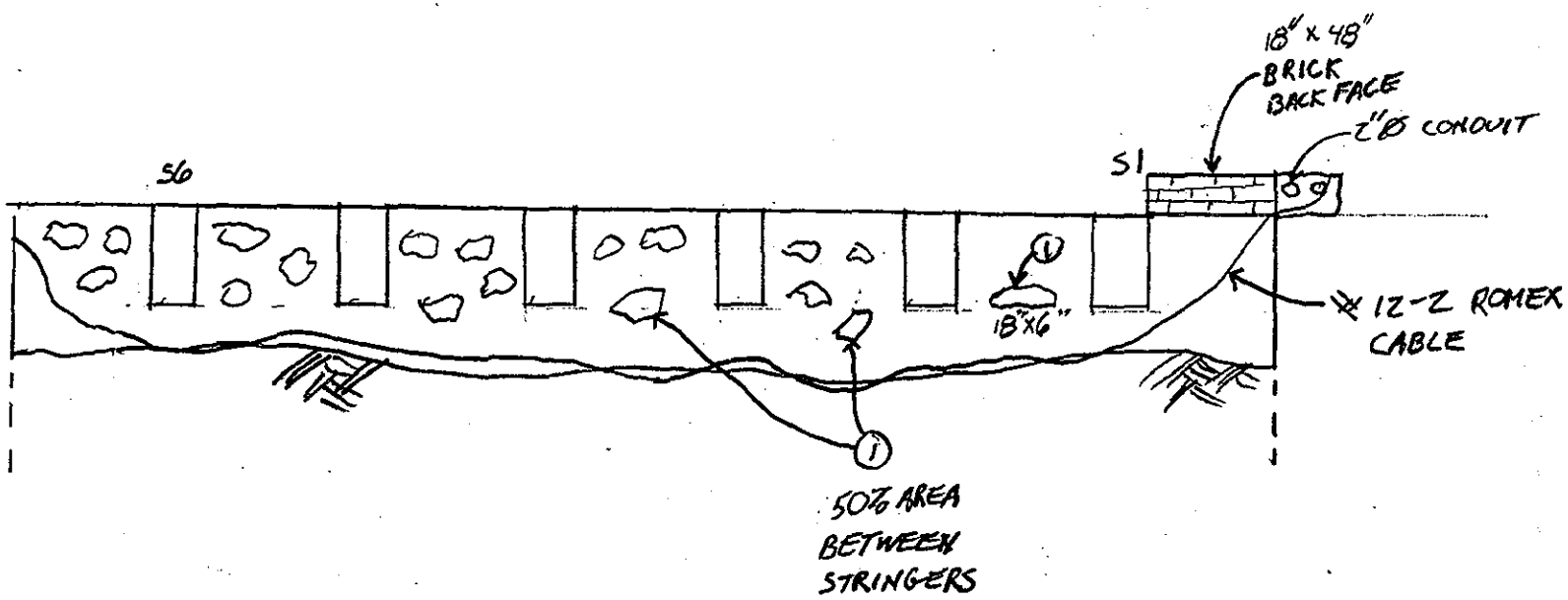

CHAMBER 1
SOUTH BACK WALL
NORTH ELEV.

S ABUTMENT
N ELEVATION

NOTES: (1) ▭ → MED. SCALE PATCHES w/ EFFLO

SUBSTRUCTURE	
DEPARTMENT OF THE ARMY NEW ENGLAND DIVISION CORPS OF ENGINEERS	
BOURNE HIGHWAY BRIDGE ROUTINE INSPECTION	
NOTES BY: LICHTENSTEIN CONSULTING ENGINEERS	
JOB #1784	DATE: 3/7/96
CREW: TF, PWN	SHEET 10 OF 11

FIELD NOTES

JOB NO. 1784	BRIDGE NO. BOURNE
DATE 3/7/96	SHEET 11 OF 11
PREPARED BY: A.G. LICHTENSTEIN	CREW PWN TF

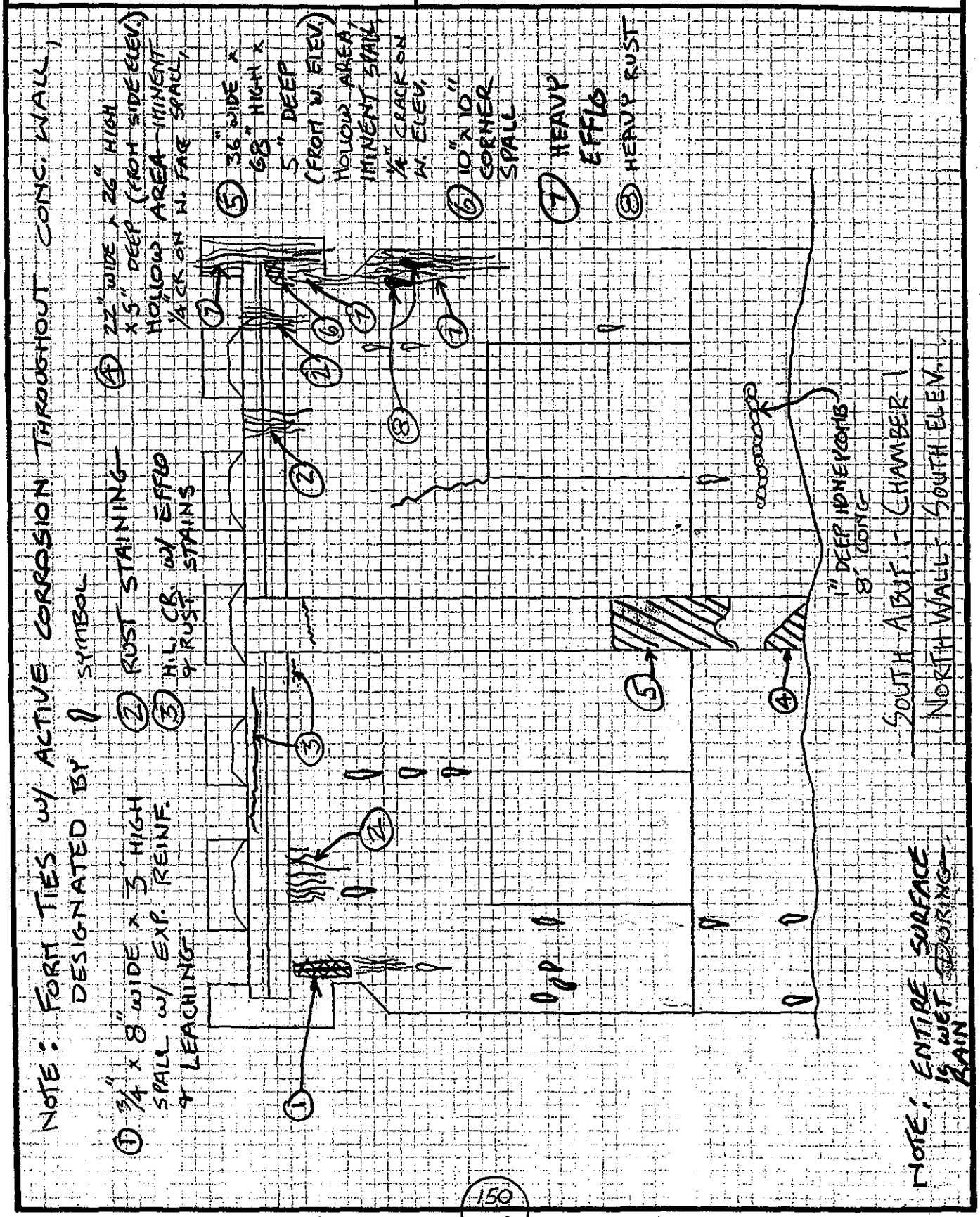

FIELD NOTES

	JOB NO. 1784	BRIDGE NO. BOURNE
	DATE 3/7/86	SHEET 9 of 11
PREPARED BY: A.G. LICHTENSTEIN	CREW TF, PWN	

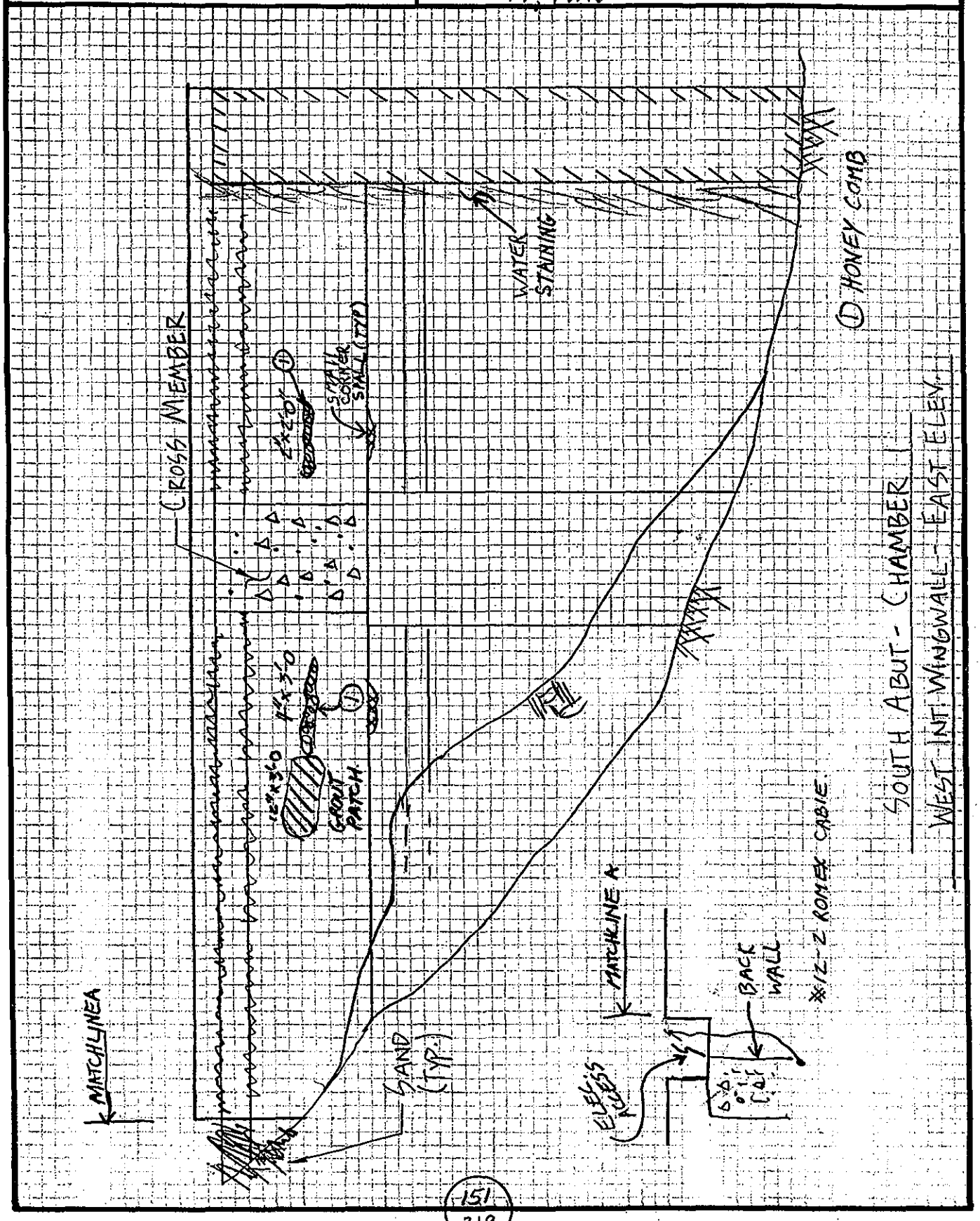

FIELD NOTES

	JOB NO. 1784	BRIDGE NO. BOURNE
	DATE 3.7.96	SHEET 7/7
PREPARED BY: A.G. LICHTENSTEIN	CREW EL, WM	

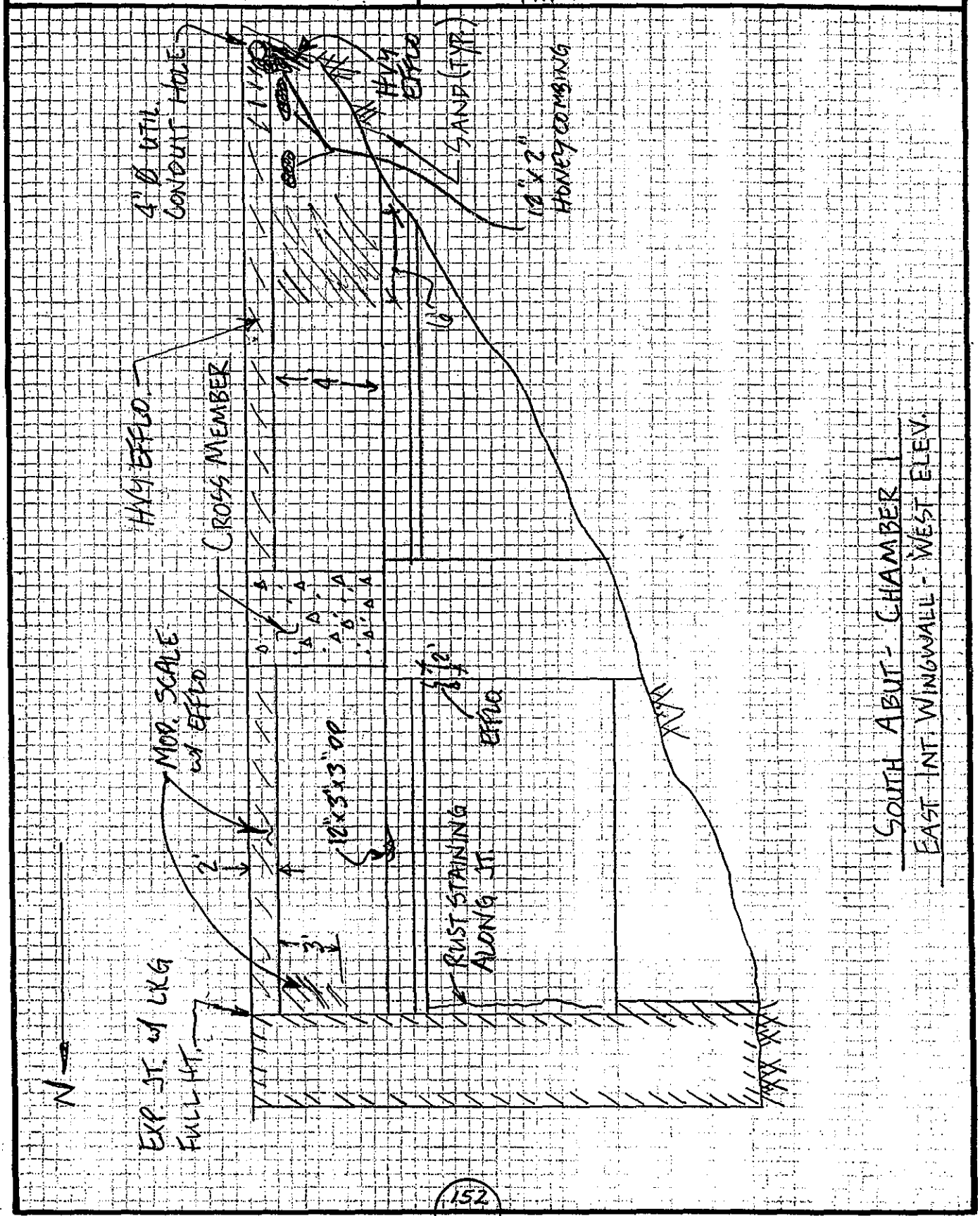

FIELD NOTES

	JOB NO. 1784	BRIDGE NO. BOURNE
	DATE 3/7/96	SHEET 7 OF 11
PREPARED BY: A.G. LICHTENSTEIN	CREW PW N	

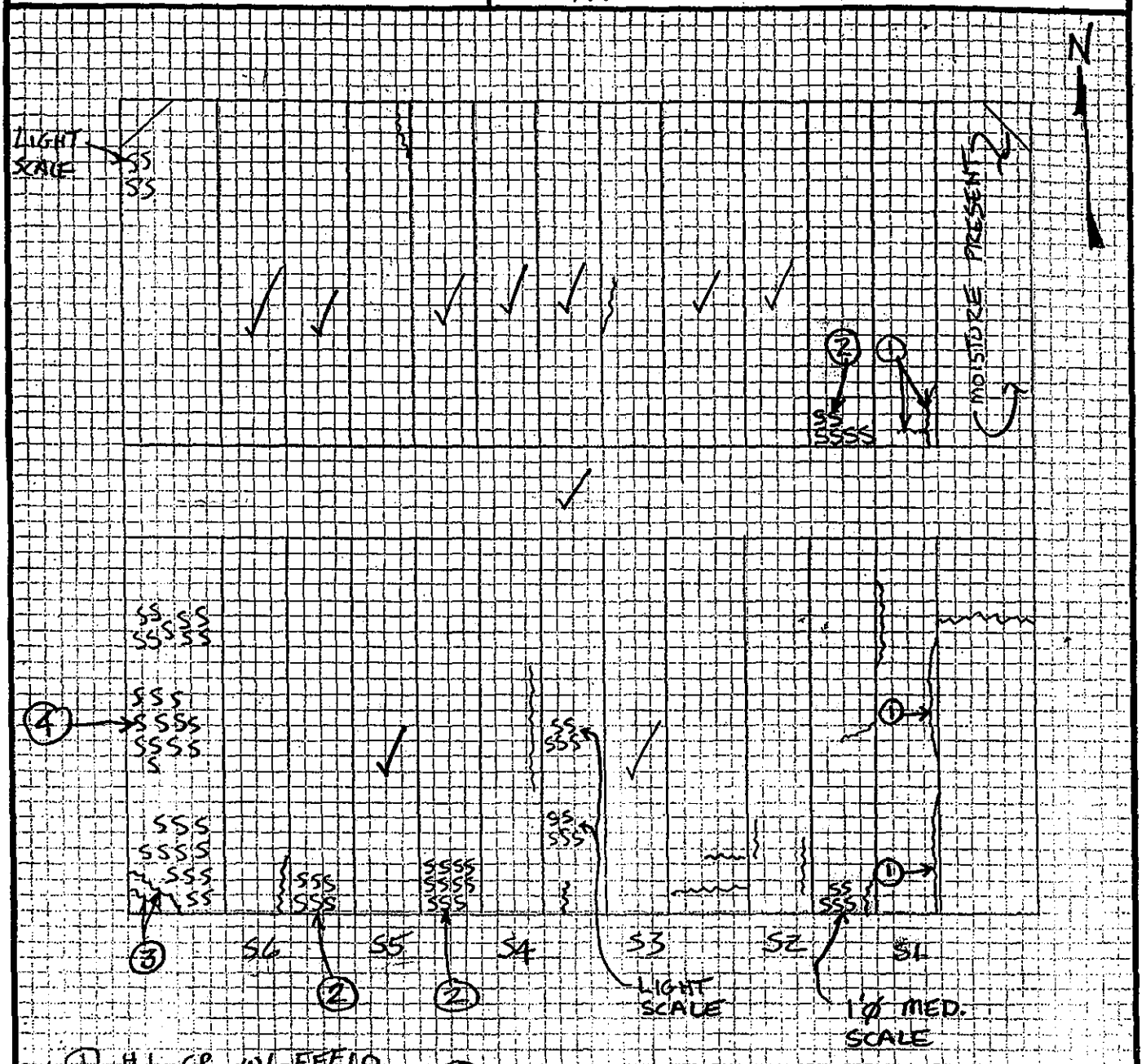

① H.L. CR. w/ EFFLO & RUST STAINING

② MED. SCALE w/ LEACHING

③ H.L. CR w/ HEAVY EFFLO

④ MED. SCALE 50% OF BAY

LEGEND

} H.L. CR w/ EFFLO

S SCALE

N

PLAN VIEW

SOUTH ABUT. - CHAMBER Z

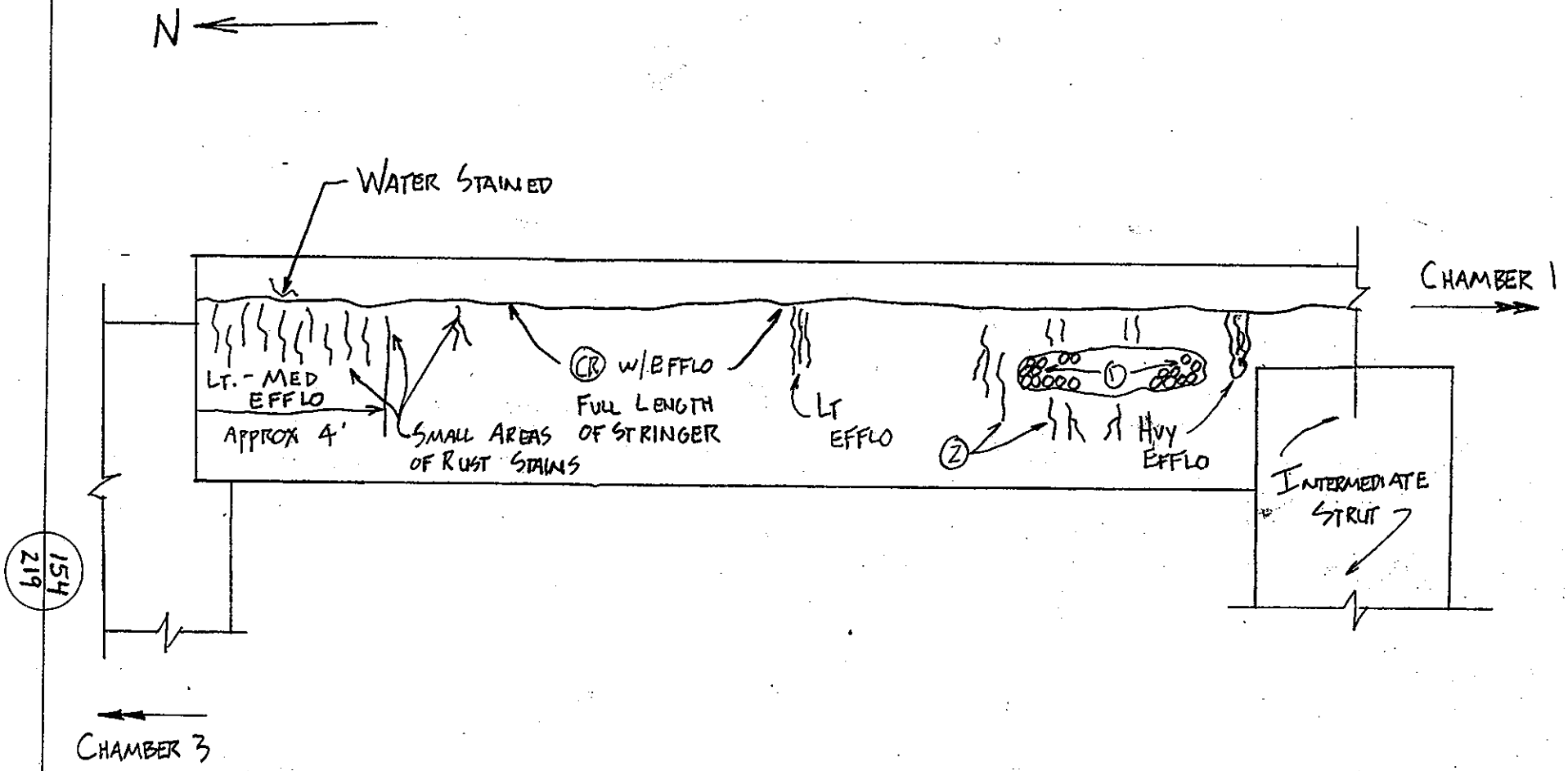

STRINGER 1 - WEST ELEV.

SOUTH ABUT - CHAMBER 2

NOTES:

1. HONEY COMB AREA 3'L x 2'H
2. INTERMITTANT RUST STAINING FOR 10' NORTH OF INTER. STRUT

DEPARTMENT OF THE ARMY NEW ENGLAND DIVISION CORPS OF ENGINEERS	
BOURNE HIGHWAY BRIDGE ROUTINE INSPECTION	
NOTES BY: LICHTENSTEIN CONSULTING ENGINEERS	
JOB #1784	DATE: 3/7/96
CREW: WM, TF	SHEET 1 OF 1

FIELD NOTES

JOB NO. 1784	BRIDGE NO. BOURNE
DATE 3/7/86	SHEET 5 OF 11
PREPARED BY: A.G. LICHTENSTEIN	CREW TF, PWN

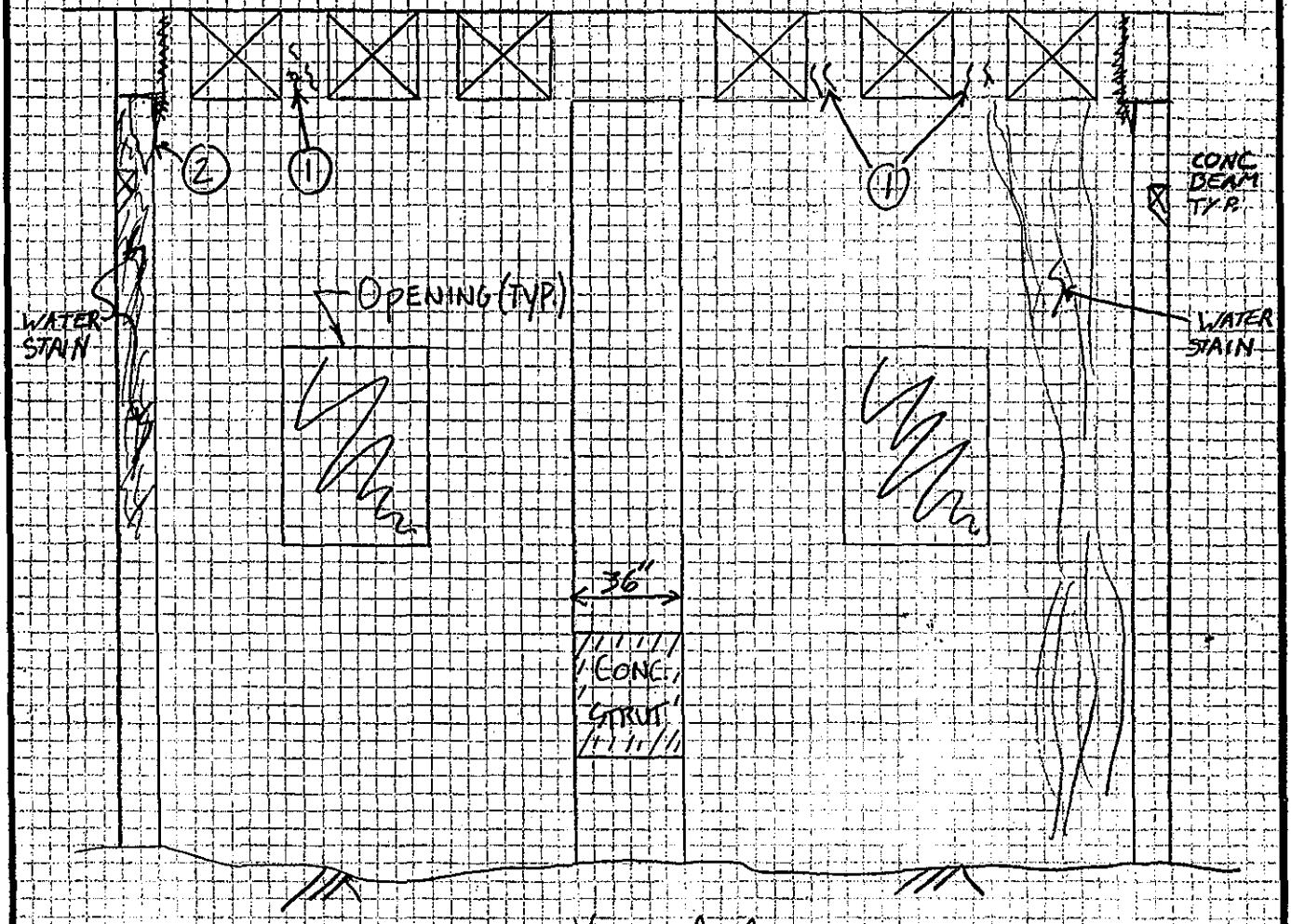

VIEW A-A

① WIRE FABRIC PROTRUDING FROM CONC.
② LEACHING 1'-0 x 4'-0

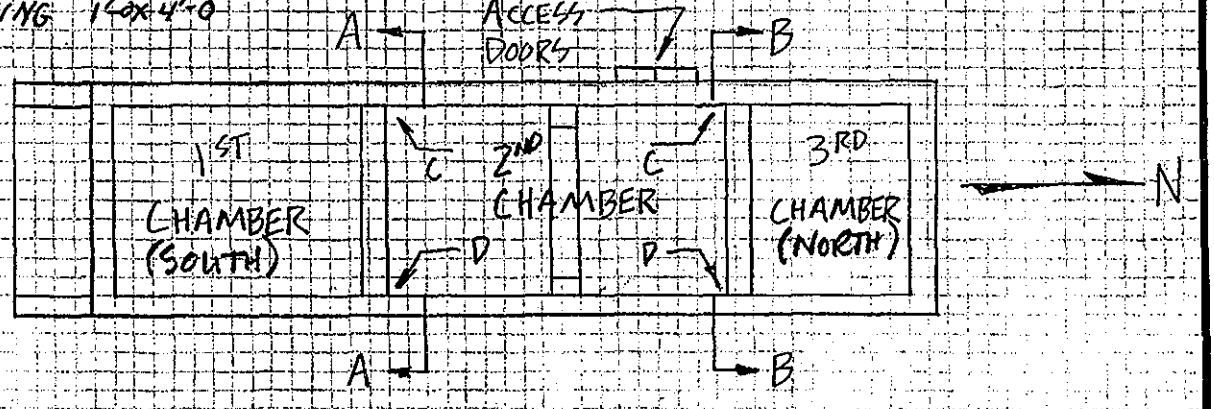

TRIPLE CHAMBER - SOUTH ABUT.
PLAN VIEW

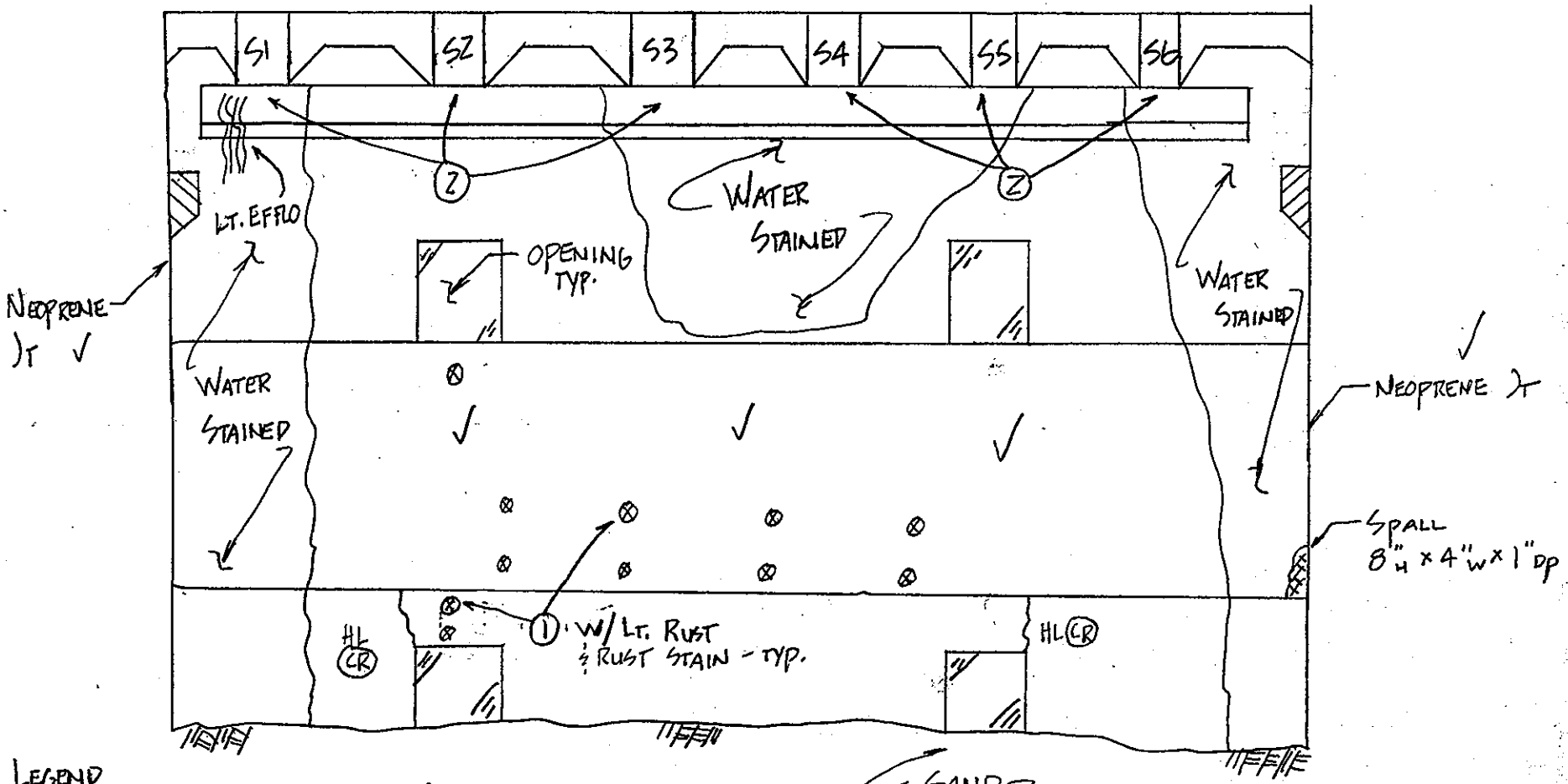

LEGEND

⊗ = Approx. 3" ϕ Popout

SOUTH ABUT- CHAMBER 2

SOUTH ELEV. - VIEW B-B - NORTH WALL

NOTES:

① RANDOM POPOUT APPROX 3" ϕ W/ 1" ϕ THREADED STEEL INSERT IN CENTER

② RUST STAINING UNDER EACH STRINGER

DEPARTMENT OF THE ARMY NEW ENGLAND DIVISION CORPS OF ENGINEERS	
BOURNE HIGHWAY BRIDGE ROUTINE INSPECTION	
NOTES BY: LICHTENSTEIN CONSULTING ENGINEERS	
JOB #1784	DATE: 3/7/96
CREW: WM, EL	SHEET 4 OF 7

FIELD NOTES

	JOB NO. 1784	BRIDGE NO. BOURNE
	DATE 3·7·96	SHEET 5/7
PREPARED BY: A.G. LICHTENSTEIN	CREW WM, EL	

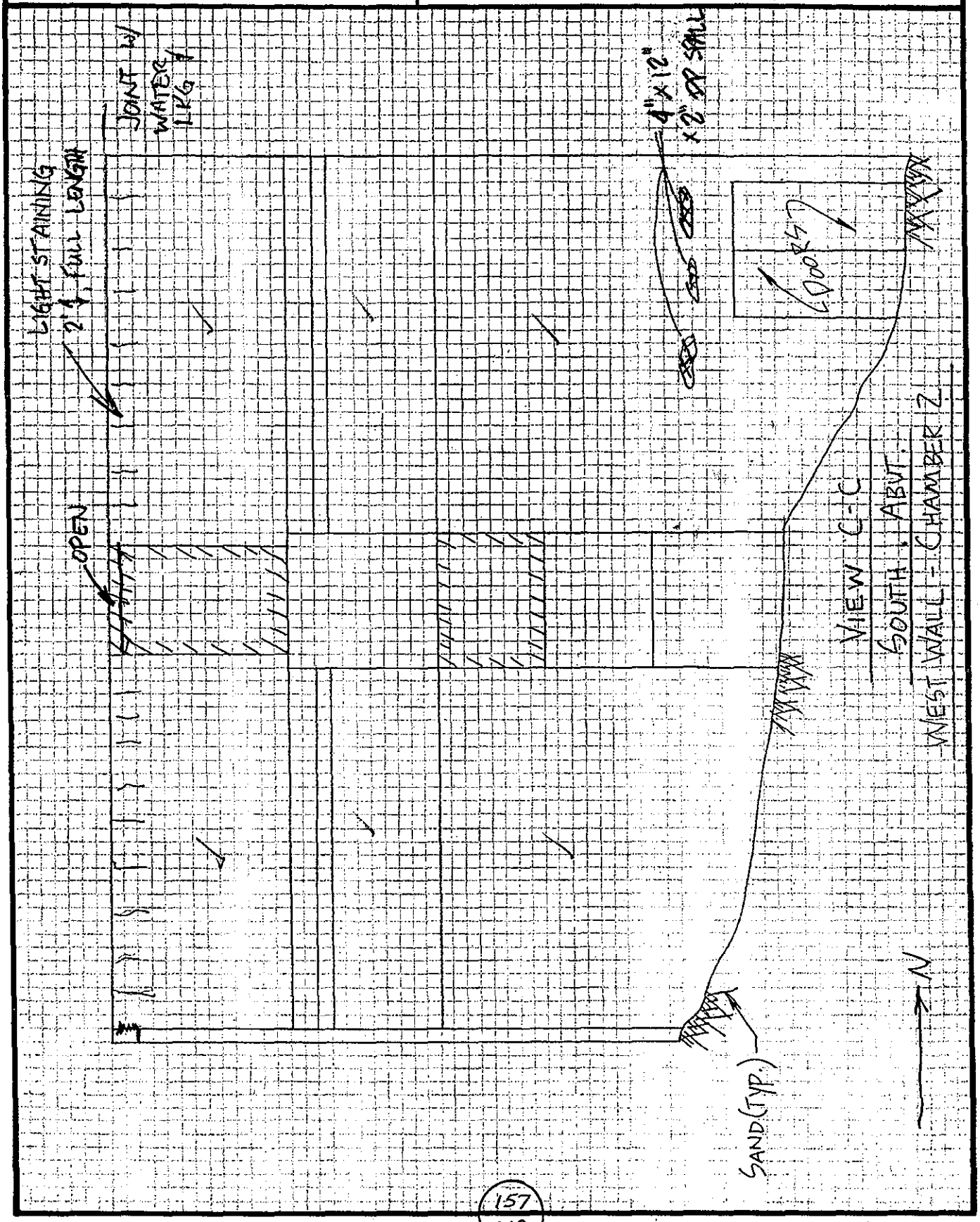

FIELD NOTES

	JOB NO. 1784	BRIDGE NO. BOURNE
	DATE 3/7/96	SHEET 8 OF 11
PREPARED BY: A.G. LICHTENSTEIN	CREW PWN TF	

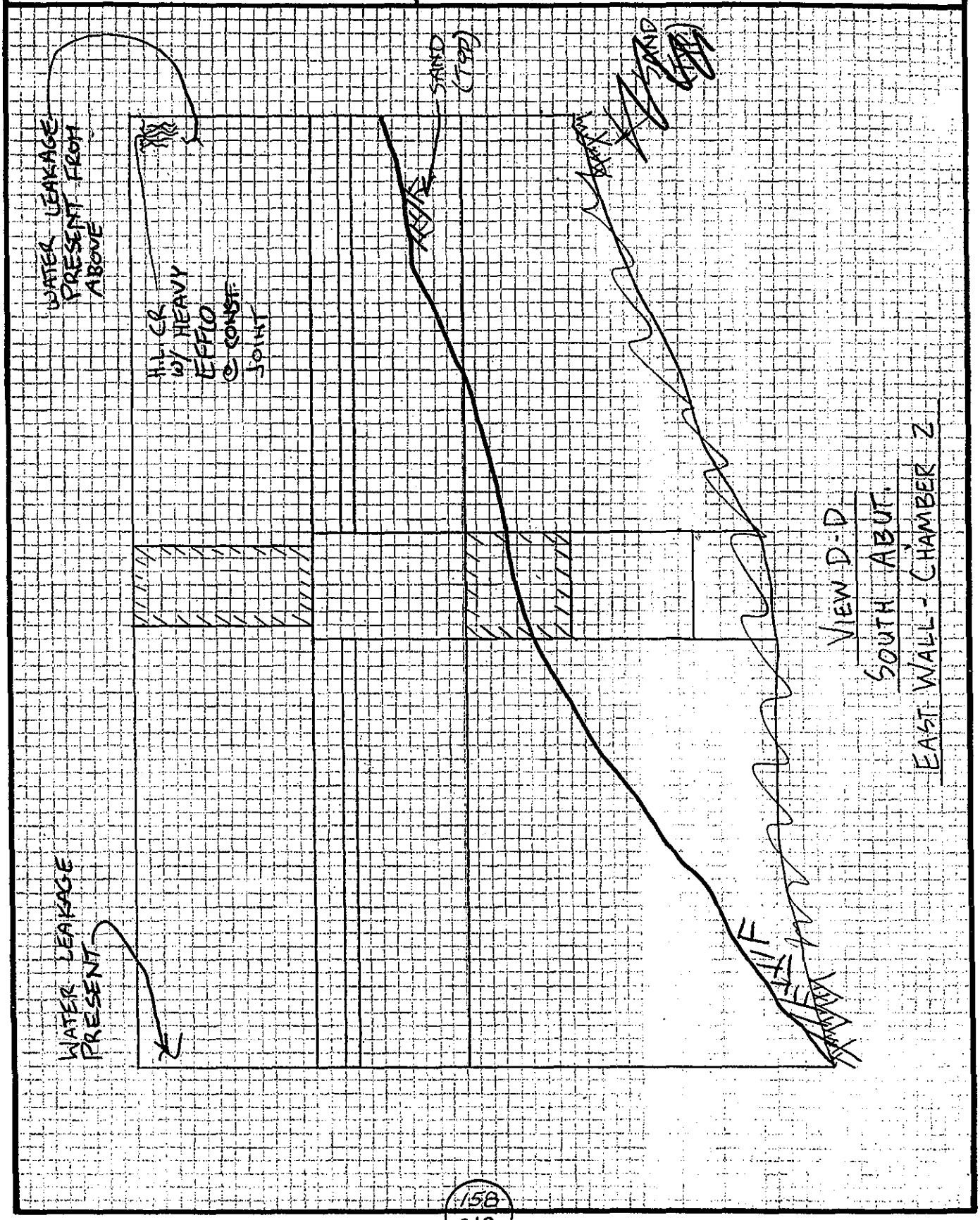

FIELD NOTES

	JOB NO. 1784	BRIDGE NO. BOURNE
	DATE 3/7/96	SHEET 6 OF 11
PREPARED BY: A.G. LICHTENSTEIN	CREW TF, PWN	

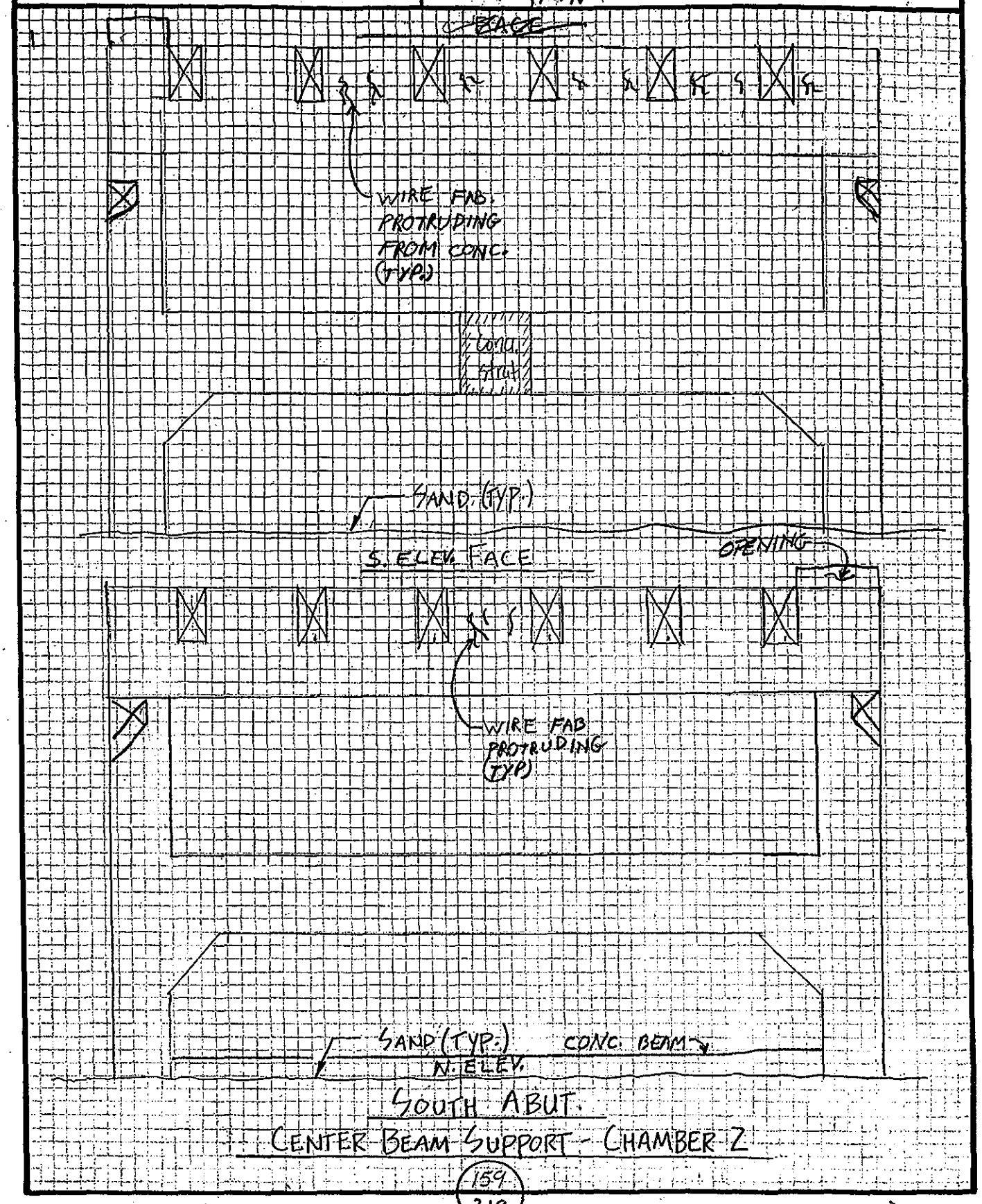

SOUTH ABUT.
CENTER BEAM SUPPORT - CHAMBER 2

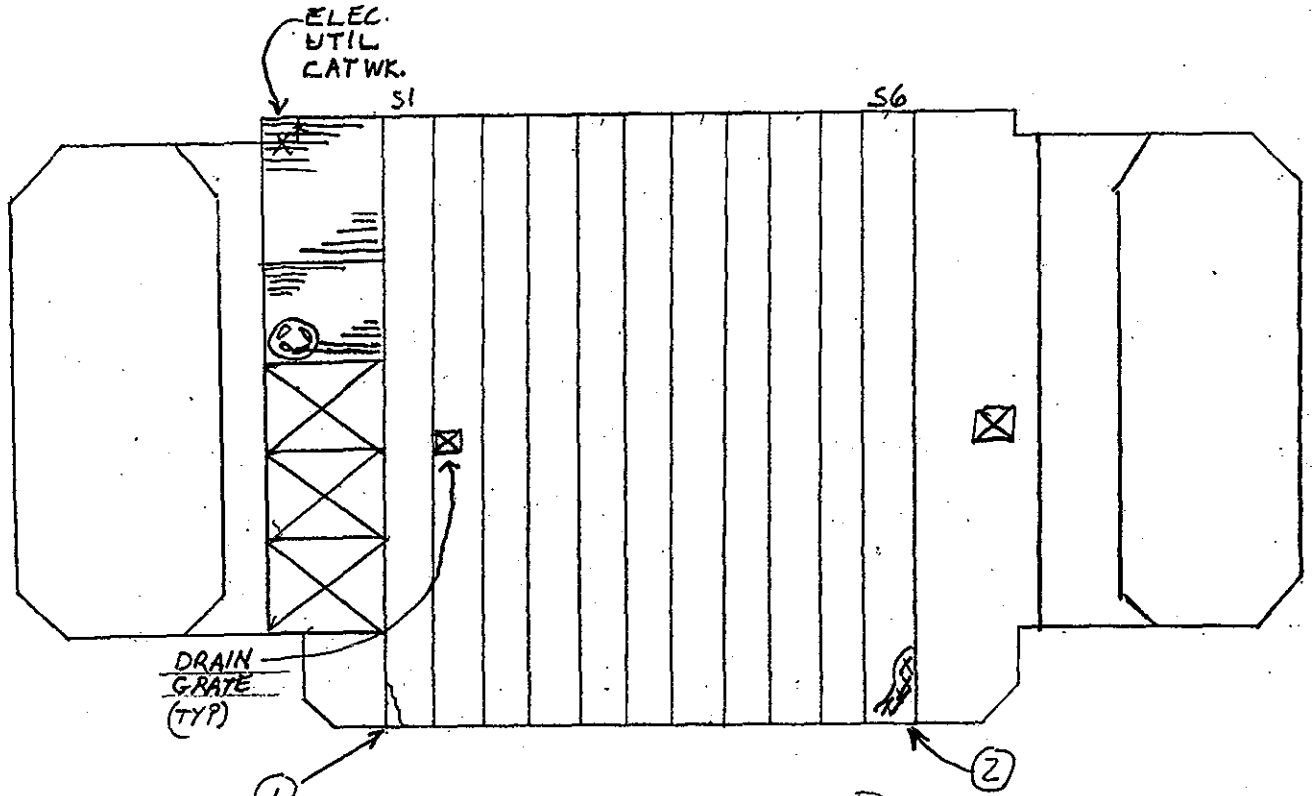

N

VIEW OF UNDERSIDE OF DECK
SOUTH ABUT - CHAMBER 3 (NORTH CHAMBER)

PLAN AS SEEN
FROM ABOVE
LOOKING DOWN

NOTES: (1) LEACHING 6" x 12"
(2) 18" x 6" SPALL

SUBSTRUCTURE	
DEPARTMENT OF THE ARMY NEW ENGLAND DIVISION CORPS OF ENGINEERS	
BOURNE HIGHWAY BRIDGE ROUTINE INSPECTION	
NOTES BY: LICHTENSTEIN CONSULTING ENGINEERS	
JOB #1784	DATE: 3/7/96
CREW: TF, PWN	SHEET 2 OF 11

160
219

FIELD NOTES	JOB NO. 1784	BRIDGE NO. BOURNE
	DATE 3/7/96	SHEET 3 OF 11
PREPARED BY: A.G. LICHTENSTEIN	CREW PWN, TF	

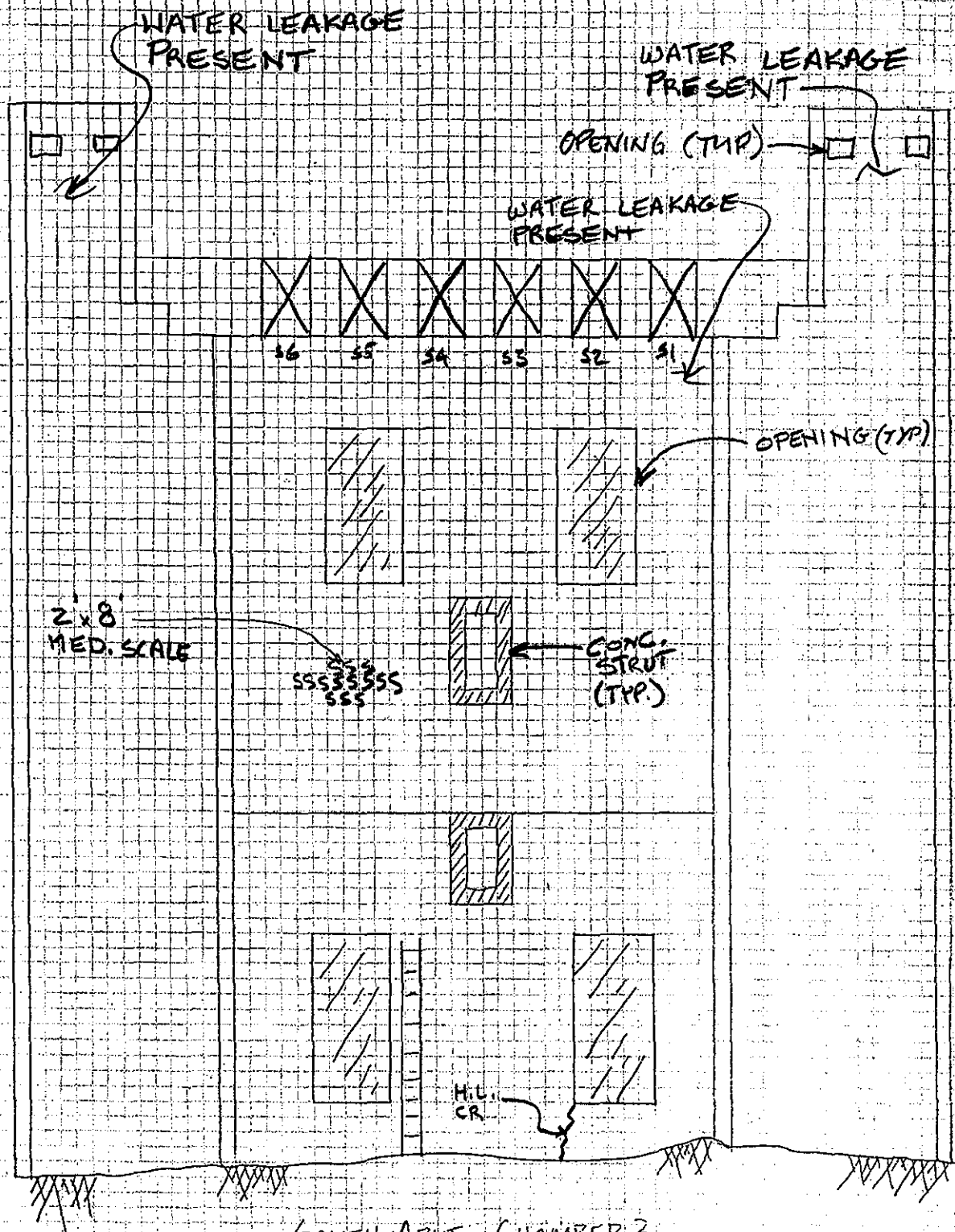

SOUTH ABUT - CHAMBER 3

NORTH FACE OF SOUTH WALL

FIELD NOTES

	JOB NO. 1784	BRIDGE NO. BOURNE
	DATE 3/7/96	SHEET 4 OF 11
PREPARED BY: A.G. LICHTENSTEIN	CREW PHN TF	

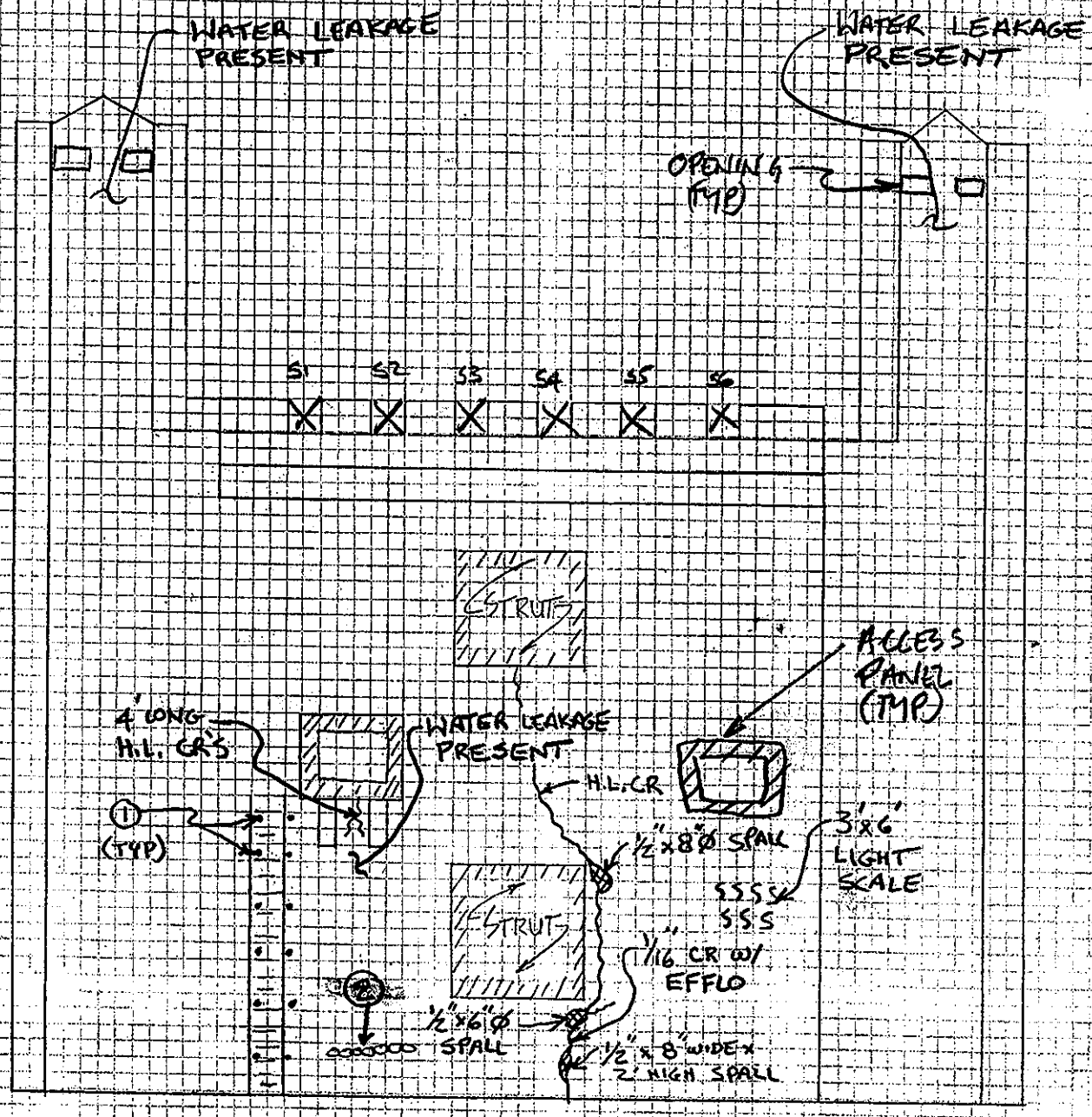

1 EXPOSED STEEL IN CONCRETE W/ ACTIVE CORROSION, STEEL IS POSSIBLE REMNANTS OF OLD LADDER CONNECTIONS

2 LIGHT HONEYCOMB ALONG CONST. JOINT

SOUTH ABUT.

NORTH WALL - CHAMBER 3

(S. ELEV.)

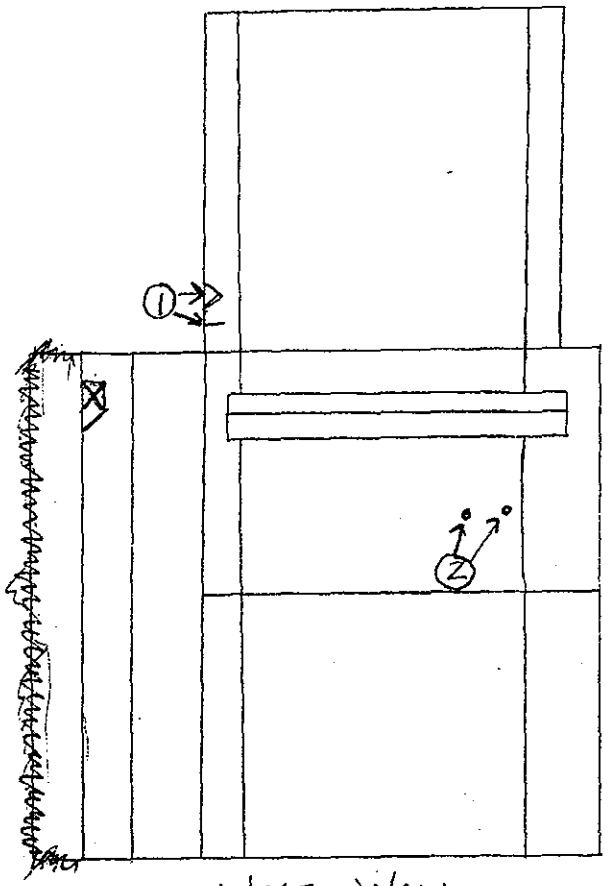

WEST WALL
EAST ELEV.

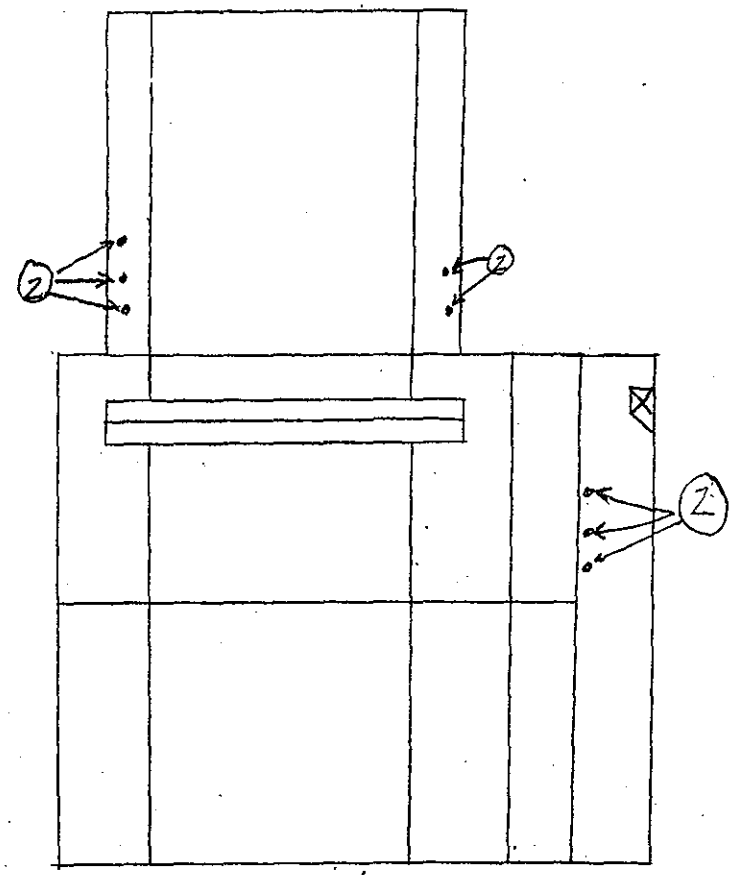

EAST WALL
WEST ELEV.

SOUTH ABUT - CHAMBER 3
(NORTH CHAMBER)

NOTES: ① STEEL BRKT. ATTACHED TO CONC.
② REBAR PROTRUDING OUT OF CONC.

SUBSTRUCTURE

DEPARTMENT OF THE ARMY
NEW ENGLAND DIVISION CORPS OF ENGINEERS

BOURNE HIGHWAY BRIDGE
ROUTINE INSPECTION

NOTES BY: LICHTENSTEIN
CONSULTING ENGINEERS

JOB #1784	DATE: 3/7/96
CREW: TF, PWN	SHEET 1 OF 11

163
219

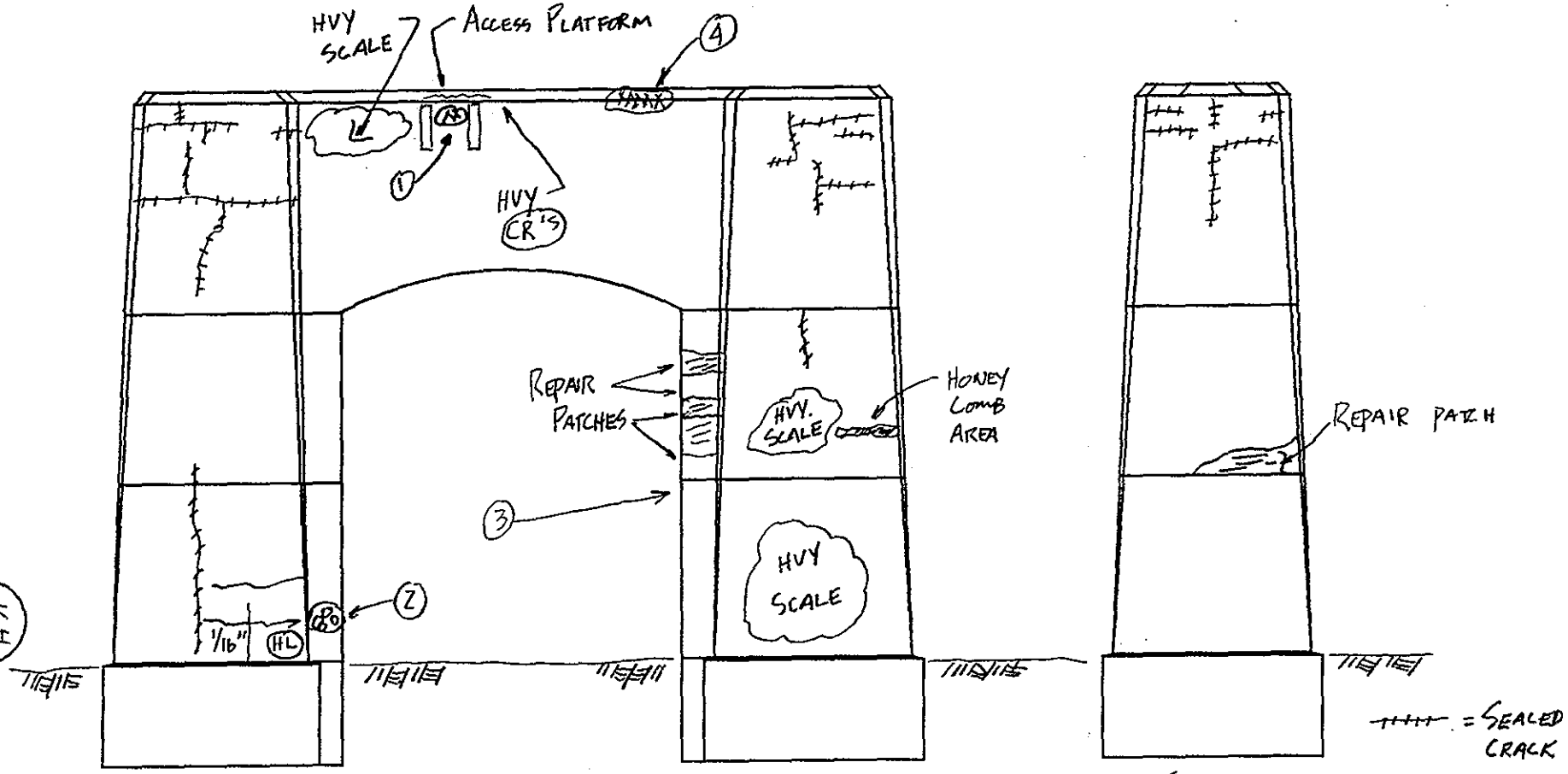

S ELEVATION

E ELEV.

Typ. NOTE: RANDOM PATCHES OF LT-MED. SCALE - APPROX. 1/3 OF SURFACE AREA - TYP.

B7-23

PIER 5

NOTES:

1. SPALL ≈ 3'L x 12"H x 2" DP W/ DELAMINATED AREA APPROX. SAME SIZE
2. HONEY COMB AREA 3'W x 2'H
3. 3' x 2' SEALED AREA W/ MC
4. SPALL 2'L x 4"W

SUBSTRUCTURE

DEPARTMENT OF THE ARMY
NEW ENGLAND DIVISION CORPS OF ENGINEERS

BOURNE HIGHWAY BRIDGE
ROUTINE INSPECTION

NOTES BY: LICHTENSTEIN CONSULTING ENGINEERS

JOB #1784	DATE: 3/18/96
CREW: WM, GG	SHEET 14 OF 19

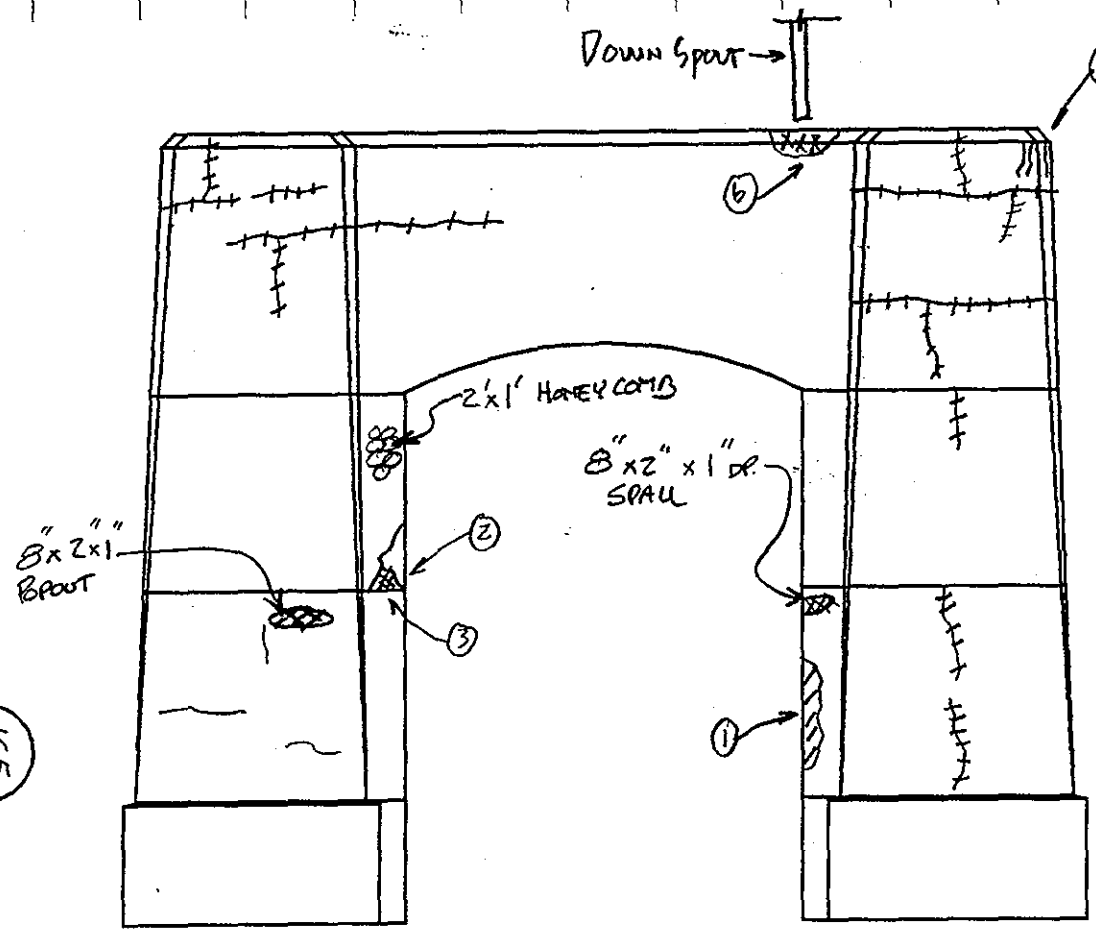

N ELEVATION

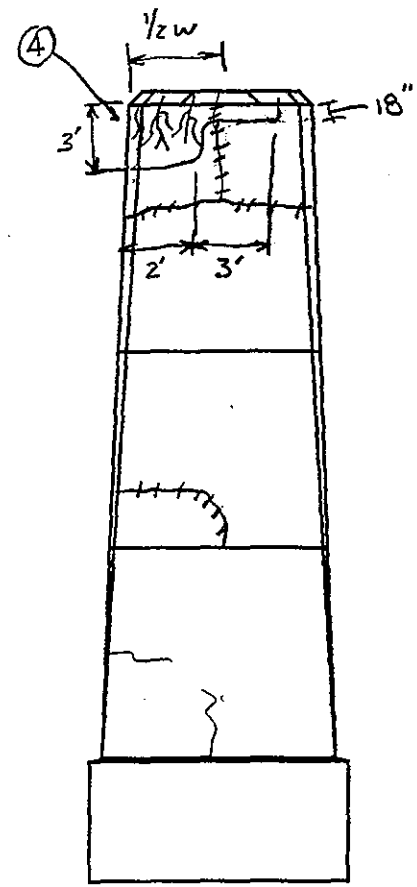

W ELEV.

+++++ = SEALED CRACK

NOTE: SEE TYP. NOTE FOR PIER 5 - S. ELEV.

UPDATED 3/22/96 GG

PIER 5

NOTES:

1. REPAIR PATCH W/ HOLLOW AREA 1'W x 4'H, DELAMINATED & HL (MC)
2. REPAIR PATCH W/ HL (MC)
3. SPALL 6" Φ x 1/2" DP @ REPAIR PATCH
4. FAILED REPAIR PATCH FOR 1/2 WIDTH OF TOP OF PIER (NORTHERN HALF) PATCH HAS HL (MC) W/ EFFLO
5. HL (MC) W/ MINOR EFFLO CONTINUATION OF COND (4)
6. SPALL 36"L x 12"W x 4" DP

SUBSTRUCTURE	
DEPARTMENT OF THE ARMY NEW ENGLAND DIVISION CORPS OF ENGINEERS	
BOURNE HIGHWAY BRIDGE ROUTINE INSPECTION	
NOTES BY: LICHTENSTEIN CONSULTING ENGINEERS	
JOB #1784	DATE: 3/18/96
CREW: WM, GG	SHEET 15 OF 19

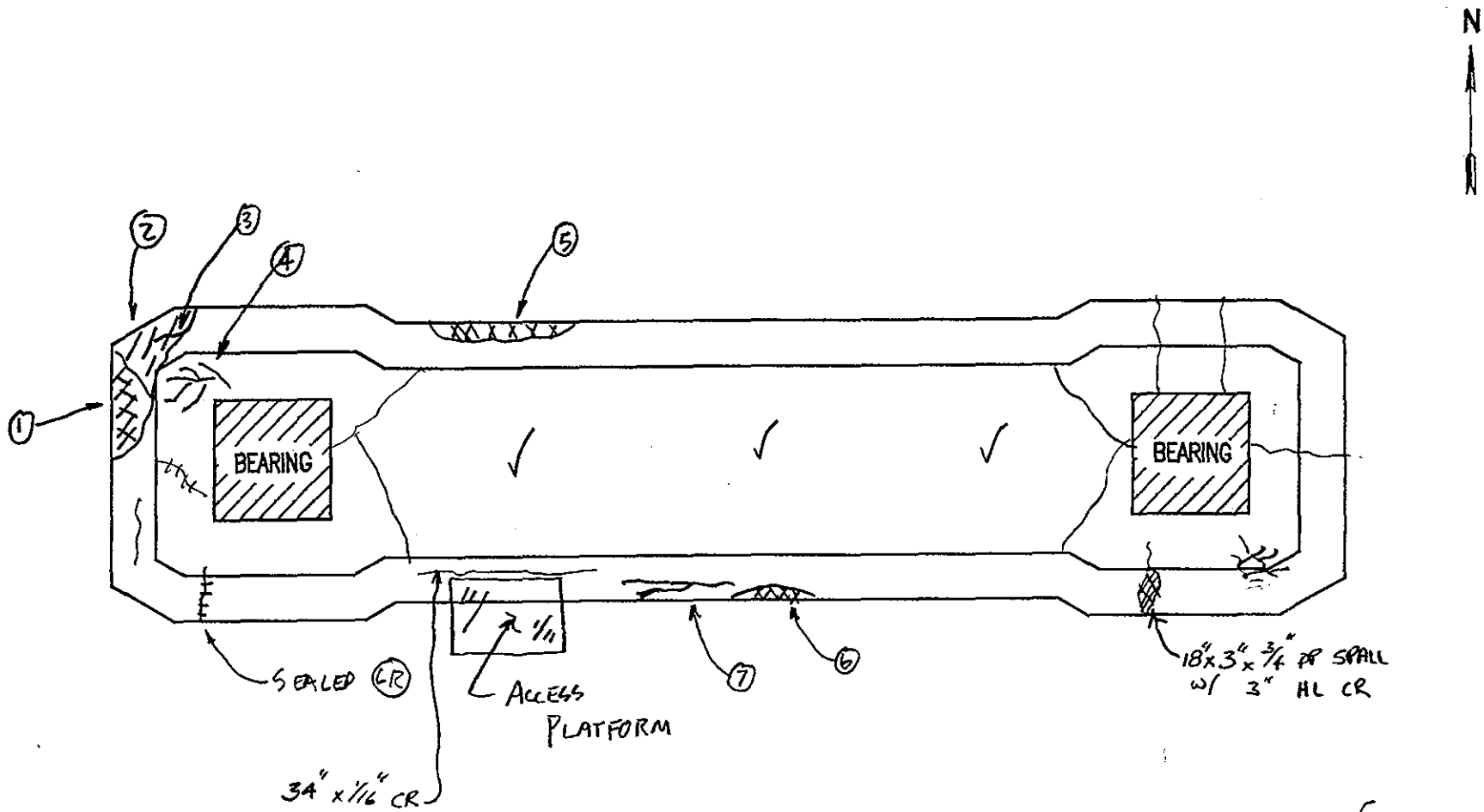

PIER 5

NOTES:

1. SPALL 28" L x 18" W x 2" DP EXTENDING DOWN SIDE OF PIER
2. HOLLOW AREA 24" L x 18" W W/ IMMINENT SPALL
3. UP TO 1/16" CR 18" L
4. LT. HL MC 3' x 3'
5. SPALL 34" L x 16" W x 2" DP
6. SPALL 30" x 4" W x 2" DP
7. HL MC 4' L W/ MINOR EFFLO

TOP OF PIER

DEPARTMENT OF THE ARMY
NEW ENGLAND DIVISION CORPS OF ENGINEERS

BOURNE HIGHWAY BRIDGE
ROUTINE INSPECTION

NOTES BY: LICHTENSTEIN
CONSULTING ENGINEERS

JOB #1784 | DATE: 3/19/96
CREW: WM/GG | SHEET 7 OF 11

166
219

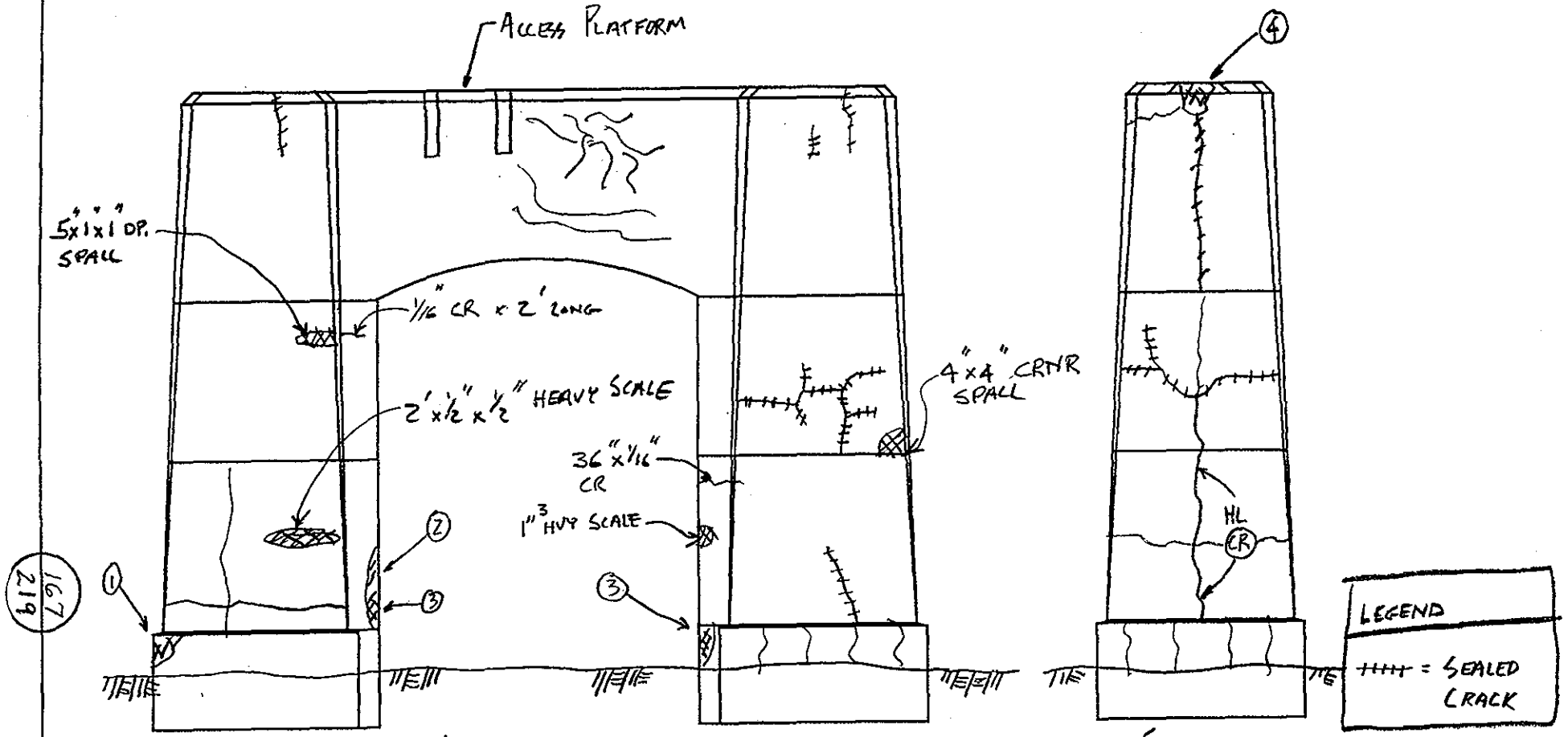

NOTE: FOR TYP. NOTE SEE PIER 5 - S. ELEV

UPDATED 3/22/96 PWH

PIER 3

NOTES:

1. CORNER SPALL - 12" x 12"
2. REPAIR PATCH - HOLLOW AREA 4'H x 1'W, DELAMINATED W/ HL (MC) EXTENDS AROUND CORNER TO EAST ELEV.
3. CORNER SPALL 4" x 4" x 12" H
4. SPALL 12" x 12" x 2" DP

SUBSTRUCTURE	
DEPARTMENT OF THE ARMY NEW ENGLAND DIVISION CORPS OF ENGINEERS	
BOURNE HIGHWAY BRIDGE ROUTINE INSPECTION	
NOTES BY: LICHTENSTEIN CONSULTING ENGINEERS	
JOB #1784	DATE: 3/18/96
CREW: WM/GG	SHEET 16 OF 19

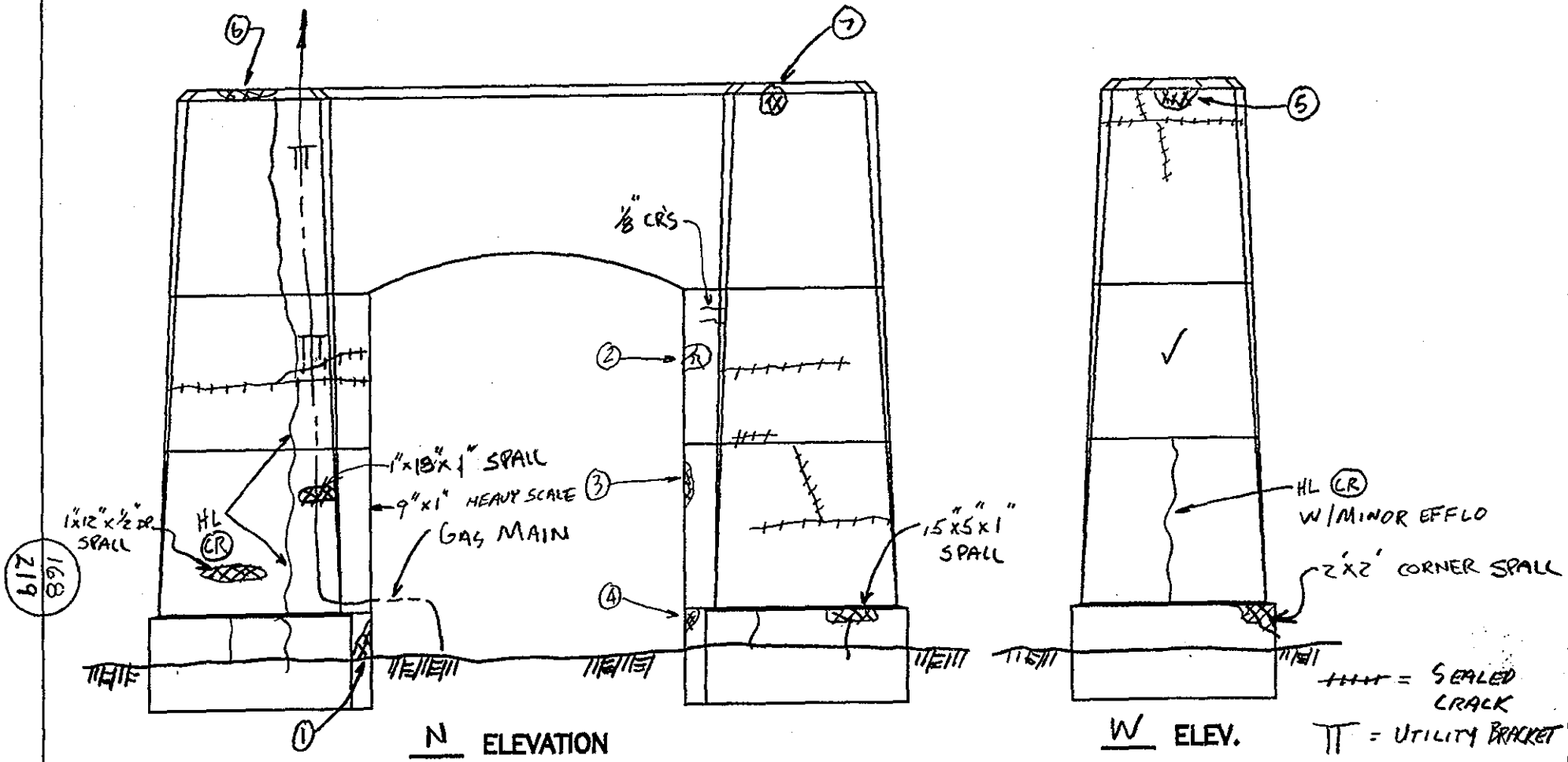

168/219

NOTE: FOR TYP. NOTE SEE PIER 5 - S. ELEV.

UPDATED 3/22/96 PWN

PIER 3

NOTES:

① CORNER SPALL - 6" x 6" x 16" H
② REPAIR PATCH W/ HL (MC) 6" W x 8"
③ REPAIR PATCH W/ SPALL 12" L x 10" H x 2" DP W/ MINOR HL (MC) ON EAST FACE
④ CORNER SPALL 3" x 3" x 12" L
⑤ SPALL 18" L x 12" W x 2" DP. MAX
⑥ SPALL 3' L x 3" DOWN FROM TOP OF CHAMFER (SEE TOP OF PIER NOTE)
⑦ 10" ϕ x 2" DP SPALL @ EDGE OF CHAMFER

SUBSTRUCTURE	
DEPARTMENT OF THE ARMY NEW ENGLAND DIVISION CORPS OF ENGINEERS	
BOURNE HIGHWAY BRIDGE ROUTINE INSPECTION	
NOTES BY: LICHTENSTEIN CONSULTING ENGINEERS	
JOB #1784	DATE: 3/18/96
CREW: WM/GG	SHEET 17 OF 19

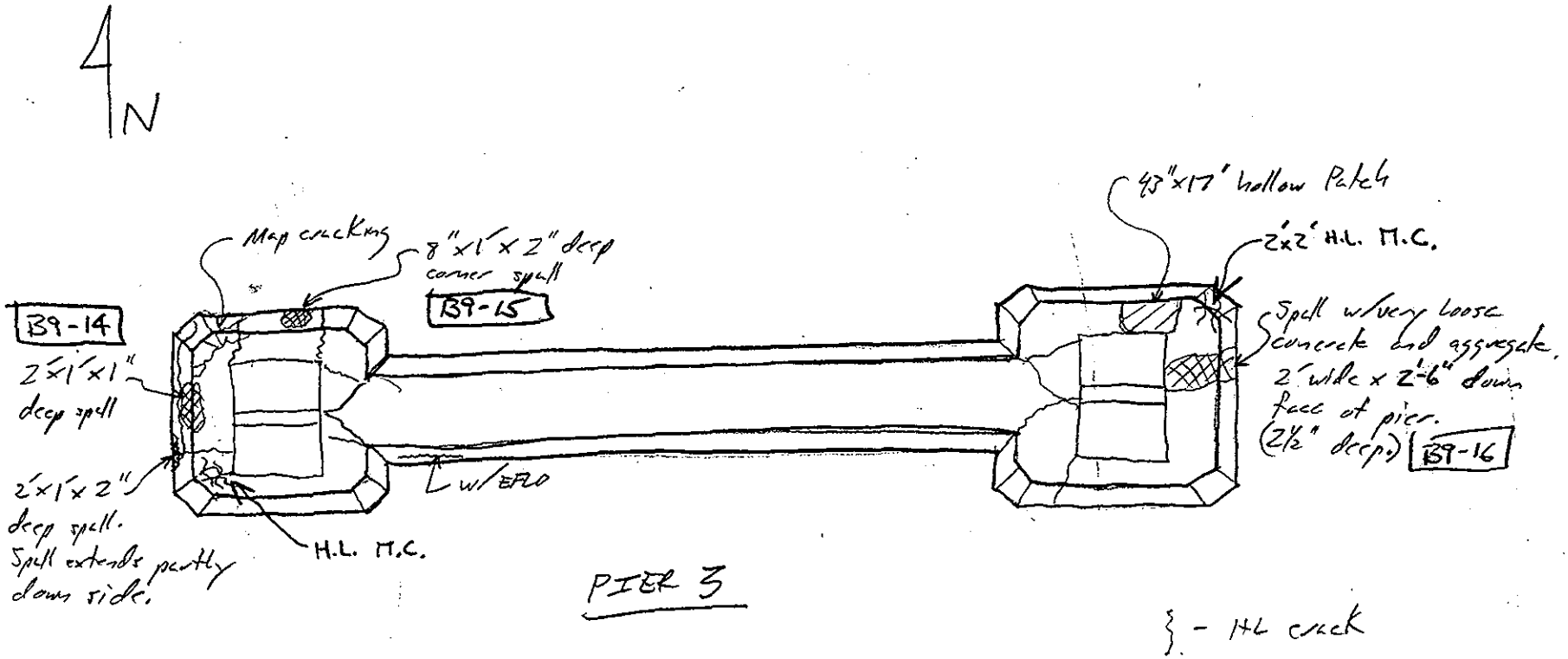

NOTES:

DEPARTMENT OF THE ARMY NEW ENGLAND DIVISION CORPS OF ENGINEERS	
BOURNE HIGHWAY BRIDGE ROUTINE INSPECTION	
NOTES BY: LICHTENSTEIN CONSULTING ENGINEERS	
JOB #1784	DATE: 3/19/96
CREW: JB PWN	SHEET 4 OF 8

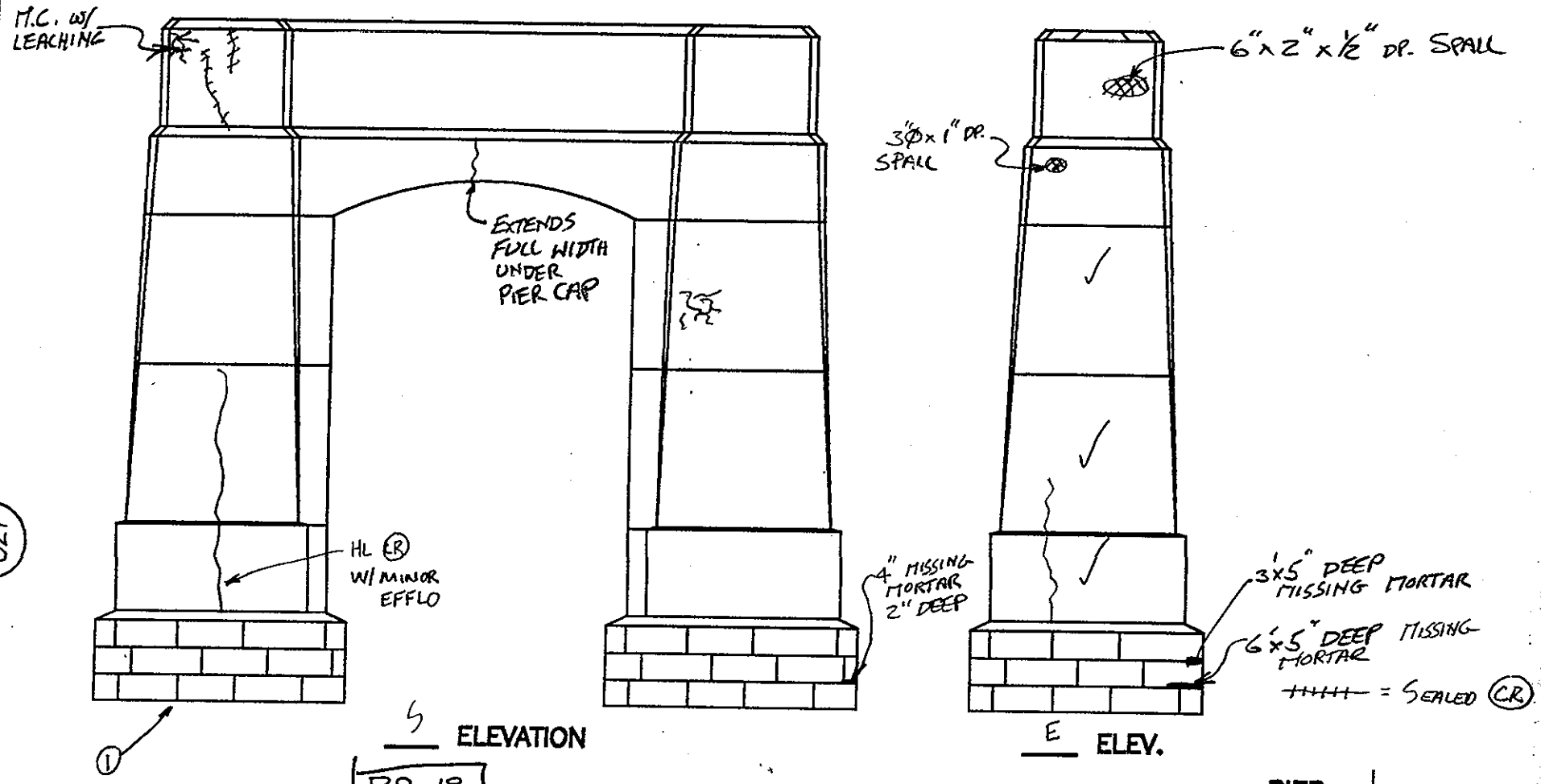

PIER 1

NOTES:

① LESS THAN 10% OF MORTAR JOINTS - MISSING OR LOOSE MORTAR - TYP.

② RANDOM PATCHES - VARYING IN SIZE - OVER 1/3 OF SURFACE AREA

SUBSTRUCTURE

DEPARTMENT OF THE ARMY
NEW ENGLAND DIVISION CORPS OF ENGINEERS

BOURNE HIGHWAY BRIDGE
ROUTINE INSPECTION

NOTES BY: LICHTENSTEIN CONSULTING ENGINEERS

JOB #1784	DATE: 3/18/96
CREW: WM / GG	SHEET 18 OF 19

219 170

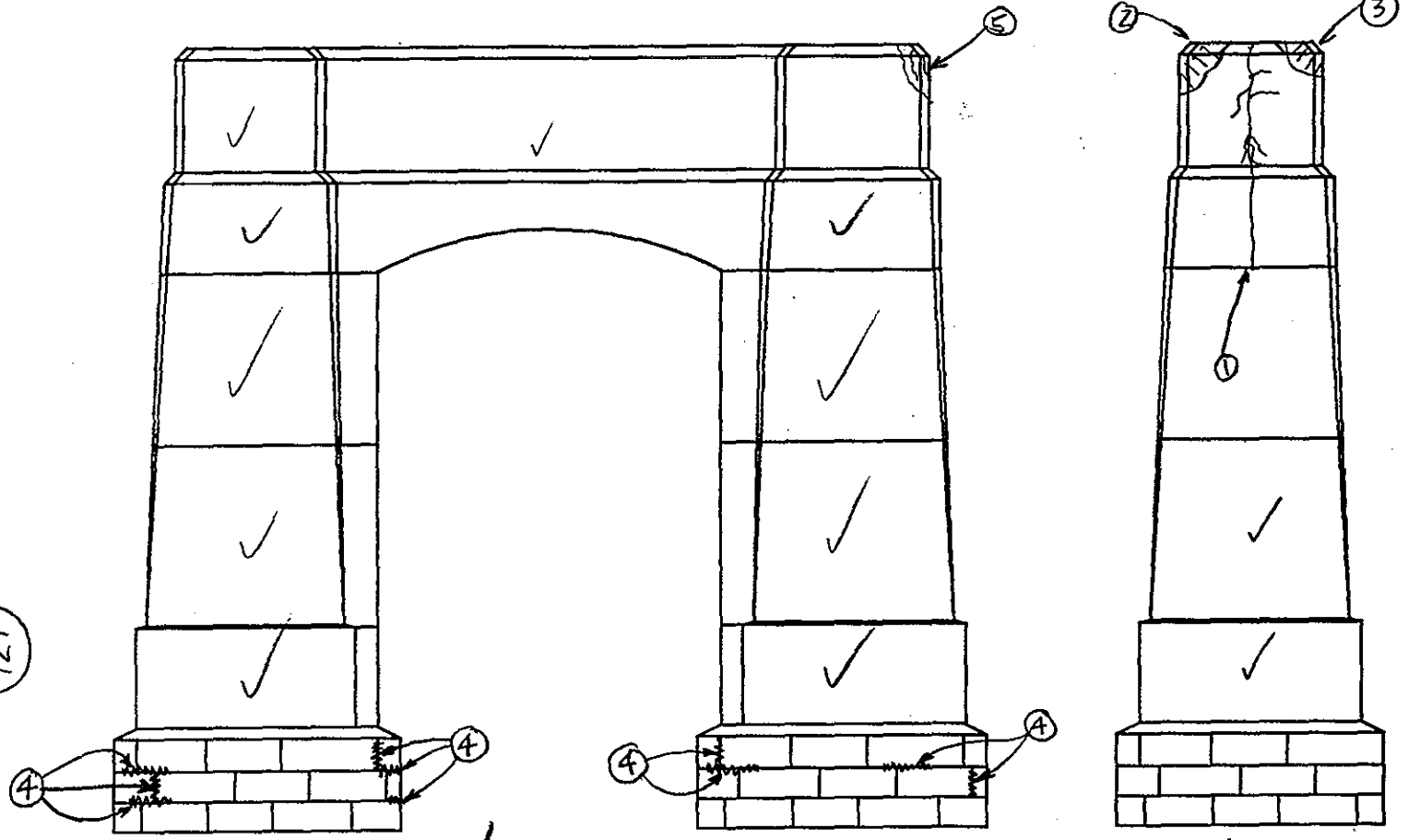

N ELEVATION

W ELEV.

PIER 1

NOTES:

1. (CR) 1/16" - 1/8" w/ MINOR EFFLO
2. DELAMINATED AREA ≈ 24" W x 12" H W/ HL (MC) & MED. EFFLO
3. SIM. TO COND (2) ≈ 16" W x 8" H W/ HL (MC) & MED. EFFLO
4. MISSING MORTAR IN JT.
5. SIM. TO COND (2) AREA OF LT-MED EFFLO ADJACENT TO COND (2)

SUBSTRUCTURE

DEPARTMENT OF THE ARMY
NEW ENGLAND DIVISION CORPS OF ENGINEERS

BOURNE HIGHWAY BRIDGE
ROUTINE INSPECTION

NOTES BY: LICHTENSTEIN
CONSULTING ENGINEERS

JOB #1784	DATE: 3/18/96
CREW: WM/GG	SHEET 19 OF 19

171
219

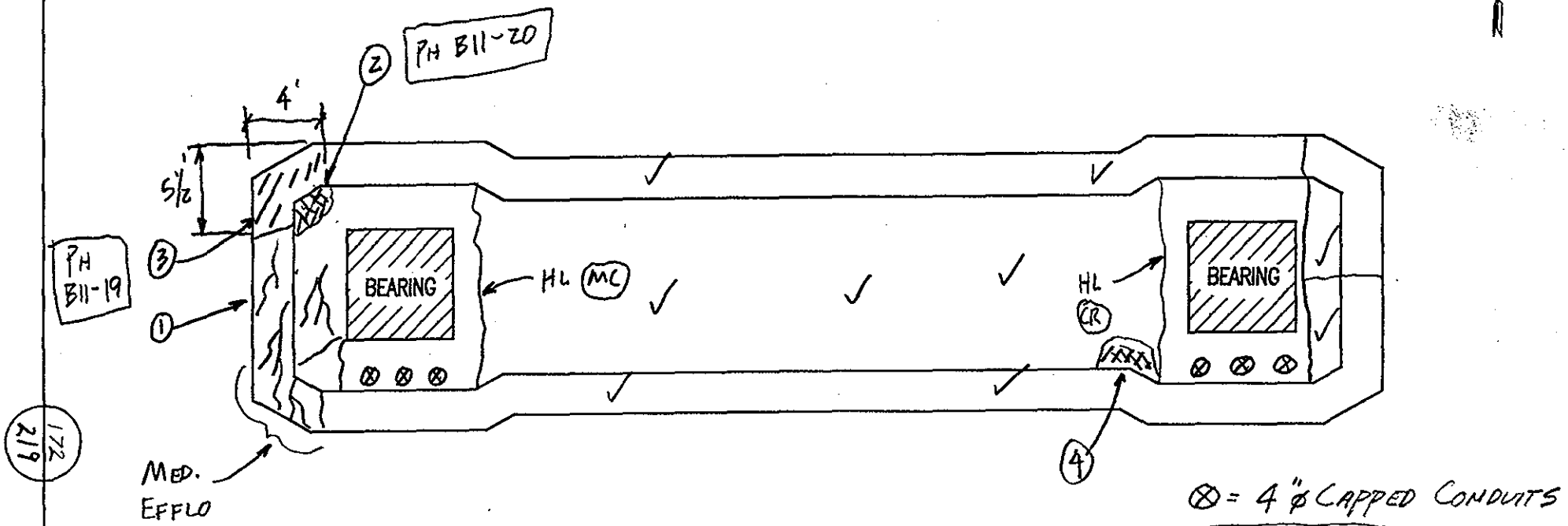

172
219

LADDER NOTES:
- RUNGS HAVE ADVANCED SECT. LOSS IN ISOLATED AREAS - UP TO 50% OF DIA. PH B5-21 & 22
- UP TO 100% SECTION LOSS ON CHANNEL FLANGES (4 LOCATIONS) W/ UP TO 1/8" PITT ON CHANNEL WEBS
- TYP. HVY RUST & ADVANCED SECT. LOSS @ LADDER CHANNEL SPLICES. - CONN'S. ARE TYP. OF PIER 2

PH B11-21-24

PIER 1

NOTES:
1. ENTIRE WEST SIDE TOP OF PIER - REPAIR PATCH HAS HL (MC) THROUGHOUT W/ LT EFFLO, MED. EFFLO ON S.W. CORNER W/ UP TO 1/16" (MC)
2. SPALL IN PATCH 1' x 1' x 1½" DP PH B11-20
3. HOLLOW AREA @ N.W. CORNER IN PATCH 5½' x 4' PH B11-19
4. SPALL 8" x 4" x ½" DP

REVISED 3/28/96 WM, JB

TOP OF PIER

DEPARTMENT OF THE ARMY
NEW ENGLAND DIVISION CORPS OF ENGINEERS

BOURNE HIGHWAY BRIDGE
ROUTINE INSPECTION

NOTES BY: LICHTENSTEIN CONSULTING ENGINEERS

JOB #1784	DATE: 3/19/96
CREW: WM/GG	SHEET 4 OF 11

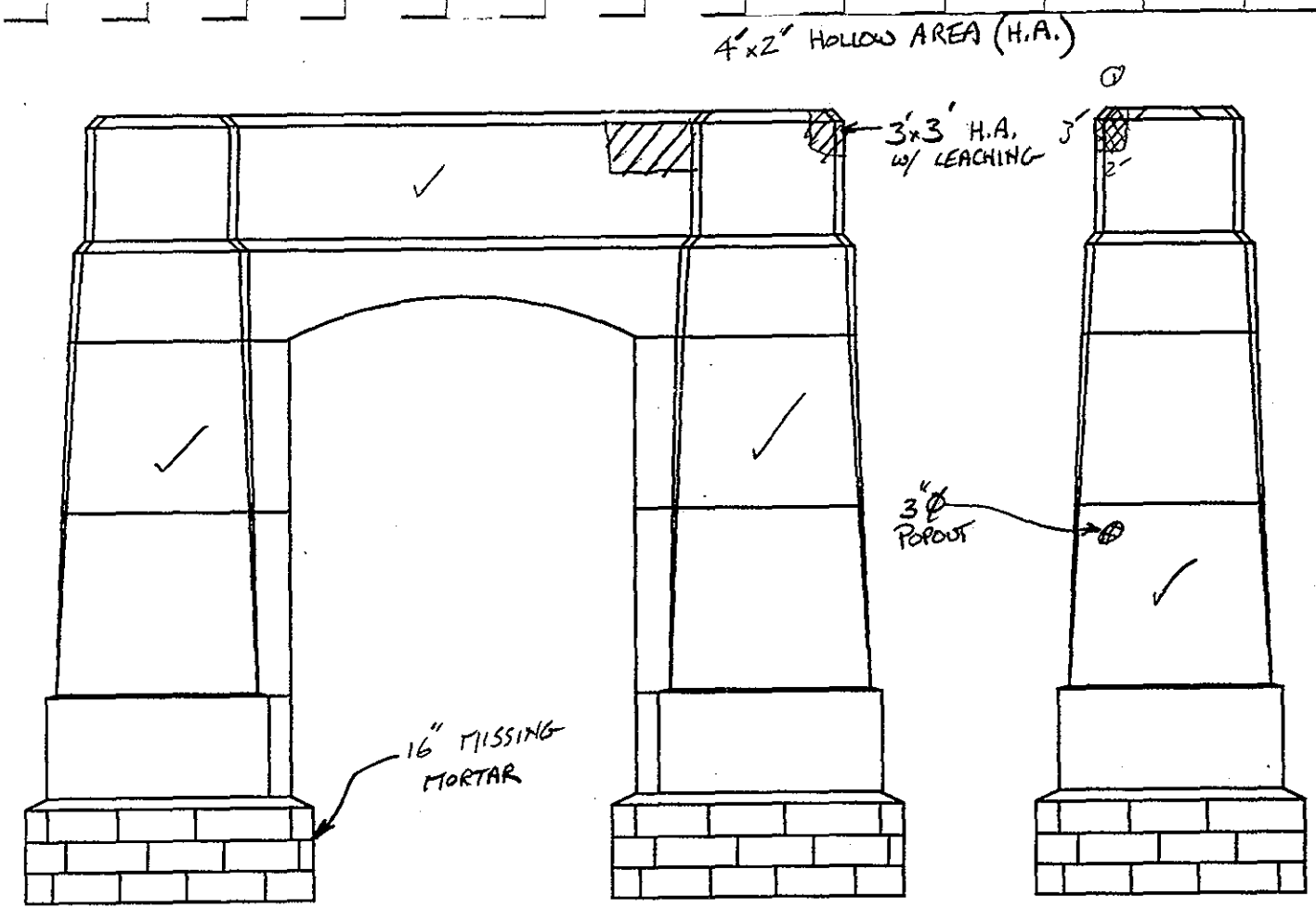

S ELEVATION

E ELEV.

PIER 2

NOTES:

⊘ Patch has light hairline cracking w/rust stains & efflo

SUBSTRUCTURE	
DEPARTMENT OF THE ARMY NEW ENGLAND DIVISION CORPS OF ENGINEERS	
BOURNE HIGHWAY BRIDGE ROUTINE INSPECTION	
NOTES BY: LICHTENSTEIN CONSULTING ENGINEERS	
JOB #1784	DATE: 3/12/96
CREW: JB/GG	SHEET 2 OF 5

219 173

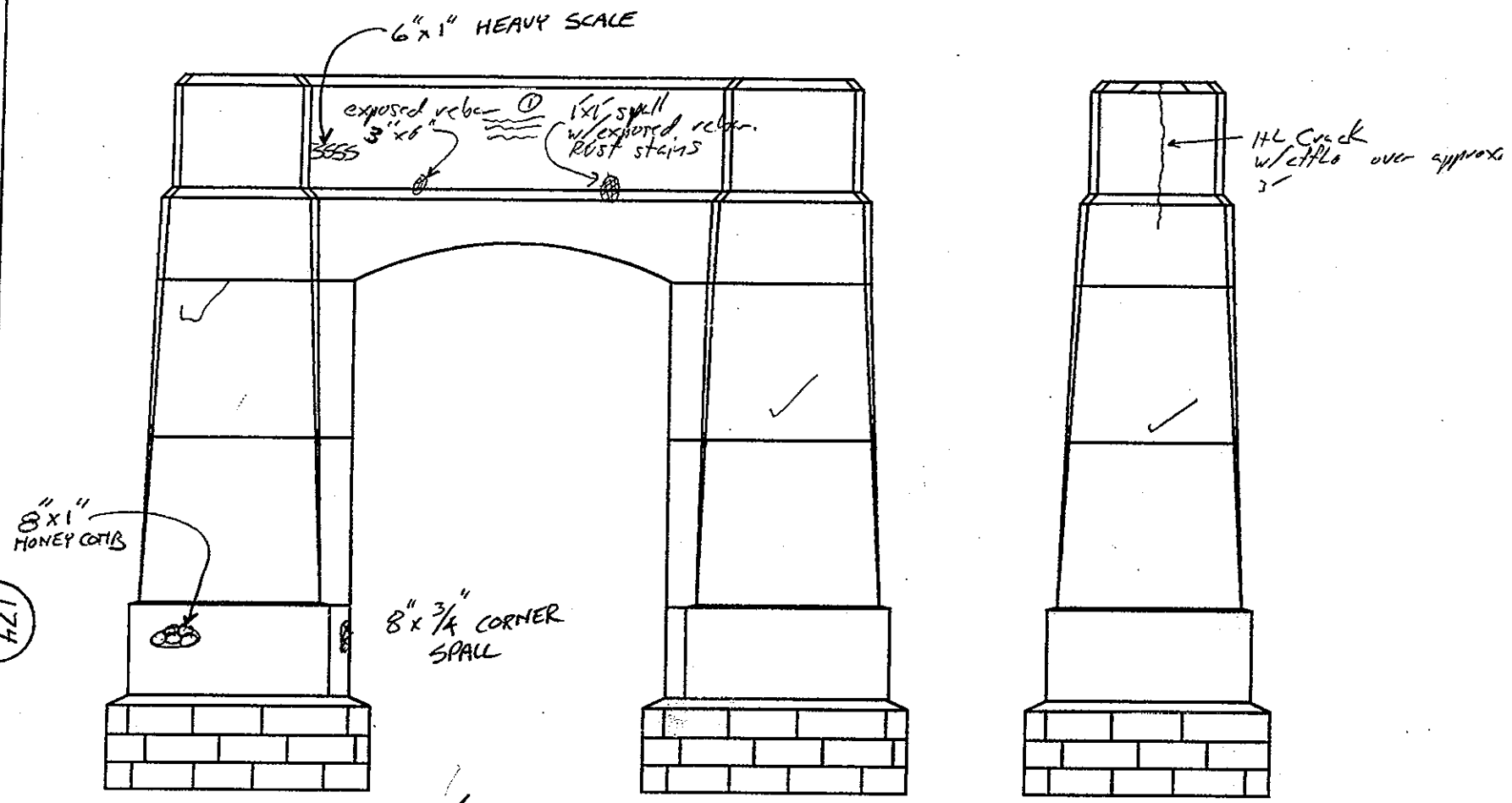

PIER 2

NOTES: ① Typically, top of pier face has light horizontal cracking. (8' Long) No rust or efflo present.

SUBSTRUCTURE	
DEPARTMENT OF THE ARMY NEW ENGLAND DIVISION CORPS OF ENGINEERS	
BOURNE HIGHWAY BRIDGE ROUTINE INSPECTION	
NOTES BY: LICHTENSTEIN CONSULTING ENGINEERS	
JOB #1784	DATE: 3/12/96
CREW: JB/GG	SHEET 1 OF 6

219 174

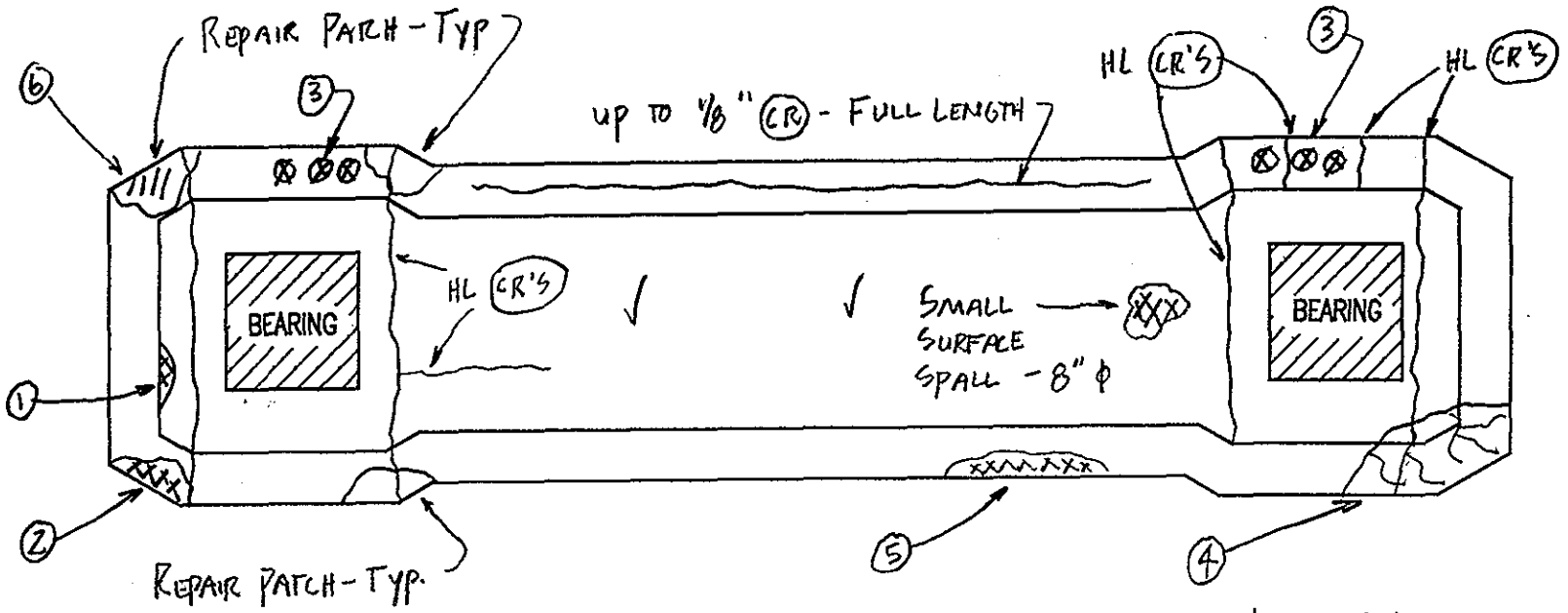

LEGEND:
⊗ = 4" ϕ CONDUIT

PIER 2

NOTES:

1. SPALL 12" L x 4" W x 1/4" DP
2. SPALL 20" L x 2" W x 1/2" DP
3. 3 - 4" ϕ CONDUITS
4. REPAIR PATCH - 24" L x 18" WIDE (MC) & DELAMINATED
5. SPALL 12" x 3" x 1/2" DP
6. 2' x 2' HOLLOW PATCH W/ SSSP @ CORNER CHAMFER

REVISED 3/27/96 WM, JB

TOP OF PIER

DEPARTMENT OF THE ARMY
NEW ENGLAND DIVISION CORPS OF ENGINEERS

BOURNE HIGHWAY BRIDGE
ROUTINE INSPECTION

NOTES BY: LICHTENSTEIN
CONSULTING ENGINEERS

JOB #1784	DATE: 3/12/96
CREW: WM/SD	SHEET 3 OF 5

219 175 612

PIER 2

ACCESS LADDER NOTES

PH B11-12, 13

- UP TO 1/4" PITT. ON LADDER RUNGS @ VARIOUS LOC'S. FOR LENGTH OF LADDER.
- (AD) @ BOLTS CONNECTING LADDER CHANNEL TO CATWALK L & FLBM BRACKET @ TOP CONN. TO CATWALK
- CORROSION & HVY RUST @ LADDER CHANNEL SPLICES - TYP.
- SPLICES ARE BOLTED & WELDED ON LADDER - BUT THE CONN. BRACKET FROM LADDER TO DIAG. X-BRACING ONLY WELDED.

176 219

NOTES:

DEPARTMENT OF THE ARMY NEW ENGLAND DIVISION CORPS OF ENGINEERS	
BOURNE HIGHWAY BRIDGE ROUTINE INSPECTION	
NOTES BY: LICHTENSTEIN CONSULTING ENGINEERS	
JOB #1784	DATE: 3/28/96
CREW: WM / JB	SHEET 1 OF 1

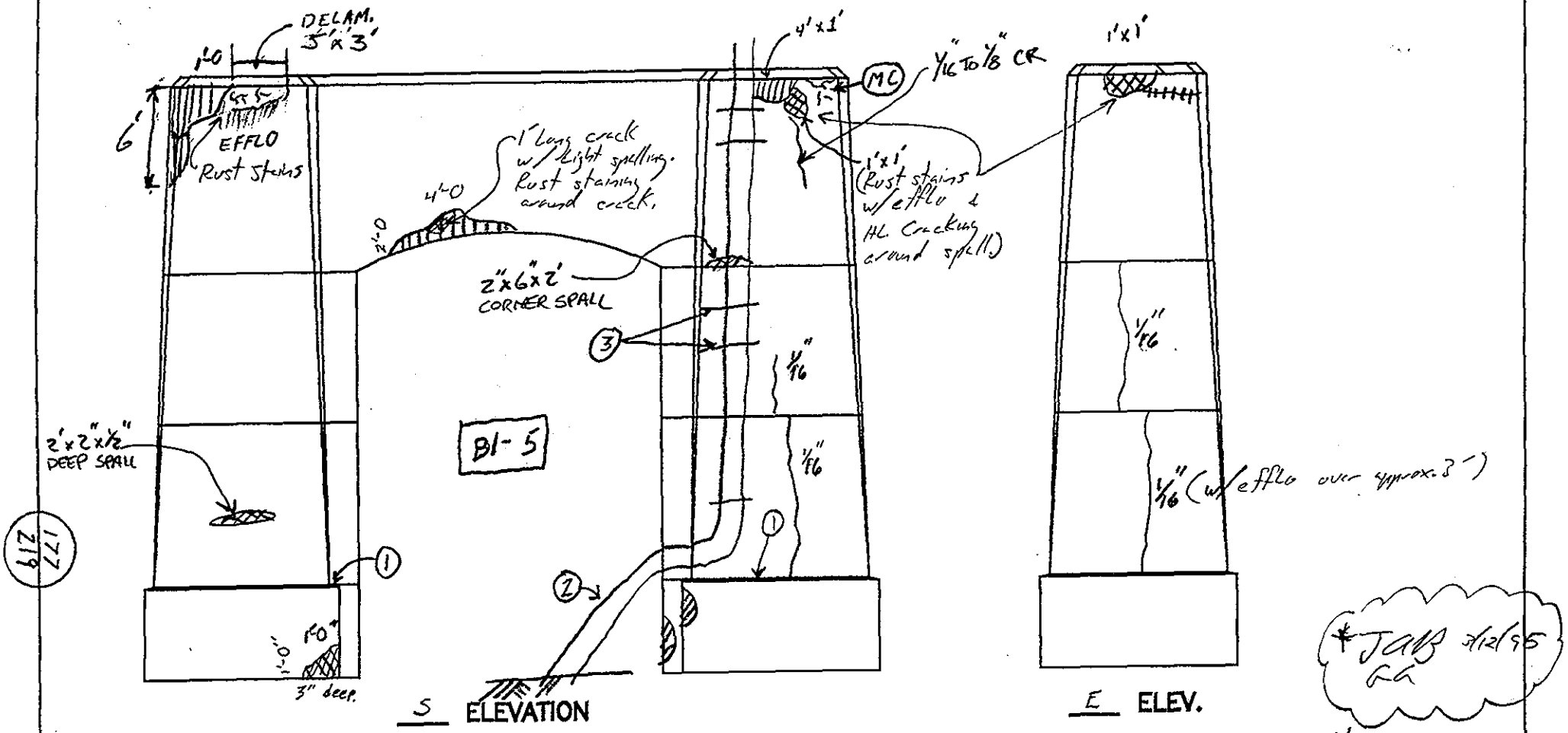

PIER 4

UPDATED 3/22/96 GG

NOTES:
- PATCH
- SPALL
- ① SCUPPER DRAINING ONTO FTG.
- ② 10½" Ø PIPE
- MC MAP CR
- ③ SUPP. BRKT IN CONC.
- SEALED CR

Generally, Patches are in fair to poor condition showing deterioration in the form of cracking, light spalling & rust staining.

SUBSTRUCTURE	
DEPARTMENT OF THE ARMY NEW ENGLAND DIVISION CORPS OF ENGINEERS	
BOURNE HIGHWAY BRIDGE ROUTINE INSPECTION	
NOTES BY: LICHTENSTEIN CONSULTING ENGINEERS	
JOB #1784	DATE: 3/4/96
CREW: TF/CL	SHEET 4 OF 4

178
219

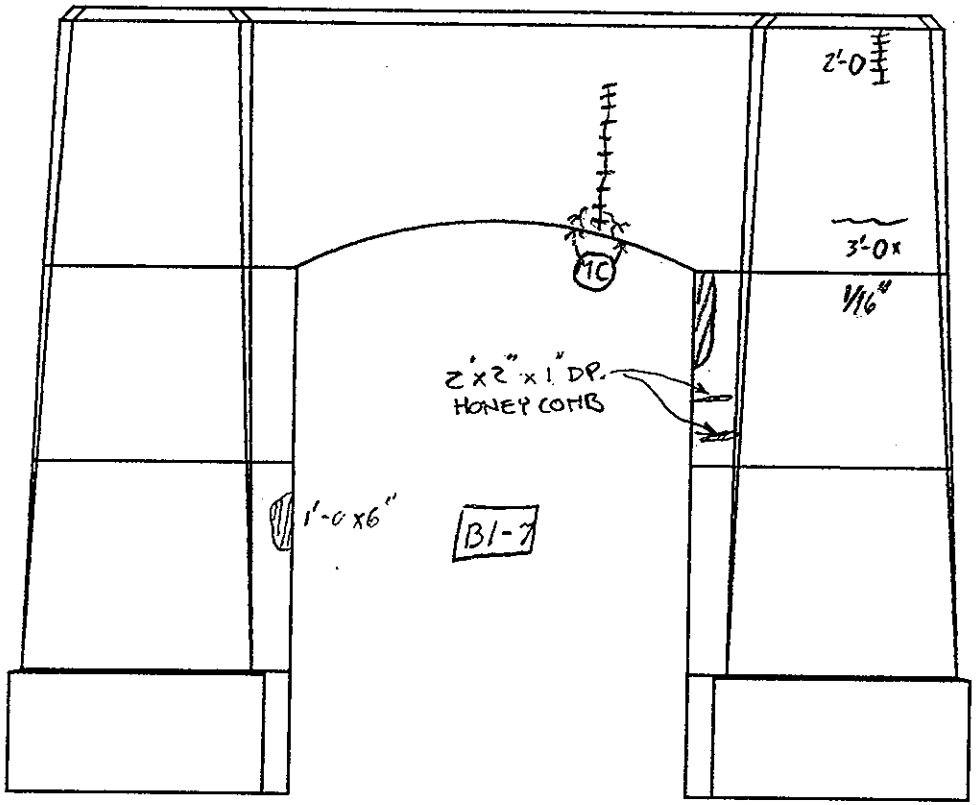

N ELEVATION

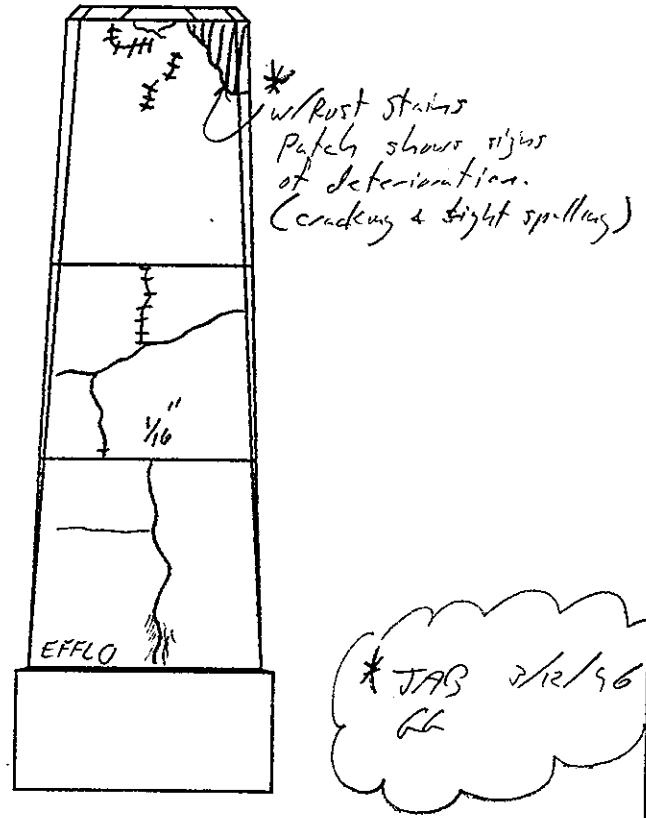

W ELEV.

PIER 4

NOTES: PATCH
MO MAP CR

SUBSTRUCTURE

DEPARTMENT OF THE ARMY
NEW ENGLAND DIVISION CORPS OF ENGINEERS

BOURNE HIGHWAY BRIDGE
ROUTINE INSPECTION

NOTES BY: LICHTENSTEIN
CONSULTING ENGINEERS

JOB #1784	DATE: 3·4·96
CREW: TF, EL	SHEET 3 OF 4

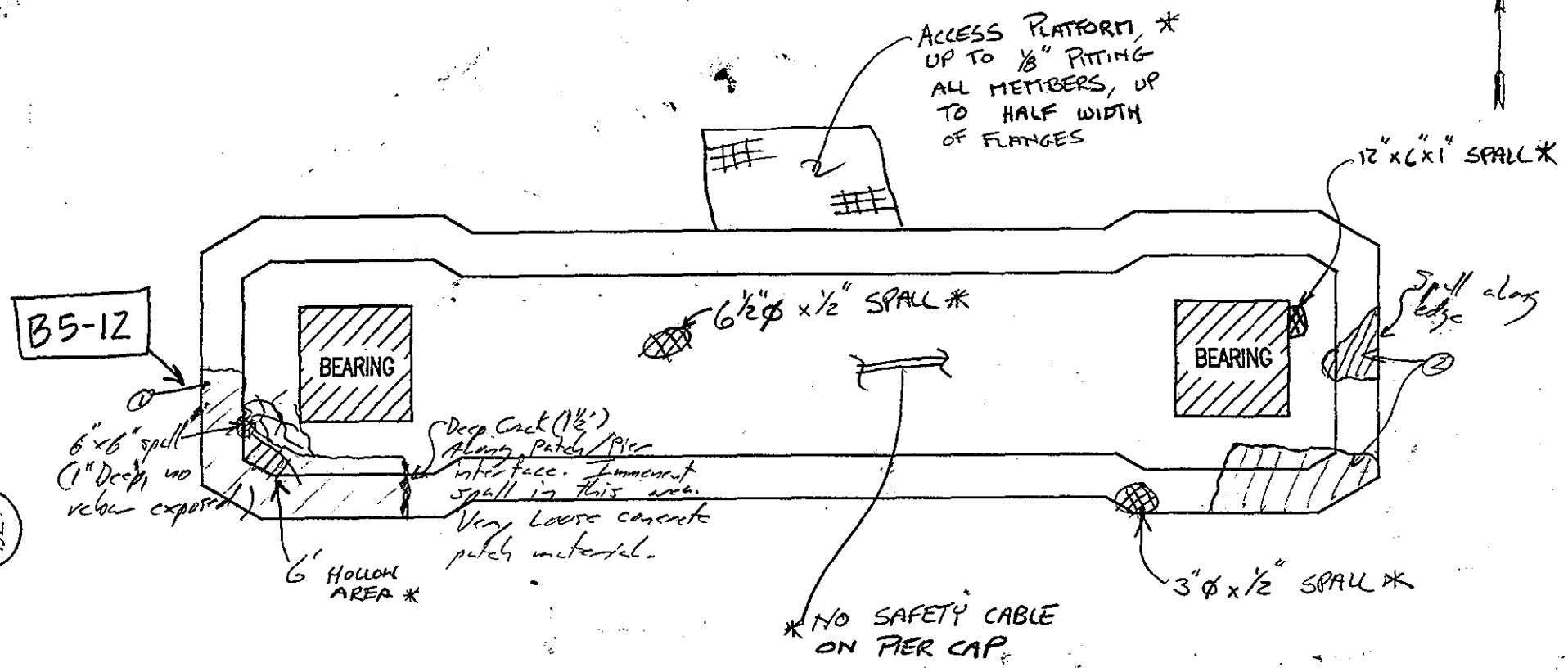

NOTES: ① Cracked and delaminated Patch.
② Patches have failed. Heavy delaminations and immenent spalls present. Cracking around patch material.

TOP OF PIER	
DEPARTMENT OF THE ARMY NEW ENGLAND DIVISION CORPS OF ENGINEERS	
BOURNE HIGHWAY BRIDGE ROUTINE INSPECTION	
NOTES BY: LICHTENSTEIN CONSULTING ENGINEERS	
JOB #1784	DATE: 3/12/96
CREW: JB/GG	SHEET 2 OF 5

179
219

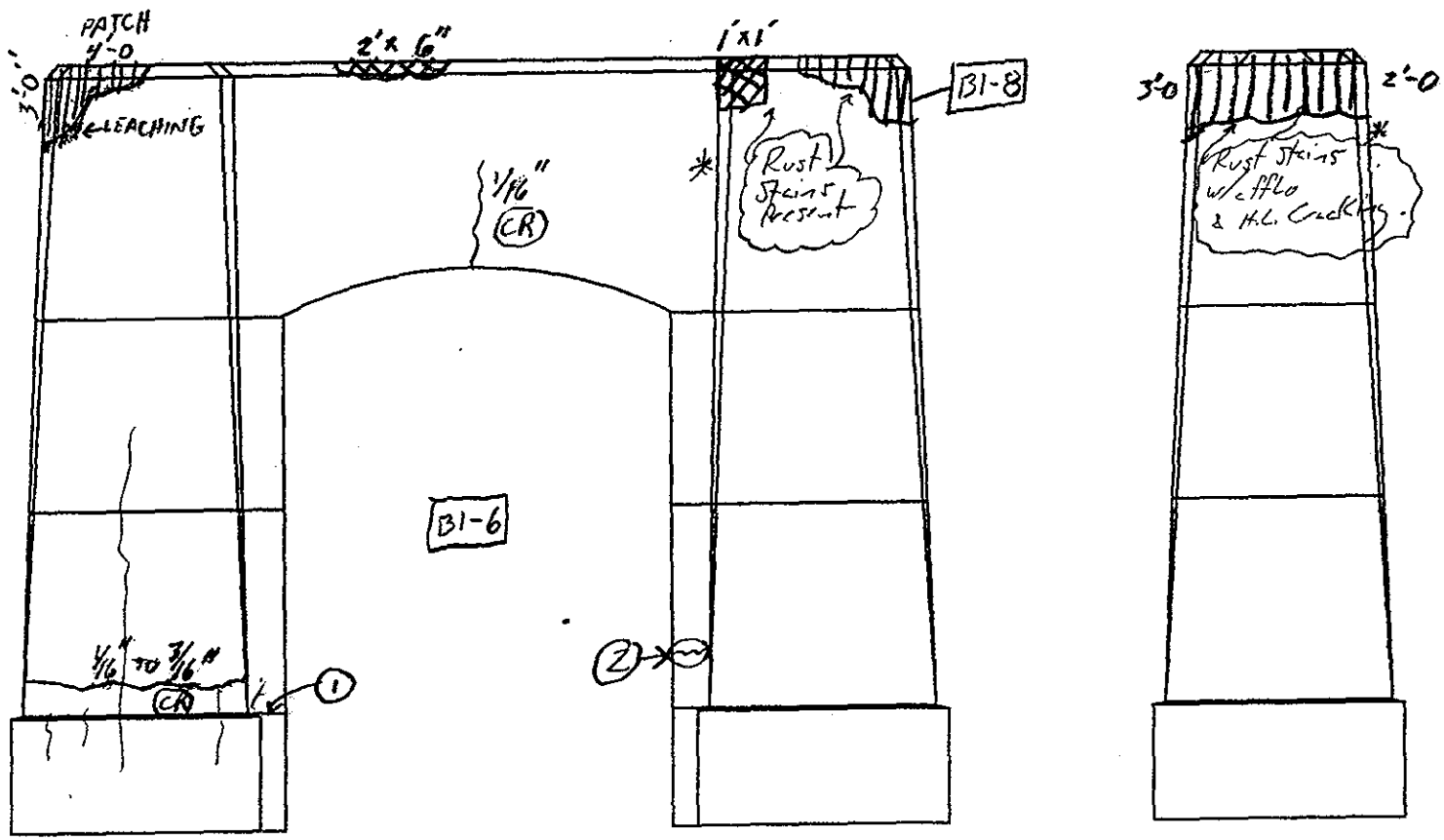

S ELEVATION

E ELEV.

* JAB 3/12/96

PIER 6

NOTES:

- PATCH
- SPALL
- CR - CRACK
- 1 - SCUPPER DRAINING ONTO FTG.
- 2 - SEALED CR 1'-0 x 1/4"

SUBSTRUCTURE

DEPARTMENT OF THE ARMY
NEW ENGLAND DIVISION CORPS OF ENGINEERS

BOURNE HIGHWAY BRIDGE
ROUTINE INSPECTION

NOTES BY: LICHTENSTEIN CONSULTING ENGINEERS

JOB #1784	DATE: 3/4/96
CREW: TF/EL	SHEET 1 OF 4

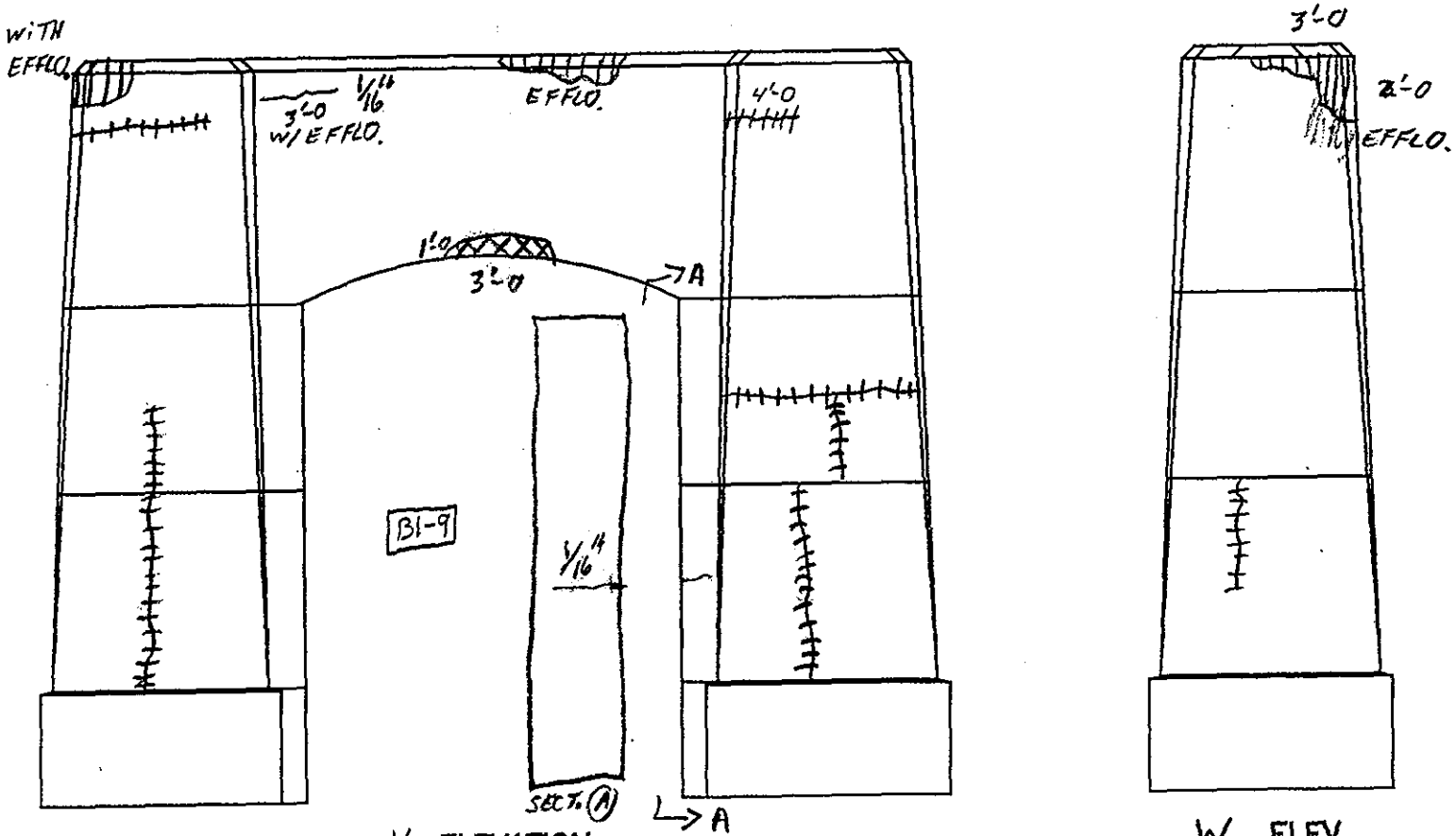

N ELEVATION

W ELEV.

PIER 6

NOTES: ▥ - PATCH
HHHHHH - SEALED (CR)
⊠ - SPALL

SUBSTRUCTURE	
DEPARTMENT OF THE ARMY NEW ENGLAND DIVISION CORPS OF ENGINEERS	
BOURNE HIGHWAY BRIDGE ROUTINE INSPECTION	
NOTES BY: LICHTENSTEIN CONSULTING ENGINEERS	
JOB #1784	DATE: 3/4/96
CREW: TF/EL	SHEET 2 OF 4

181
219

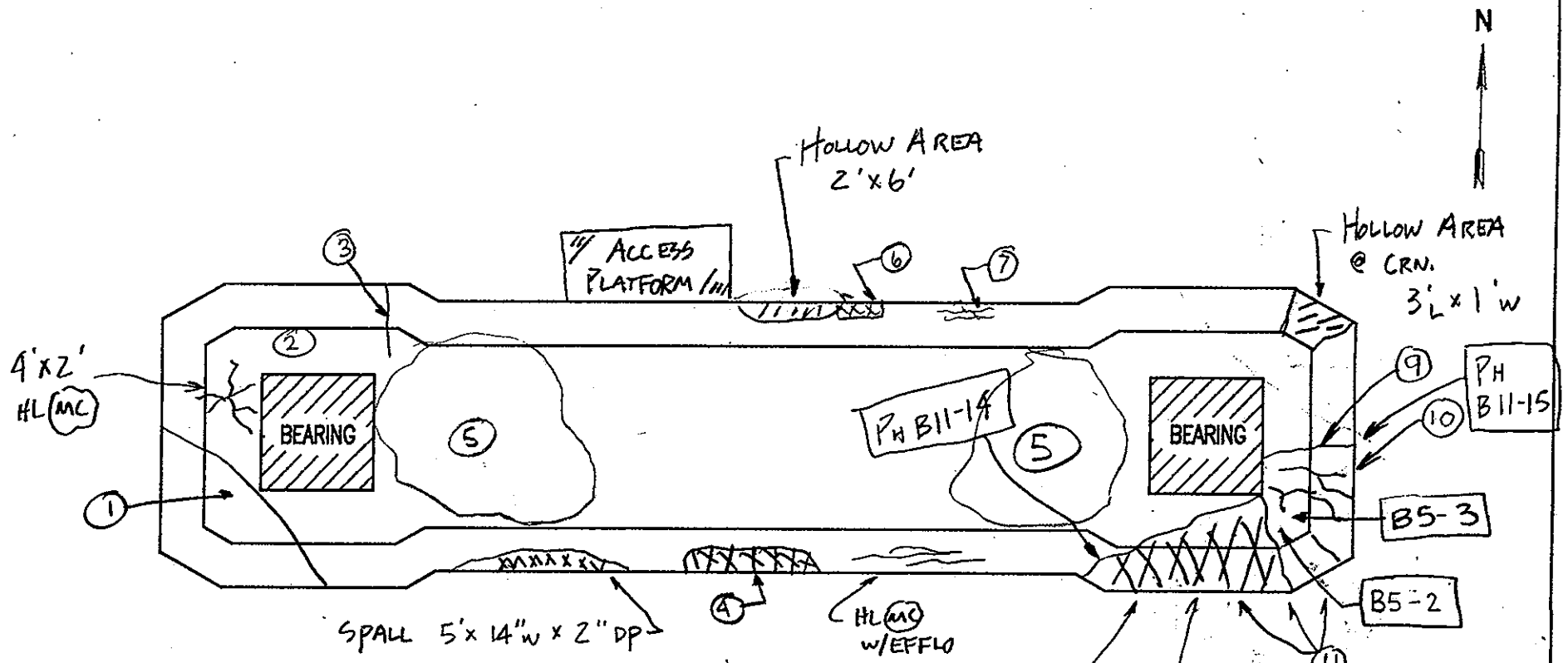

(9) Entire Area Contains Map Cracking & Delamination

(10) S.W. Corner Patch Failed Delam. w/up to 1/16" (MC) - Imminent Spall!

(11) Failed Repair Patch

PIER 6

NOTES: ☆ No Cable Btwn. Trusses!

1. Repair Patch
2. Exposed Aggregate
3. Hair line Crack
4. 2' x Up to 6" x 2" Dp Spall
5. 10' x Full Pier Width Water Stain
6. Corner Spall 18"L x 9"W x 2"DP
7. Hairline Cracks
8. Spall 6'L x 27"W x 4"DP Entire S. Face of Chamfer

TOP OF PIER	
DEPARTMENT OF THE ARMY NEW ENGLAND DIVISION CORPS OF ENGINEERS	
BOURNE HIGHWAY BRIDGE ROUTINE INSPECTION	
NOTES BY: LICHTENSTEIN CONSULTING ENGINEERS	
JOB #1784	DATE: 3/11/96
CREW: SD, WM, G²	SHEET 8 OF 8

182
219

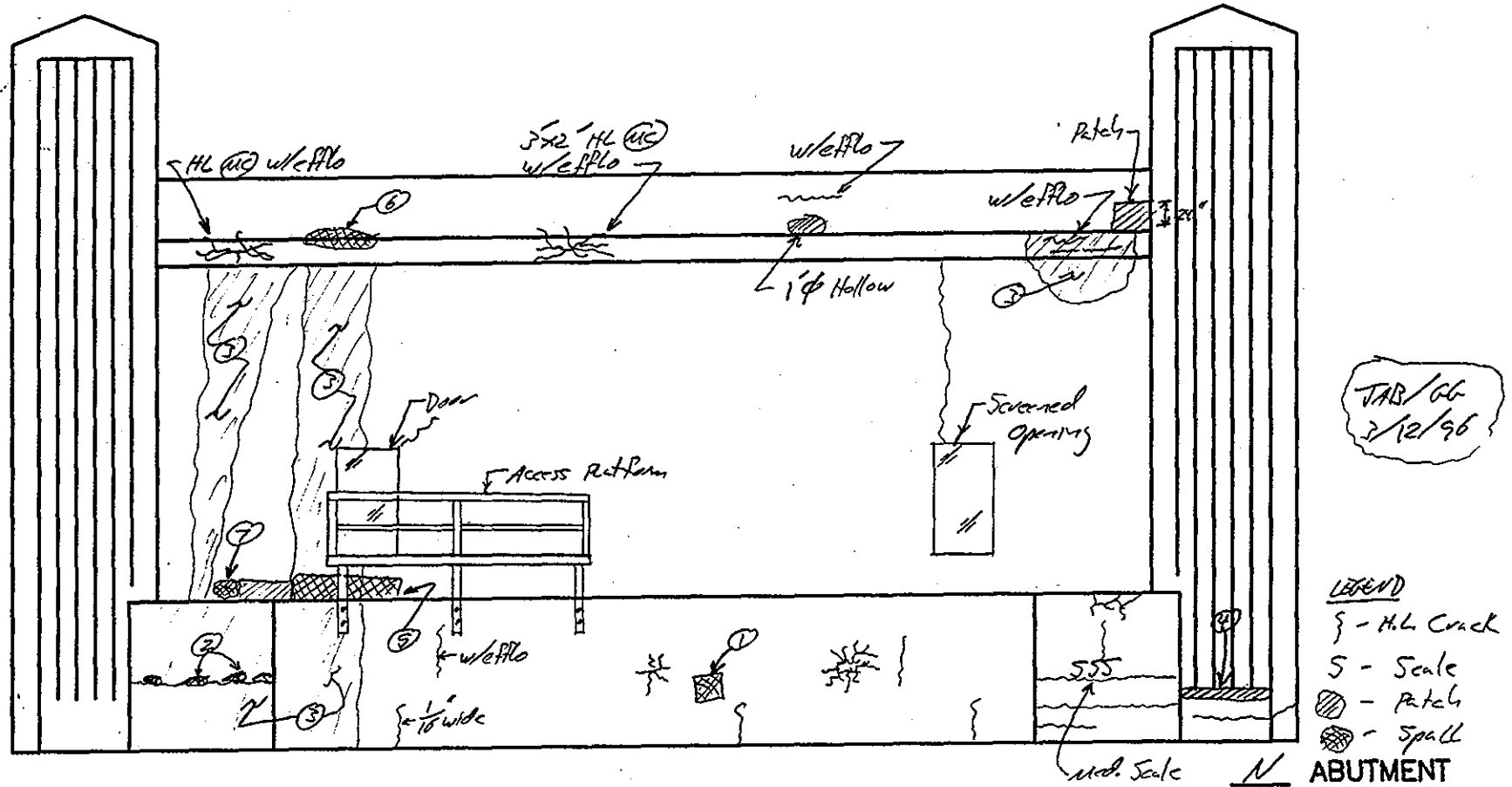

TAB/GG 3/12/96

PHOTOS: 07-4, 5, 6 & 7

NOTES: ① 3½"×5"×1" deep spall
② Light surface spalls @ const. joint.
③ Wet surface due to leaking joint above. Overall, surface appears in good condition w/ light to moderate scale & exposed aggregate.
④ Patch in sound condition.
⑤ Corner spall at door, 4'L×16"H×12" deep.
⑥ 2'×1'×3" deep corner spall w/ efflorescence.
⑦ 1'φ×2" deep spall. Also, 4'×2' hollow area adjacent to spalling.

SUBSTRUCTURE

DEPARTMENT OF THE ARMY
NEW ENGLAND DIVISION CORPS OF ENGINEERS

BOURNE HIGHWAY BRIDGE
ROUTINE INSPECTION

NOTES BY: LICHTENSTEIN
CONSULTING ENGINEERS

JOB #1784 | DATE: 3/5/96
CREW: PWN/WM | SHEET 3 OF 15

183
219

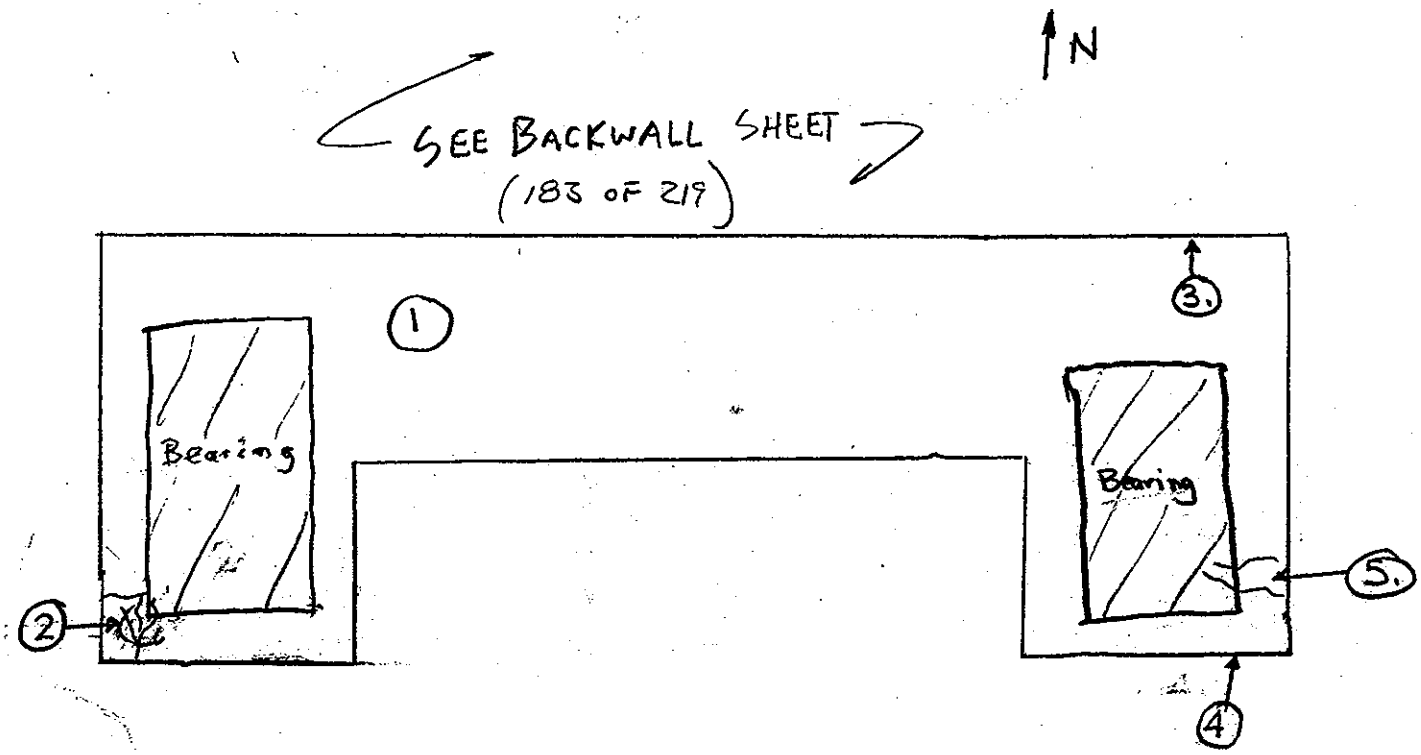

PLAN
NORTH ABUT. SEAT

NOTES:

1. Debris From Spalls on Backwall. See Backwall Sheet.
2. Hair Line Cracks
3. Debris From Spall on Backwall. See Backwall Sheet
4. 6" x 4" x 1" Deep Corner Spall
5. Hairline Cracks

DEPARTMENT OF THE ARMY NEW ENGLAND DIVISION CORPS OF ENGINEERS	
BOURNE HIGHWAY BRIDGE ROUTINE INSPECTION	
NOTES BY: LICHTENSTEIN CONSULTING ENGINEERS	
JOB #1784	DATE: 3/11/96
CREW: SD, WM	SHEET 1 OF 8

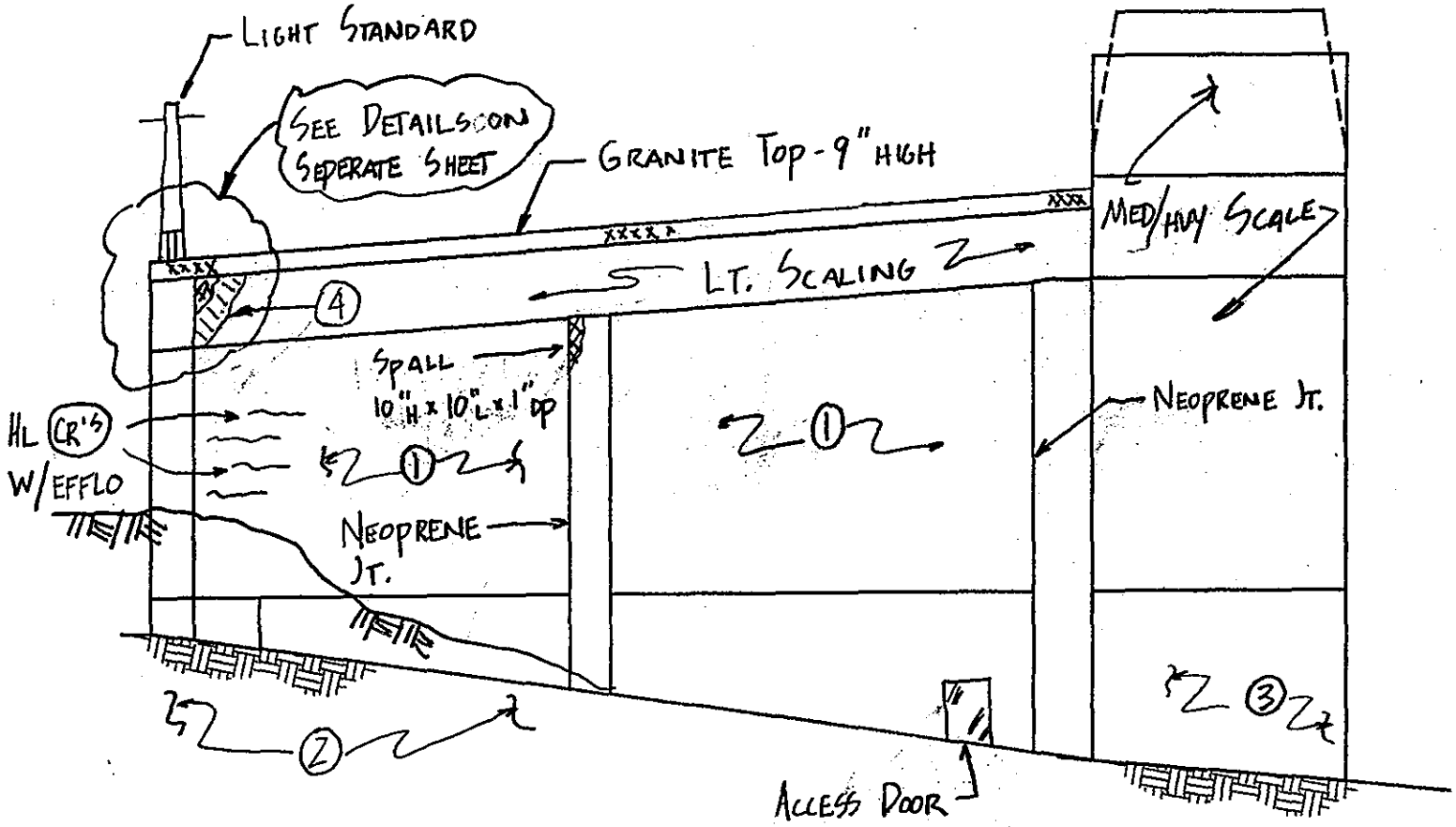

N ABUTMENT
W ELEVATION

NOTES:

1. LT TO MED. SCALE TYP. ALL SURFACES
2. VEGETATION & BRUSH GROWING NEXT TO WINGWALL
3. HEAVY SCALE
4. 6" ϕ SPALL W/ 30" x 18" HOLLOW AREA

SUBSTRUCTURE

DEPARTMENT OF THE ARMY
NEW ENGLAND DIVISION CORPS OF ENGINEERS

BOURNE HIGHWAY BRIDGE
ROUTINE INSPECTION

NOTES BY: LICHTENSTEIN
CONSULTING ENGINEERS

JOB #1784	DATE: 3/5/96
CREW: WM, PWN	SHEET 2 OF 15

185
219

NOTE: 10% OF SURFACE EXHIBITS LIGHT SCALE

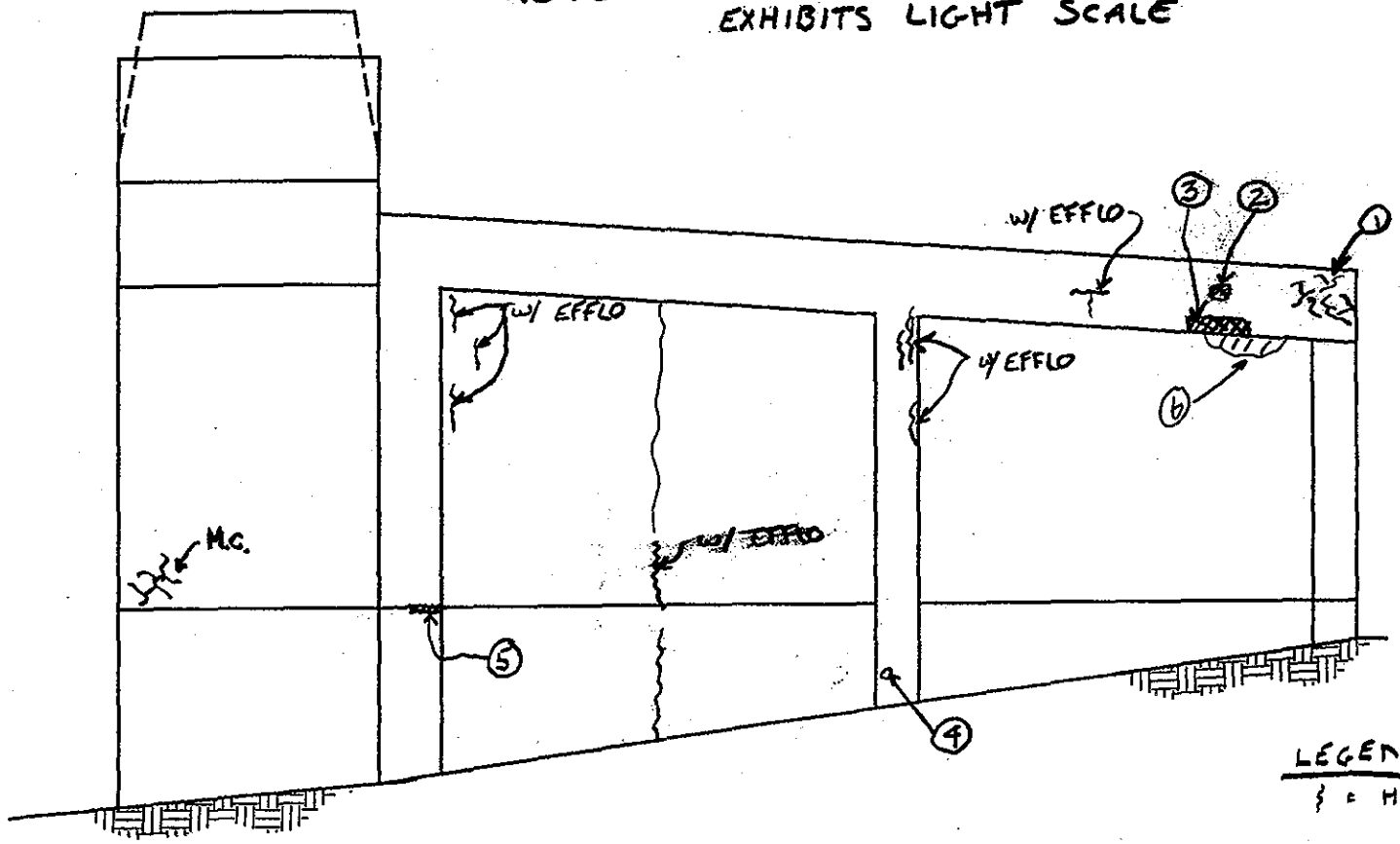

LEGEND
{ = H.L. CRACK

N ABUTMENT
E ELEVATION

NOTES:
1. 6'x6' AREA, MAPCRACKING w/ EFFLO (TIGHT)
2. 10" ø x 3/4" DEEP SPALL w/ EXP. REINF. + EFFLO
3. 4" x 5" x 4' LONG CORNER SPALL w/ EXP. REINF.
4. 1" ø POPOUT w/ EXP. REINF.
5. 1" x 1" x 8" LONG CORNER SPALL
6. HOLLOW AREA 18"L x 6" ON CORNER W 1/8" (CR) & EFFLO

(REVISED 3/22/96 WM, GG)

SUBSTRUCTURE	
DEPARTMENT OF THE ARMY NEW ENGLAND DIVISION CORPS OF ENGINEERS	
BOURNE HIGHWAY BRIDGE ROUTINE INSPECTION	
NOTES BY: LICHTENSTEIN CONSULTING ENGINEERS	
JOB #1784	DATE: 3/5/96
CREW: PWN WM	SHEET 1 OF 15

186
219

FIELD NOTES

	JOB NO. 1784	BRIDGE NO. BOURNE
	DATE 3/5/96	SHEET 15/15
PREPARED BY: A.G. LICHTENSTEIN	CREW PWH WM	

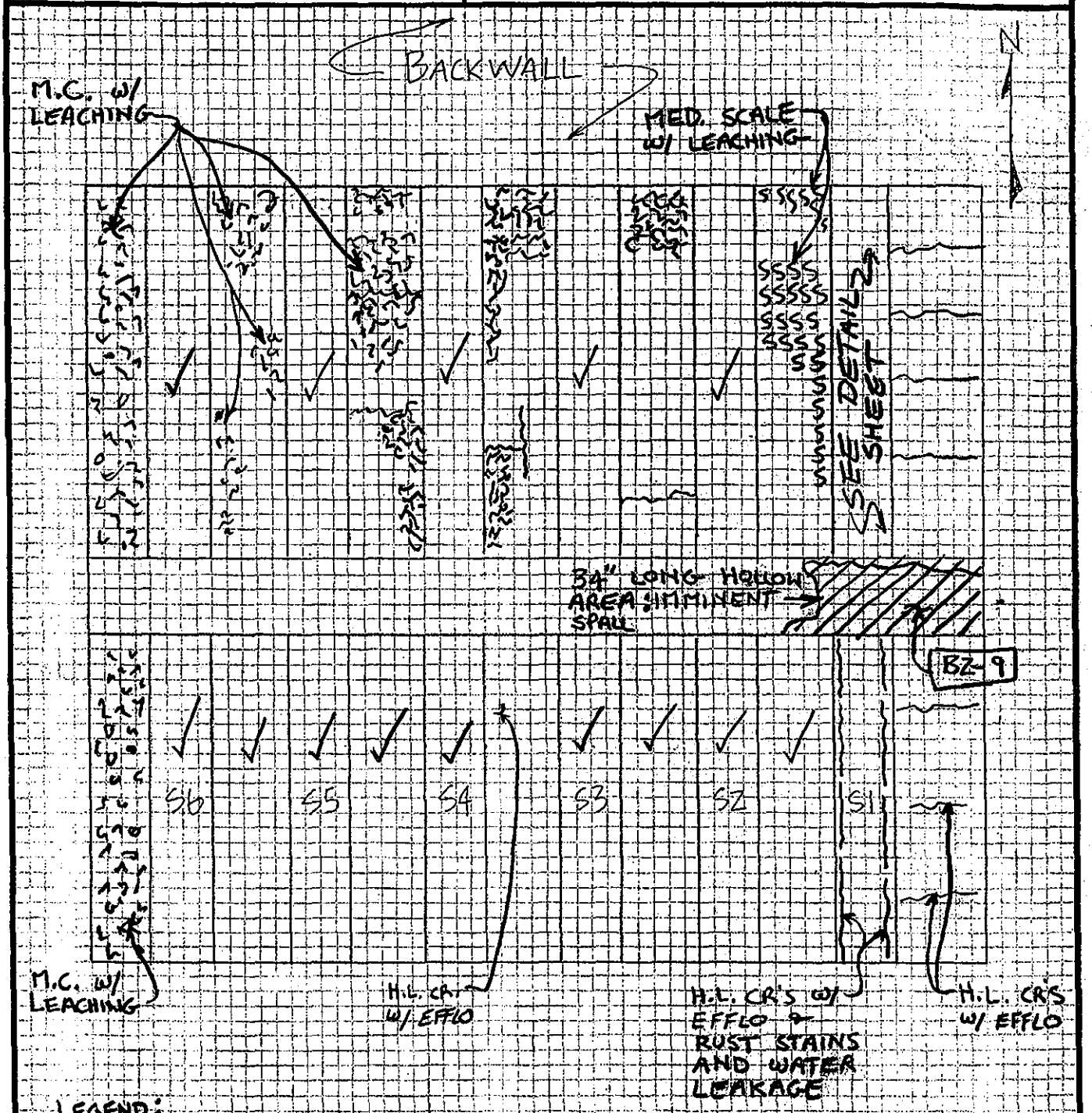

LEGEND:

- H.L. MAPCRACKING w/ LEACHING
- H.L. CRACK w/ EFFLO

N. ABUT - CHAMBER 1

UNDERSIDE OF DECK

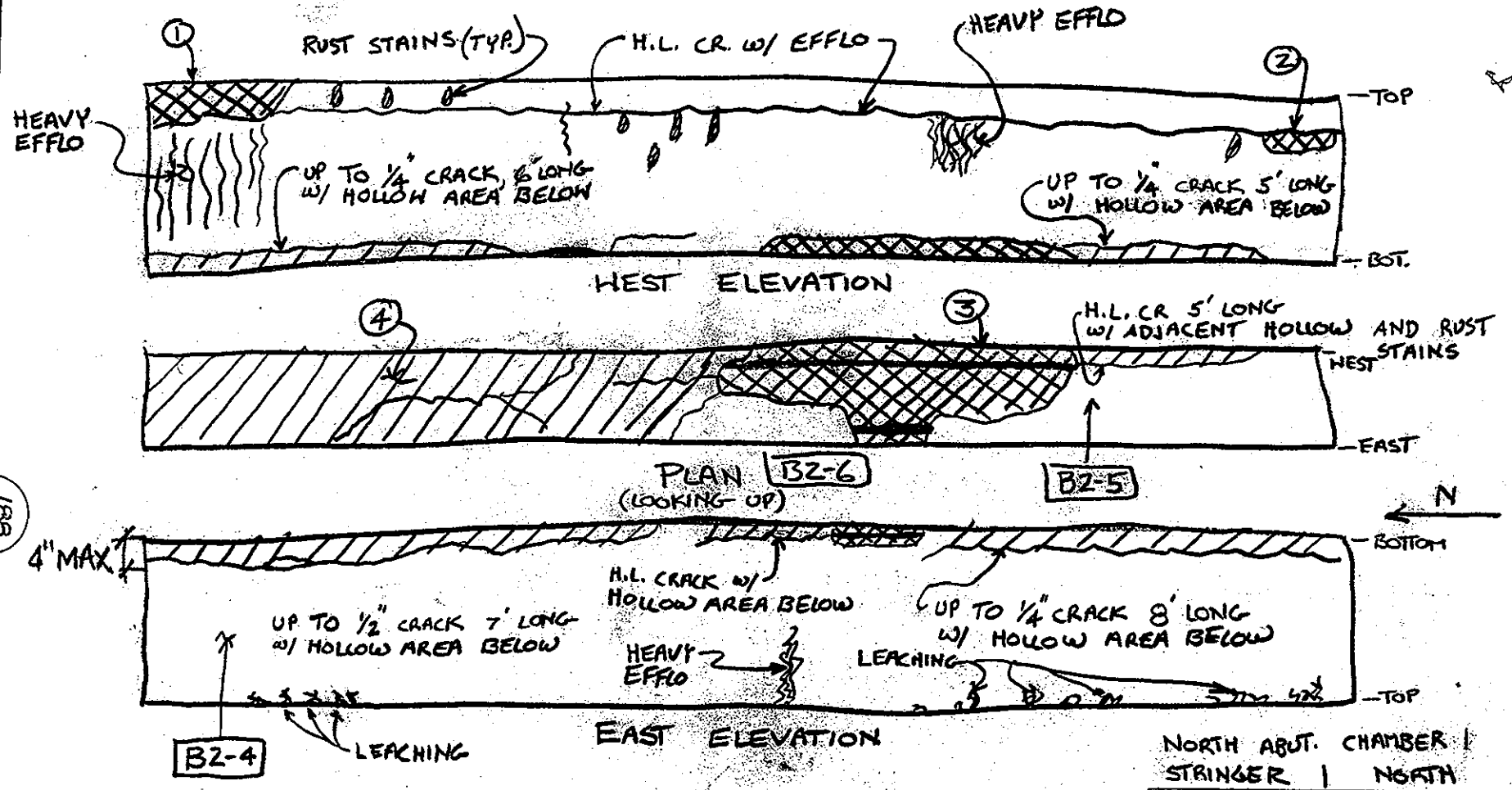

NOTES: ① 8" x 3' x 1½" SPALL W/ EXP. REINF.
② 3' x 1' x 1½" SPALL W/ EXP. REINF.
③ 85" LONG x 1' WIDE x 2" DEEP SPALL W/ EXP. REINF.
STEEL EXHIBITS UP TO 50% LOSS IN SOME AREAS
④ 11'-8" x FULL WIDTH HOLLOW AREA W/ RUST STAINS + EFFLO

DEPARTMENT OF THE ARMY NEW ENGLAND DIVISION CORPS OF ENGINEERS	
BOURNE HIGHWAY BRIDGE ROUTINE INSPECTION	
NOTES BY: LICHTENSTEIN CONSULTING ENGINEERS	
JOB #1784	DATE: 3/5/96
CREW: P. WN WM	SHEET 11 OF 15

188
219

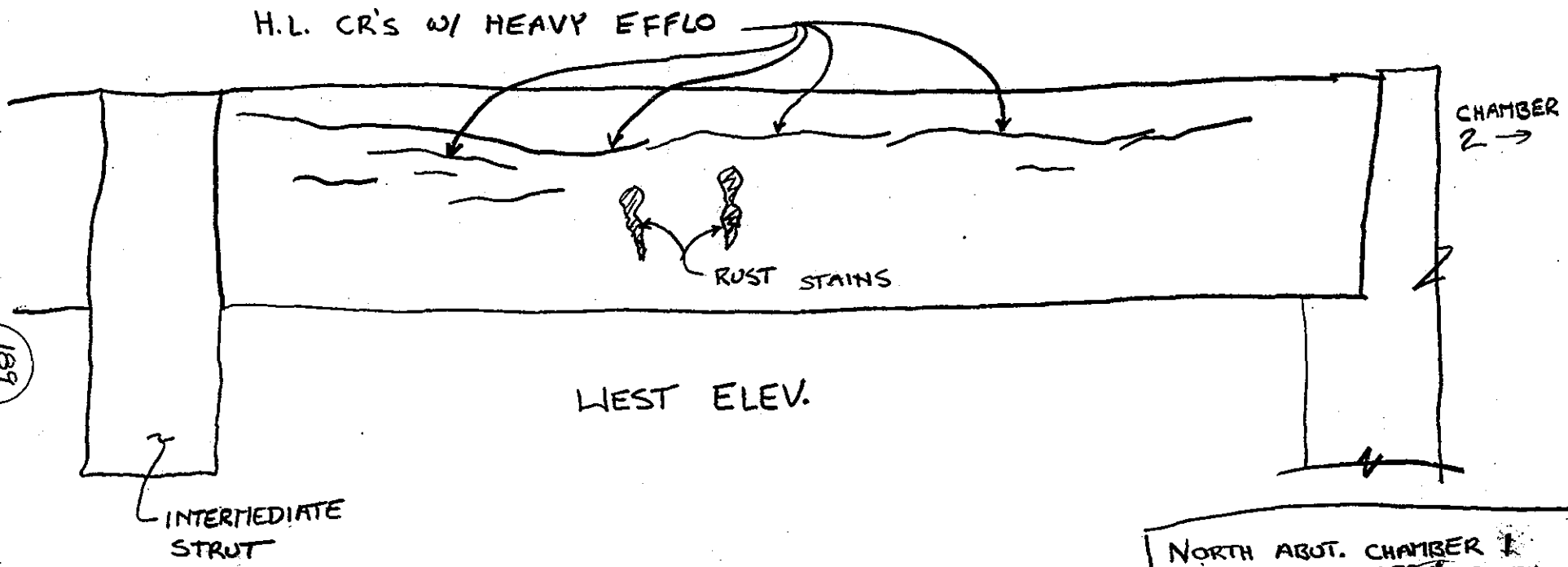

NORTH ABUT. CHAMBER 1
W. ELEV. STRINGER 1 SOUTH
CONCRETE T-BEAM

NOTES:

DEPARTMENT OF THE ARMY
NEW ENGLAND DIVISION CORPS OF ENGINEERS

BOURNE HIGHWAY BRIDGE
ROUTINE INSPECTION

NOTES BY: LICHTENSTEIN
CONSULTING ENGINEERS

JOB #1784 | DATE: 3/5/96
CREW: PWN WA | SHEET 12 OF 15

FIELD NOTES

	JOB NO. 1784 #6	BRIDGE NO. BOURNE
	DATE 3.5.96	SHEET 1 OF 1
PREPARED BY: A.G. LICHTENSTEIN	CREW PN, EL	

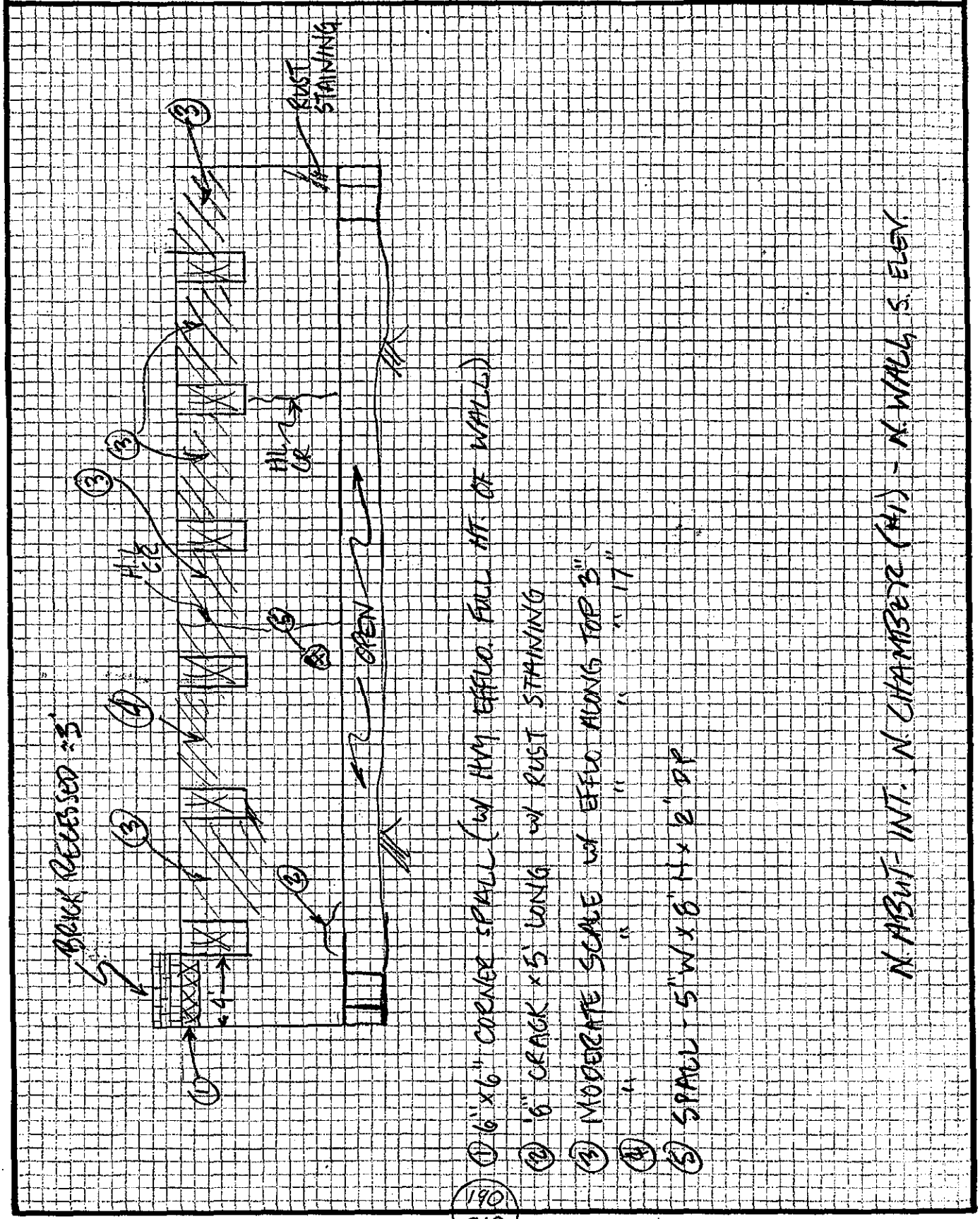

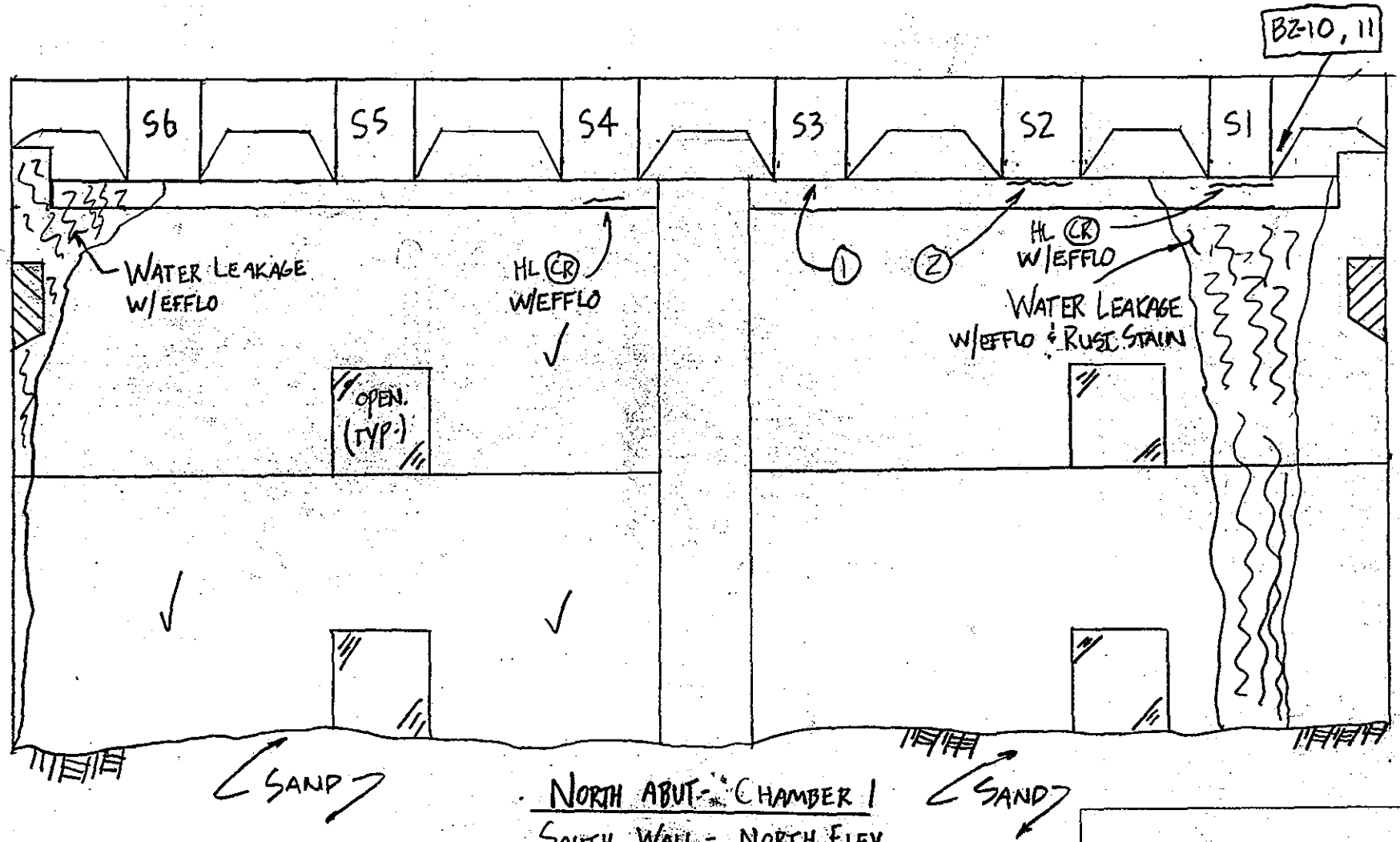

NORTH ABUT. CHAMBER 1
SOUTH WALL - NORTH ELEV.

NOTES:

1. STEEL SHIMS UNDER STRINGERS CAUSING RUST STAIN TO BE PRESENT - TYP. ALL STR'S.
2. HL CR W/EFFLO ON FACE OF WALL - UNDER STRINGER - TYP. BZ-10, 11

DEPARTMENT OF THE ARMY
NEW ENGLAND DIVISION CORPS OF ENGINEERS

BOURNE HIGHWAY BRIDGE
ROUTINE INSPECTION

NOTES BY: LICHTENSTEIN
CONSULTING ENGINEERS

JOB #1784 | DATE: 3/5/96
CREW: WM, PWN | SHEET 10 OF 15

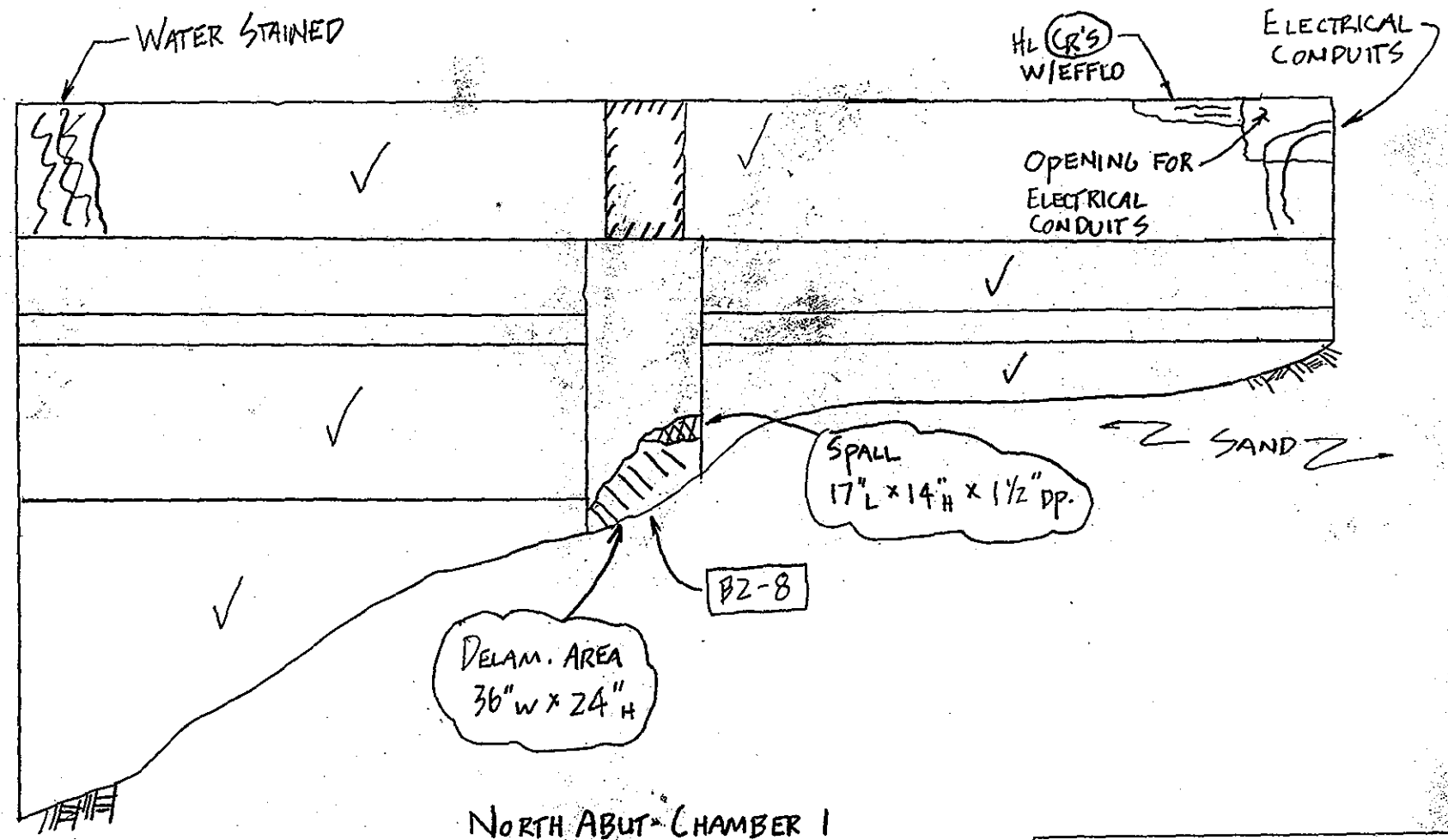

NORTH ABUT - CHAMBER 1
WEST WALL - EAST ELEV.

NOTES:

DEPARTMENT OF THE ARMY NEW ENGLAND DIVISION CORPS OF ENGINEERS	
BOURNE HIGHWAY BRIDGE ROUTINE INSPECTION	
NOTES BY: LICHTENSTEIN CONSULTING ENGINEERS	
JOB #1784	DATE: 3/5/96
CREW: WM, PWV	SHEET 13 OF 15

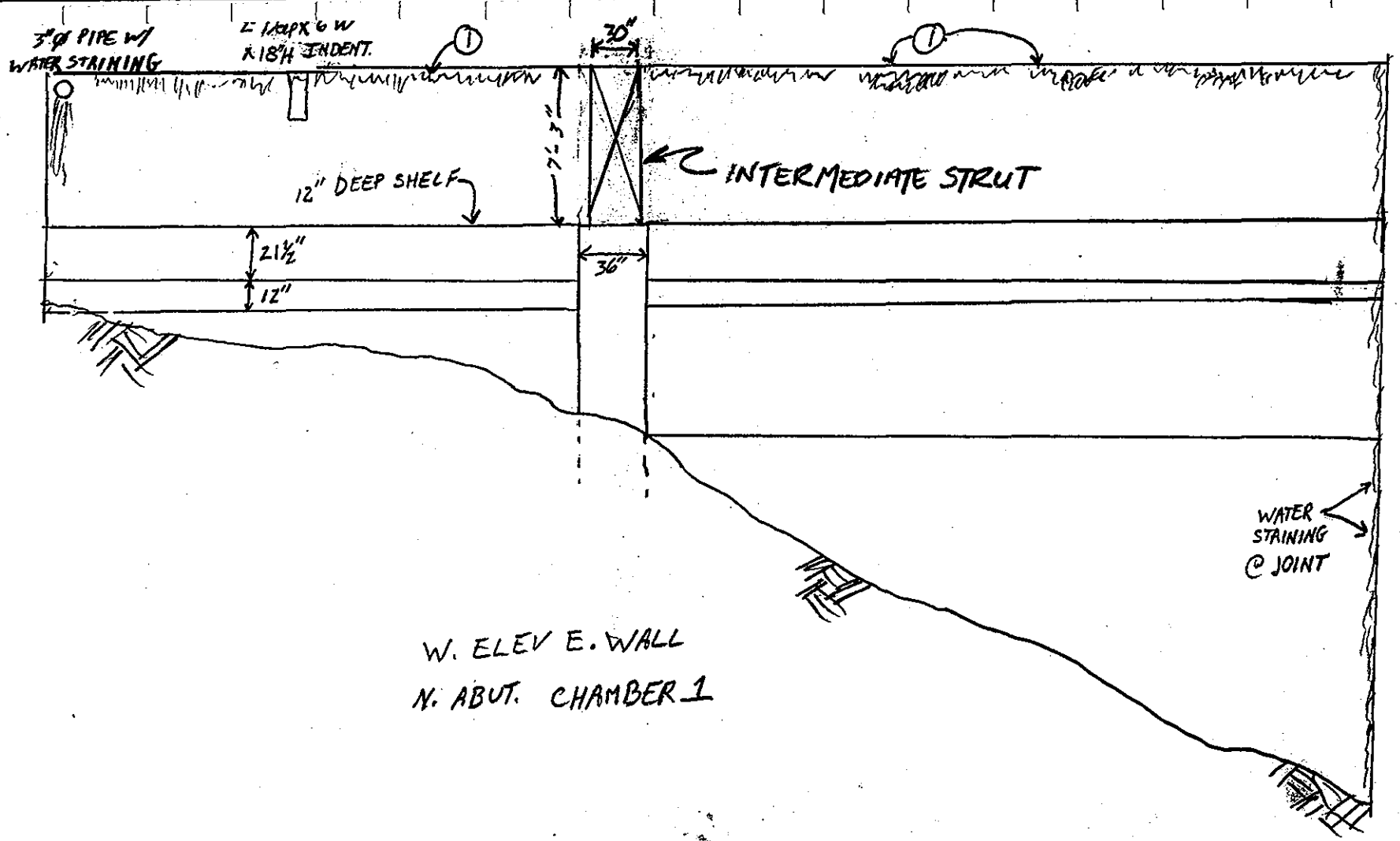

193
219

NOTES: ① 6" to 12" LEACHING ALONG TOP OF WALL FULL LENGTH.

DEPARTMENT OF THE ARMY NEW ENGLAND DIVISION CORPS OF ENGINEERS	
BOURNE HIGHWAY BRIDGE ROUTINE INSPECTION	
NOTES BY: LICHTENSTEIN CONSULTING ENGINEERS	
JOB #1784	DATE: 3/5/96
CREW: TF/EL	SHEET 5 OF 6

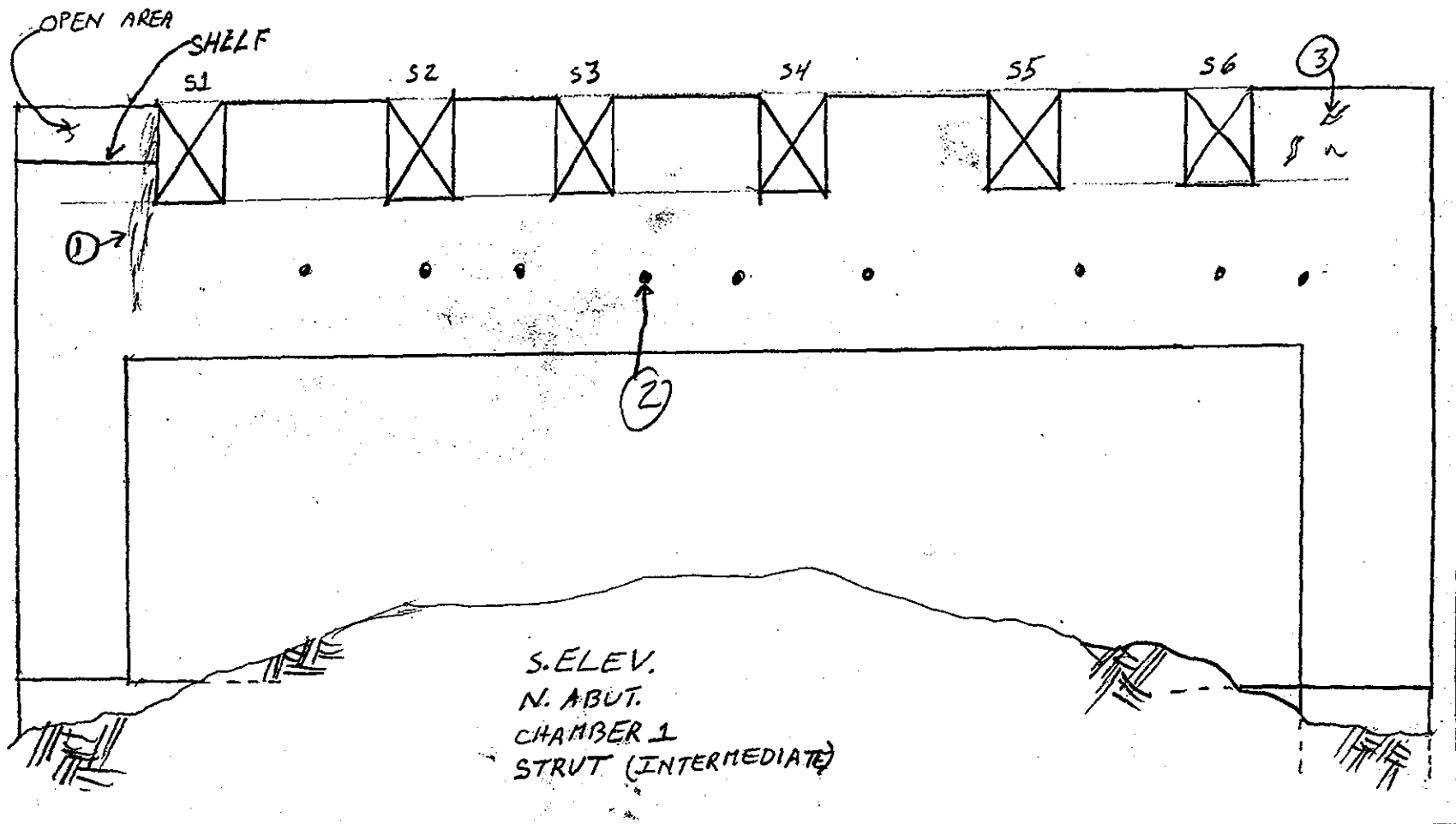

NOTES:

1. LEACHING UP TO 12" WIDE.
2. EXPOSED REBAR RUNNING ⊥ THRU STRUT. (TYP).
3. EXPOSED WIRE " " " "

DEPARTMENT OF THE ARMY NEW ENGLAND DIVISION CORPS OF ENGINEERS	
BOURNE HIGHWAY BRIDGE ROUTINE INSPECTION	
NOTES BY: LICHTENSTEIN CONSULTING ENGINEERS	
JOB #1784	DATE: 3/5/96
CREW: TF/EL	SHEET 6 OF 6

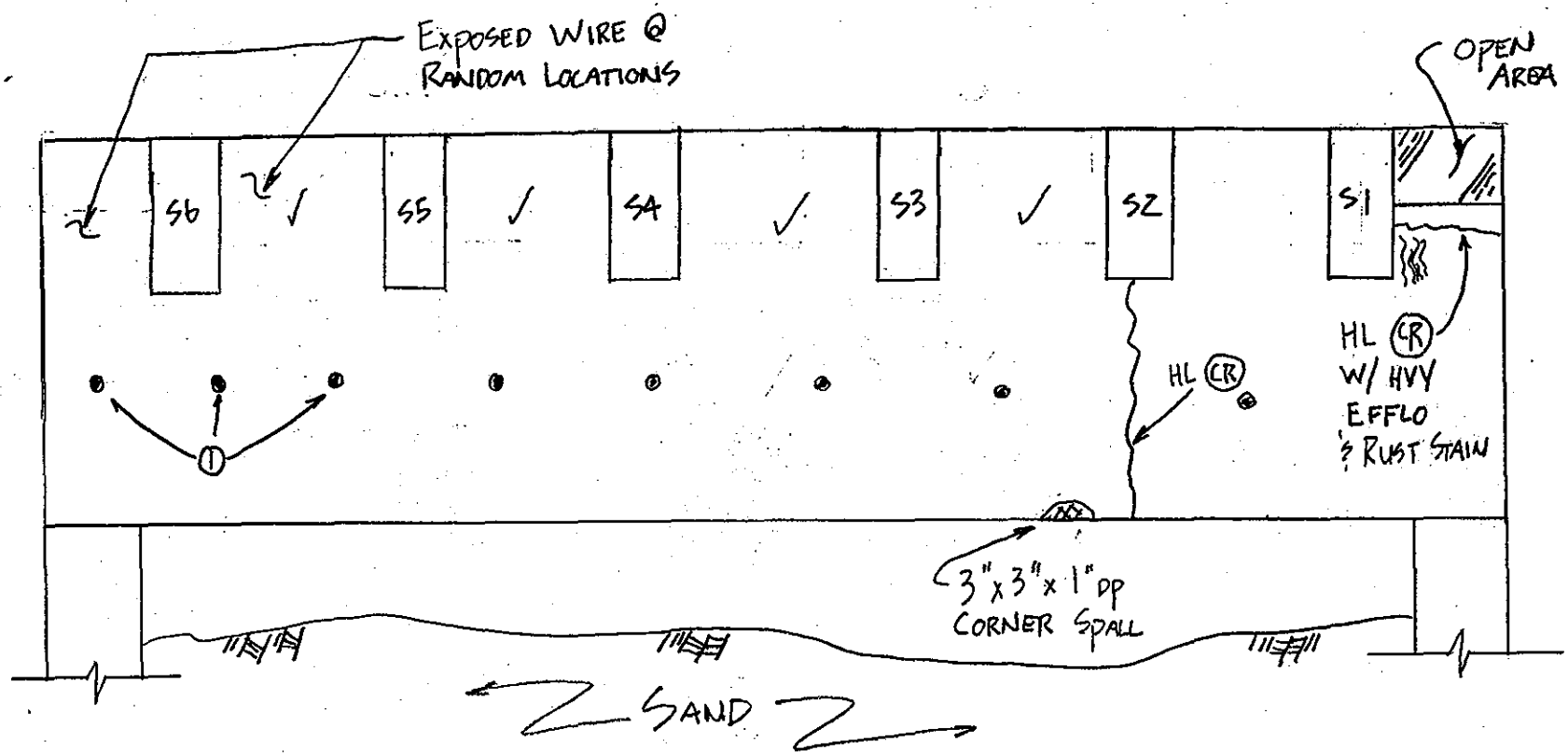

NORTH ABUT - CHAMBER 1

INTERMEDIATE STRUT - NORTH ELEV.

NOTES:

1. EXPOSED REBAR @ INTERMITTANT SPACINGS - FULL LENGTH OF STRUT

DEPARTMENT OF THE ARMY NEW ENGLAND DIVISION CORPS OF ENGINEERS	
BOURNE HIGHWAY BRIDGE ROUTINE INSPECTION	
NOTES BY: LICHTENSTEIN CONSULTING ENGINEERS	
JOB #1784	DATE: 3/5/96
CREW: WM, PWM	SHEET 14 OF 15

FIELD NOTES

	JOB NO. 1784	BRIDGE NO. BOURNE
	DATE 3/5/96	SHEET 9/15
PREPARED BY: A.G. LICHTENSTEIN	CREW PWN WM	

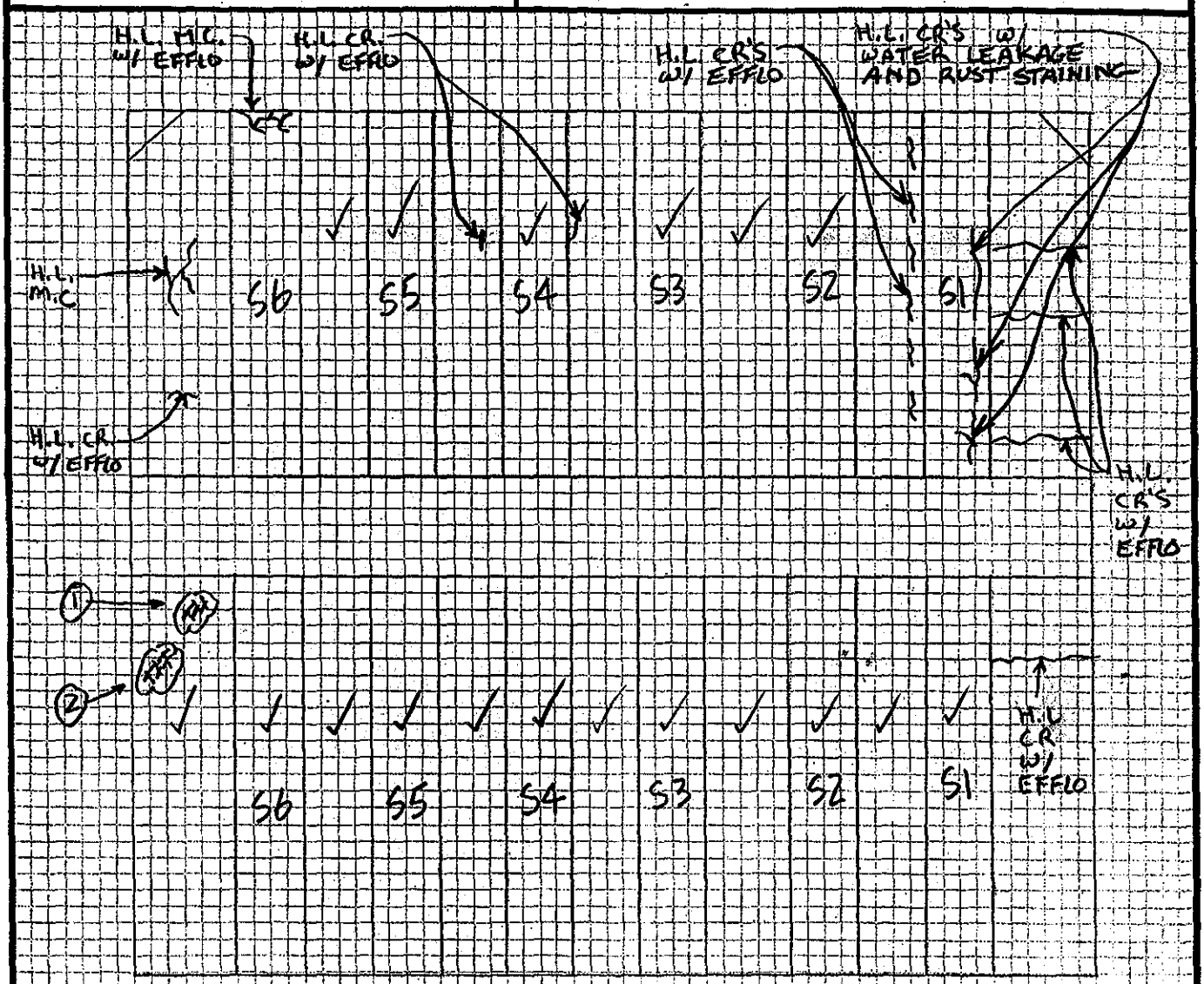

* 1 SPALL 2' Φ x 1" DP

* 2 SPALL 1' Φ x 1" DP

* (3/22/96 WM, GG)

N

PLAN VIEW (VIEW LOOKING UP)

NORTH ABUT.

CHAMBER 2 - MIDDLE

FIELD NOTES

	JOB NO. 1784	BRIDGE NO. BOURNE
	DATE 3/5/96	SHEET 4/15
PREPARED BY: A.G. LICHTENSTEIN	CREW PWN WM	

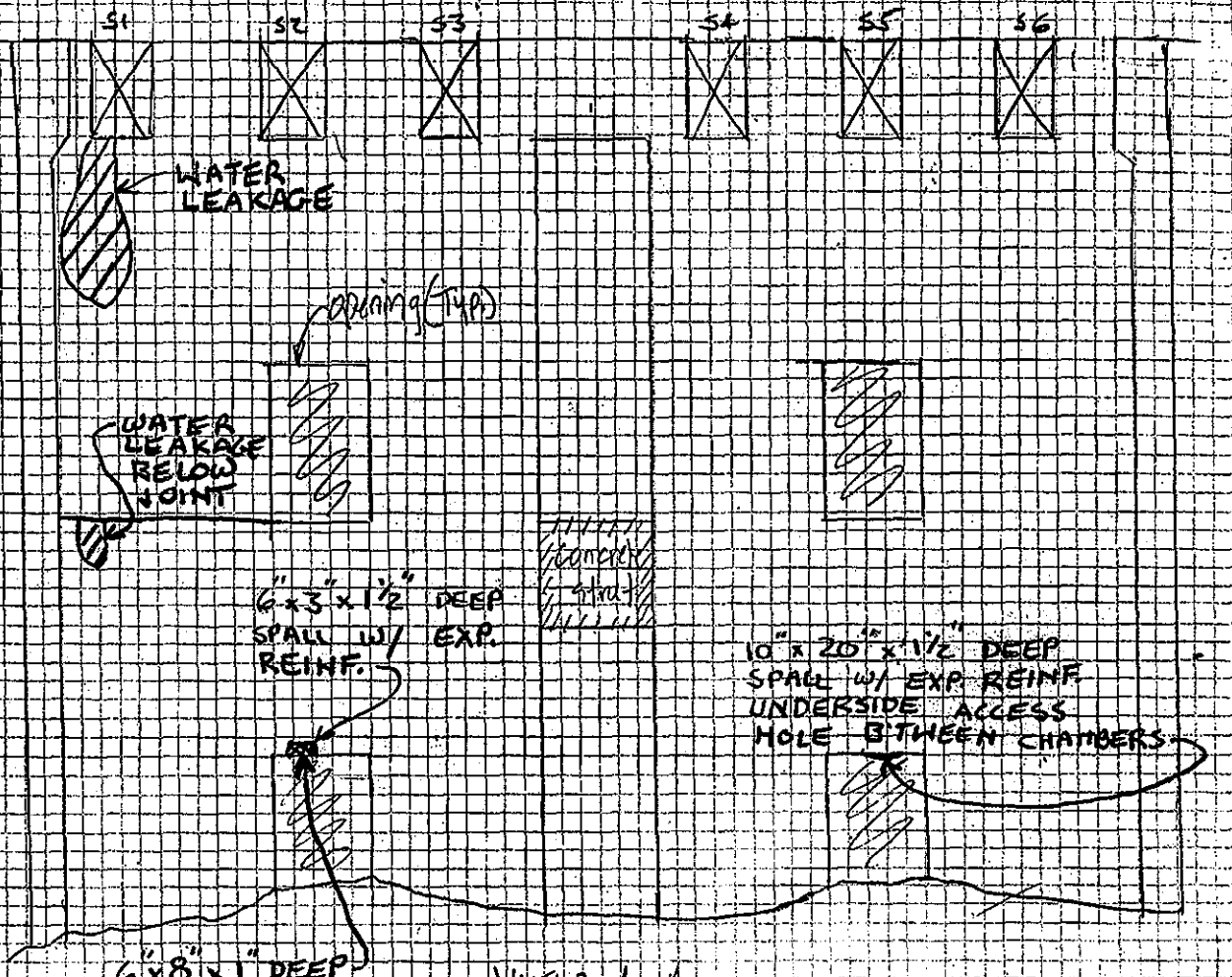

VIEW A-A

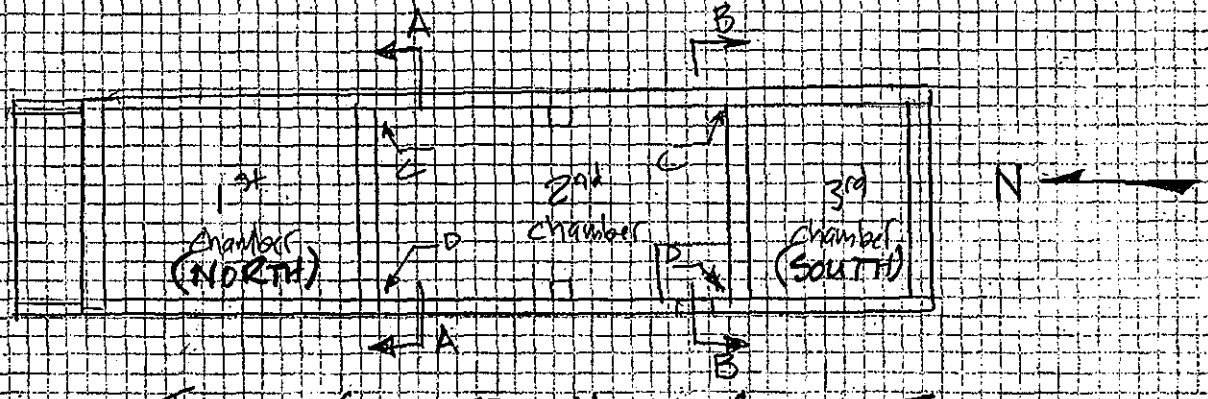

TRIPLE CHAMBER - NORTH ABUTMENT
PLAN VIEW

FIELD NOTES

	JOB NO. 1784	BRIDGE NO. BOURNE
	DATE 3/5/96	SHEET 5/16
PREPARED BY: A.G. LICHTENSTEIN	CREW PWN WM	

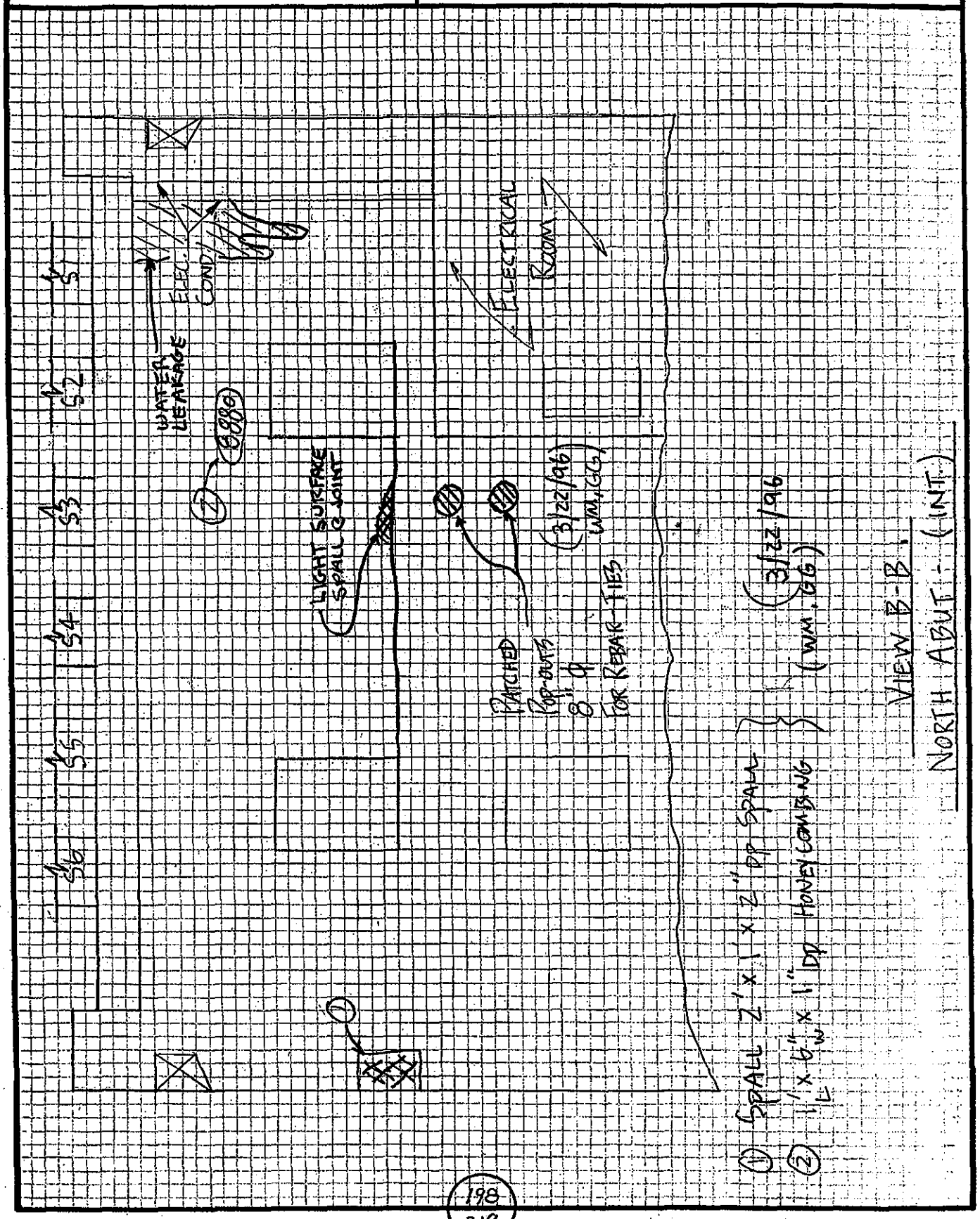

FIELD NOTES

	JOB NO. 1784	BRIDGE NO. BOURNE
	DATE 3/5/96	SHEET 6/15
PREPARED BY: A.G. LICHTENSTEIN	CREW PWN WM	

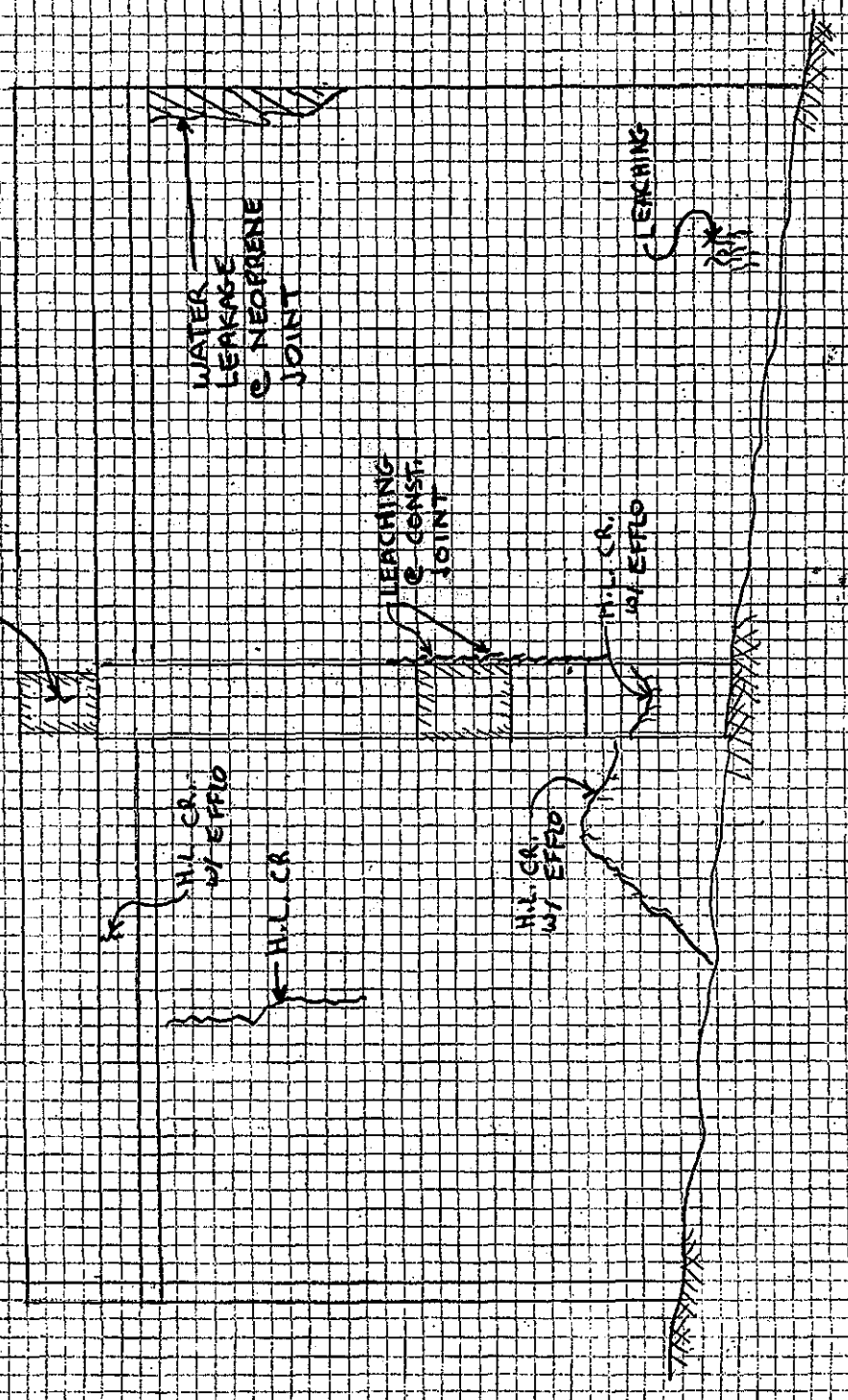

VIEW C-C
NORTH ABUT. (INT.)

FIELD NOTES

	JOB NO. 1784	BRIDGE NO. BOURNE
	DATE 3/5/96	SHEET 7/15
PREPARED BY: A.G. LICHTENSTEIN	CREW PWN/WM	

FIELD NOTES

	JOB NO. 1784	BRIDGE NO. BOURNE
	DATE 3/5/96	SHEET 8/15
PREPARED BY: A.G. LICHTENSTEIN	CREW WM / PWN	

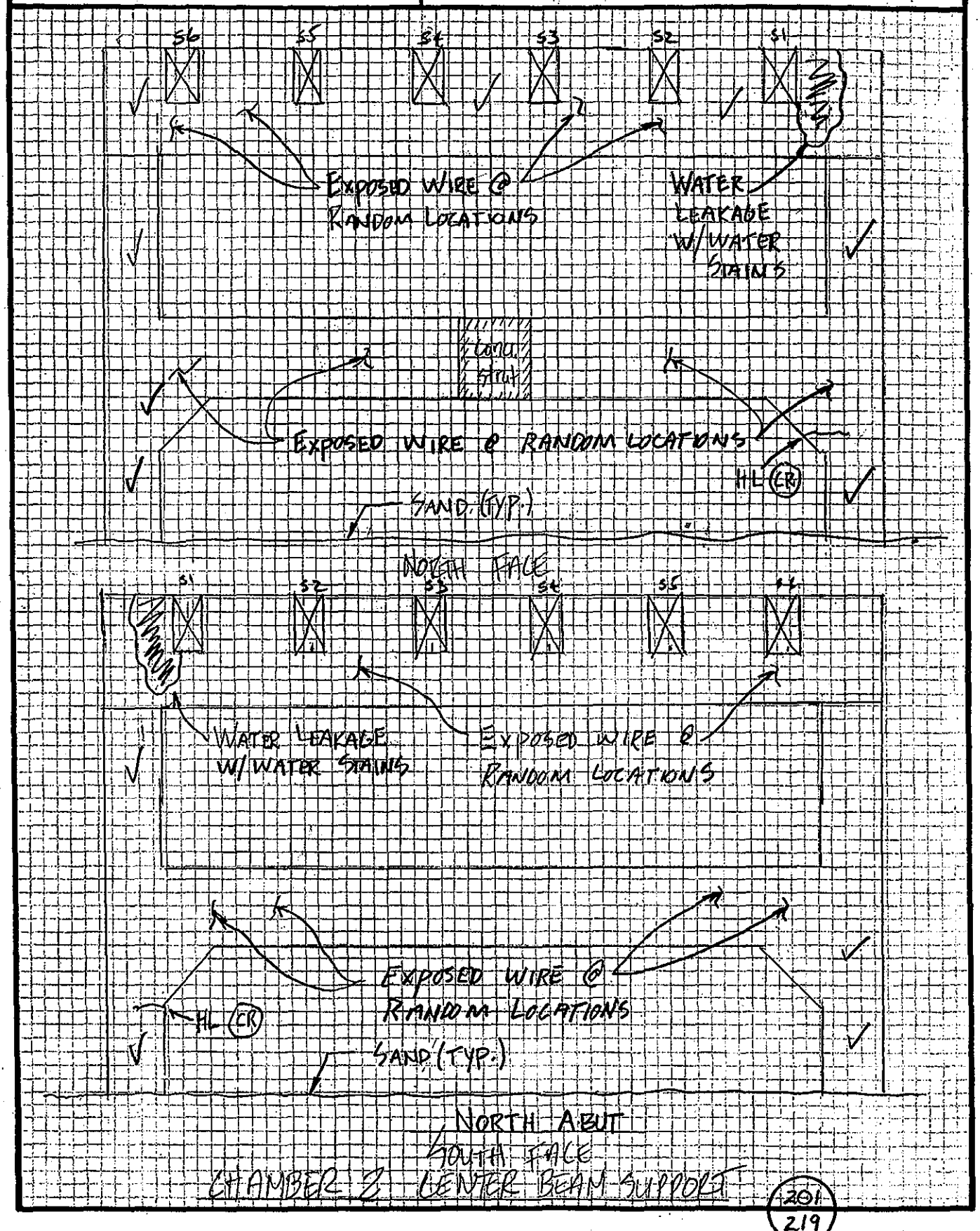

FIELD NOTES

	JOB NO. 1784 #6	BRIDGE NO. BOURNE
	DATE 3.5.96	SHEET 3 of 6
PREPARED BY: A.G. LICHTENSTEIN	CREW TF, EL	

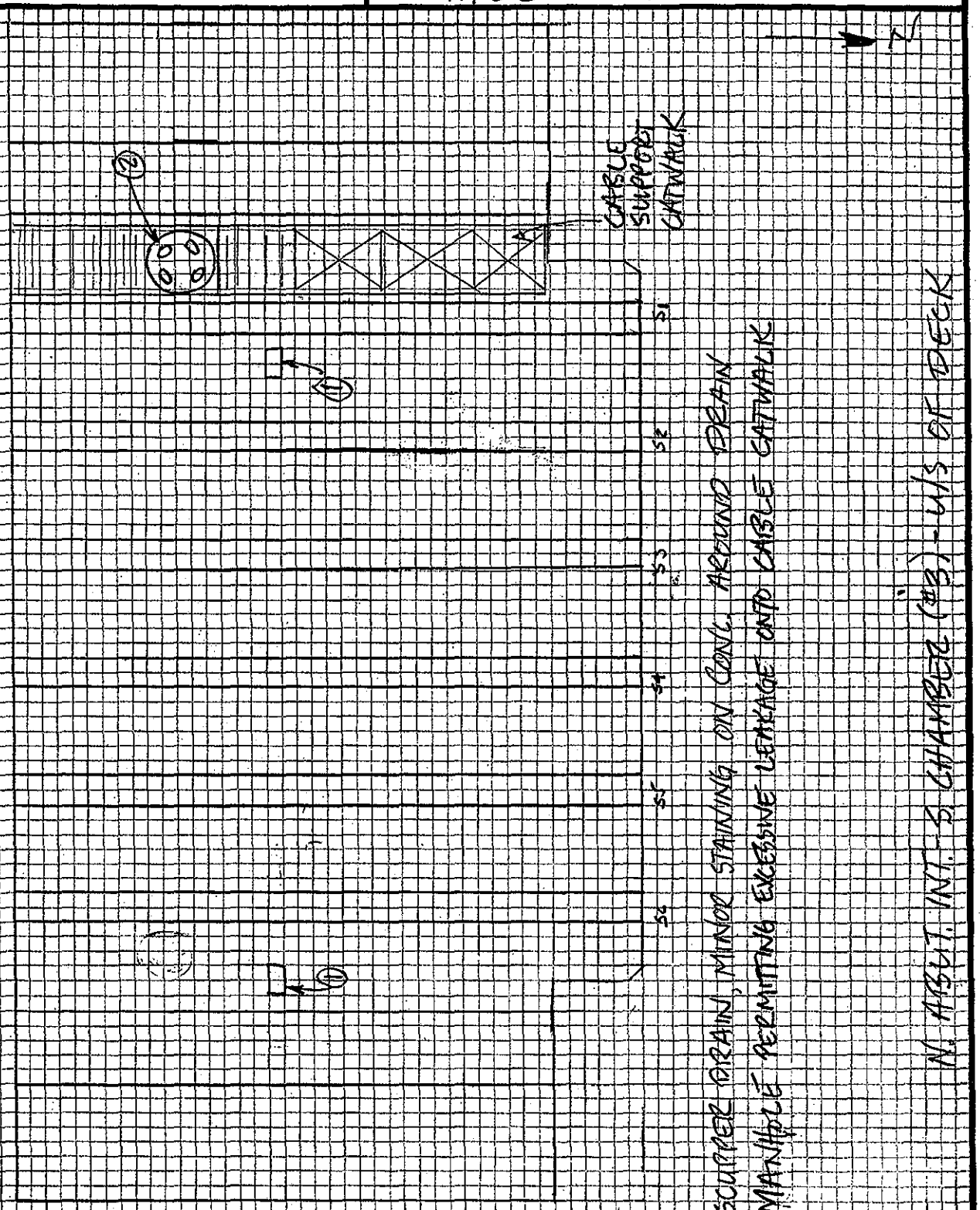

FIELD NOTES

	JOB NO. 1784	BRIDGE NO. BOURNE
	DATE 3/5/96	SHEET 2 OF 6
PREPARED BY: A.G. LICHTENSTEIN	CREW EL, TF	

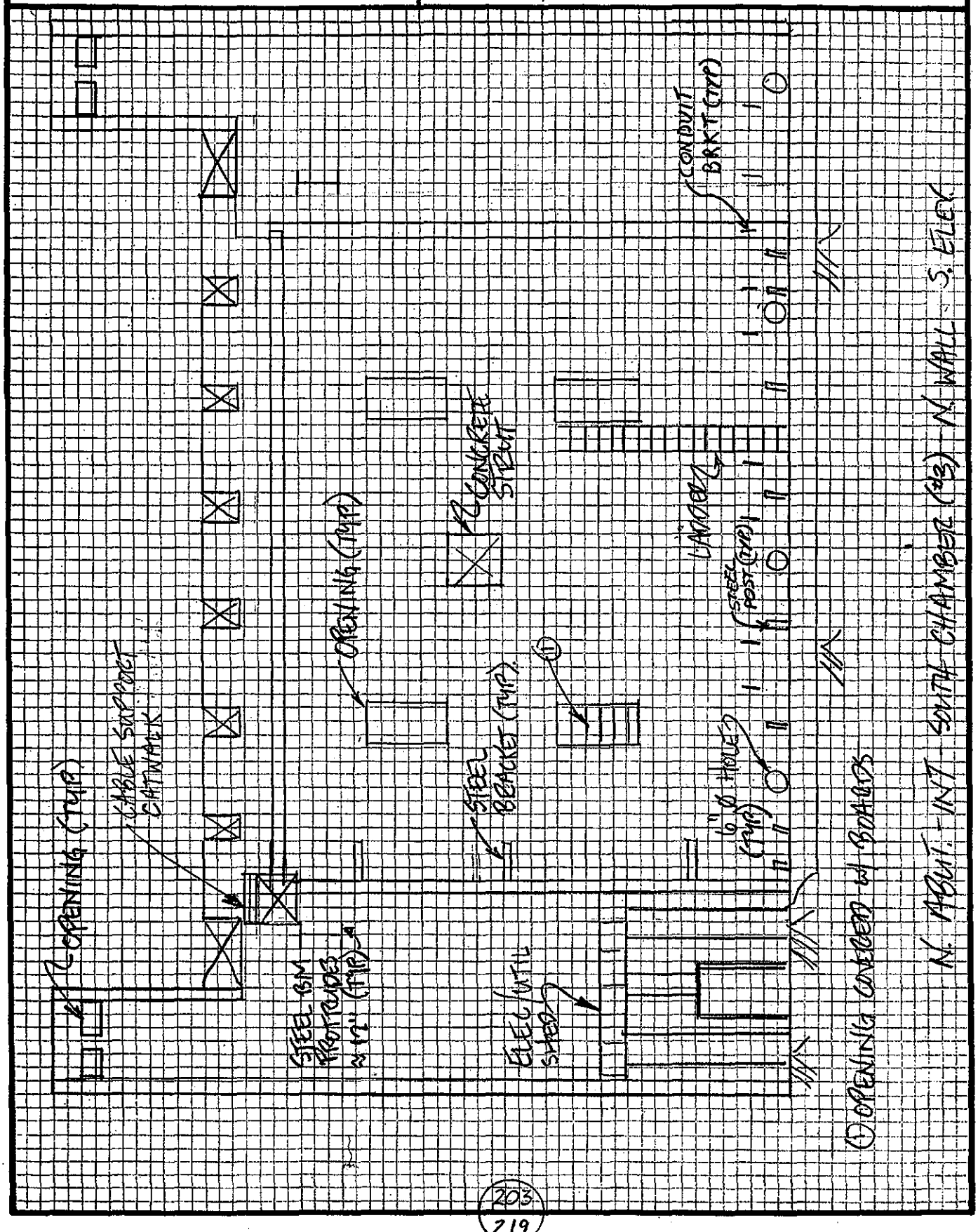

FIELD NOTES

PREPARED BY: A.G. LICHTENSTEIN	JOB NO. 1784 #6	BRIDGE NO. BOURNE
	DATE 3-5-96	SHEET 1 OF 6
	CREW TF, EL	

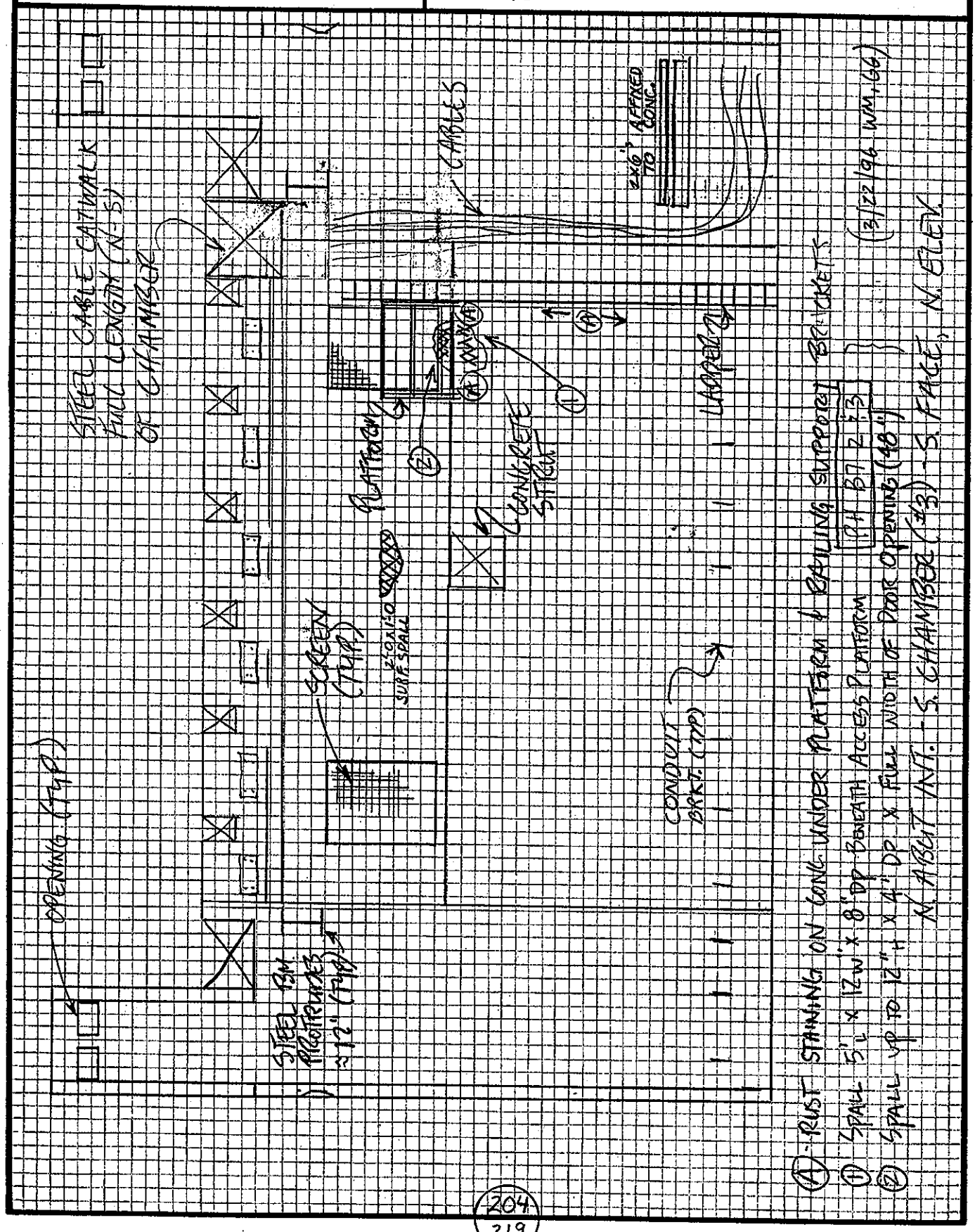

FIELD NOTES

	JOB NO. 1784 #6	BRIDGE NO. BOURNE
	DATE 3.5.96	SHEET 4 OF 6
PREPARED BY: A.G. LICHTENSTEIN	CREW EL, TF	

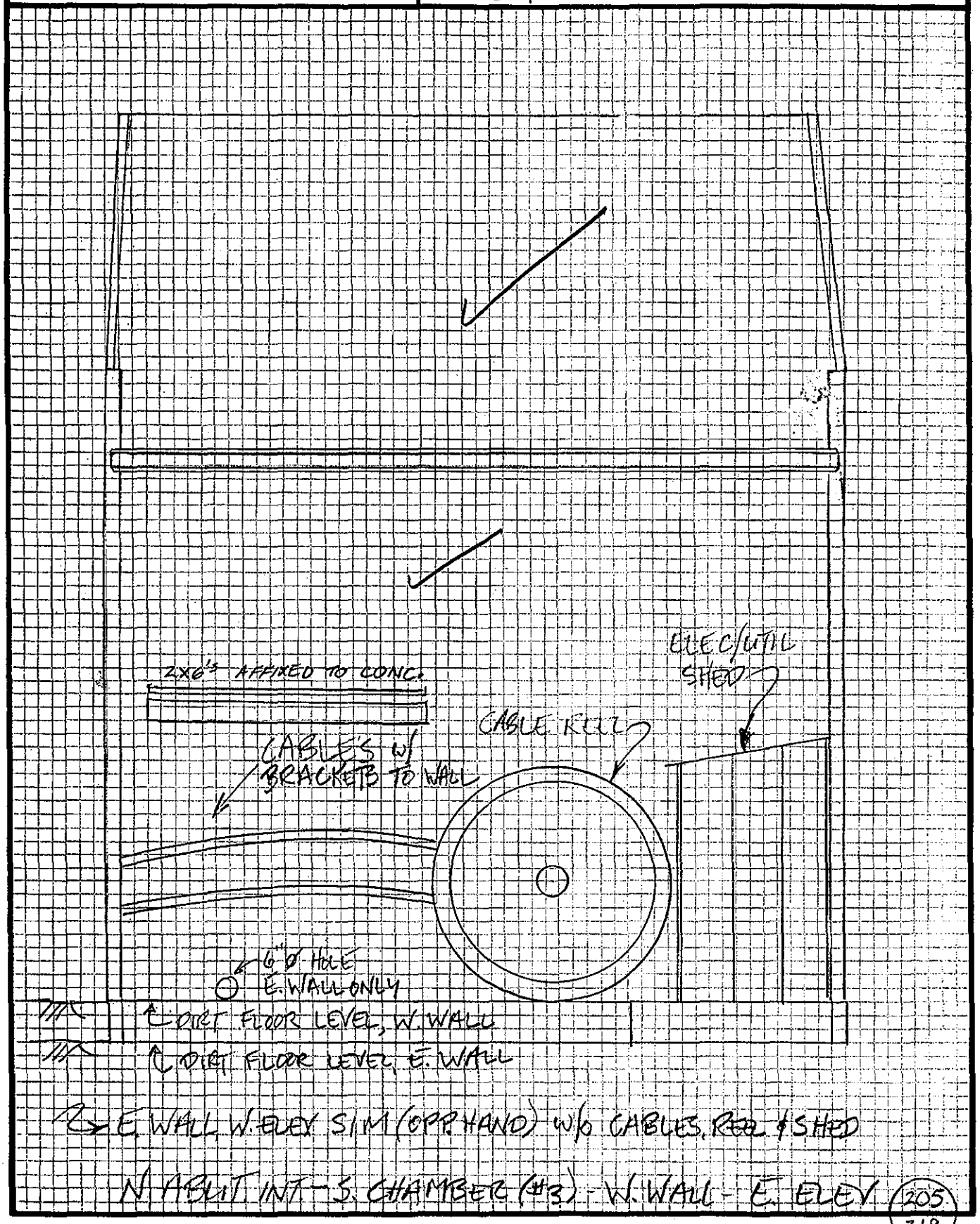

V. TOP OF DECK

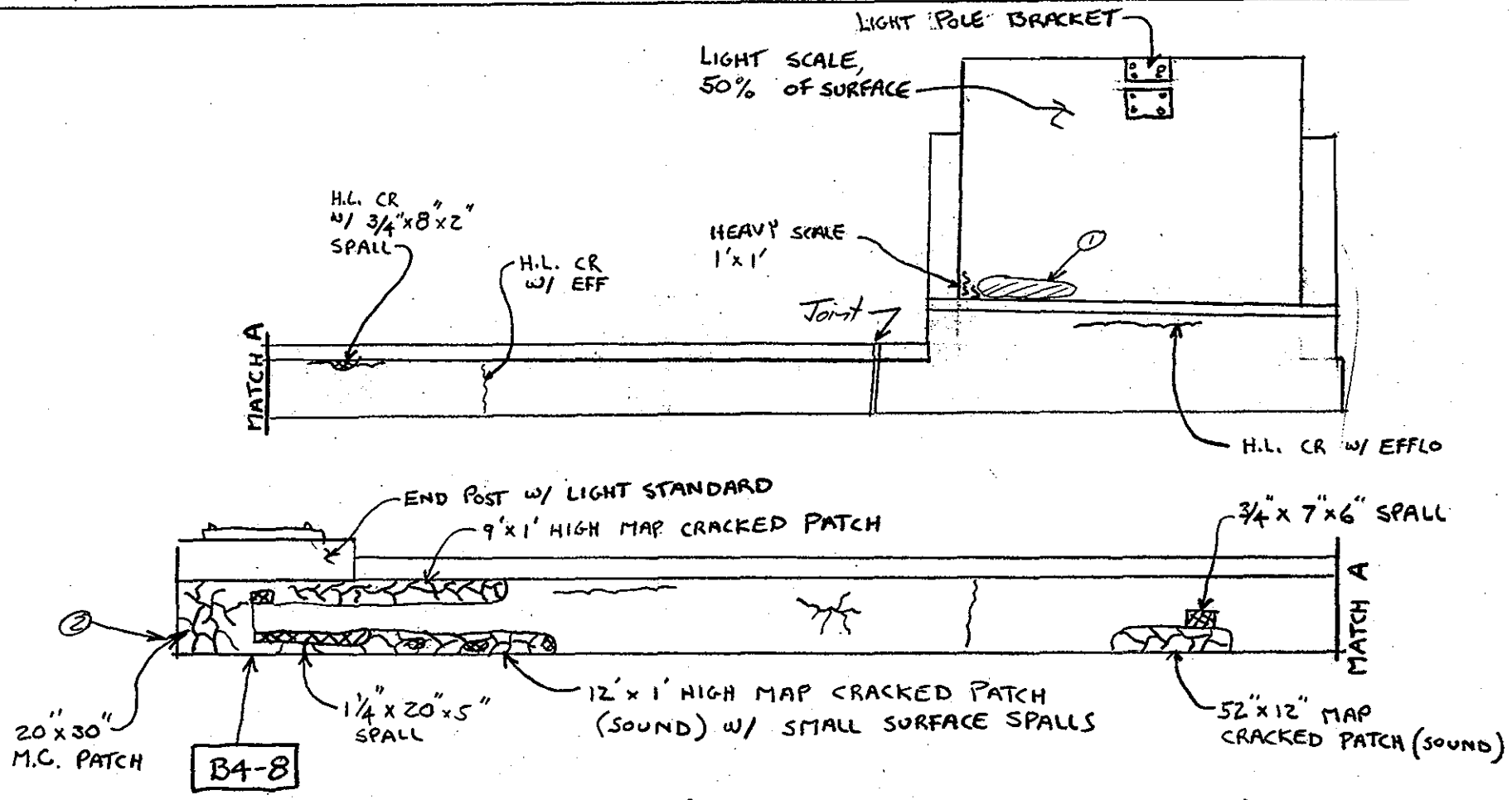

206
219

EAST ELEV. S.W. PARAPET

LEGEND

H.L. CR

NOTES: * SOUTH FACE OF ENDPOST IS SOUND MAP CRACKED PATCH
* WEST FACE OF END POST HAS 1'x3' HOLLOW MAP CRACKED PATCH
7/23/96 (GF/JAB) ① 4"x5' area of light to medium scale.
② Bottom, right corner of south face of end post has 8"ϕ Hollow area.

DEPARTMENT OF THE ARMY NEW ENGLAND DIVISION CORPS OF ENGINEERS	
BOURNE HIGHWAY BRIDGE ROUTINE INSPECTION	
NOTES BY: LICHTENSTEIN CONSULTING ENGINEERS	
JOB #1784	DATE: 3/18/96
CREW: RWN, JB	SHEET 6 OF 6

SOUTH EAST PARAPET
WEST FACE

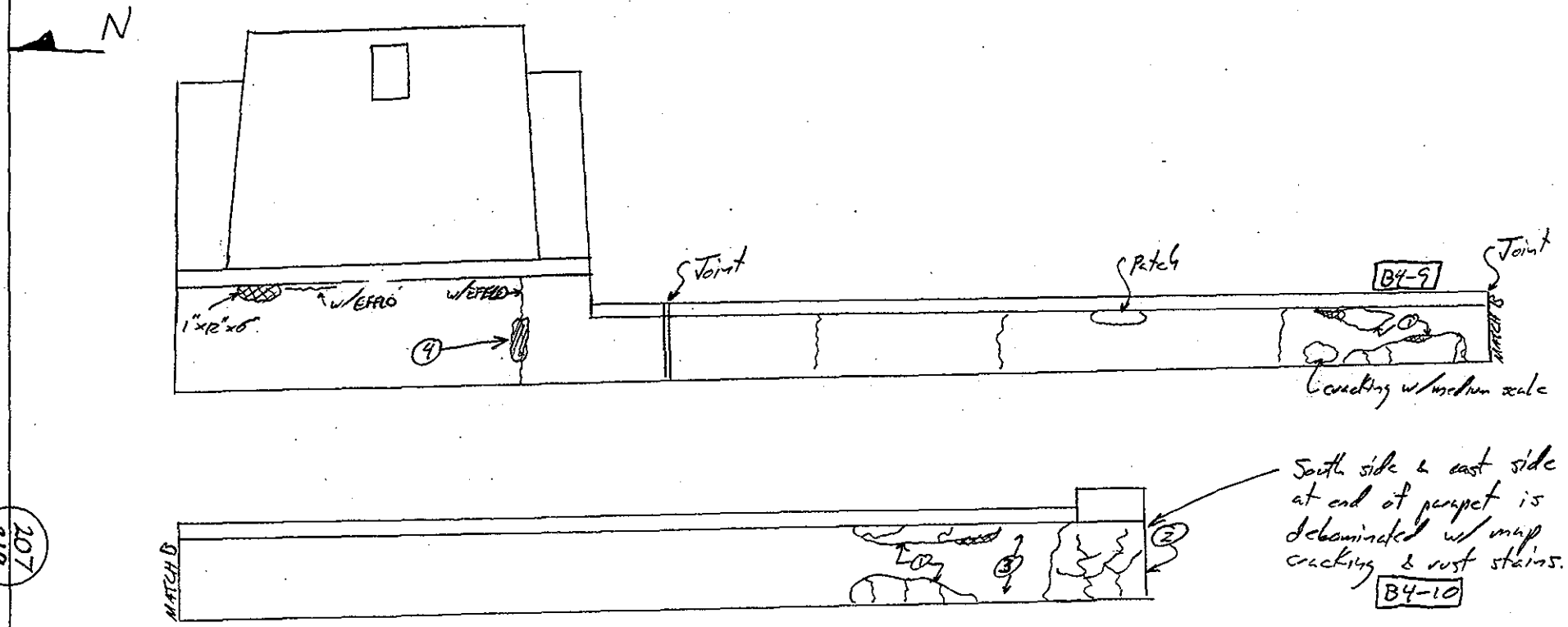

207
219

NOTES: 1) Patch w/light surface spalling and cracking around perimeter of PATCH
2) Patch w/map cracking and rust stains
3) Concrete adjacent to patch, 4' x Full height, is delaminated (Hollow sound w/hammer)
4) 7/23/96 (GG/JAB) 1" wide x 8' high x 1/4" deep scale.

DEPARTMENT OF THE ARMY NEW ENGLAND DIVISION CORPS OF ENGINEERS	
BOURNE HIGHWAY BRIDGE ROUTINE INSPECTION	
NOTES BY: LICHTENSTEIN CONSULTING ENGINEERS	
JOB #1784	DATE: 3/18/96
CREW: JB PWH	SHEET 5 OF 6

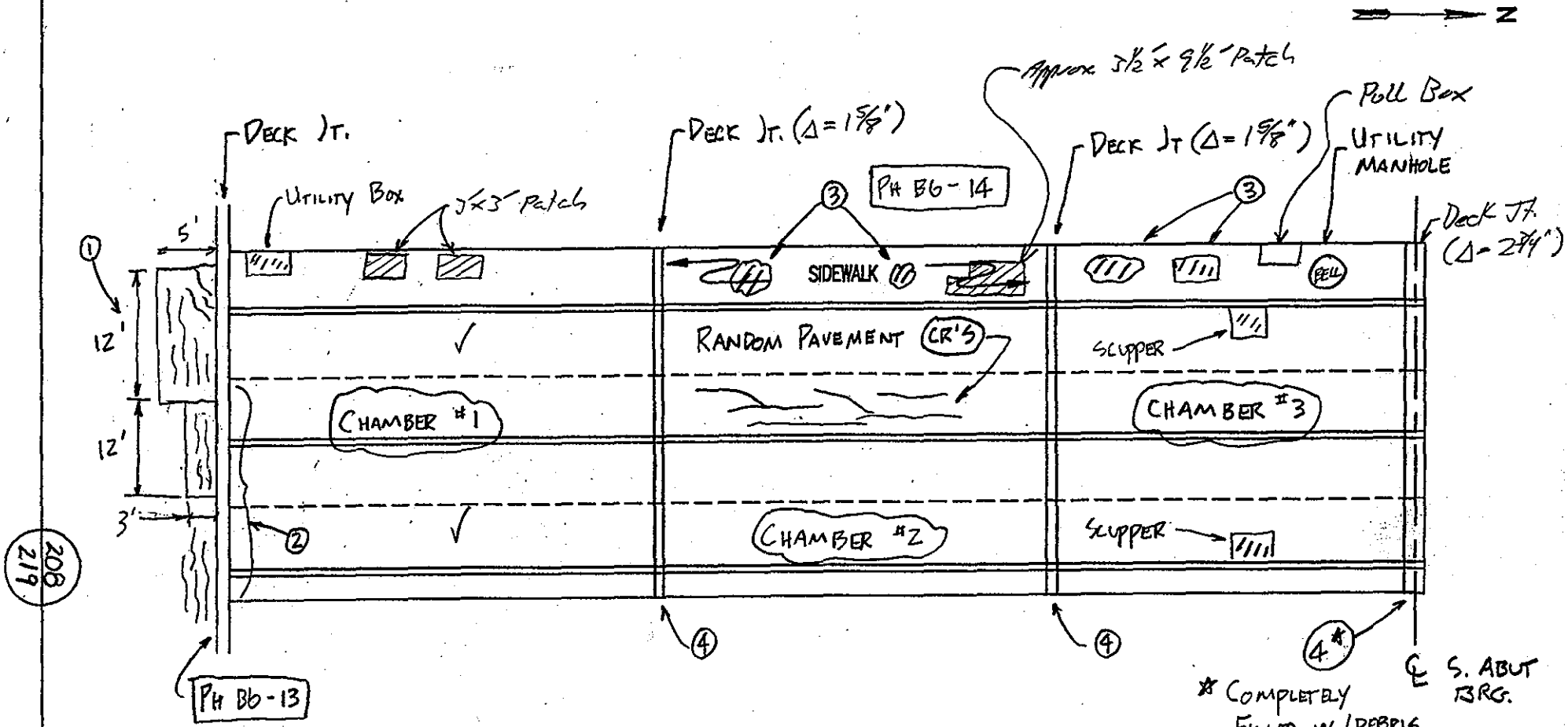

Typ. Note: • Excessive Sand Build-Up @ Curb Lines
• Med.-Hvy Sand Build-Up on Sidewalk

SPAN T-Beam's

208
219

NOTES:

① Patches in Pavement Wearing Surface w/ Cracks & Small Pieces of Missing Pave.
② 4" wide Steel Deck Jt. Plate not Flush w/ Road Surface for 75% of it's Length.
③ Random Areas of Failed Sidewalk Patches up to 3' ϕ. PH BG-14
④ Deck Jt. Partially Filled w/ Sand & Small Random Areas of Tears in Neoprene

3/25/96 (GG/JAB) Δ - Joint measurement taken @ sidewalk joint opening (T = 45°F)

TOP OF DECK	
DEPARTMENT OF THE ARMY NEW ENGLAND DIVISION CORPS OF ENGINEERS	
BOURNE HIGHWAY BRIDGE ROUTINE INSPECTION	
NOTES BY: LICHTENSTEIN CONSULTING ENGINEERS	
JOB #1784	DATE: 3/20/96
CREW: WM/GG	SHEET 1 OF 4

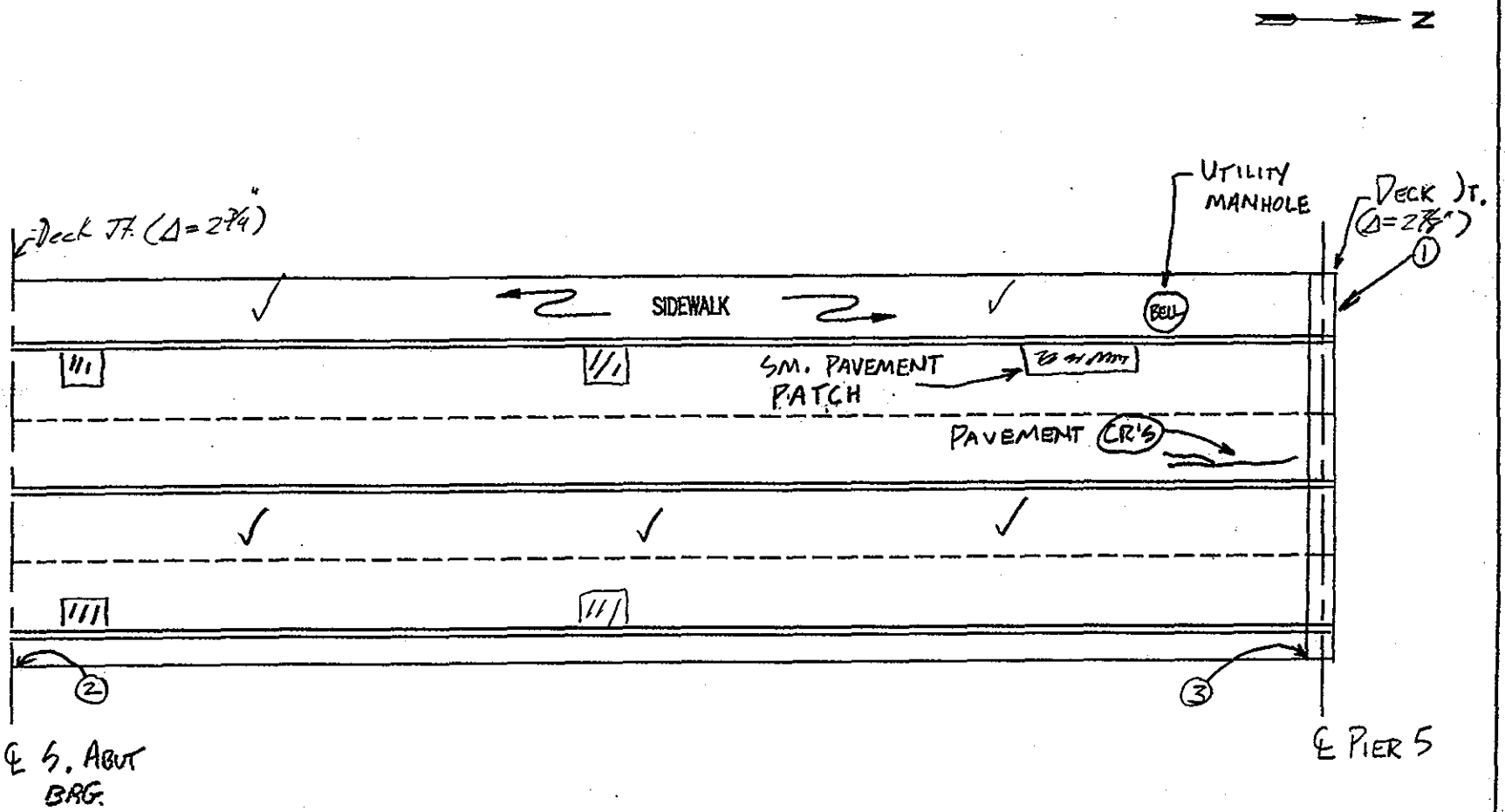

Typ. Note: • Med. - Hvy Sand Build-up @ Curb Lines
• Lt - Med. Debris on Sidewalk

= Scupper

SPAN 7

NOTES:

1. Deck Jt Completely filled w/ sand & debris
   3/23/96 (GG/JAB) Δ- Joint measurement taken @ sidewalk (T=45°F)
2. 1" high x 1'-0" wide hole @ bottom of expansion parapet plate. Hole is below deck level
3. 2" high x 8" wide hole @ base of light post. Hole is below access panel @ connection, 2 of 16 access panel bolts are missing due to corrosion hole.

TOP OF DECK	
DEPARTMENT OF THE ARMY NEW ENGLAND DIVISION CORPS OF ENGINEERS	
BOURNE HIGHWAY BRIDGE ROUTINE INSPECTION	
NOTES BY: LICHTENSTEIN CONSULTING ENGINEERS	
JOB #1784	DATE: 3/20/96
CREW: WM/GG	SHEET 2 OF 4

209
219

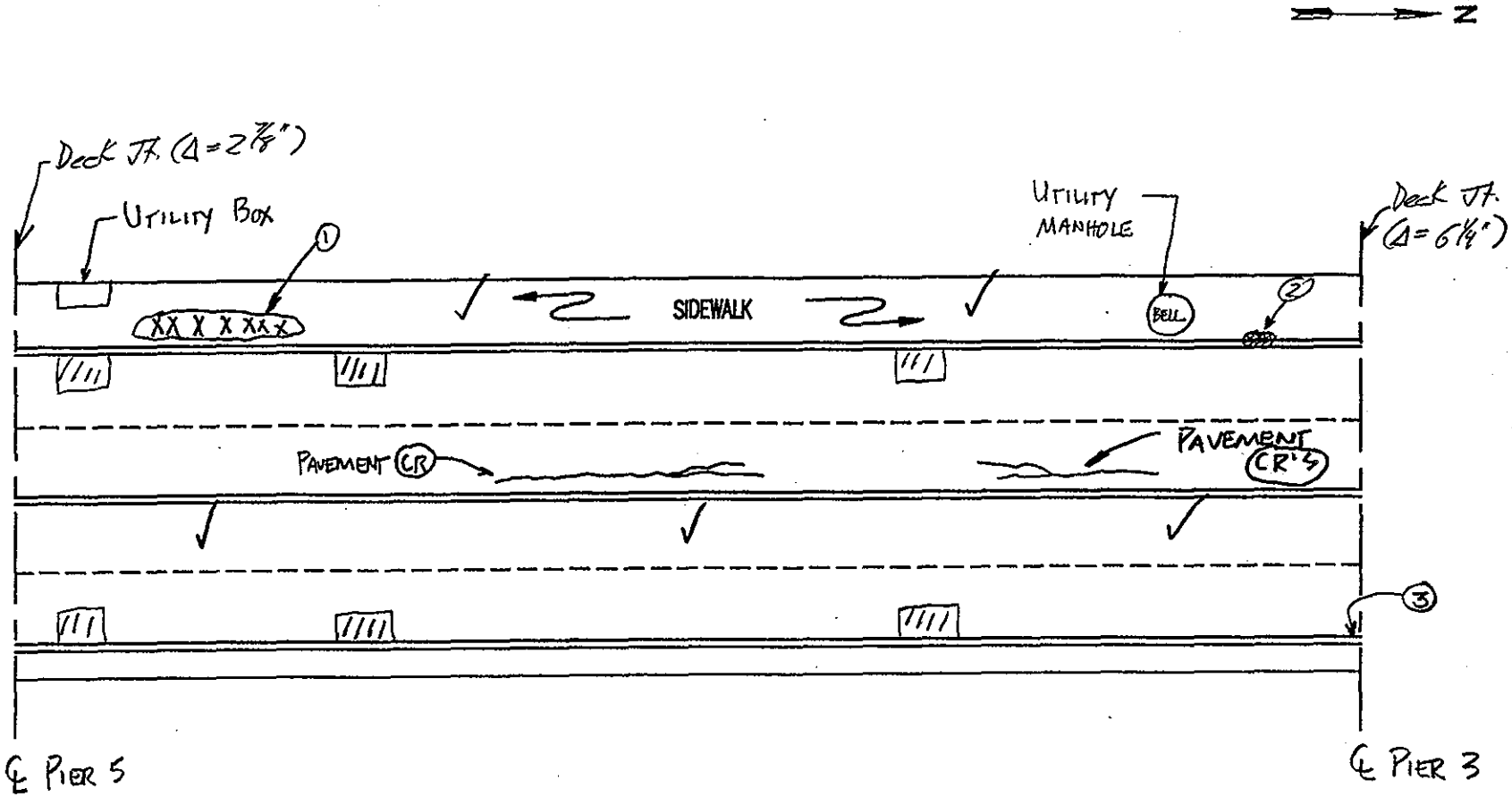

Typ Note: · Med.-Hvy Sand Build-up @ Curb Lines
· Lt-Med. Debris on Sidewalk.

= Scupper

SPAN 5

NOTES:

① Area of Failed Sidewalk Patch 10'L x 2'W
7/23/96 (GG/JAB) Δ - Joint measurement taken @ sidewalk (T=45°F)
② 2"x1"x ¾" spall in granite curb.
③ 1" high x 32" wide hole & 1"x4" hole along bott. of Expansion Parapet PR.
Total width of PR = 4'-0"

TOP OF DECK	
DEPARTMENT OF THE ARMY NEW ENGLAND DIVISION CORPS OF ENGINEERS	
BOURNE HIGHWAY BRIDGE ROUTINE INSPECTION	
NOTES BY: LICHTENSTEIN CONSULTING ENGINEERS	
JOB #1784	DATE: 3/20/96
CREW: WM/GG	SHEET 3 OF 4

210
219

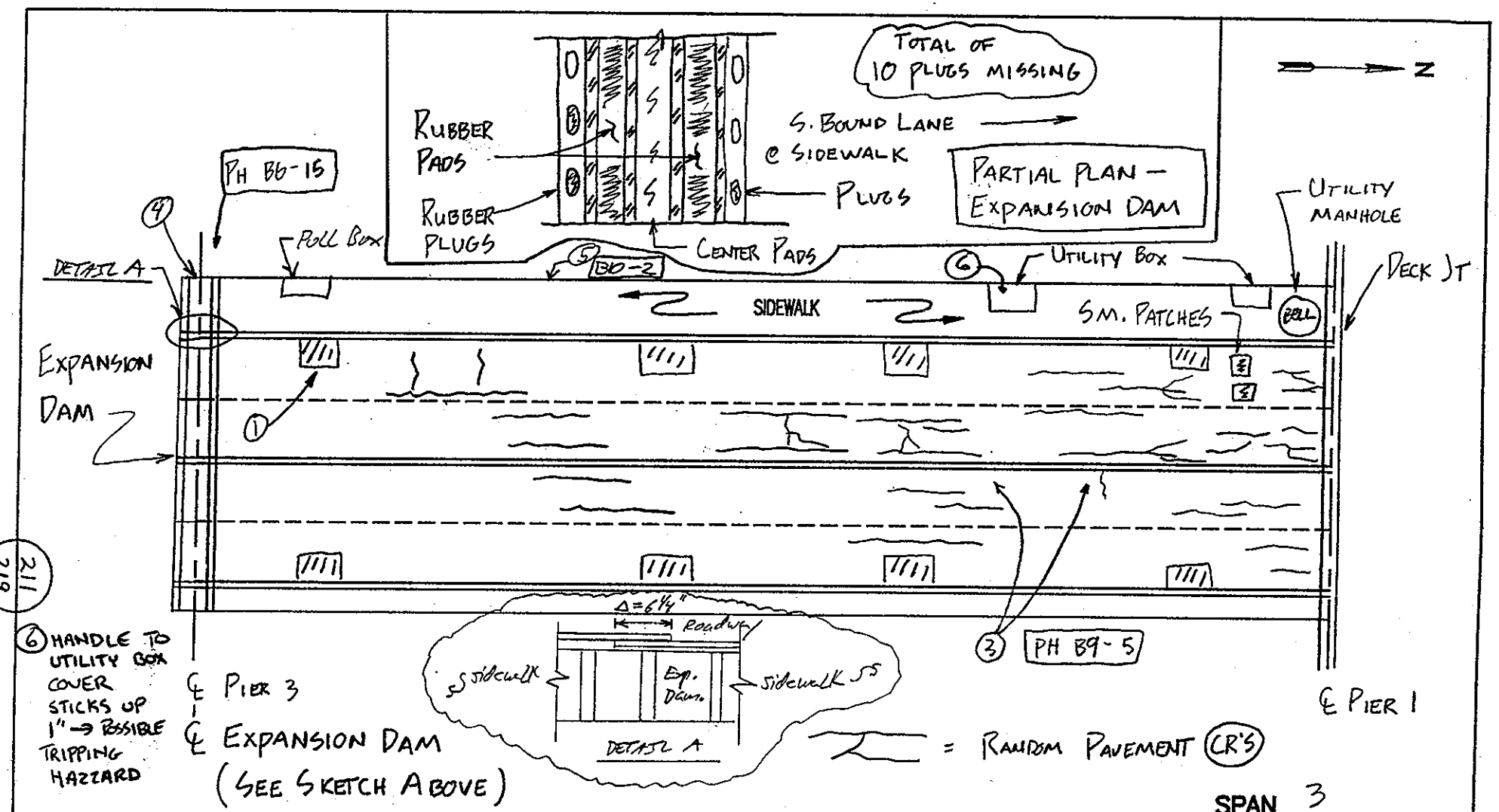

SPAN 3

Typ. Note: • Med.-Hvy Sand Build-Up @ Curb Lines
• Lt-Med Debris on Sidewalk

= Scupper

NOTES:

1. Scupper Grate Cracked
2. 2 Rubber Pads missing full length of Exp. Dam.; Center Rubber Pad shows excessive wear – Expansion Dam overall fair condition – Excessive Jt. banging from underneath – Hvy. Sand Build-up on Exp. Dam @ Curb Lines. Total of 10 Plugs Missing in Expansion Dam
3. Random Pavement (CR'S)

3/23/96 (GG/JAB) 4 Railing expansion plate bolted through @ Bottom B10-89
5 Cracked tack weld in anti-missile fence at base of bar.

TOP OF DECK	
DEPARTMENT OF THE ARMY NEW ENGLAND DIVISION CORPS OF ENGINEERS	
BOURNE HIGHWAY BRIDGE ROUTINE INSPECTION	
NOTES BY: LICHTENSTEIN CONSULTING ENGINEERS	
JOB #1784	DATE: 3/20/96
CREW: WM/GG	SHEET 4 OF 4

TEMP: 42° F

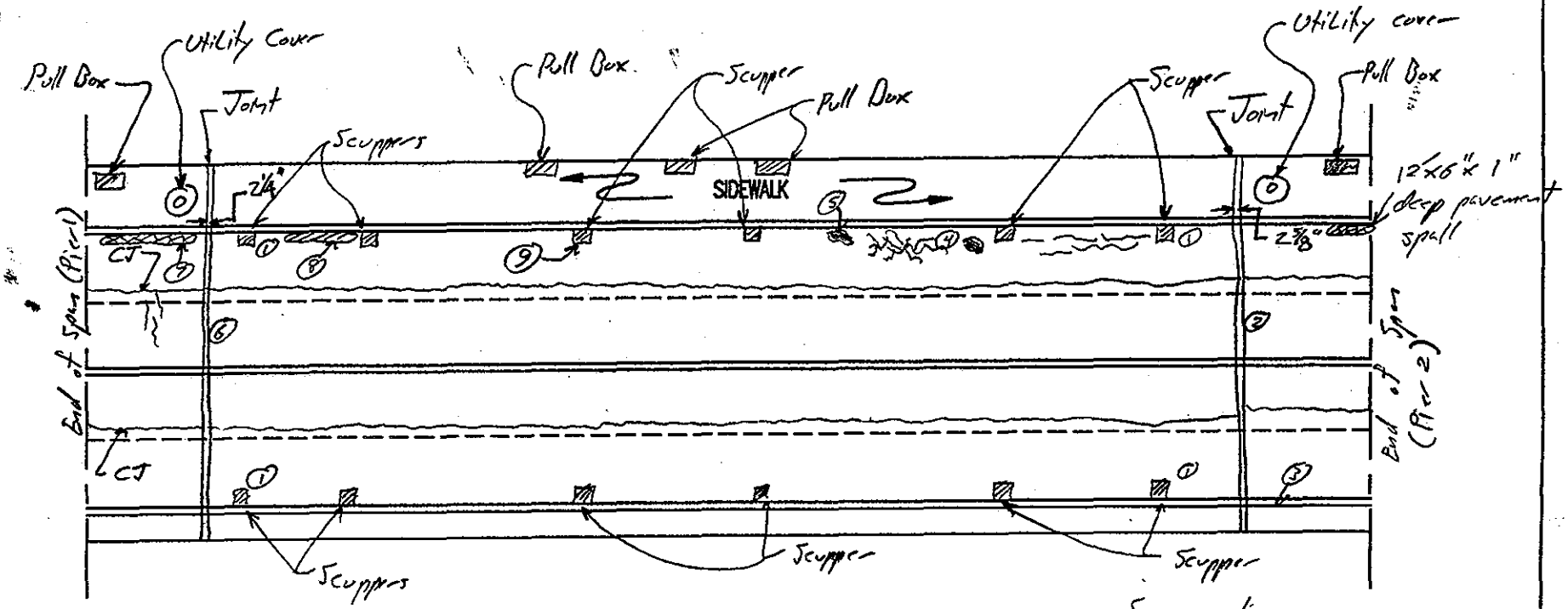

NOTES:
1) Scupper partially filled w/sand.
2) Joint seal partially filled w/sand. [B9-2] (Joint width 2 5/8")
3) Granit curb has vertical crack, full height.
4) 10"φ Pavement spall, 1" deep. [B9-3]
5) 18"x 8"x 1" deep pavement spall.
6) Joint seal partially filled w/sand. [B9-4] (Joint width 2¼")
3/23/96 (GG/JAB) ⑦ 6"x 15"x ½" deep pavement spall
⑧ 8"x 20" Pavement patch lifting up 2"
⑨ Cracked scupper grate. [B10-3]

TOP OF DECK	
DEPARTMENT OF THE ARMY NEW ENGLAND DIVISION CORPS OF ENGINEERS	
BOURNE HIGHWAY BRIDGE ROUTINE INSPECTION	
NOTES BY: LICHTENSTEIN CONSULTING ENGINEERS	
JOB #1784	DATE: 3/20/96
CREW: JB PWN	SHEET 6 OF 6

212
219

NOTE: SAND & DEBRIS TYPICAL @ CURBLINES

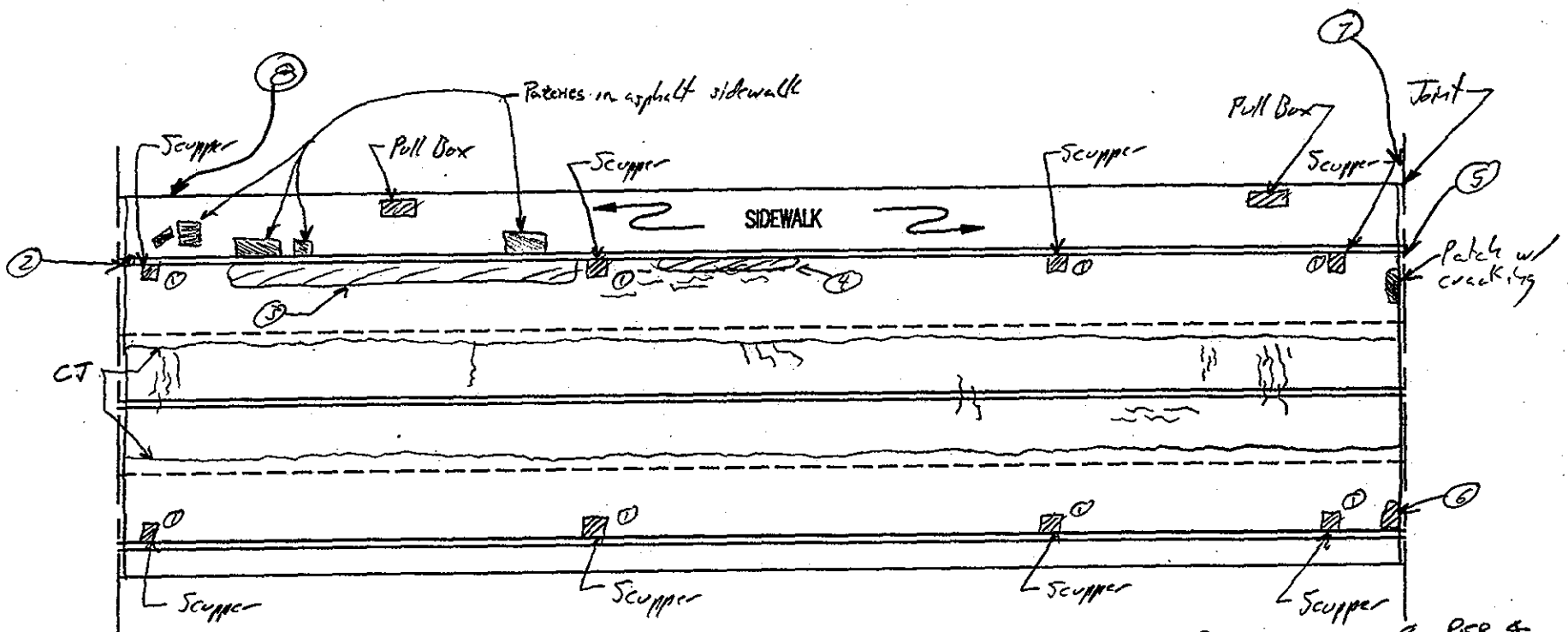

⑦ 1½"Ø CORROSION HOLE, EAST WEB ℞ LIGHT POST → 2" ABOVE SIDEWALK B13-4

⑧ 1½"Ø CORROSION HOLE SOUTH WEB OF LIGHT POST B13-5

} - crack

CJ - Construction Joint

SPAN 2

NOTES: 1) Scupper partially filled w/ sand.
7/23/96 (GG/JAB) ② 8"×6"×2" deep corner spall in granite curb. B10-4
③ 5' wide asphalt patch
④ Pavement lifting up at curb line for 20'. (Appears to be the result of a wheel rut)
⑤ Neoprene joint seal split for 10' length.
⑥ 1'×6" Patch.

TOP OF DECK	
DEPARTMENT OF THE ARMY NEW ENGLAND DIVISION CORPS OF ENGINEERS	
BOURNE HIGHWAY BRIDGE ROUTINE INSPECTION	
NOTES BY: LICHTENSTEIN CONSULTING ENGINEERS	
JOB #1784	DATE: 3/20/96
CREW: Pwn JB	SHEET 5 OF 6

213
219

TEMP. 42°F

NOTE: SAND & DEBRIS TYPICAL @ CURBLINES

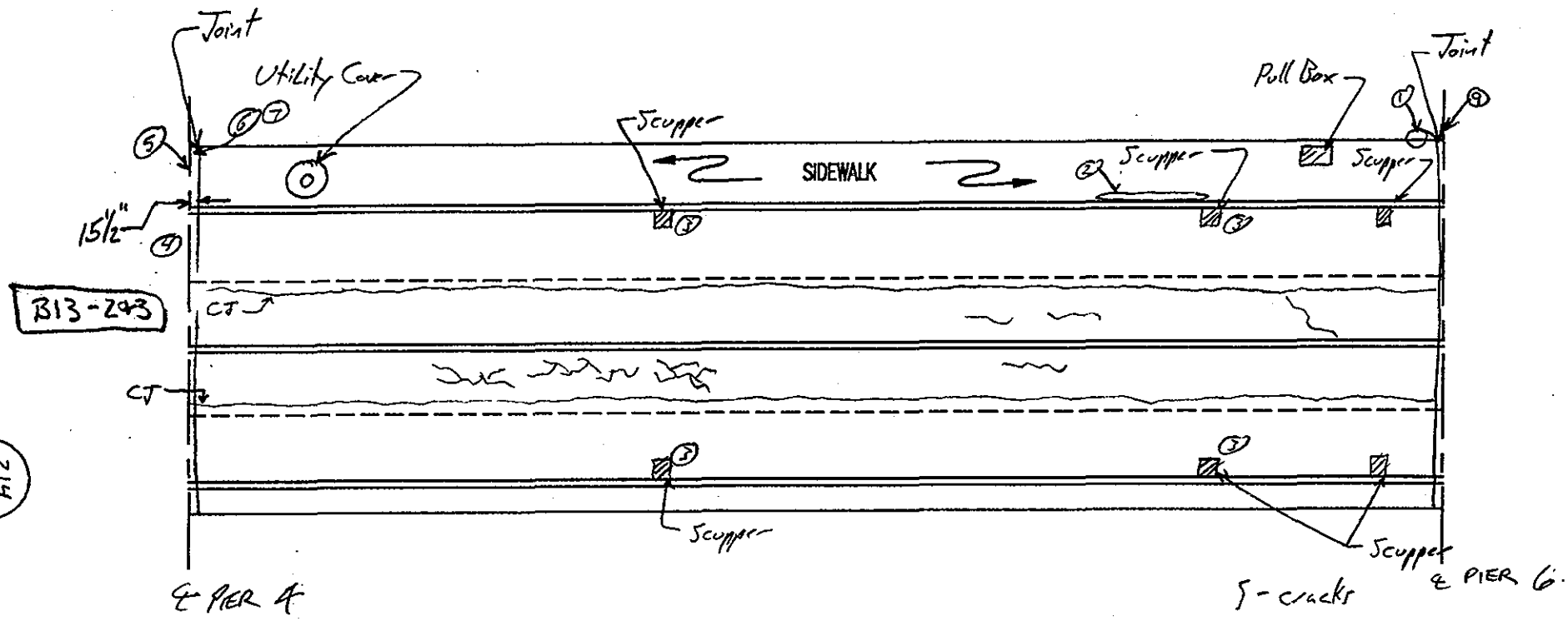

214
219

(7) AT LEAST 2 OF 4 NUTS MISSING ON SUICIDE FENCE LOWER CONNECTION TO PARAPET → ONE NUT IS INACCESSABLE

(8) 2" HIGH x 18" WIDE HOLE ON EXPANSION PARAPET EXPANSION PL, ALONG BOTT OF PL BELOW DECK LEVEL

(9) (2) 1"ϕ HOLES IN EXPANSION PARAPET EXP. PL, (1) 4"x4" HOLE ON SAME PL BELOW DECK LEVEL

SPAN 4

NOTES:
1) Broken bar on suicide fence at joint location [B8-21]
2) Sidewalk sealcoat pulling away at curbline. This is typical along entire length of sidewalk.
3) Scuppers partially filled w/sand [B8-22]
4) 6 individual elastomeric joint seals, all partially filled w/sand. [B8-23] (Joint opening width 15½")
5) Steel expansion parapet showing rust & corrosion w/several large holes inside span 2 parapet. (Largest hole 8"ϕ) [B8-24]
6) 3 of 4 nuts missing on suicide fence connection to steel parapet. [B8-25]

TOP OF DECK	
DEPARTMENT OF THE ARMY NEW ENGLAND DIVISION CORPS OF ENGINEERS	
BOURNE HIGHWAY BRIDGE ROUTINE INSPECTION	
NOTES BY: LICHTENSTEIN CONSULTING ENGINEERS	
JOB #1784	DATE: 3/20/96
CREW: JD Pond	SHEET 4 OF 6

TEMP. 42°F

NOTE: LIGHT SAND & DEBRIS TYPICAL @ CORBUNES

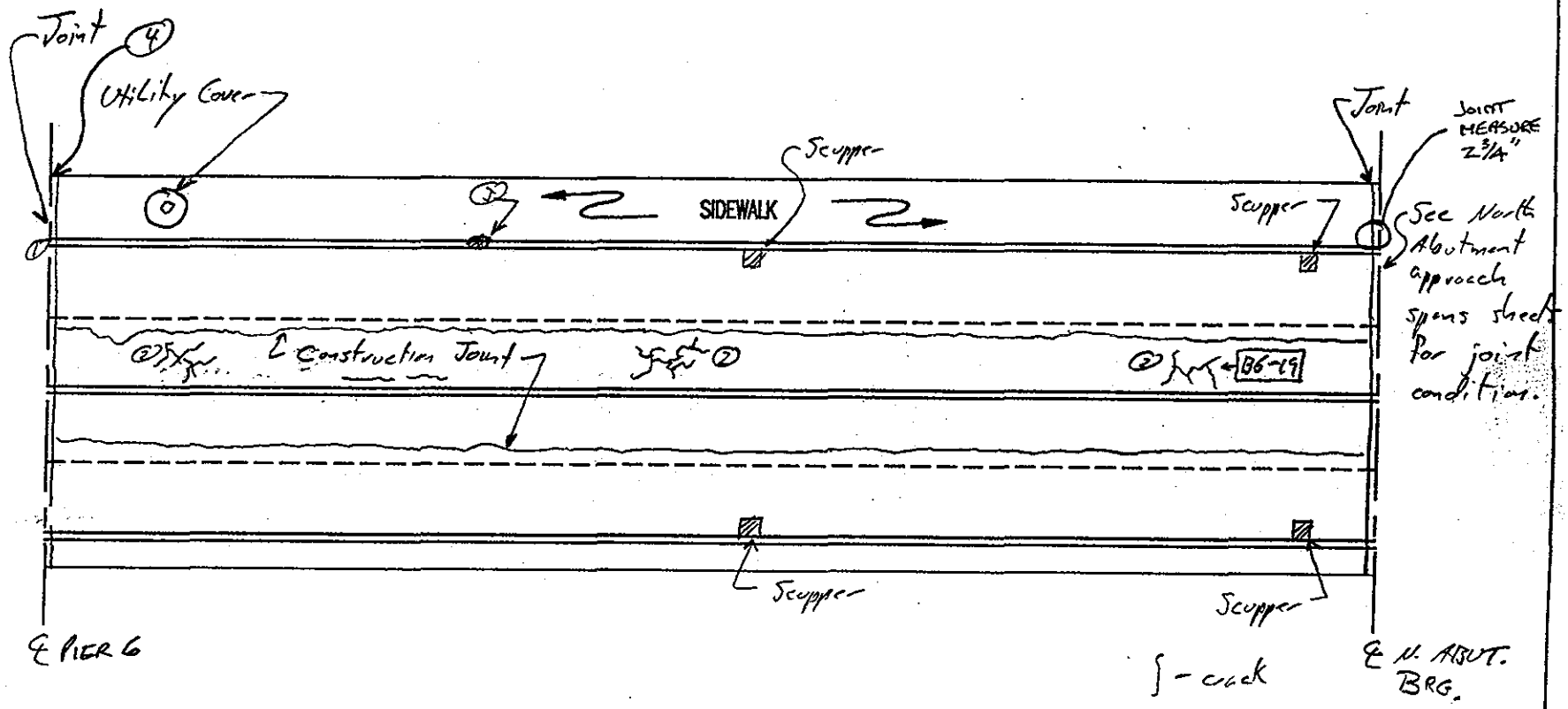

215
219

SPAN 6

NOTES: 1) Joint seal partially filled w/sand. (Joint width is 2 3/4") BB-20
2) Map cracking at various locations in pavement.

7/23/96 (GG/JAB) ① 3"x3"x1" deep corner spall in granite curb.
② Railing expansion plate bolted through @ bottom.

TOP OF DECK	
DEPARTMENT OF THE ARMY NEW ENGLAND DIVISION CORPS OF ENGINEERS	
BOURNE HIGHWAY BRIDGE ROUTINE INSPECTION	
NOTES BY: LICHTENSTEIN CONSULTING ENGINEERS	
JOB #1784	DATE: 3/20/96
CREW: JB PMM	SHEET 2 OF 6

216/219

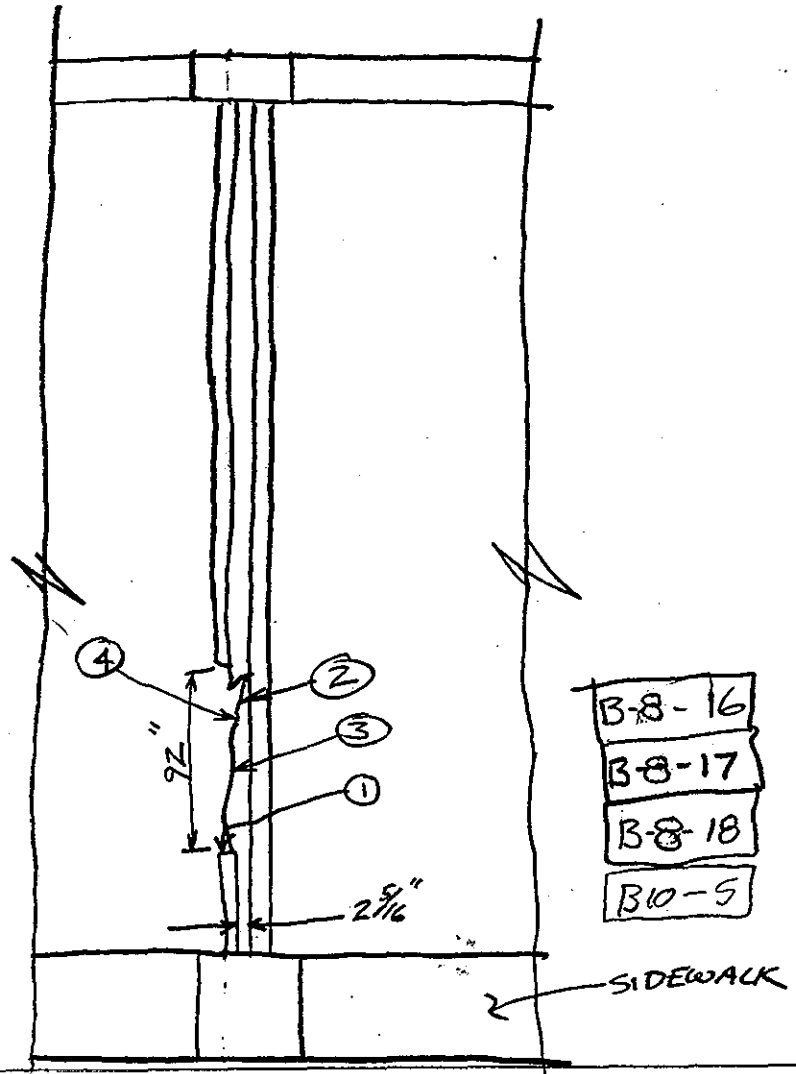

DECK JOINT
NORTH ABUT + SPAN 6

NOTES:

1. ARMOURED JOINT PLATE BROKEN & MISSING OVER 92"
2. NEOPRENE JOINT SEAL TORN OVER 6" (LIGHT VISABLE THROUGH DECK
3. NEOPRENE SEAL PARTIALY DISLODGED & FILLED w/ DEBRIS
4. DECK CONCRETE BEGINING TO SPALL

7/23/96 (CG/JAB)

DEPARTMENT OF THE ARMY NEW ENGLAND DIVISION CORPS OF ENGINEERS	
BOURNE HIGHWAY BRIDGE ROUTINE INSPECTION	
NOTES BY: LICHTENSTEIN CONSULTING ENGINEERS	
JOB #1784	DATE: 3/20/96
CREW: Plant JB	SHEET 3 OF 6

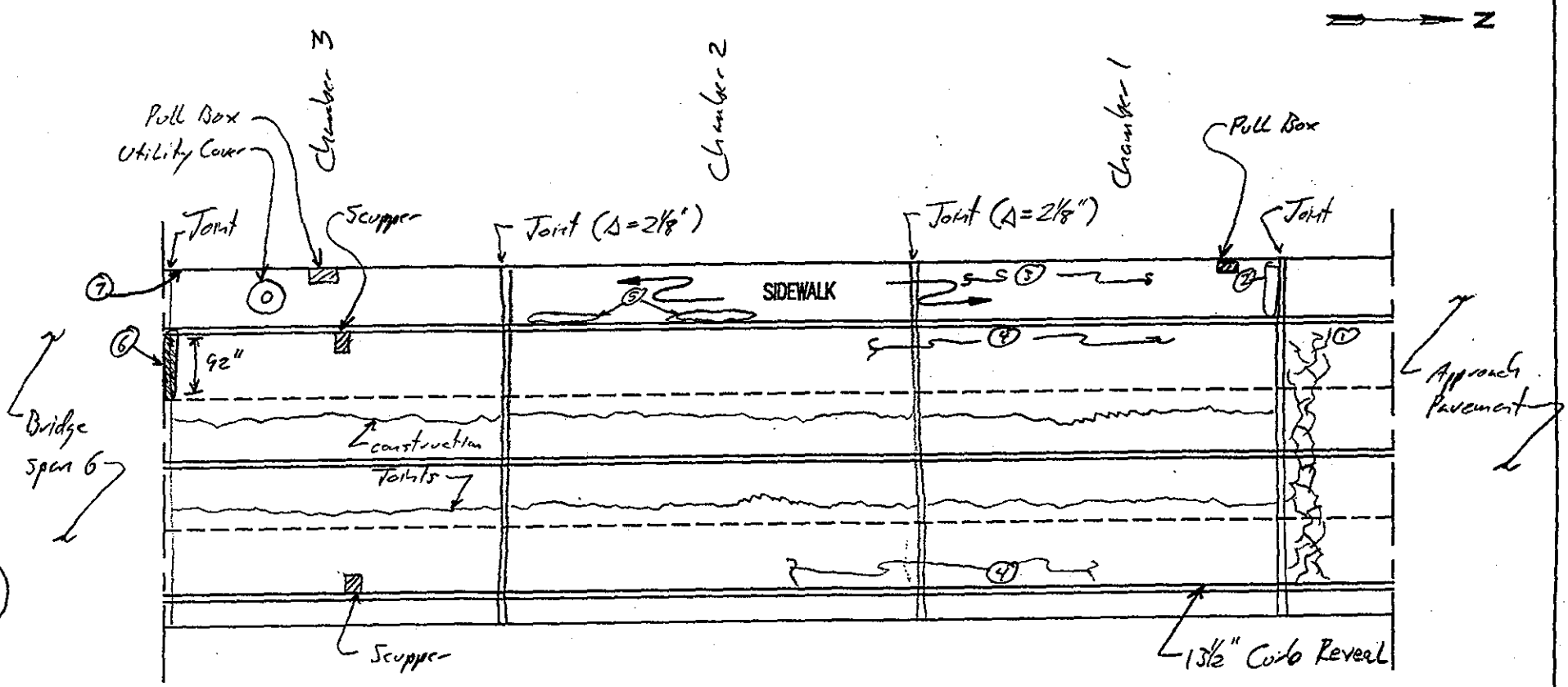

VERIFIED 7/23/96 (GG/JAB) Δ - Joint measurement taken @ sidewalk joint opening (T= 45°F)

North Abutment Approach Spans

SPAN____

⑦ 1 1/2" Ø HOLE @ BOTT. OF EXPANSION PARAPET EXPANSION ℞.

NOTES:

1) Map cracking in approach pavement adjacent to deck joint. Several small surface spalls in asphalt. B8-9 (Cracking is 1/8" wide)
2) Approach sidewalk concrete not level w/ asphalt sidewalk on bridge. Extensive sand deposits. Bridge sidewalk 1" higher than adjacent approach sidewalk. B8-13
3) Sand deposits on sidewalk. B8-10
4) Sand deposits along curbline B8-12
5) Sidewalk sealcoat pulling away at curbline.
6) Joint damage. Steel armor gone at north end of joint. Elastomeric seal damaged. (See detail)

TOP OF DECK	
DEPARTMENT OF THE ARMY NEW ENGLAND DIVISION CORPS OF ENGINEERS	
BOURNE HIGHWAY BRIDGE ROUTINE INSPECTION	
NOTES BY: LICHTENSTEIN CONSULTING ENGINEERS	
JOB #1784	DATE: 3/20/96
CREW: PWH JB	SHEET 1 OF 6

217
219

NORTH-WEST PARAPET (EAST FACE)

N

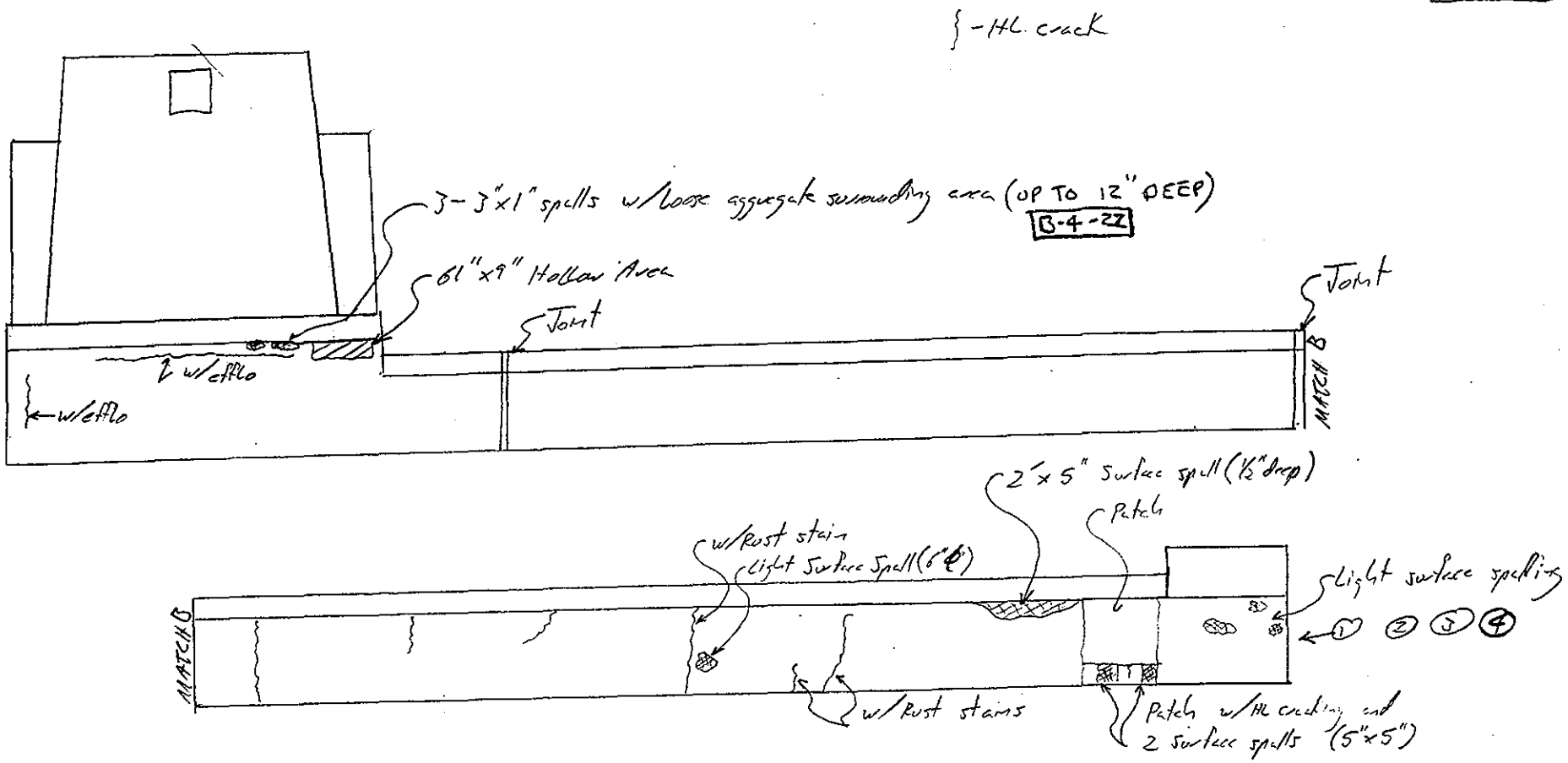

218
219

NOTES: 1) North face at end of parapet has several HL cracks w/efflo.
2) west face at end of parapet has several HL to med. width cracks w/heavy efflo. present. (Bottom right corner has a 16"x5"x1" deep spall.)
3) Outer south face of end post. 3'x1' surface spall surrounded by delaminations, map cracking & efflo. deposits. B8-4
4) Guardrail terminal section not connected to parapet. B8-3
* 3/23/96 (GG/JAB)

DEPARTMENT OF THE ARMY NEW ENGLAND DIVISION CORPS OF ENGINEERS	
BOURNE HIGHWAY BRIDGE ROUTINE INSPECTION	
NOTES BY: LICHTENSTEIN CONSULTING ENGINEERS	
JOB #1784	DATE: 3/19/96
CREW: JB Ford	SHEET 5 OF 8

NORTH-EAST PARAPET (WEST FACE)

CURB REVEALS → TAKEN MIDSPAN

N

CHAMBER 1, N. ABUT = 15"
CHAMBER 3, N. ABUT = 15¼"
SPAN 6 = 16½"
SPAN 4 = 15½"
SPAN 2 = 15½"
SPAN 1 = 15¾"
SPAN 3 = 15½"
SPAN 5 = 15¼"
SPAN 7 = 15¾"
CHAMBER 3, S. ABUT. = 16½"

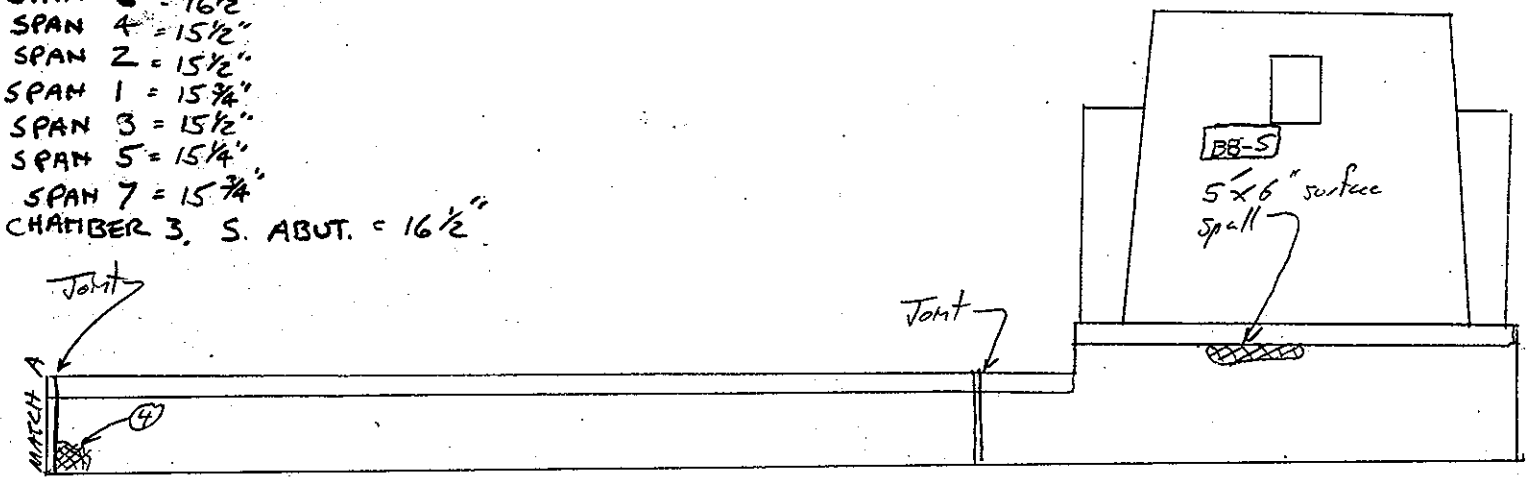

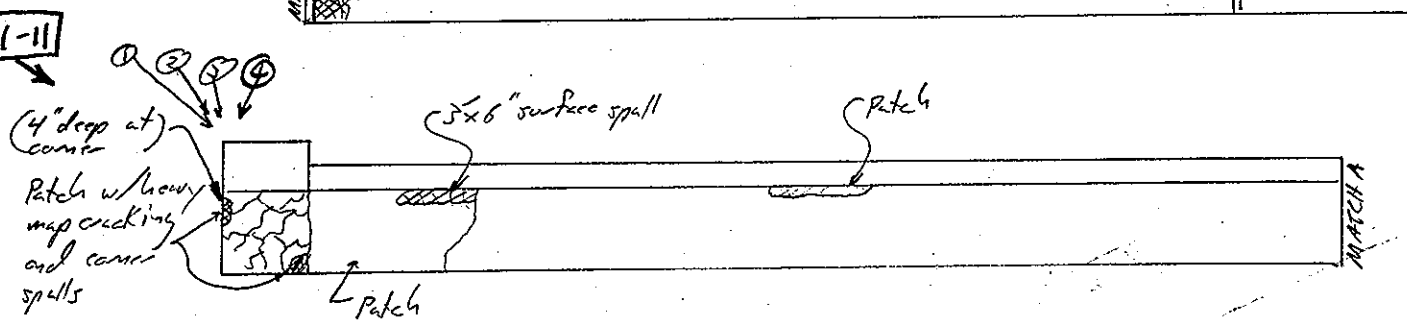

B8-6

NOTES: 1) North face of end post has 2"x6" surface spall w/corner spall as described above.
2) East face of end post has several HL cracks w/efflo. (Also, 8"x6"x1" deep spall)
3) Outer south face of end post has 18" × Full width × 2½" deep spall at bottom. Also, cracking w/efflo. deposits present. B8-7
4) Guard rail terminal section not attached to parapet
* 7/23/96 (GG/JAB) ④ 8"×2"×1" deep spall

DEPARTMENT OF THE ARMY	
NEW ENGLAND DIVISION CORPS OF ENGINEERS	
BOURNE HIGHWAY BRIDGE	
ROUTINE INSPECTION	
NOTES BY: LICHTENSTEIN	
CONSULTING ENGINEERS	
JOB #1784	DATE: 3/19/96
CREW: JB Ron	SHEET 6 OF 8