FILE COPY

CONNECTICUT RIVER FLOOD CONTROL PROJECT

HOLYOKE, MASS.

CONNECTICUT RIVER, MASSACHUSETTS

ANALYSIS OF DESIGN FOR LOCAL PROTECTION WORKS

FISCAL YEAR 1939 DIKE SECTION, ITEM HI.2
INCLUDING PUMPING PLANTS — CONTRACT

APPENDIX E

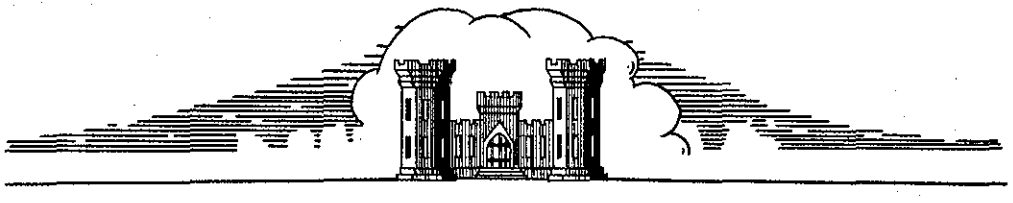

APRIL, 1939

CORPS OF ENGINEERS, U.S. ARMY

U.S. ENGINEER OFFICE PROVIDENCE, R.I.

HOLYOKE DIKE

COMPUTATIONS

FOR

FLOOD GATES & HOISTS

407-670A

APPENDIX E

	Page No.
Gate at Outlet No. 1	E-1
" " " No. 4	E-8
" " " No. 6	E-15
" " " No. 7	E-26
" " " No. 8a	E-26
" " " No. 8b	E-40
" " " No. 9	E-15
" " " No. 10	E-40
" " " No. 11	E-26
" " " No. 12	E-40
Hoists	E-54

WAR DEPARTMENT

U. S. ENGINEER OFFICE, PROVIDENCE, R. I.

Page 1

Subject: Holyoke Dike

Computation: Outlet #1 Gate

Computed by: E H Ince Checked by: HWK Date: 4-18-39

U. S. GOVERNMENT PRINTING OFFICE 3--10528

Basis of Gate Design:

Area of Gate, upon which Pressure Head of Water acts, to be considered the ℄-℄ of Seal Strips. Gate members to be considered as Simple Beams with ℄ supports at ℄ of Seal Strips. Pressure Head is computed with Water Level at Top of Wall with Conduit on Seal side of Gate Unwatered.

Given:

Elev. of Top of Wall	= 80.00
Elev. of Bottom Sill	= 51.50
Elev. of Bottom of Conduit	= 52.00
Elev. of Top of Conduit	= 63.00
Conduit Opening	= 10'-0" Wide x 11'-0" High
Size of gate	= 11'-0" Wide x 11'-8" High
No. of gates required	= 2

Note: This Gate is applicable to Outlet No. 1 only

WAR DEPARTMENT

U. S. ENGINEER OFFICE, PROVIDENCE, R. I.

Page 2

Subject Holyoke Dike

Computation Outlet #1 Gate

Computed by E H Bric Checked by H JK Date 4-18-39

U. S. GOVERNMENT PRINTING OFFICE 3—10528

Computations:

Mean Pressure Hd. on Gate = 22.50'
= 22.50 × 62.5 = 1410 #/□'

Load on Gate = 10.58 × 11.33 × 1410 = 169,000 #

Assume 4 Beams and 2 Channels to support the Load, with each channel supporting ($\frac{1}{2}$) the equivalent Beam Load.

Load per Beam = 169,000 ÷ 5 = 33,800 #

Moment = M = SZ = $\frac{WL}{8}$

$$Z = \frac{WL}{8S} = \frac{33,800 \times 127}{8 \times 16,000} = 33.5 \text{ IN}^3$$

Use 12" × 8" × 40# Beam. Z = 51.9 IN³

Allowable Load per Beam

$$W = \frac{8SZ}{L} = \frac{8 \times 16000 \times 51.9}{127} = 52,300 \#$$

E2

WAR DEPARTMENT

U. S. ENGINEER OFFICE, PROVIDENCE, R. I.

Page 3

Subject Holyoke Dike

Computation Outlet #1 Gate

Computed by E H Brie Checked by HJK Date 4-18-39

U. S. GOVERNMENT PRINTING OFFICE 3—10528

Spacing of Beams to be arranged to carry a proportionate share of the Load.

W = Hd x Length Pressure Area x Width Pressure Area x 62.5
= Allowable Load = 52,300 # per Beam

Width Pressure Area = Spacing (Y) = $\frac{52,300}{Hd. \times 62.5 \times 10.58} = \frac{79.2}{Hd.}$

1- $Y = \frac{79.2}{28.17} = 2.81'$

2- $Y = \frac{79.2}{25.36} = 3.12'$

3- $Y = \frac{79.2}{22.24} = 3.55'$

4- $Y = \frac{79.2}{18.69} = 4.22'$

5- $Y = \frac{79.2}{14.47} = 5.46'$

Since the spacing of Beams, originally selected is less than the permissible maximum spacing given above, these spacings shall be maintained as follows:

1 - Y = 1.94 = 1'-11½"

2 - Y = 2.09 = 2'-1"

3 - Y = 2.28 = 2'-3¼"

4 - Y = 2.51 = 2'-6"

5 - Y = 2.85 = 2'-10¼"

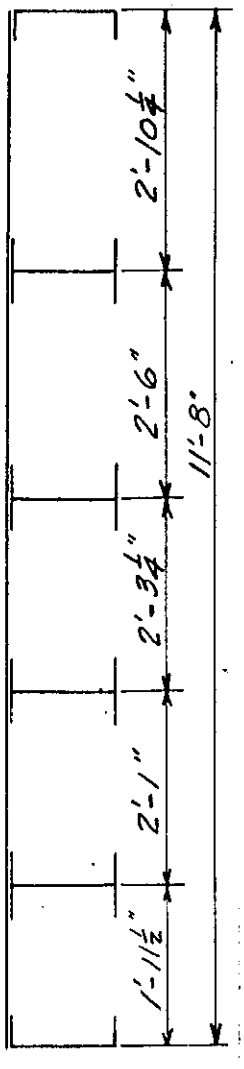

E3

Subject Holyoke Dike
Computation Outlet #1 Gate
Computed by EHBrie Checked by HJK Date 4-18-39

U. S. GOVERNMENT PRINTING OFFICE 3—10528

Load on bottom channel:

$W = 0.975 \times 10.58 \times 62.5 \times 28.17 = 18,200^{\#}$

$Z = \frac{WL}{8S} = \frac{18200 \times 127}{8 \times 16000} = 18.07 \text{ IN.}^3$

Use 12"×4"×35# Ship channel $Z = 35.8 \text{ IN}^3$

Note: Size of channel is required by structural design rather than Load requirements, viz: 12" depth to equal beam depth, and 4" flange for 4" Wide seal strip.

Load on skin Plate:

A = Lower Panel:

$W = 10.58 \times 1.52 \times 62.5 \times 28.17 = 28,400^{\#}$

$= \frac{2.675 t^2 (L^2 + l^2)}{L l}$ (Fixed Plate)

$L = 126 \quad l = 18.25$

$t^2 = \frac{WL l}{2.675(L^2 + l^2)} = \frac{28400 \times 126 \times 18.25}{2.67 \times 16000 (\overline{126}^2 + \overline{18.25}^2)}$

16234

$t^2 = .094"$

$t = .306"$

B - Upper Panel

$W = 10.58 \times 2.39 \times 62.5 \times 19.52 = 31,000^{\#}$

$= \frac{2.675 t^2 (L^2 + l^2)}{L l}$

$L = 126" \quad l = 28.75"$

$t^2 = \frac{WL l}{2.675(L^2 + l^2)} = \frac{31,000 \times 126 \times 28.75}{2.67 \times 16000 (\overline{126}^2 + \overline{28.75}^2)}$

16726

$t^2 = .1575$

$t = .397"$

Use 7/16" skin plate

WAR DEPARTMENT

U. S. ENGINEER OFFICE, PROVIDENCE, R. I.

Subject: Holyoke Dike

Computation: Outlet #1 Gate

Computed by: F.P. McDonough Checked by: E.H. Bye Date: 2-23-39

U. S. GOVERNMENT PRINTING OFFICE 3—10588

Part Name	No. Req'd	Mat'l	Unit Wt.	Size	Length Unit	Length Total	Weight
Beams	4	St	40#/f	12"x8"	10'-11	43'-8	1740
Channels	2	St	35#/f	12"x4	10'-11	21'-10	760
Bracing Pls.	2	St	20.4#/f	½ x 9	11'-5	22'-10"	350
Frame Ls	60	St	12.8#/f	4x4x½	0'-9"	45'	575
Skin Pl.	1	St	17.85#/f	7/16 x 11'-0"	11'-8"	11'-8	2300
Side Pls.	2	St.	17.85#/f	7/16 x 12¼	11'-8"	23'-4	420
Bracing Ls	4	St.	12.8#/f	4x4x½	8'-8"	34'-8	424
Seal Strips Top + Bottom	2	Bronze	5.58#/f	3/8 x 4	10'-4"	20'-8	115
Seal Strips sides	2	Bronze	5.58#/f	3/8 x 4	11'-8"	23'-6	130
Rubbing Shoes	6	W.I.	16.8#/f	1¼ x 4	3'-0"	18'-0	295
Bottom Shoes	3	St.	13.4#/f	2x2	1'-0"	3'	40
Roller Assembly	4	St.	50#	—	—		200
Hoisting Ls	4	St	16.2#/f	6x4x½	0-9"	3'	48
Lifting Ls	4	St	19.6#/f	6x6x½	0-9"	3'	58
Bracing Ls	2	St.	25#/f	9" Ship	2'-9"	5'-6	135
Bracing Ls	4	St	12.8#/f	4x4x½	0-9	3'	38
Butt Straps	2	St	20.4#/f	½ x 6	11'-8"	23'-4	235
Asphalt							200
Total Weight	+ 100# Rivet Hds				E5		8164

WAR DEPARTMENT

U. S. ENGINEER OFFICE, PROVIDENCE, R. I.

Subject: Holyoke Dike

Computation: Outlet #1 Gate Center of Gravity = 8.72"

Computed by: F.P. McDonough Checked by: HJK Date: 2-25-39

U.S. GOVERNMENT PRINTING OFFICE 3—10538

Datum Plane is the outside face of Seal Strip

Part Name	Weight	Dist Y	Moment
Beams	1740	6.4	11136
Channels	760	6.37	4849
Bracing PLs	350	6.37	2231
Frame Ls	575	6.37	3666
Skin PL	2300	12.72	29256
Side PLs	420	6.37	2672
Bracing Ls	212	11.36	2385
Bracing Ls	212	1.56	331
Rubbing Shoes	295	13.56	4000
Bottom Shoes	40	6.37	255
Roller Assembly	200	15	3000
Hoisting Ls	48	6.37	306
Lifting Ls	58	6.37	370
Bracing Cs	135	6.37	860
Bracing Ls	38	6.37	245
Butt Straps	235	13.19	3100
Asphalt	200	6.38	1276
Rivet Hds.	100	12	1200
Seal Strips	245	0.18	45
Totals	8164		71183

$Y = 71183 \div 8164 = 8.72''$

E6

WAR DEPARTMENT

U. S. ENGINEER OFFICE, PROVIDENCE, R. I.

Page 7

Subject Holyoke Dike

Computation Outlet #1 Gate Guide

Computed by E H Brie Checked by HJK Date 4-3-39

U. S. GOVERNMENT PRINTING OFFICE 3—10528

Part Name	No. Req'd.	Mat'l	Unit Wt.	Size	Length Unit	Length Total	Weight #
Vert. [s	4	St.	21.4#/f	8×3½	28'-0"	112'	2398
Horiz. [s	2	St.	18#/f	6×3½	10'-0"	20'	360
Sill [	1	St.	30.9#/f	12×3½	11'-4"	11.33'	351
Connecting Angle	8	St	19.6#/f	6×6×½	3½"	2.33'	46
Connecting Angle	2	St	12.8#/f	4×4×½	9"	1.5'	19
Connecting Angle	4	St	11.1#/f	3½×3½×½	5"	1.66	19
Anchor	76	St.	2.55#/f	3/8×2	18"	114'	291
Side Plate	2	St	20.4#/f	½×22 3/8	28'-0"	56'	2120
Vert. Backing Plate	2	St	6.80#/f	½×4	12'-10½	25.75'	175
Horiz. Backing Plate	2	St.	5.10#/f	½×3	9'-11 7/8	20'	102
Vert. Seal Strip	2	Bronze	6.27#/f	3/8×4½	12'-10½	25.75'	162
Horiz. Seal Strip	2	Bronze	6.27#/f	3/8×4½	10-2 9/16	20.43'	129
Vert. Guide Plate	2	St.	5.74#/f	3/8×4½	14'-6"	29'	168
Rubbing Plate	2	St.	7.65#/f	½×4½	27'-4½	54.75'	420
Total Weight				+ 50# Rivet Hds + Weld			6804 ✓

E7

WAR DEPARTMENT

U. S. ENGINEER OFFICE, PROVIDENCE, R. I.

Page 1

Subject: Holyoke Dike

Computation: Outlet #4 Gate

Computed by: E H Blue Checked by: H J K Date: 4-18-39

U. S. GOVERNMENT PRINTING OFFICE 3—10628

Basis of Gate Design:

Area of Gate, upon which Pressure Head of Water acts, to be considered the ℄-℄ of Seal Strips. Gate members to be considered as Simple Beams with ℄ of Supports at ℄ of Seal Strips. Pressure Head is computed with Water Level at Top of Wall with Conduit on Seal Side of Gate unwatered.

Given:

Elev. of Top of Wall	= 80.00
Elev. of Bottom Sill	= 51.50
Elev. of Bottom of Conduit	= 52.00
Elev. of Top of Conduit	= 64.00
Conduit Opening	= 14'-0" Wide x 12'-0" High
Size of Gate	= 15'-0" Wide x 12'-8" High
No. of Gates required	= 2

Note: This Gate is applicable to Outlet No. 4 only.

WAR DEPARTMENT

U. S. ENGINEER OFFICE, PROVIDENCE, R. I.

Page 2

Subject Holyoke Dike

Computation Outlet #4 Gate

Computed by E H Brie Checked by HJR Date 3-10-39

U. S. GOVERNMENT PRINTING OFFICE 3—10528

Computations:

Mean Pressure Hd. on Gate = 22.00'

= 22.00 × 62.5 = 1375 #/□'

Load on Gate = 14.58 × 12.33 × 1375 = 248,000 #

Assume 4 Beams and 2 channels to support the Load with each channel supporting ½ equivalent Beam Load.

Load per Beam = 248,000 ÷ 5 = 49,600 #

Moment = M = SZ = $\frac{WL}{8}$

$Z = \frac{WL}{8S} = \frac{49600 \times 175}{8 \times 16000} = 67.8 \ IN^3$

Use 12 × 10 × 53 # Beam Z = 70.7

Allowable Beam Load:

$W = \frac{8SZ}{L} = \frac{8 \times 16000 \times 70.7}{175} = 51,700$ #

WAR DEPARTMENT

U. S. ENGINEER OFFICE, PROVIDENCE, R. I.

Subject: Holyoke Dike

Computation: Outlet #4 Gate

Computed by: E.H. Bric Checked by: H.J.K. Date: 3-10-39

U. S. GOVERNMENT PRINTING OFFICE 3—10588

Spacing of Beams to be arranged to carry a proportionate share of the Load

$W = Hd \times \text{Length Press. Area} \times \text{Width Press. Area} \times 62.5$
$= 51,700$ #

$\text{Width Pressure Area} = \text{Spacing}(Y) = \frac{51700}{Hd \times 62.5 \times 14.58} = \frac{56.7}{Hd.}$

1 – $Y = \frac{56.7}{28.17} = 2.02$

2 – $Y = \frac{56.7}{26.15} = 2.17$

3 – $Y = \frac{56.7}{23.98} = 2.37$

4 – $Y = \frac{56.7}{21.61} = 2.63$

5 – $Y = \frac{56.7}{18.98} = 2.99$

$\Sigma Y = 12.18$

Total Height $= 12'-8'' = 12.67''$

Correction Factor $= 12.67 \div 12.18 = 1.04$

1 – $Y = 2.02 \times 1.04 = 2.09' = 2'-1''$
2 – $Y = 2.17 \times 1.04 = 2.25' = 2'-3''$
3 – $Y = 2.37 \times 1.04 = 2.46' = 2'-5\frac{1}{2}''$
4 – $Y = 2.63 \times 1.04 = 2.75' = 2'-9''$
5 – $Y = 2.99 \times 1.04 = 3.12' = 3'-1\frac{1}{2}''$

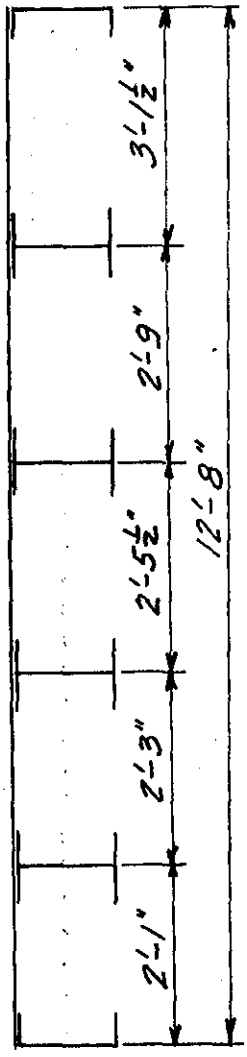

E 10

WAR DEPARTMENT

U. S. ENGINEER OFFICE, PROVIDENCE, R. I.

Page 4

Subject: Holyoke Dike

Computation: Outlet #4 Gate

Computed by: E H Brown Checked by: H J R Date: 3-10-39

U. S. GOVERNMENT PRINTING OFFICE 3—10638

Load on Bottom channel

$W = 1.04 \times 14.58 \times 62.5 \times 28.17 = 26700^{\#}$

$Z = \frac{WL}{8S} = \frac{26700 \times 175}{8 \times 16000} = 36.6 \text{ IN}^3$

Use 12"×4"×40# Ship Channel $Z = 38.8 \text{ IN}^3$

Load on Skin Plate Upper Panel

$W = 14.5 \times 2.69 \times 62.5 \times 18.80 = 45{,}600^{\#}$

$= \frac{2.675 t^2 (L^2 + l^2)}{L l}$ (Fixed Plate Formula)

$L = 174 \quad l = 32.25$

$t^2 = \frac{WLl}{2.675(L^2 + l^2)} = \frac{45600 \times 174 \times 32.25}{2.67 \times 16000 (\underbrace{174^2 + 32.25^2}_{31276})} = .198$

$t = .445''$

Use $\frac{1}{2}''$ skin plate

E 11

WAR DEPARTMENT

U. S. ENGINEER OFFICE, PROVIDENCE, R. I.

Subject Holyoke Dike

Computation Outlet #4 Gate

Computed by F.P. McDonough **Checked by** E.H. Pyne **Date** 2-23-39

U. S. GOVERNMENT PRINTING OFFICE 3—10528

Part Name	No. Req'd	Mat'l	Unit Wt.	Size	Length Unit	Length Total	Weight
Beams	4	St.	53#/f	12×10	14'-11	59-8	3162
Channels	2	St.	40#/f	12×4	14'-11	29-10	1193
Bracing Pls	2	St	20.4#/f	½×9	12'-4	24'-8	381
Frame Ls	60	St	12.8#/f	4×4×½	0-9	45'	575
Skin Pl.	1	St	20.4#/f	½×15'-0"	12'-8"	12'-8"	3877
Side Pls	2	St	20.4#/f	½×12 5/16	12'-8	25'-4	533
Bracing Ls	4	St	12.8#/f	4×4×½	8'-3	33'	418
Seal Strips Top + Bottom	2	Bronze	5.58#/f	3/8×4	14'-4	28'-8	158
Seal Strips Sides	2	Bronze	5.58#/f	3/8×4	12'-8	25-4	138
Rubbing Shoes	6	W.I.	16.8#/f	1½×4	3'-0"	18'	295
Bottom Shoes	3	St	13.4	2×2	1'-0"	3'	40
Roller Assembly	4	St	50#	—	—		200
Hoisting Ls	4	St	16.2#/f	6×4×½	9"	3'	48
Lifting Ls	4	St	19.6#/f	6×6×½	9	3'	58
Bracing Es	2	St	25#/f	9" Ship	3'-0	6'	150
Bracing Ls	4	St.	12.8#/f	4×4×½	9"	3'	38
Butt Straps	2	St	20.4#/f	½×8	12'-8	25'-4"	340
Asphalt							300
Total Weight + 100# Rivet Hds (E 12)							11999#

WAR DEPARTMENT

U. S. ENGINEER OFFICE, PROVIDENCE, R. I.

Subject Holyoke Dike

Computation Outlet #4 Gate Center of Gravity - 8.92"

Computed by F.P. McDonough **Checked by** E.H. Bue **Date** 2-23-39

U.S. GOVERNMENT PRINTING OFFICE 9—10538

Datum Plane is the outside face of Seal Strip

Part Name	Weight	Dist. Y	Moment
Beams	3162	6.50	20553
Channels	1193	6.38	7611
Bracing Pls	381	6.38	2431
Frame Ls	575	6.38	3668
Skin Pl	3877	12.81	49664
Side Pls	533	6.40	3411
Bracing Ls	209	11.38	2379
Bracing Ls	209	1.56	326
Rubbing Shoes	295	13.68	4030
Bottom Shoes	40	6.38	255
Roller Assembly	200	15.00	3000
Hoisting Ls	48	6.38	306
Lifting Ls	58	6.38	370
Bracing Ls	150	6.38	924
Bracing Ls	38	6.38	245
Butt Straps	340	13.31	4525
Seal Strips	296	0.18	56
Asphalt	300	6.38	1914
Rivet Hds.	100	12.00	1200
Totals	11999		106868

$Y = 106,868 \div 11,999 = 8.92''$

E 13

WAR DEPARTMENT

U. S. ENGINEER OFFICE, PROVIDENCE, R. I.

Page 7

Subject Holyoke Dike

Computation Outlet #4 Gate Guide

Computed by E H Brie Checked by HJK Date 4-3-39

U. S. GOVERNMENT PRINTING OFFICE 3—10528

Part Name	No. Req'd.	Mat'l	Unit Wt.	Size	Length Unit	Length Total	Weight
Vertical Channel	4	St.	21.4#/f	8"x3½"	28-0"	112'	2404
Horizontal Channel	2	St.	18#/f	6"x3½"	14'-0"	28'	505
Sill Channel	1	St.	30.9#/f	12"x3½"	15'-4"	15.33'	475
Connecting Angle	8	St.	19.6#/f	6x6x½	3½"	2.33'	46
Connecting Angle	2	St.	12.8#/f	4x4x½	9"	1.5'	19
Connecting Angle	5	St.	11.1#/f	3½x3½x½	5"	2.08'	23
Anchor	84	St.	2.55#/f	3/8"x2"	18"	126'	322
Side Plate	2	St.	20.4#/f	½"x22½	28'-0"	56'	2150
Vertical Backing Plate	2	St.	6.80#/f	½"x4	13'-10½	27.75'	189
Horizontal Backing Plate	2	St.	5.10#/f	½x3	13'-11⅞"	28'	143
Vertical Seal Strip	2	Bronze	6.27#/f	3/8x4½	13'-10½	27.75'	175
Horizontal Seal Strip	2	Bronze	6.27#/f	3/8x4½	14'-2 7/16	28.41'	179
Vertical Guide Plate	2	St.	5.74#/f	3/8x4½	13'-6"	27'	156
Rubbing Plate	2	St.	7.65#/f	½x4½	27'-4½	54.75	422
Total Weight				+75# Rivet Hds + Weld			7283 ✓

E 14

WAR DEPARTMENT

U. S. ENGINEER OFFICE, PROVIDENCE, R. I.

Page .....

Subject .....

Computation .....

Computed by ..... **Checked by** ..... **Date** .....

U. S. GOVERNMENT PRINTING OFFICE 3—10538

This Gate is applicable to Outlets No. 6 and No. 9. The design is based on the Max. Head of 38.00 Ft. at Outlet No. 6.

WAR DEPARTMENT

U. S. ENGINEER OFFICE, PROVIDENCE, R. I.

Page 1

Subject Holyoke Dike

Computation Outlet #6 Gate

Computed by E H Brie Checked by NJK Date 3-13-39

U. S. GOVERNMENT PRINTING OFFICE 3—10528

Basis of Gate Design:

Area of Gate, upon which Pressure Head of Water acts, to be considered the ℄-℄ of Seal Strips. Gate members to be considered as Simple Beams with ℄ of Supports at ℄ of Seal Strips. Pressure Head is computed with Water Level at Top of Wall, with Conduit on Seal Side of Gate unwatered.

Given:

Elev. of Top of Wall	= 79.83
Elev. of Bottom Sill	= 41.50
Elev. of Bottom of Conduit	= 42.00
Elev. of Top of Conduit	= 54.00
Conduit Opening	= 14'-0" Wide x 12'-0" High
Size of Gate	= 15'-0" Wide x 12'-8" High
No. of Gates required	= 1

Note: Structural members and Construction of Gates at Outlets #6 and 9 are identical.

WAR DEPARTMENT

U. S. ENGINEER OFFICE, PROVIDENCE, R. I.

Page 2

Subject Holyoke Dike

Computation Outlet #6 Gate

Computed by E H Brie Checked by HJR Date 3-13-39

U. S. GOVERNMENT PRINTING OFFICE 3—10688

Computations.

Mean Pressure Hd. on Gate = 31.83'
= 31.83 × 62.5 = 1990 #/□'

Load on Gate = 14.58 × 12.33 × 1990 = 356,000 #

Assume 4 Beams and 2 Channels to support the Load with each channel supporting ½ equivalent Beam Load

Load per Beam = 356,000 ÷ 5 = 71,200 #

Moment = M = SZ = $\frac{WL}{8}$

$Z = \frac{WL}{8S} = \frac{71200 \times 175}{8 \times 16000} = 97.4 \text{ IN}^3$

Use 12" × 12 × 72# Beam Z = 97.5 IN³

Allowable Beam Load:

$W = \frac{8SZ}{L} = \frac{8 \times 16000 \times 97.5}{175} = 71400\#$

E 17

WAR DEPARTMENT

U. S. ENGINEER OFFICE, PROVIDENCE, R. I.

Subject: Holyoke Dike

Computation: Outlet #9 Gate

Computed by: E H Brie Checked by: H J K Date: 3-13-39

U. S. GOVERNMENT PRINTING OFFICE 3—10528

Basis of Gate Design:

Area of Gate, upon which Pressure Head of Water acts to be considered, the ℄-℄ of Seal Strips. Gate members to be considered as Simple Beams with ℄ of supports at ℄ of Seal Strips. Pressure Head is computed with Water Level at Top of Wall with conduit on Seal Side of Gate unwatered.

Given:

Elev. of Top of Wall	= 77.33
Elev. of Bottom Sill	= 40.50
Elev. of Bottom of Conduit	= 41.00
Elev. of Top of Conduit	= 53.00
Conduit Opening	= 14'-0" Wide x 12'-0" High
Size of Gate	= 15'-0" Wide x 12'-8" High
No. of Gates required	= 1

Note:
Structural members and construction, of Gates at Outlets #6 and 9 are identical.

WAR DEPARTMENT

U. S. ENGINEER OFFICE, PROVIDENCE, R. I.

Page 4

Subject Holyoke Dike

Computation Outlet #9 Gate

Computed by EHBlue Checked by HJR Date 3-13-39

U. S. GOVERNMENT PRINTING OFFICE 3—10538

Computations:

Mean Pressure Hd. on Gate = 30.33'
= 30.33 x 62.5 = 1896 #/□'

Load on Gate = 14.58 x 12.33 x 1896 = 339,500 #

Assume 4 Beams and 2 Channels to support the Load with each channel supporting ½ equivalent Beam Load

Load per Beam = 339,500 ÷ 5 = 67,900 #

Moment = M = SZ = $\frac{WL}{8}$

$Z = \frac{WL}{8S} = \frac{67900 \times 175}{8 \times 16000} = 92.7 \text{ IN.}^3$

Use 12 x 12 x 72 # Beam Z = 97.5 IN³

Allowable Beam Load:

$W = \frac{8SZ}{L} = \frac{8 \times 16000 \times 97.5}{175} = 71400$ #

WAR DEPARTMENT

U. S. ENGINEER OFFICE, PROVIDENCE, R. I.

Page 5

Subject: Holyoke Dike

Computation: Outlets #6 - #9 Gates

Computed by: E.H. Bree Checked by: HGK Date: 3-13-39

U. S. GOVERNMENT PRINTING OFFICE 9—10528

Spacing of Beams to be arranged to carry a proportionate share of the Load.

W = Hd x Length Press. Area x Width Press. Area x 62.5
= 71,400 #

Width Press. Area = Spacing (Y) = $\frac{71400}{Hd \times 14.58 \times 62.5} = \frac{78.3}{Hd.}$

1 - Y = $\frac{78.3}{38.00}$ = 2.06

2 - Y = $\frac{78.3}{35.94}$ = 2.18

3 - Y = $\frac{78.3}{33.76}$ = 2.32

4 - Y = $\frac{78.3}{31.44}$ = 2.49

5 - Y = $\frac{78.3}{28.95}$ = 2.70

ΣY = 11.75

Total Height = 12'-8" = 12.67

Correction Factor = 12.67 ÷ 11.75 = 1.075

1 - Y = 2.14 = 2'-1 5/8"
2 - Y = 2.35 = 2'-4 1/8"
3 - Y = 2.48 = 2'-5 3/4"
4 - Y = 2.72 = 2'-8 1/2"
5 - Y = 3.00 = 3'-0"

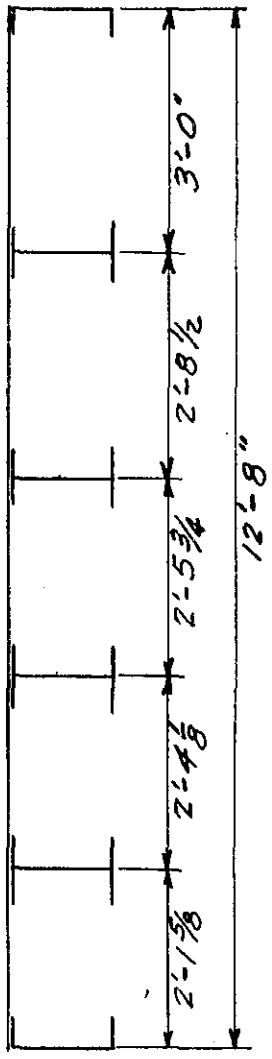

Note: Since the Hd. on the Gate in Outlet #9 is 1.50' less than that on Gate in Outlet #6 the Beam spacing shown above will be used for Gates at both Outlets.

Subject Holyoke Dike
Computation Outlets #6 - #9 Gates
Computed by E.H. Brie Checked by HJR Date 3-13-39

U. S. GOVERNMENT PRINTING OFFICE 3—10088

Load on Bottom Channel - Using Press. Hd. Outlet #6

$W = 1.07 \times 14.58 \times 62.5 \times 38.00 = 37200\#$

$Z = \frac{WL}{8S} = \frac{37200 \times 175}{8 \times 16000} = 50.8 \text{ IN}^3$

Use 12x4 x 50# Ship Channel $Z = 44.6 \text{ IN}^3$

Note: This is the largest 12" Ship Channel available

$S = \frac{WL}{8Z} = \frac{37200 \times 175}{8 \times 44.6} = 18{,}200 \#/\square''$

Load on Skin Plate Upper Panel

$W = 2.52 \times 14.5 \times 62.5 \times 28.50 = 65000\#$

$= \frac{2.67\, St^2 (L^2 + l^2)}{Ll}$ (Fixed Plate Formula)

$L = 174 \quad l = 30.25$

$t^2 = \frac{WLl}{2.67\, S(L^2 + l^2)} = \frac{65000 \times 174 \times 30.25}{2.67 \times 16000 (\underbrace{174^2 + 30.25^2}_{31215})} = .256$

$t = .506''$

Use $\frac{1}{2}''$ skin plate

WAR DEPARTMENT

U. S. ENGINEER OFFICE, PROVIDENCE, R. I.

Subject: Holyoke Dike

Computation: Outlets #6-9 Gates

Computed by: F.P. McDonough Checked by: E.H. Bue Date: 2-25-39

U. S. GOVERNMENT PRINTING OFFICE 8—10538

Part Name	No. Req'd	Mat'l	Unit Wt.	Size	Length Unit	Length Total	Weight
Beams	4	St	72#/f	12x12	14'-11	59-8	4296
Channels	2	St.	50#/f	12x4	14'-11	29-10	1491
Bracing Pls	2	St.	20.4#/f	½x9	12'-4	24-8	378
Frame Ls	60	St	12.8#/f	4x4x½	0-9"	45'	575
Skin Pl.	1	St.	20.4#/f	½x15'-0	12'-8	12'-8	3877
Side Pls	2	St.	20.4#/f	½x12½	12'-8	25-4	538
Bracing Ls	4	St.	12.8#/f	4x4x½	7'-9"	31'-0"	398
Seal Strips Top + Bottom	2	Bronze	5.58#/f	3/8x4	14'-4	28'-8"	158
Seal Strips Sides	2	Bronze	5.58#/f	3/8x4	12'-8	25'-4	138
Rubbing Shoes	6	M.I.	16.8#/f	1¼x4	3'-0	18'	295
Bottom Shoes	3	St.	13.4#/f	2x2	1-0	3'	40
Roller Assembly	4	St.	50#				200
Hoisting Ls	4	St.	16.2#/f	6x4x½	0-9	3'	48
Lifting Ls	4	St.	19.6	6x6x½	0-9	3'	58
Bracing Es	2	St.	25#/f	9" Ship	2'-10½	5'-9"	144
Bracing Ls	4	St.	12.8#/f	4x4x½	0-9	3	38
Butt Straps	2	St.	20.4#/f	½x8	12'-8"	25'-4	340
Asphalt							321
Total Weight					E22		13433

WAR DEPARTMENT

U. S. ENGINEER OFFICE, PROVIDENCE, R. I.

Page 8

Subject Holyoke Dike

Computation Outlets #6 - #9 Center Gravity = 8.74

Computed by F.P. McDonough Checked by E.H. Tyne Date 2-25-39

U.S. GOVERNMENT PRINTING OFFICE 9—10698

Datum Plane is the outside face of Seal Strip

Part Name	Weight	Dist. Y	Moment
Beams	4296	6.56	28183
Channels	1491	6.38	9516
Bracing Pls	378	6.38	2412
Frame Ls	575	6.38	3669
Skin Pl	3877	13.00	50401
Side Pls	538	6.50	3497
Bracing Ls	199	11.57	2302
Bracing Ls	199	1.56	310
Rubbing Shoes	295	13.88	4091
Bottom Shoes	40	6.38	255
Roller Assembly	200	15.00	3000
Hoisting Ls	48	6.38	306
Lifting Ls	58	6.38	370
Bracing Ls	144	6.56	944
Bracing Ls	38	6.56	250
Butt Straps	340	13.50	4590
Seal Strips	296	0.18	56
Asphalt	321	6.38	2048
Rivet Hds	100	12.00	1200
Totals	13433		117400

$Y = 117400 \div 13433 = 8.74$

E 23

WAR DEPARTMENT

U. S. ENGINEER OFFICE, PROVIDENCE, R. I.

Page 9

Subject: Holyoke Dike

Computation: Outlet #6 Gate Guide

Computed by: E. H. Brue Checked by: HGK Date: 4-3-39

U. S. GOVERNMENT PRINTING OFFICE 3—10528

Part Name	No. Req'd	Mat'l	Unit Wt.	Size	Length Unit	Length Total	Weight
Vertical Channel	4	St.	21.4#/f	8×3½	37'-10"	151.33'	3246
Horizontal Channel	2	St.	18#/f	6×3½	14'-0"	28'	505
Sill Channel	1	St.	30.9#/f	12×3½	15'-4"	15.33'	475
Connecting Angle	8	St.	19.6#/f	6×6×½	3½"	2.33'	46
Connecting Angle	2	St.	12.8#/f	4×4×½	9"	1.5'	19
Connecting Angle	5	St.	11.1#/f	3½×3½×½	5"	2.08'	23
Anchor	104	St.	2.55#/f	3/8×2	18"	156'	400
Side Plate	2	St.	20.4#/f	½×22 5/8	37'-10"	75.67'	2920
Vert. Backing Plate	2	St.	6.80#/f	½×4	13'-10½	27.75'	189
Horiz. Backing Plate	2	St.	5.10#/f	½×3	13'-11⅞	28'	143
Vert. Seal Strip	2	Bronze	6.27#/f	3/8×4½	13'-10½	27.75'	175
Horiz. Seal Strip	2	Bronze	6.27#/f	3/8×4½	14'-2 7/16	28.41'	179
Vert. Guide Plate	2	St.	5.74#/f	3/8×4½	23'-4"	46.67'	268
Rubbing Plate	2	St.	7.65#/f	½×4½	37'-2½	74.42'	570
Total Weight						+ 100# for Rivet Hds + Weld	9258 ✓

E 24

WAR DEPARTMENT

U. S. ENGINEER OFFICE, PROVIDENCE, R. I.

Page 10

Subject Holyoke Dike

Computation Outlet #9 Gate Guide

Computed by E H Bree Checked by HJK Date 4-3-39

U. S. GOVERNMENT PRINTING OFFICE 3—10538

Part Name	No. Req'd	Mat'l	Unit Wt.	Size	Length Unit	Length Total	Weight
Vert. Channel	4	St.	21.4#/f	8 x 3½	36'-4	145.33'	3109
Horiz. Channel	2	St.	18#/f	6 x 3½	14'-0"	28'	505
Sill Channel	1	St.	30.9#/f	12 x 3½	15'-4"	15.33'	475
Connecting Angle	8	St.	19.6#/f	6 x 6 x ½	3½"	2.33'	46
Connecting Angle	2	St.	12.8#/f	4 x 4 x ½	9"	1.5	19
Connecting Angle	5	St.	11.1#/f	3½ x 3½ x ½	5"	2.08'	23
Anchor	104	St.	2.55#/f	3/8 x 2	18"	156'	398
Side Plate	2	St.	20.4#/f	½ x 22 5/8	36'-4"	72.67'	2810
Vertical Backing Plate	2	St.	6.80#/f	½ x 4	13'-10½	27.75'	189
Horiz. Backing Plate	2	St.	5.10#/f	½ x 3	13'-11 7/8	28'	143
Vert. Seal Strip	2	Bronze	6.27#/f	3/8 x 4½	13'-10½	27.75'	175
Horiz. Seal Strip	2	Bronze	6.27#/f	3/8 x 4½	14'-2 7/16	28.41	179
Vert. Guide Plate	2	St.	5.74#/f	3/8 x 4½	21'-10"	43.67'	252
Rubbing Plate	2	St.	7.65#/f	½ x 4½	35'-8½	71.42'	547
Total Weight			+100# for Rivet Hds + weld				8970 ✓

E 25

WAR DEPARTMENT

U. S. ENGINEER OFFICE, PROVIDENCE, R. I.

Page .....

Subject .....

Computation .....

Computed by ..... Checked by ..... Date .....

U. S. GOVERNMENT PRINTING OFFICE 3—10538

This Gate is applicable to Outlets No. 7 - No. 8A and No. 11. The design is based on the Max. Head of 37.59 Ft. at Outlet No. 8A

WAR DEPARTMENT

U. S. ENGINEER OFFICE, PROVIDENCE, R. I.

Page 1

Subject: Holyoke Dike

Computation: Outlet # 7 Gate

Computed by: E H Bua Checked by: H J K Date: 4-4-39

U. S. GOVERNMENT PRINTING OFFICE 3—10528

Basis of Design:

Area of Gate, upon which Pressure Head of Water acts, to be considered the ℄-℄ of Seal Strips. Gate members to be considered as simple Beams with ℄ of Supports at ℄ of Seal Strips. Pressure Head is Computed with Water Level at Top of Wall and with conduit on Seal side of Gate unwatered.

Given:

Elev. of Top of Wall	= 78.92
Elev. of Bottom Sill	= 41.50
Elev. of Bottom of Conduit	= 42.00
Elev of Top of Conduit	= 53.00
Conduit Opening	= 13'-0" Wide x 11'-0" High
Size of Gate	= 14'-0" Wide x 11'-8" High
No. of Gates	= 3

WAR DEPARTMENT

U. S. ENGINEER OFFICE, PROVIDENCE, R. I.

Page 2

Subject: Holyoke Dike

Computation: Outlet #7 Gate

Computed by: E.H. Bruce Checked by: HJK Date: 4-4-39

U. S. GOVERNMENT PRINTING OFFICE 9—10628

Computations:

Mean Pressure Hd. on Gate = 31.42'
= 31.42 × 62.5 = 1965 #/#

Load on Gate = 13.58 × 11.33 × 1965 = 303,000 #

Assume 4 Beams and 2 channels to support the Load with each channel supporting ½ equivalent Beam Load.

Load per Beam = 303,000 ÷ 5 = 60,600 #

Moment = $M = SZ = \frac{WL}{8}$

$Z = \frac{WL}{8S} = \frac{60{,}600 \times 163}{8 \times 16000} = 77.3 \text{ IN}^3$

Use 12"×12"×65# Beam $Z = 88 \text{ IN}^3$

Allowable Beam Load

$W = \frac{8SZ}{L} = \frac{8 \times 16000 \times 88}{163} = 69000$ #

Subject Holyoke Dike
Computation Outlet #8A Gate
Computed by E.A. Bree Checked by HJK Date 4-4-39

U. S. GOVERNMENT PRINTING OFFICE 3—10528

Basis of Gate Design:

Area of Gate, upon which Pressure Head of Water acts to be considered the ℄-℄ of seal strips. Gate members to be considered Simple Beams with ℄ of supports at ℄ of seal strips. Pressure Head is computed with Water Level at Top of Wall and with conduit on seal side of Gate unwatered.

Given:

Elev. of Top of Wall	= 78.42
Elev. of Bottom Sill	= 40.50
Elev. of Bottom of Conduit	= 41.00
Elev. of Top of Conduit	= 52.00
Conduit Opening	= 13'-0" Wide x 11'-0" High
Size of Gate	= 14'-0" Wide x 11'-8 High
No. of Gates required	= 1

WAR DEPARTMENT

U. S. ENGINEER OFFICE, PROVIDENCE, R. I.

Subject: Holyoke Dike

Computation: Outlet #8A Gate

Computed by: E H Brue Checked by: H J R Date: 4-4-39

U. S. GOVERNMENT PRINTING OFFICE 3—10628

Computations:

Mean Pressure Hd. on Gate $= 31.92'$
$= 31.92 \times 62.5 = 2000$ #/□

Load on Gate $= 13.58 \times 11.33 \times 2000 = 308{,}300$ #

Assume 4 Beams and 2 Channels to support the Load with each channel supporting ½ the equivalent Beam Load.

Load per Beam $= 308{,}300 \div 5 = 61{,}600$ #

Moment $= M = SZ = \frac{WL}{8}$

$Z = \frac{WL}{8S} = \frac{60{,}000 \times 163}{8 \times 16000} = 78.8 \text{ IN}^3$

Use 12"x 12" x 65 # Beam $Z = 88 \text{ IN}^3$

Allowable Beam Load

$W = \frac{8SZ}{L} = \frac{8 \times 16000 \times 88}{163} = 69000$ #

WAR DEPARTMENT

U. S. ENGINEER OFFICE, PROVIDENCE, R. I.

Subject: Holyoke Dike

Computation: Outlet #11 Gate

Computed by: E H Bue Checked by: H J K Date: 4-4-39

U. S. GOVERNMENT PRINTING OFFICE 3—10528

Basis of Gate Design:

Area of Gate, upon which Pressure Head of Water acts, to be considered the ℄-℄ of Seal Strips. Gate members to be considered as simple Beams with ℄ of Supports at ℄ of Seal Strips. Pressure Head is Computed with Water Level at Top of Wall and with Conduit on Seal Side of Gate unwatered.

Given:

Elev. of Top of Wall	= 76.50
Elev. of Bottom Sill	= 40.50
Elev. of Bottom of Conduit	= 41.00
Elev. of Top of Conduit	= 52.00
Conduit Opening	= 13'-0" Wide × 11'-0" High
Size of Gate	= 14'-0" Wide × 11'-8" High
No. of Gates required	= 1

WAR DEPARTMENT

U. S. ENGINEER OFFICE, PROVIDENCE, R. I.

Page 6

Subject Holyoke Dike

Computation Outlet #11 Gate

Computed by E H Bris Checked by NJR Date 4-4-39

U. S. GOVERNMENT PRINTING OFFICE 3—10528

Computations:

Mean Pressure Hd. on Gate = 30'
= 30 x 62.5 = 1875 #/□'

Load on Gate = 13.58 x 11.33 x 1875 = 290,000 #

Assume 4 Beams and 2 channels to support the Load with each channel supporting ½ the equivalent Beam Load.

Load per Beam = 290,000 ÷ 5 = 58,000 #

Moment = M = SZ = $\frac{WL}{8}$

$Z = \frac{WL}{8S} = \frac{58,000 \times 163}{8 \times 16000} = 74 \text{ IN}^3$

Use 12 x 12 x 65# Beam Z = 88 IN³

Allowable Beam Load

$W = \frac{8SZ}{L} = \frac{8 \times 16000 \times 88}{163} = 69000$ #

WAR DEPARTMENT

U. S. ENGINEER OFFICE, PROVIDENCE, R. I.

Page 7

Subject Holyoke Dike

Computation Outlets #7-8A-11 Gates

Computed by E H Brie Checked by HJK Date 4-4-39

U. S. GOVERNMENT PRINTING OFFICE 3—10628

Spacing of Beams to be arranged to carry a proportionate share of the Load.

W = Hd. x Length Press. Area x Width Press. Area x 62.5
= 69000 #

Width Press. Area = Spacing (Y) = $\frac{69000}{Hd. \times 13.58 \times 62.5} = \frac{81}{Hd.}$

1 - $Y = \frac{81}{37.59} = 2.15'$

2 - $Y = \frac{81}{34.81} = 2.28$

3 - $Y = \frac{81}{32.49} = 2.44$

4 - $Y = \frac{81}{30} = 2.64$

5 - $Y = \frac{81}{27.30} = 2.89$

$\Sigma Y = 12.40$

Total Gate Height = 11.67

Correction Factor = 11.67 ÷ 12.40 = .94

1 - $Y' = 2.15 \times .92 = 2.02 = 2'\text{-}0\frac{1}{4}''$

2 - $Y' = 2.15 = 2'\text{-}1\frac{3}{4}''$

3 - $Y' = 2.29 = 2'\text{-}3\frac{1}{2}''$

4 - $Y' = 2.48 = 2'\text{-}5\frac{3}{4}''$

5 - $Y' = 2.73 = 2'\text{-}8\frac{3}{4}''$

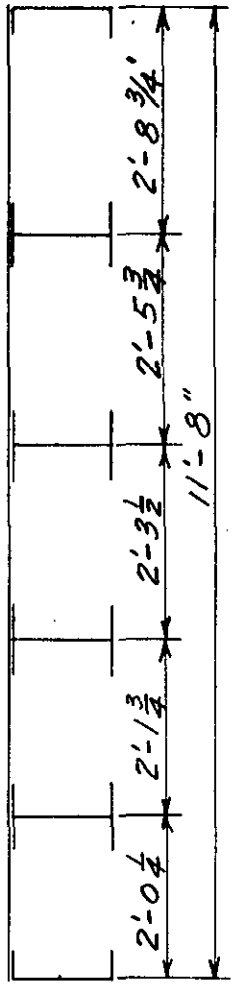

Note: Since the above spacing is made on basis of max. Hd and the Heads on Gates in three Outlets are within 2.00 Ft of each other the above spacing will be used for Gates at the three Outlets

E 33

WAR DEPARTMENT

U. S. ENGINEER OFFICE, PROVIDENCE, R. I.

Page 8

Subject Holyoke Dike

Computation Outlets #7-8A-11 Gates

Computed by E H Brie Checked by HJR Date 4-4-39

U. S. GOVERNMENT PRINTING OFFICE 3—10888

Load on Bottom Channel - Using Press. Hd. Outlet 8A

$W = 1.01 \times 13.58 \times 62.5 \times 37.59 = 32{,}300\ \#$

$Z = \frac{WL}{8S} = \frac{32300 \times 163}{8 \times 16000} = 41\ IN^3$

Use 12" × 4 × 48.6# Ship Channel $Z = 43.8\ IN^3$

Load on Skin Plate Upper Panel

$W = 2.25 \times 13.5 \times 62.5 \times 28.82 = 54300\ \#$

$= \frac{2.67 \times St^2(L^2+\ell^2)}{L\ell}$ (Fixed Plate Formula)

$L = 162"$ $\ell = 27"$

$t^2 = \frac{WL\ell}{2.67S(L^2+\ell^2)} = \frac{54300 \times 162 \times 27}{2.67 \times 16000 \times (\underbrace{\overline{162}^2 + \overline{27}^2}_{27030})} = .205$

$t = .454"$

Use ½" skin Plate.

WAR DEPARTMENT

U. S. ENGINEER OFFICE, PROVIDENCE, R. I.

Subject: Holyoke Dike

Computation: Outlets #7-8A-11 Gates

Computed by: F.P. McDonough Checked by: E.H. Zie Date: 2-28-39

U. S. GOVERNMENT PRINTING OFFICE 9—10598

Part Name	No. Req'd	Mat'l	Unit Wt.	Size	Length Unit	Length Total	Weight
Beams	4	St	65#/f	12x12	13'-11		3622
Channels	2	St	48.6#/f	12x4	13'-11		1350
Bracing Pls	2	St.	20.4#/f	½x9	11'-3		345
Frame Ls	60	St	12.8#/f	4x4x½	0-9	45'	575
Skin Pl.	1	St	20.4#/f	½x14'-0"	11'-8"	11'-8"	3340
Side Pls.	2	St	20.4#/f	½x12⅜	11'-8"		490
Bracing Ls	4	St	12.8#/f	4x4x½	6'-9	27'	346
Seal Strips Top + Bottom	2	Bronze	5.58#/f	3/8x4	13'-3	26'-6	148
Seal Strips Sides.	2	Bronze	5.58#/f	3/8x4	11'-8	23'-4	130
Rubbing Shoes	6	W.I.	16.8#/f	1¼x4	3'-0	18'	295
Bottom Shoe	3	St.	13.4#/f	2x2	1'-0	3'	40
Roller Assembly	4	St.	50#				200
Hoisting Ls	4	St	16.2#/f	6x4x½	0-9	3'	48
Lifting Ls	4	St.	19.6#/f	6x6x½	0-9	3'	58
Bracing Cs	2	St.	25#/f	9" Ship	2'-7½	5'-3	131
Bracing Ls	4	St.	12.8#/f	4x4x½	0-9	3'	38
Butt Straps	2	St	20.4#/f	½x6	11'-8	23'-4	234
Asphalt							294
Total Weight			+100 for Rivet Hds			E35	11764

WAR DEPARTMENT

U. S. ENGINEER OFFICE, PROVIDENCE, R. I.

Subject: Holyoke Dike

Computation: Outlets #7-8A-11 Gates Center of Gravity = 8.66"

Computed by: F.P. McDonough Checked by: E.H. Gue Date: 2-28-39

U. S. GOVERNMENT PRINTING OFFICE 3—10528

Datum Plane is the outside face of Seal Strip

Part Name	Weight #	Dist Y IN.	Moment '' #
Beams	3622	6.50	23542
Channels	1350	6.38	8613
Bracing PLs	345	6.38	2201
Frame Ls	575	6.38	3668
Skin PL	3340	12.88	43019
Side PLs	490	6.38	3126
Bracing Ls	173	1.56	270
Bracing Ls	173	11.44	1979
Rubbing Shoes	295	13.75	4053
Bottom Shoes	40	6.50	260
Roller Assembly	200	15.00	3000
Hoisting Ls	48	6.50	318
Lifting Ls	58	6.50	377
Bracing Ls	131	6.50	852
Bracing Ls	38	6.50	250
Butt Straps	234	13.38	3124
Seal Strips	278	0.18	53
Asphalt	294	6.50	1911
Rivet Hds.	100	12.00	1200
Totals	11764		101816

$Y = 101,816 \div 11764 = 8.66$

E 36

WAR DEPARTMENT

U. S. ENGINEER OFFICE, PROVIDENCE, R. I.

Page 11

Subject: Holyoke Dike

Computation: Outlet #7 Gate Guide

Computed by: E H Bue Checked by: HJK Date: 4-3-39

U. S. GOVERNMENT PRINTING OFFICE 3—10000

Part Name	No Req'd	Mat'l	Unit Wt.	Size	Length Unit	Length Total	Weight	
Vertical Channel	4	St.	21.4#/f	8"x3½	36'-11"	147.67'	3164	
Horizontal Channel	2	St.	18#/f	6x3½	13'-0"	26'	470	
Sill Channel	1	St.	30.9#/f	12x3½	14'-4"	14.33	445	
Connecting Angle	8	St.	19.6#/f	6x6x½	3½	2.33	46	
Connecting Angle	2	St.	12.8#/f	4x4x½	9"	1.5	19	
Connecting Angle	5	St.	11.1#/f	3½x3½x½	5"	2.08'	23	
Anchor	100	St.	2.55#/f	3/8x2	18"	150'	383	
Side Plate	2	St.	20.4#/f	½x22½	36'-11"	73.67'	2825	
Vert. Backing Plate	2	St.	6.80#/f	½x4	12'-10½"	25.75'	175	
Horiz. Backing Plate	2	St.	5.10#/f	½x3	12'-11⅞	26'	133	
Vert. Seal Strip	2	Bronze	6.27#/f	3/8x4½	12'-10½	25.75'	162	
Horiz Seal Strip	2	Bronze	6.27#/f	3/8x4½	13'-2 7/16	26.41	166	
Vert. Guide Plate	2	St.	5.74#/f	3/8x4½	23'-5"	46.83	270	
Rubbing Plate	2	St.	7.65#/f	½x4½	36'-3½	72.58'	556	
Total Weight				100# for Rivet Hds + Weld			8937	✓

WAR DEPARTMENT

U. S. ENGINEER OFFICE, PROVIDENCE, R. I.

Page 12

Subject Holyoke Dike

Computation Outlet #8A Gate Guide

Computed by E H Brie Checked by [illegible] Date 4-3-39

U. S. GOVERNMENT PRINTING OFFICE 3—10528

Part Name	No. Req'd.	Mat'l	Unit Wt.	Size	Length Unit	Length Total	Weight
Vert. Channel	4	St.	21.4#/f	8x3½	37'-5"	149.67'	3209
Horiz. Channel	2	St.	18#/f	6x3½	13'-0"	26'	470
Sill Channel	1	St.	30.9#/f	12x3½	14'-4"	14.33'	445
Connecting Angle	8	St.	19.6#/f	6x6x½	3½	2.33'	46
Connecting Angle	2	St.	12.8#/f	4x4x½	9	1.5'	19
Connecting Angle	5	St.	11.1#/f	3½x3½x½	5	2.08'	23
Anchor	100	St.	2.55#/f	3/8x2	18	150'	383
Side Plate	2	St.	20.4#/f	½x22½	37'-5"	74.83'	2870
Vert. Backing Plate	2	St.	6.80#/f	½x4	12'-10½"	25.75'	175
Horiz. Backing Plate	2	St.	5.10#/f	½x3	12'-11⅞	26'	133
Vert. Seal Strip	2	Bronze	6.27#/f	3/8x4½	12'-10½	25.75'	162
Horiz. Seal Strip	2	Bronze	6.27#/f	3/8x4½	13'-2 7/16	26.41'	166
Vert. Guide Plate	2	St.	5.74#/f	3/8x4½	23'-11"	47.83'	275
Rubbing Plate	2	St.	7.65#/f	½x4½	36'-9½	73.58'	564
Total Weight				100# for Rivet Hds. + Weld			9040 ✓

WAR DEPARTMENT

U. S. ENGINEER OFFICE, PROVIDENCE, R. I.

Subject Holyoke Dike

Computation Outlet #11 Gate Guide

Computed by E H Bree **Checked by** H JK **Date** 4-4-39

U. S. GOVERNMENT PRINTING OFFICE 2—10528

Part Name	No. Req'd.	Mat'l	Unit Wt.	Size	Length Unit	Length Total	Weight
Vert. Channel	4	St.	21.4#/f	8x3½	35'-6	142'	3040
Horiz. Channel	2	St.	18#/f	6x3½	13'-0"	26'	470
Sill Channel	1	St.	30.9#/f	12x3½	14'-4"	14.33'	445
Connecting Angle	8	St.	19.6#/f	6x6x½	3½"	2.33'	46
Connecting Angle	2	St.	12.8#/f	4x4x½	9"	1.5'	19
Connecting Angle	5	St.	11.1#/f	3½x3½x½	5"	2.08'	23
Anchor	96	St	2.55#/f	3/8x2	18"	144'	368
Side Plate	2	St	20.4#/f	½x22½	35'-6"	71'	2720
Vert. Backing Plate	2	St	6.80#/f	½x4	12'-10½	25.75'	175
Horiz. Backing Plate	2	St.	5.10#/f	½x3	12'-11⅞	26'	133
Vert. Seal Strip	2	Bronze	6.27#/f	3/8x4½	12'-10½	25.75'	162
Horiz. Seal Strip	2	Bronze	6.27#/f	3/8x4½	13'-2 7/16	26.41'	166
Vert. Guide Plate	2	St.	5.74#/f	3/8x4½	22'-0"	44'	253
Rubbing Plate	2	St.	7.65#/f	½x4½	34'-10½	69.75'	535
Total Weight				100# for Rivet Hds + Weld			8655 ✓

WAR DEPARTMENT

U. S. ENGINEER OFFICE, PROVIDENCE, R. I.

Page .....

Subject .....

Computation .....

Computed by ..... **Checked by** ..... **Date** .....

U. S. GOVERNMENT PRINTING OFFICE 3—10538

This Gate is applicable to Outlets No. 8B - No. 10 and No. 12. The design is based on the Max. Head of 37.59 Ft. at Outlet No. 8B.

WAR DEPARTMENT

U. S. ENGINEER OFFICE, PROVIDENCE, R. I.

Page 1

Subject: Holyoke Dike

Computation: Outlet #8B Gate

Computed by: E H Brie Checked by: H J K Date: 4-4-39

U. S. GOVERNMENT PRINTING OFFICE 3—10528

Basis of Gate Design:

Area of Gate, upon which Pressure Head of Water acts, to be considered the ℄-℄ of Seal Strips. Gate members to be considered as Simple Beams with ℄ of Supports at ℄ of Seal Strips. Pressure Head is computed with Water Level at Top of Wall and with Conduit on Seal side of Gate unwatered.

Given:

Elev. of Top of Wall	= 78.42
Elev. of Bottom Sill	= 40.50
Elev. of Bottom of Conduit	= 41.00
Elev. of Top of Conduit	= 52.00
Conduit Opening	= 10'-0" Wide x 11'-0" High
Size of Gate	= 11'-0" Wide x 11'-8" High
No. of Gates required	= 1

WAR DEPARTMENT

U. S. ENGINEER OFFICE, PROVIDENCE, R. I.

Page 2

Subject Holyoke Dike

Computation Outlet #8B Gate

Computed by E H Brie Checked by W J K Date 4-5-39

U. S. GOVERNMENT PRINTING OFFICE 3—10538

Computations:

Mean Pressure Hd on Gate = 31.92
= 31.92 × 62.5 = 2000 #/□'

Load on Gate = 10.58 × 11.33 × 2000 = 240,000 #

Assume 4 Beams and 2 channels to support the Load with each channel supporting ½ the equivalent Beam Load.

Load per Beam = 240,000 ÷ 5 = 48,000 #

Moment = $M = SZ = \frac{WL}{8}$

$Z = \frac{WL}{8S} = \frac{48{,}000 \times 127}{8 \times 16000} = 48.0 \text{ IN}^3$

Use 12" × 8" × 40# Beam $Z = 51.9 \text{ IN}^3$

$W = \frac{8SZ}{L} = \frac{8 \times 16000 \times 51.9}{127} = 52{,}300$ # Allowable Beam Load

WAR DEPARTMENT

U. S. ENGINEER OFFICE, PROVIDENCE, R. I.

Subject Holyoke Dike

Computation Outlet #10 Gate

Computed by E H Zue Checked by H JK Date 4-4-39

U. S. GOVERNMENT PRINTING OFFICE 3—10588

Basis of Gate Design:

Area of Gate, upon which Pressure Head of Water acts, to be considered the ℄-℄ of Seal Strips. Gate members to be considered as Simple Beams with ℄ of Supports at ℄ of Seal Strips. Pressure Head is computed with Water Level at Top of Wall and with Conduit on Seal Side of Gate unwatered.

Given:

Elev. of Top of Wall	=	77.00
Elev. of Bottom Sill	=	40.50
Elev. of Bottom of Conduit	=	41.00
Elev. of Top of Conduit	=	52.00
Conduit Opening	=	10'-0" Wide x 11'-0" High
Size of Gate	=	11'-0" Wide x 11'-8" High
No. of Gates required	=	2

WAR DEPARTMENT

U. S. ENGINEER OFFICE, PROVIDENCE, R. I.

Page 4

Subject Holyoke Dike

Computation Outlet #10 Gate

Computed by EHBrie Checked by HJK Date 4-5-39

U. S. GOVERNMENT PRINTING OFFICE 9—10528

Computations:

Mean Pressure Hd. on Gate = 30.50'
= 30.50 × 62.5 = 1900 #/□'

Load on Gate = 10.58 × 11.33 × 1900 = 228,000 #

Assume 4 Beams and 2 channels to support the Load with each channel supporting ½ the equivalent Beam Load.

Load per Beam = 228,000 ÷ 5 = 45,600 #

Moment = $M = SZ = \frac{WL}{8}$

$Z = \frac{WL}{8S} = \frac{45,600 \times 127}{8 \times 16000} = 45.3 \text{ IN}^3$

Use 12" × 8" × 40 # Beam $Z = 51.9 \text{ IN}^3$

$W = \frac{8SZ}{L} = \frac{8 \times 16000 \times 51.9}{127} = 52,300$ # Allowable Beam Load

WAR DEPARTMENT

U. S. ENGINEER OFFICE, PROVIDENCE, R. I.

Subject: Holyoke Dike

Computation: Outlet #12 Gate

Computed by: E.H. Brown Checked by: H.J.K. Date: 4-4-39

U. S. GOVERNMENT PRINTING OFFICE 3—10528

Basis of Gate Design

Area of Gate, upon which Pressure Head of Water acts, to be considered the ℄-℄ of Seal Strips. Gate members to be considered as Simple Beams with ℄ of Supports at ℄ of Seal Strips. Pressure Head is computed with Water Level at Top of Wall and with Conduit on Seal Side of Gate Unwatered.

Given:

Elev. of Top of Wall	= 76.25
Elev. of Bottom Sill	= 38.50
Elev. of Bottom of Conduit	= 39.00
Elev. of Top of Conduit	= 50.00
Conduit Opening	= 10'-0" Wide x 11'-0" High
Size of Gate	= 11'-0" Wide x 11'-8 High
No. of Gates required	= 2

WAR DEPARTMENT

U. S. ENGINEER OFFICE, PROVIDENCE, R. I.

Subject: Holyoke Dike

Computation: Outlet #12 Gate

Computed by: E.H. Brie Checked by: H.J.K. Date: 4-5-39

U. S. GOVERNMENT PRINTING OFFICE 3—10638

Computations:

Mean Pressure Hd. on Gate $= 31.75'$
$= 31.75 \times 62.5 = 1990\ \#/\square'$

Load on Gate $= 10.58 \times 11.33 \times 1990 = 239{,}200$

Assume 4 Beams and 2 Channels to support the Load with each Channel supporting ½ the equivalent Beam Load

Load per Beam $= 239{,}200 \div 5 = 50{,}640\ \#$

Moment $= M = SZ = \frac{WL}{8}$

$$Z = \frac{WL}{8S} = \frac{47{,}840 \times 127}{8 \times 16000} = 47.5\ IN^3$$

Use 12" × 8" × 40# Beam $Z = 51.9\ IN^3$

$$W = \frac{8SZ}{L} = \frac{8 \times 16000 \times 51.9}{127} = 52{,}300\ \#$$ Allowable Beam Load

WAR DEPARTMENT

U. S. ENGINEER OFFICE, PROVIDENCE, R. I.

Subject Holyoke Dike

Computation Outlets #8B-10-12 Gates

Computed by E.H. Blue. Checked by [illegible] Date 4-5-39

U. S. GOVERNMENT PRINTING OFFICE 3—10528

Spacing of Beams to be arranged to carry a proportionate share of the Load.

W = Hd. × Length Press. Area × Width Press. Area × 62.5
= 52,306 #

Width Pressure Area = Spacing (Y) = $\frac{52300}{Hd \times 10.58 \times 62.5} = \frac{79.2}{Hd.}$

1 - $Y = \frac{79.2}{37.59} = 2.10'$

2 - $Y = \frac{79.2}{35.49} = 2.23$

3 $Y = \frac{79.2}{33.26} = 2.38$

4 $Y = \frac{79.2}{30.88} = 2.56$

5 $Y = \frac{79.2}{28.32} = 2.80$

$\Sigma Y = 12.07$

Gate Height = 11'-8" = 11.67'

Correction Factor = 11.67 ÷ 12.07 = .97

1 - Y' =	2.10 × .97	= 2.06	= 2'-0½"
2 - Y' =	2.23	= 2.16	= 2'-2"
3 - Y' =	2.38	= 2.30	= 2'-3¾"
4 - Y'	2.56	= 2.47	= 2'-5¾"
5 - Y'	2.80	= 2.68	= 2'-8"

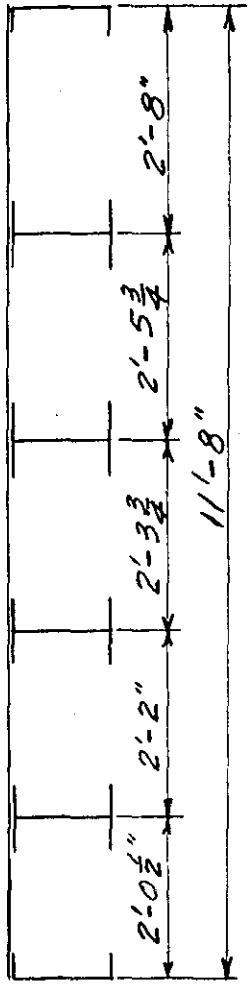

Note: Since the above spacing is made on basis of max. Hd. and the Hds on the Gates in the three Outlets are nearly the same the above spacing will be used for the Gates at the three Outlets

WAR DEPARTMENT

U. S. ENGINEER OFFICE, PROVIDENCE, R. I.

Page 8

Subject: Holyoke Dike

Computation: Outlets #8B-10-12, Gates

Computed by: EHBue Checked by: HJR Date: 4-5-39

U. S. GOVERNMENT PRINTING OFFICE 3—10528

Load on Bottom Channel

$W = 1.03 \times 10.58 \times 37.59 \times 62.5 = 25000\#$

$Z = \frac{WL}{8S} = \frac{25,000 \times 127}{8 \times 16000} = 24.7 \text{ in}^3$

Use 12" x 4" x 35# Ship Channel $Z = 35.8 \text{ in}^3$

Load on Skin Plate Upper Panel

$W = 2.23 \times 10.5 \times 62.5 \times 28.77 = 42200\#$

$= \frac{2.67\, S t^2 (L^2 + \ell^2)}{L \ell}$ (Fixed Plate Formula)

$L = 126 \quad \ell = 26\frac{3}{4}''$

$t^2 = \frac{WL\ell}{2.67\, S(L^2+\ell^2)} = \frac{42200 \times 126 \times 26.75}{2.67 \times 16000 \underbrace{(126^2 + 26.75^2)}_{16,615}} = .20$

$t = .45$

Use $\frac{1}{2}$" skin Plate

WAR DEPARTMENT

U. S. ENGINEER OFFICE, PROVIDENCE, R. I.

Subject: Holyoke Dike

Computation: Outlets #8B-10-12 Gates

Computed by: F.P. McDonough Checked by: E.H. Bue Date: 2-28-39

U. S. GOVERNMENT PRINTING OFFICE 3—10238

Part Name	No. Req'd	Mat'l	Unit Wt.	Size	Length Unit	Length Total	Weight
Beams	4	St	40 #/f	12×8	10'-11	43'-8	1740
Channels	2	St.	35 #/f	12×4	10'-11	21'-10	764
Bracing Pls	2	St	20.4 #/□	½×9	11'-4	22'-8	351
Frame Ls	60	St	12.8 #/f	4×4×½	0-9	45'	575
Skin Pl	1	St.	20.4 #/□	½×11'-0"	11'-8	11'-8	2619
Side Pls	2	St.	20.4 #/□	½×12 3/16	11'-8	23'-4	484
Bracing Ls	4	St.	12.8 #/f	4×4×½	8'-2	32'-8	418
Seal Strips Top + Bottom	2	Bronze	5.58 #/f	3/8×4	11'-0	22'	123
Seal Strips Sides	2	Bronze	5.58 #/f	3/8×4	11'-8	23'-4	130
Rubbing Shoes	6	W.I.	16.8 #/f	1¼×4	3'-0	18'	295
Bottom Shoes	3	St	13.4 #/f	2×2	1'-0	3'	40
Roller Assembly	4	St	50 #				200
Hoisting Ls	4	St	16.2 #/f	6×4×½	0-9	3'	48
Lifting Ls	4	St	19.6 #/f	6×6×½	0-9	3	58
Bracing Ls	2	St	25 #/f	9" Ship	2'-6¾	5'-1½	128
Bracing Ls	4	St	12.8 #/f	4×4×½	0-9	3'	38
Butt Straps	2	St.	20.4 #/□	½×6	11'-8	23'-4	238
Asphalt							220
Total Weight			+100 # for Rivet Hds		E49		8569

WAR DEPARTMENT

U. S. ENGINEER OFFICE, PROVIDENCE, R. I.

Page 10

Subject Holyoke Dike

Computation Outlets #8B-10-12 Gates Center of Gravity = 8.86"

Computed by F.P.McDonough Checked by E.H.Brie Date 2-28-39

U. S. GOVERNMENT PRINTING OFFICE 3—10538

Datum Plane is the outside face of Seal Strip

Part Name	Weight	Dist Y.	Moment
Beams	1740	6.41	11153
Channels	764	6.38	4874
Bracing PLs	351	6.38	2239
Frame Ls	575	6.38	3675
Skin PL	2619	12.69	33235
Side PLs	484	6.38	3088
Bracing Ls	209	11.26	2354
Bracing Ls	209	1.56	326
Rubbing Shoes	295	13.56	4095
Bottom Shoes	40	6.38	255
Roller Assembly	200	15.00	3000
Hoisting Ls	48	6.38	310
Lifting Ls	58	6.38	370
Bracing Ls	128	6.41	821
Bracing Ls	38	6.41	246
Butt Straps	238	13.19	3139
Seal Strips	253	0.18	46
Asphalt.	220	6.38	1404
Rivet Hds.	100	12.00	1200
Totals	8569		75830

$Y = 75830 \div 8569 = 8.86"$

E 50

WAR DEPARTMENT

U. S. ENGINEER OFFICE, PROVIDENCE, R. I.

Subject: Holyoke Dike

Computation: Outlet #8B Gate Guide

Computed by: E H Bue Checked by: HJK Date: 4-4-39

U. S. GOVERNMENT PRINTING OFFICE 3—10538

Part Name	No. Req'd	Mat'l	Unit Wt.	Size	Length Unit	Length Total	Weight
Vert. Channel	4	St.	21.4 #/f	8×3½	37'-5"	149.67'	3209
Horiz. Channel	2	St.	18 #/f	6×3½	10'-0"	20'	360
Sill Channel	1	St.	30.9 #/f	12×3½	11'-4"	11.33'	351
Connecting Angle	8	St.	19.6 #/f	6×6×½	3½"	2.33'	46
Connecting Angle	2	St.	12.8 #/f	4×4×½	9"	1.5'	19
Connecting Angle	4	St.	11.1 #/f	3½×3½×½	5"	1.66'	19
Anchor	96	St.	2.55 #/f	⅜×2	18"	144'	368
Side Plate	2	St.	20.4 #/f	½×22⅜	37'-5"	74.83'	2850
Vert. Backing Plate	2	St.	6.80 #/f	½×4	12'-10½	25.75'	175
Horiz. Backing Plate	2	St.	5.10 #/f	½×3	9'-11⅞	20'	102
Vert. Seal Strip	2	Bronze	6.27 #/f	⅜×4½	12'-10½	25.75'	162
Horiz. Seal Strip	2	Bronze	6.27 #/f	⅜×4½	10'-2 7/16	20.41'	129
Vert. Guide Plate	2	St.	5.74 #/f	⅜×4½	23'-11"	47.83'	275
Rubbing Plate	2	St.	7.65 #/f	½×4½	36'-9½	7	564
Total Weight				100# for Rivet Hds + Weld			8729 ✓

WAR DEPARTMENT

U. S. ENGINEER OFFICE, PROVIDENCE, R. I.

Page 12

Subject Holyoke Dike

Computation Outlet #10 Gate Guide

Computed by E H Brie Checked by HJK Date 4-4-39

U. S. GOVERNMENT PRINTING OFFICE 3—10528

Part Name	No. Req'd.	Mat'l	Unit Wt.	Size	Length Unit	Length Total	Weight	
Vert. Channel	4	St.	21.4#/f	8x3½	36'-0"	144'	3082	
Horiz. Channel	2	St.	18#/f	6x3½	10'-0"	20'	360	
Sill Channel	1	St.	30.9#/f	12x3½	11'-4"	11.33'	351	
Connecting Angle	8	St.	19.6#/f	6x6x½	3½"	2.33'	46	
Connecting Angle	2	St.	12.8#/f	4x4x½	9"	1.5'	19	
Connecting Angle	4	St.	11.1#/f	3½x3½x½	5"	1.66'	19	
Anchor	92	St.	2.55#/f	3/8x2	18"	138'	352	
Side Plate	2	St.	20.4#/f	½x22 3/8	36'-0"	72.0	2740	
Vert. Backing Plate	2	St.	6.80#/f	½x4	12'-10½	25.75	175	
Horiz. Backing Plate	2	St.	5.10#/f	½x3	9'-11 7/8	20'	102	
Vert. Seal Strip	2	Bronze	6.27#/f	3/8x4½	12'-10½	25.75'	162	
Horiz. Seal Strips	2	Bronze	6.27#/f	3/8x4½	10'-2 7/16	20.41'	129	
Vert. Guide Plate	2	St.	5.74#/f	3/8x4½	22'-6"	45.0'	259	
Rubbing Plate	2	St.	7.65#/f	½x4½	35'-4½	70.75	544	
Total Weight				+100# for Rivet Hds + weld			8440	✓

E 52

WAR DEPARTMENT

U. S. ENGINEER OFFICE, PROVIDENCE, R. I.

Subject: Holyoke Dike

Computation: Outlet #12 Gate Guide

Computed by: E H Bue Checked by: HJK Date: 4-4-39

U. S. GOVERNMENT PRINTING OFFICE 9—10538

Part Name	No. Req'd	Mat'l	Unit Wt.	Size	Length Unit	Length Total	Weight	
Vert. Channel	4	St.	21.4 #/f	8 x 3½	37'-3"	149'	3200	
Horiz Channel	2	St.	18 #/f	6 x 3½	10'-0"	20'	360	
Sill Channel	1	St.	30.9 #/f	12 x 3½	11'-4"	11.33'	351	
Connecting Angle	8	St.	19.6 #/f	6 x 6 x ½	3½"	2.33'	46	
Connecting Angle	2	St.	12.8 #/f	4 x 4 x ½	9"	1.5'	19	
Connecting Angle	4	St.	11.1 #/f	3½ x 3½ x ½	5"	1.66'	19	
Anchor	96	St.	2.55 #/f	3/8 x 2	18"	144'	368	
Side Plate	2	St.	20.4 #/f	½ x 22 3/8	37'-3"	74.5'	2840	
Vert. Backing Plate	2	St.	6.80 #/f	½ x 4	12'-10½	25.75'	175	
Horiz Backing Plate	2	St.	5.10 #/f	½ x 3	9'-11 7/8	20'	102	
Vert. Seal Strip	2	Bronze	6.27 #/f	3/8 x 4½	12'-10½	25.75'	162	
Horiz Seal Strip	2	Bronze	6.27 #/f	3/8 x 4½	10'-2 7/16	20.41'	129	
Vert. Guide Plate	2	St.	5.74 #/f	3/8 x 4½	23'-9"	47.5'	274	
Rubbing Plate	2	St.	7.65 #/f	½ x 4½	36'-7½	73.5'	565	
Total Weight				100 # for Rivet Hds + Weld			8710	✓

WAR DEPARTMENT

U. S. ENGINEER OFFICE, PROVIDENCE, R. I.

Page .....

Subject Holyoke Gates

Computation Gate Hoist Capacity

Computed by [illegible] Checked by S.R.L. Date 3/6/39

U. S. GOVERNMENT PRINTING OFFICE 3—10528

The minimum capacity of the hoists were set at one and a half times the weight of the gate. This is considered ample as the gates are to be operated under balanced head conditions.

To standardize the hoists it was decided to employ the same hoist for all gates, this will result in several of the lighter gates having over powered hoists. To provide hoists of the correct capacity would not result in any saving as the hoist would have to be specially made. In addition the manufacture of a number of hoists of the same size and capacity will result in a lower cost. The time element involved in closing or opening the gates will not material increase by using overpowered hoists.

After studying the standard hoists manufactured by Chapman, Crane, and Koppers it was decided to use a hoist comparable to the Chapman Model M 10. With a 2¾ stem this hoist has a capacity of 11,250# with a 40# Pull on the crank. This is sufficient for the largest size gate.

Two hoists will be employed for each gate. they will be crossed connected on their high speed shaft. One gate stem will have right hand threads and the other left hand.

WAR DEPARTMENT

U. S. ENGINEER OFFICE, PROVIDENCE, R. I.

Page .....

Subject: Holyoke Gates

Computation: General Dimensions and Elevations

Computed by: [illegible] Checked by: [illegible] Date: 5/16/39

Outlet No.	No of Gates	Outlet Width	Outlet Height	Gate Width	Height of Gate from bottom of Shoe to Center of Stem Cushing Casting	Height of Gate from bottom of Shoe to web of Top Channel	El. Top of Concrete	El. Gate Sill	El. Stem Guide	CtoC of Hoists	Center of Hoist to face of seat in Guide	Rise of Gate	Est. Gate Weight
1.	2.	10'.	11'.	11'.	12'-1".	11'-10".	80.0.	51.5.	—	7'-4"	8 3/4"	12'-1".	8200.
4.	2.	14'.	12'.	15'.	13'-1".	12'-10".	80.0	51.5.	—	9'-0"	8 15/16.	13'-1".	12000.
6.	1.	14'.	12'.	15'.	13'-1".	12'-10".	79.83	41.5.	69.0.	9'-0".	8 3/4"	13'-1"	13500
7.	3.	13'.	11'.	14'.	12'-1"	11'-10".	78.92	41.5.	67.0.	9'-0".	8 11/16	12'-1".	11800
8a.	1.	13'.	11'.	14'.	12'-1".	11'-10".	78.42	40.5.	66.0.	9'-0".	8 11/16	12'-1".	11800
8b.	1.	10'.	11'.	11'.	12'-1".	11'-10".	78.42	40.5.	66.0.	7'-4".	8 7/8.	12'-1".	8600
9.	1.	14'.	12'.	15'.	13'-1".	12'-10".	77.33	40.5.	68.0.	9'-0".	8 3/4.	13'-1"	13500
10.	2.	10'.	11'.	11'.	12'-1".	11'-10".	77.00	40.5.	66.0.	7'-4".	8 7/8.	12'-1".	8600
11.	1.	13'.	11'.	14'.	12'-1".	11'-10".	76.5.	40.5.	66.0.	9'-0".	8 11/16.	12'-1".	11800
12.	2.	10'.	11'.	11'.	12'-1".	11'-10".	76.25.	38.5.	64.0.	7'-4".	8 7/8.	12'-1".	8600

U. S. GOVERNMENT PRINTING OFFICE 9—13688

WAR DEPARTMENT

U. S. ENGINEER OFFICE, PROVIDENCE, R. I.

Page .....

Subject Holyoke Gates

Computation Gate Widths

Computed by E H Bree Checked by [illegible] Date 3/16/39

U. S. GOVERNMENT PRINTING OFFICE 3—10528

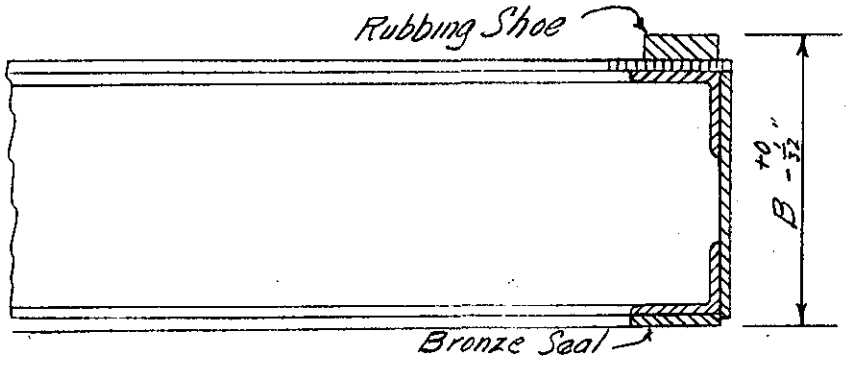

Outlet No	Size of Beams	Size of Channels	Maximum Width of Beam	Gate Overall Width
1-2	12" x 8 x 40#	12" x 4" x 35#	12 1/8" *	14 3/16"
4	12" x 10" x 53#	12" x 4" x 40#	12 3/16"	14 5/16
6-9	12" x 12" x 72#	12" x 4" x 50#	12 3/8"	14 1/2"
7-8a-11	12" x 12" x 65#	12" x 4" x 48.6#	12 1/4"	14 3/8"
8b-10-12	12" x 8" x 40#	12" x 4" x 35#	12 1/8" *	14 1/4"

* Max Width of channel governs.

E 56

WAR DEPARTMENT

U. S. ENGINEER OFFICE, PROVIDENCE, R. I.

Page .....

Subject *Holyoke Gates*

Computation *Guide and Seal Dimensions*

Computed by *H J Kupper* Checked by *E H Brie* Date *3/16/39*

U. S. GOVERNMENT PRINTING OFFICE 3—10539

Bronze Red Structural Steel Blue

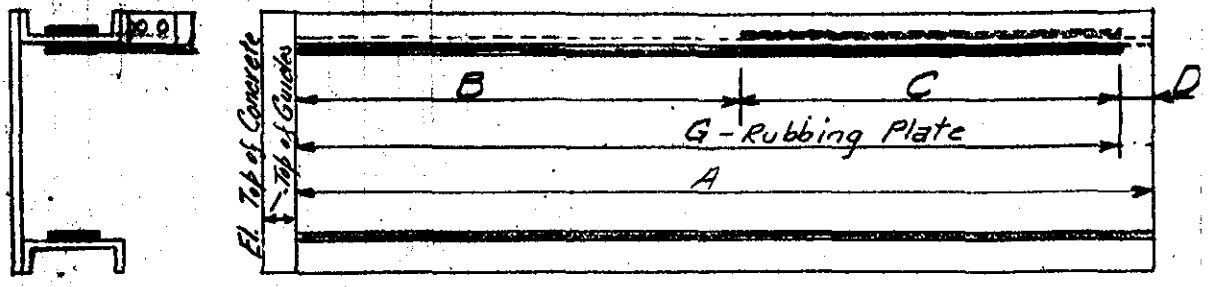

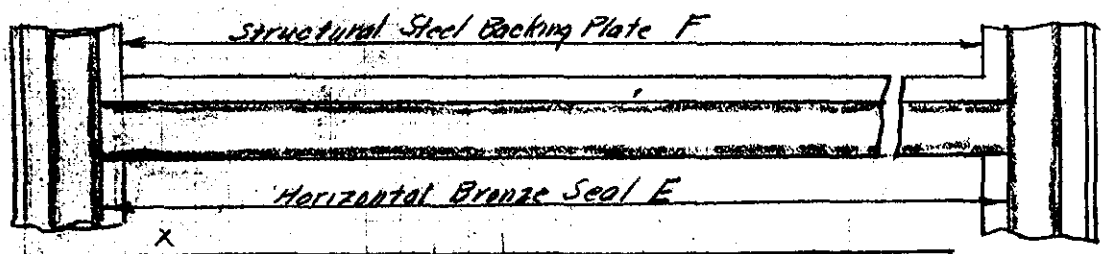

Outlet No	A	B	C	D	E	F	G	Total Weight of Guide
1.	28'-0"	14'-6"	12'-10½"	7½"	10'-2 9/16"	9'-11 7/8"	27'-4½	6900
4.	28'-0"	13'-6"	13'-10½"	7½"	14'-2 7/16"	13'-11 7/8"	27'-4½	7300
6.	37'-10"	23'-4"	13-10½"	7½"	14'-2 7/16"	13'-11 7/8"	37-2½	9300
7.	36'-11"	23'-5"	12'-10½"	7½"	13'-2 7/16"	12'-11 7/8"	36-3½	9000
8a.	37'-5"	23'-11"	12'-10½"	7½"	13'-2 7/16"	12'-11 7/8"	36'-9½	9100
8b.	37'-5"	23'-11"	12'-10½"	7½"	10'-2 7/16"	9'-11 7/8"	36'-9½	8800
9.	36'-4"	21'-10"	13'-10½"	7½"	14'-2 7/16"	13'-11 7/8"	35'-8½"	9000
10.	36'-0"	22'-6"	12'-10½"	7½"	10'-2 7/16"	9'-11 7/8"	35'-4½"	8500
11.	35'-6"	22'-0"	12'-10½"	7½"	13'-2 7/16"	12'-11 7/8"	34'-10½	8700
12.	37'-3"	23'-9"	12'-10½"	7½"	10'-2 7/16"	9'-11 7/8"	36-7½	8800

E 57

WAR DEPARTMENT

U. S. ENGINEER OFFICE, PROVIDENCE, R. I.

Page

Subject Holyoke Dike.

Computation Hoist Details

Computed by E H Bree Checked by NJK Date 3-27-39

U. S. GOVERNMENT PRINTING OFFICE 3—10528

Assume the Max upward pull of Hoist stem on Gate to Stem connector parts to be One and one-half ($1\frac{1}{2}$) times rated Hoist Capacity of 11500# or to equal to 17000#

This upward pull of 17000 will be resisted by following parts.

A- Root of thread on Stem in shear

B- Coupling in tension at thread

C- Bearing Pressure on Pin and Coupling

D- Coupling in tension at Pin

E- Double shear on Pin

F- Rivets and bolts in tension - Connecting Angles to Gate.

A- Shearing Stress on threaded end of Stem

Shear Area = Circumference thread root x thread Length

$= 2.42 \times \pi \times 3.75 = 24.7 \square''$

Shear Stress $= 17000 \div 24.7 = 690 \#/\square''$

OK.

B- Tensile stress in Coupling

Tensile Area = Area $4\frac{1}{2}$ dia - Area 3" dia.

$= 15.90 - 7.07 = 8.83 \#/\square''$

Tensile Stress $= 17000 \div 8.83 = 1930 \#/\square''$

OK.

WAR DEPARTMENT

U. S. ENGINEER OFFICE, PROVIDENCE, R. I.

Page .....

Subject: Holyoke Dike

Computation: Hoist Details

Computed by: EHBrit. Checked by: HJK Date: 3-27-39

U. S. GOVERNMENT PRINTING OFFICE 3—10528

Allowable Load on Stem as a long Column

$$W = \frac{\pi^2 E I}{L^2}$$ (Euler's long column Formula)

Dia. Stem at thread root = 2.23 IN.
Unsupported length Stem = 151 IN.
E = 29,000,000 #/□"
$I = .049\, d^4 = .049 \times (2.23)^4 = 1.22$

$$W = \frac{\pi^2 \times 29{,}000 \times 1.22}{(151)^2} = 15400\ \#$$

Note: This value of W is the Max. downward thrust of the Hoist to the Gate thru the Stem. This thrust will permit the exertion of a greater force on the Hoist Crank Handles than the 40# for the Rated Hoist Capacity of 11500 #.

Allowable Tensile Load on the Stem

$W = SA$

S = Tensile stress of Cold Rolled Steel = 12,000 #/□"
A = Area Stem at thread root = 3.91 □"

$W = 12{,}000 \times 3.91 = 47{,}000\ \#$

Note: This allowable tensile load of each Hoist Stem is far in excess of the demand for Hoisting the Heaviest Gate

WAR DEPARTMENT

U. S. ENGINEER OFFICE, PROVIDENCE, R. I.

Page

Subject: Holyoke Dike

Computation: Hoist Details

Computed by: EHBric Checked by: NJK Date: 3-27-39

U. S. GOVERNMENT PRINTING OFFICE 3—10521

C - Bearing Pressure on Pin and Coupling

Bearing Area = Width Coupling × Dia of Pin
= 3 × 1.5 = 4.5 □"

Bearing Pressure = 17000 ÷ 4.5 = 3770 #/□"

O.K.

D - Coupling in tension at Pin

Tension Area = (Width coupling - dia. Pin) × thickness Coupling

= (4.5 - 1.5) × 3 = 3 × 3 = 9 □"

Tensile Stress = 17000 ÷ 9 = 1900 #/□"

OK

E - Coupling Pin in double shear

Shear Area = 2 × Area 1½ dia. pin
= 2 × 1.77 = 3.54 □"

Shearing Stress = 17000 ÷ 3.54 = 3680 #/□"

F - Tensile stress in Rivets and bolts

Tensile Area = Area of 12-⅞ Rivets and 12-⅞-9 Bolts

= 12 × .6 + 12 × .42
= 7.2 + 5.05 = 12.25

Tensile Stress = 17000 ÷ 12.25 = 1390 #/□"

WAR DEPARTMENT

U. S. ENGINEER OFFICE, PROVIDENCE, R. I.

Page 1

Subject: Holyoke Dike

Computation: Supporting Members for Hoists

Computed by: E.H. Bue Checked by: H.J.K. Date: 3/27/39

U. S. GOVERNMENT PRINTING OFFICE 9—10628

Supporting Channels

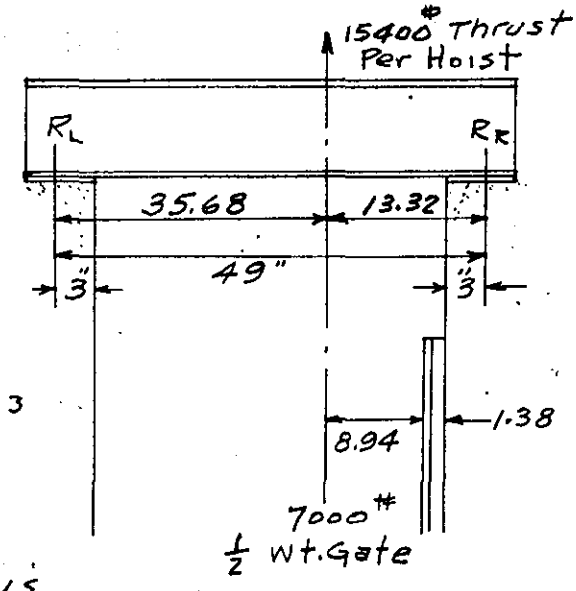

$R_L = \frac{13.32}{49} \times 15400 = 4180^{\#}$

$R_R = \frac{35.68}{49} \times 15400 = 11220^{\#}$

$M = 11220 \times 13.32 = 150{,}000''\#$

$= SZ$

$Z = \frac{M}{S} = \frac{150{,}000}{16000} = 9.4 \text{ IN}^3$

This Section Modulus Z is provided by Two (2) 6" x 3½ x 15.3# Ship Channel with a Z of 8.4 or a total Z of 16.8 IN³.

OK

Supporting Plate

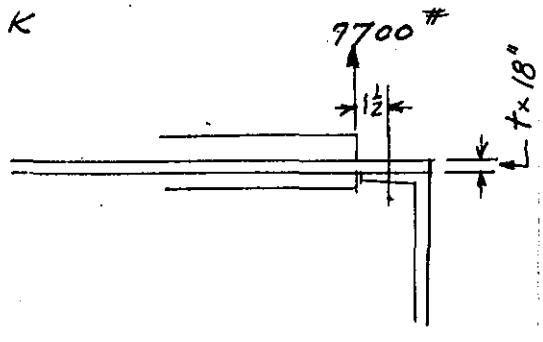

$P = \frac{15400}{2} = 7700^{\#}$

$M = 7700 \times 1.5 = 11550''\#$

$= SZ$

$Z = \frac{M}{S} = \frac{11550}{16000} = .72 \text{ IN}^3$

$= \frac{bh^2}{6}$

$\frac{bh^2}{6} = .72$

$h^2 = \frac{.72 \times 6}{18} = .22$

$h = .47''$

Use ½ Plate $Z = .75$

$S = \frac{11550}{.75} = 15400^{\#}/\square''$ O.K.

E61