US Army Corps of Engineers

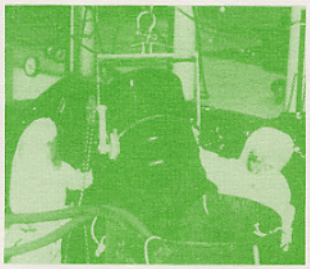

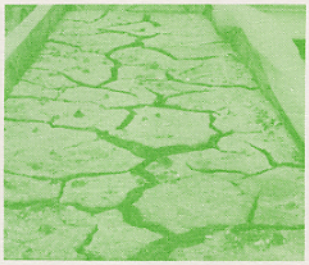

TECHNICAL REPORT EL-88-15

NEW BEDFORD HARBOR SUPERFUND PROJECT, ACUSHNET RIVER ESTUARY ENGINEERING FEASIBILITY STUDY OF DREDGING AND DREDGED MATERIAL DISPOSAL ALTERNATIVES

Report 10

EVALUATION OF DREDGING AND DREDGING CONTROL TECHNOLOGIES

by

Michael R. Palermo

Environmental Laboratory

DEPARTMENT OF THE ARMY
Waterways Experiment Station, Corps of Engineers
PO Box 631, Vicksburg, Mississippi 39181-0631

and

Virginia R. Pankow

Hydraulics Laboratory

DEPARTMENT OF THE ARMY
Waterways Experiment Station, Corps of Engineers
PO Box 631, Vicksburg, Mississippi 39181-0631

November 1988

Report 10 of a Series

Approved For Public Release; Distribution Unlimited

Prepared for US Environmental Protection Agency
Region 1, Boston, Massachusetts 02203-2211

NEW BEDFORD HARBOR SUPERFUND PROJECT, ACUSHNET RIVER ESTUARY ENGINEERING FEASIBILITY STUDY OF DREDGING AND DREDGED MATERIAL DISPOSAL ALTERNATIVES

No. in Series	Report Title
1	Study Overview
2	Sediment and Contaminant Hydraulic Transport Investigations
3	Characterization and Elutriate Testing of Acushnet River Estuary Sediment
4	Surface Runoff Quality Evaluation for Confined Disposal
5	Evaluation of Leachate Quality
6	Laboratory Testing for Subaqueous Capping
7	Settling and Chemical Clarification Tests
8	Compatibility of Liner Systems with New Bedford Harbor Dredged Material Contaminants
9	Laboratory-Scale Application of Solidification/Stabilization Technology
10	Evaluation of Dredging and Dredging Control Technologies
11	Evaluation of Conceptual Dredging and Disposal Alternatives
12	Executive Summary

Destroy this report when no longer needed. Do not return it to the originator.

The findings in this report are not to be construed as an official Department of the Army position unless so designated by other authorized documents.

The contents of this report are not to be used for advertising, publication, or promotional purposes. Citation of trade names does not constitute an official endorsement or approval of the use of such commercial products.

Unclassified
SECURITY CLASSIFICATION OF THIS PAGE

REPORT DOCUMENTATION PAGE

Form Approved
OMB No. 0704-0188

1a. REPORT SECURITY CLASSIFICATION
Unclassified

1b. RESTRICTIVE MARKINGS

2a. SECURITY CLASSIFICATION AUTHORITY

2b. DECLASSIFICATION/DOWNGRADING SCHEDULE

3. DISTRIBUTION/AVAILABILITY OF REPORT
Approved for public release; distribution unlimited.

4. PERFORMING ORGANIZATION REPORT NUMBER(S)
Technical Report EL-88-15

5. MONITORING ORGANIZATION REPORT NUMBER(S)

6a. NAME OF PERFORMING ORGANIZATION
USAEWES, Environmental and Hydraulics Laboratories

6b. OFFICE SYMBOL (If applicable)

7a. NAME OF MONITORING ORGANIZATION

6c. ADDRESS (City, State, and ZIP Code)
PO Box 631
Vicksburg, MS 39181-0631

7b. ADDRESS (City, State, and ZIP Code)

8a. NAME OF FUNDING/SPONSORING ORGANIZATION
US Environmental Protection Agency, Region 1

8b. OFFICE SYMBOL (If applicable)

9. PROCUREMENT INSTRUMENT IDENTIFICATION NUMBER

8c. ADDRESS (City, State, and ZIP Code)
J. F. Kennedy Federal Building
Boston, MA 02203-2211

10. SOURCE OF FUNDING NUMBERS

PROGRAM ELEMENT NO.	PROJECT NO.	TASK NO.	WORK UNIT ACCESSION NO.

11. TITLE (Include Security Classification) New Bedford Harbor Superfund Project, Acushnet River Estuary Engineering Feasibility Study of Dredging and Dredged Material Disposal Alternatives; Report 10, Evaluation of Dredging and Dredging Control Technologies

12. PERSONAL AUTHOR(S)
Palermo, Michael R.; Pankow, Virginia R.

13a. TYPE OF REPORT
Report 10 of a series

13b. TIME COVERED
FROM Aug 85 TO Mar 88

14. DATE OF REPORT (Year, Month, Day)
November 1988

15. PAGE COUNT
54

16. SUPPLEMENTARY NOTATION
Available from National Technical Information Service, 5285 Port Royal Road, Springfield, VA 22161.

17. COSATI CODES

FIELD	GROUP	SUB-GROUP

18. SUBJECT TERMS (Continue on reverse if necessary and identify by block number)
Contaminated sediment
Sediment resuspension
Dredges
Superfund
New Bedford

19. ABSTRACT (Continue on reverse if necessary and identify by block number)

This report presents the results of an evaluation of dredging equipment and techniques for removal of highly contaminated sediments from the upper estuary of the Acushnet River, a portion of the New Bedford Harbor Superfund Project. Site conditions as related to dredge selection and operation, factors considered in selection of equipment, various dredge types considered for use, and operational procedures and controls for sediment resuspension during dredging are described. Each of the dredge types is ranked according to the following criteria: campatibility for full-scale cleanup, availability, safety, potential for sediment resuspension, maneuverability, cleanup precision, cost and production, flexibility, required water depth for operation, ability to access the site, and compatibility with disposal options.

20. DISTRIBUTION/AVAILABILITY OF ABSTRACT
☒ UNCLASSIFIED/UNLIMITED ☐ SAME AS RPT. ☐ DTIC USERS

21. ABSTRACT SECURITY CLASSIFICATION
Unclassified

22a. NAME OF RESPONSIBLE INDIVIDUAL

22b. TELEPHONE (Include Area Code)

22c. OFFICE SYMBOL

DD Form 1473, JUN 86 Previous editions are obsolete.

SECURITY CLASSIFICATION OF THIS PAGE
Unclassified

PREFACE

This study was conducted as a part of the Acushnet River Estuary Engineering Feasibility Study (EFS) of Dredging and Dredged Material Disposal Alternatives. The US Army Corps of Engineers (USACE) performed the EFS for the US Environmental Protection Agency (USEPA), Region 1, as a component of the comprehensive USEPA Feasibility Study for the New Bedford Harbor Superfund Site, New Bedford, MA. This report, Report 10 of a series, was prepared by the US Army Engineer Waterways Experiment Station (WES) in cooperation with the New England Division (NED), USACE. Coordination and management support was provided by the Omaha District, USACE, and dredging program coordination was provided by the Dredging Division, USACE. The study was conducted between August 1985 and March 1988.

Project manager for the USEPA was Mr. Frank Ciavattieri. The NED project managers were Messrs. Mark J. Otis and Alan Randall. Omaha District project managers were Messrs. Kevin Mayberry and William Bonneau. Project managers for the WES were Messrs. Norman R. Francingues, Jr., and Daniel E. Averett.

The report was prepared by Dr. Michael R. Palermo, Environmental Engineering Division (EED), Environmental Laboratory (EL), WES, and Ms. Virginia R. Pankow, Estuaries Division (ED), Hydraulics Laboratory (HL), WES. Technical review of the report was provided by the following WES personnel: Mr. Averett and Dr. Robert Havis, EED, EL; Mr. Allen M. Teeter, ED, HL; and Mr. Lim Vallianos, Coastal Engineering Research Center. The report was edited by Ms. Jessica S. Ruff of the WES Information Technology Laboratory.

This study was conducted under the general supervision of Dr. Raymond L. Montgomery, Chief, EED, EL; Mr. William H. McAnally, Jr., Chief, ED, HL; Dr. John Harrison, Chief, EL; and Mr. Frank Herrmann, Chief, HL.

COL Dwayne G. Lee, EN, was the Commander and Director of WES. Dr. Robert W. Whalin was Technical Director.

This report should be cited as follows:

Palermo, Michael R., and Pankow, Virginia R. 1988. "New Bedford Harbor Superfund Project, Acushnet River Estuary Engineering Feasibility Study of Dredging and Dredged Material Disposal Alternatives; Report 10, Evaluation of Dredging and Dredging Control Technologies," Technical Report EL-88-15, US Army Engineer Waterways Experiment Station, Vicksburg, MS.

CONTENTS

	Page
PREFACE	1
CONVERSION FACTORS, NON-SI TO SI (METRIC) UNITS OF MEASUREMENT	3
PART I: INTRODUCTION	4
Background	4
Purpose and Scope	6
Site Description	6
Sediment Properties	8
Dredging Volumes	8
Dredging Requirements	8
PART II: DREDGING EQUIPMENT	9
Pilot Study	9
Factors in Equipment Selection	9
Dredging Equipment and Techniques Considered	12
Selection of Dredging Equipment	29
PART III: DREDGING OPERATIONS AND CONTROLS	37
Recommended Operational Procedures	37
Controls for Sediment Resuspension	42
REFERENCES	49

CONVERSION FACTORS, NON-SI TO SI (METRIC) UNITS OF MEASUREMENT

Non-SI units of measurement used in this report can be converted to SI (metric) units as follows:

Multiply	By	To Obtain
acres	4,046.873	square metres
cubic feet	0.02831685	cubic metres
cubic yards	0.7645549	cubic metres
feet	0.3048	metres
inches	2.54	centimetres
knots (international)	0.5144444	metres per second
miles (US statute)	1.609347	kilometres

NEW BEDFORD HARBOR SUPERFUND PROJECT, ACUSHNET RIVER ESTUARY ENGINEERING FEASIBILITY STUDY OF DREDGING AND DREDGED MATERIAL DISPOSAL ALTERNATIVES

EVALUATION OF DREDGING AND DREDGING CONTROL TECHNOLOGIES

PART I: INTRODUCTION

Background

1. In August 1984, the US Environmental Protection Agency (USEPA) reported on the Feasibility Study of Remedial Action Alternatives for the Upper Acushnet River Estuary above the Coggeshall Street Bridge, New Bedford, MA (NUS Corporation 1984). The USEPA received extensive comments on the proposed remedial action alternatives from other Federal, state, and local officials, potentially responsible parties, and individuals. Responding to these comments, the USEPA chose to conduct additional studies to better define available cleanup methods. Because dredging was associated with all of the removal alternatives, the USEPA requested the Nation's dredging expert, the US Army Corps of Engineers (USACE), to conduct an Engineering Feasibility Study (EFS) of dredging and disposal alternatives. A major emphasis of the EFS was placed on evaluating the potential for contaminant releases from both dredging and disposal operations.

2. The technical phase of the EFS was completed in March 1988. However, as part of Task 8 of the EFS, the results of the study were compiled in a series of 12 reports, listed below.

- a. Report 1, "Study Overview."
- b. Report 2, "Sediment and Contaminant Hydraulic Transport Investigations."
- c. Report 3, "Characterization and Elutriate Testing of Acushnet River Estuary Sediment."
- d. Report 4, "Surface Runoff Quality Evaluation for Confined Disposal."
- e. Report 5, "Evaluation of Leachate Quality."
- f. Report 6, "Laboratory Testing for Subaqueous Capping."
- g. Report 7, "Settling and Chemical Clarification Tests."

h. Report 8, "Compatibility of Liner Systems with New Bedford Harbor Dredged Material Contaminants."

i. Report 9, "Laboratory-Scale Application of Solidification/Stabilization Technology."

j. Report 10, "Evaluation of Dredging and Dredging Control Technologies."

k. Report 11, "Evaluation of Conceptual Dredging and Disposal Alternatives."

l. Report 12, "Executive Summary."

This report is Report 10 of the series. The results of this study were obtained from conducting EFS Task 4, element 2, and Task 7, element 1 (see Report 1).

3. Sediment in the Acushnet River Estuary upstream of New Bedford Harbor, Massachusetts, is heavily contaminated with polychlorinated biphenyls (PCBs) and heavy metals. The major alternative for removal of the contaminated sediment involves dredging. As much as 1 million cubic yards* of contaminated bottom sediment is being considered for removal.

4. When contaminated sediments are disturbed, as in dredging operations, contaminants may be transferred to the water column through resuspension of the sediment solids, dispersal of interstitial water, or desorption from the resuspended solids. An investigation of PCB-laden sediments (Fulk, Gruber, and Wullschleger 1975) has shown that almost all the contaminants transferred to the water column were due to the resuspension of solids. The release of contaminants can therefore be decreased by reducing the resuspension of sediment during dredging and disposal operations.

5. Evaluations of dredging equipment and methods to reduce sediment resuspension have been conducted as a part of the Corps' Dredged Material Research Program (DMRP) and the Improvement of Operations and Maintenance Techniques (IOMT) research program (Barnard 1978, Raymond 1984, Hayes 1986). This report is based on a review of these techniques and equipment and their applicability to the dredging conditions in the Acushnet River Estuary near New Bedford.

---

* A table of factors for converting non-SI units of measurement to SI (metric) units is presented on page 3.

Purpose and Scope

6. The purpose of this report is to describe appropriate dredging equipment, techniques, and controls for removal of contaminated sediments from the upper estuary of New Bedford Harbor. The major topic areas described in this report are:

a. Dredging requirements and factors in selection of equipment, pertaining both to removal efficiency and resuspension of sediments.

b. Equipment and techniques considered and the methodology used to select the most appropriate equipment.

c. Operational procedures for the cleanup and control measures for resuspended sediment.

Site Description

7. The area of concern is upper New Bedford Harbor, also called the upper estuary, from Coggeshall Street Bridge to Saw Mill Dam, a distance of less than 2 miles. This section of the river averages about 0.2 mile wide but is approximately 0.4 mile wide at its widest part. The total surface area of the upper estuary at mean tide level is approximately 187 acres. This portion of the Acushnet River is relatively shallow, with a channel depth progressing from 15 to 7 ft and overbank areas of less than 1 to 3 ft mean low water. The mean tide range is 3.7 ft, and expanses of mud flats are exposed at low tide. Freshwater inflow at the Saw Mill Dam was measured between 1972 and 1974 by the USGS and ranged from a monthly maximum of 26 cfs to a monthly minimum of 0.55 cfs. Some ungaged storm sewers also drain into the upper harbor. The average water depths at mean low tide are indicated in Figure 1, which uses the grid cell system developed for the upper estuary as a part of the EFS.

8. The salinities in the upper harbor are typically in the range of 26 to 30 ppt, with less than 1-ppt difference from top to bottom except after heavy rains, when the surface salinity can be much less. Current velocities above the Coggeshall Street Bridge average roughly 0.3 fps, with a maximum of 0.85 fps (see Report 2). The ebb currents are stronger than the flood currents.

9. Another feature of the upper Acushnet River is the restriction at the Coggeshall Street Bridge. The bridge is fixed with an 8-ft-high vertical

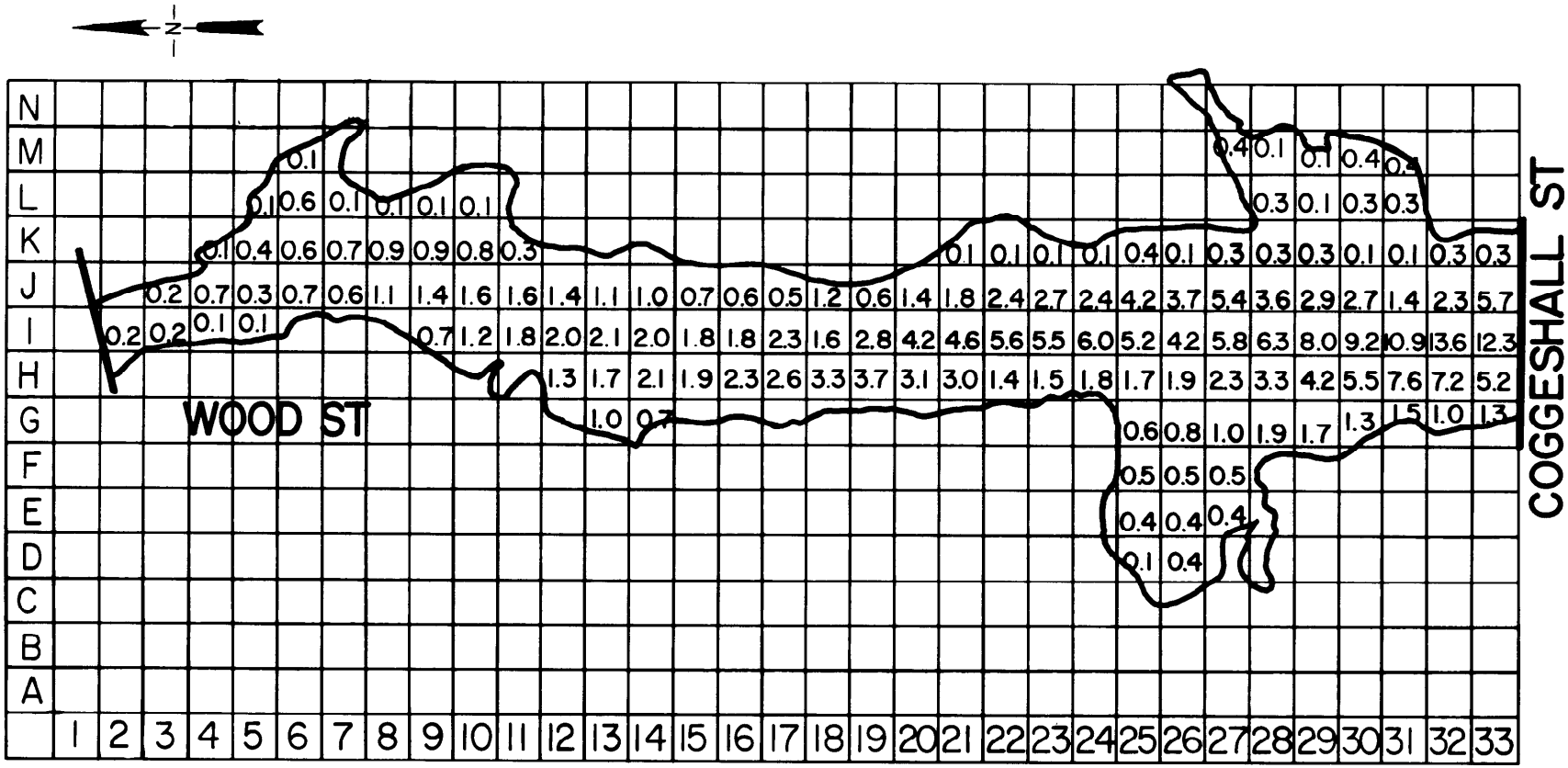

Figure 1. Average water depths at mean low water for upper estuary, New Bedford Harbor

clearance and 62-ft-wide horizontal clearance at mean low water. This restriction places limits on the size of equipment that can be floated into the upper river.

Sediment Properties

10. The sediments to be removed and treated as contaminated are generally classified as silts and clays with a significant fraction of fine sand. There appears to be little physical difference between the surficial contaminated layers and the underlying clean layers to a depth of approximately 4 ft. Field inspections have indicated that there is little debris within the sediment mass, with the exception of visible cobbles and rock fragments and other debris near the shoreline.

11. More detailed descriptions of the physical/engineering and chemical characteristics, including the PCB concentrations of the material, are available elsewhere (Condike 1986). Contaminant concentrations in sediment decrease with depth and are generally restricted to the upper 1 ft of sediment.

Dredging Volumes

12. The contaminated material (the upper 1 ft of sediment for most of the area) plus approximately 1 ft of underlying material will be considered for removal from the project area and disposal as contaminated material. This removal thickness over the entire cleanup area corresponds to approximately 600,000 cu yd of in situ material. A "hot-spot" area immediately adjacent to the Aerovox plant may be removed and handled separately.

Dredging Requirements

13. The basic dredging requirements for this project are to:

   a. Remove and transport the material with a minimum of sediment resuspension and associated contaminant release.

   b. Remove and transport the material at a reasonable rate, minimizing the time period during which sediment resuspension can occur.

   c. Remove the upper contaminated layers with precision such that a minimum of contaminated sediment is left behind.

PART II: DREDGING EQUIPMENT

Pilot Study

14. Early in the evaluations it was determined that a pilot study would be conducted to provide field data on the performance of dredging equipment and the feasibility of disposal alternatives. Detailed descriptions of the pilot study are given in Otis and Andreliunas (1987). The dredging requirements for the pilot study are equivalent to those for a full-scale cleanup project. Therefore, the selection of dredging equipment for the pilot study was aimed at identifying several promising dredge types thought to be most appropriate for the New Bedford project. These equipment types would be directly compared under field conditions, and the results would be considered in the final selection of dredging equipment for a prototype cleanup. The process described in the following sections regarding dredging equipment selection applies to both the pilot study and a prototype cleanup.

Factors in Equipment Selection

15. Based on the basic dredging requirements for the project and the considerations described above, a list of specific factors important in the selection of equipment was developed. The factors considered critical in evaluating dredging equipment for the New Bedford project are discussed below.

Compatibility of pilot and prototype

16. Is the equipment being considered for the pilot study capable of accomplishing an overall cleanup of the upper estuary? Demonstration of equipment during the pilot study must provide information on performance under representative field conditions. It is therefore necessary that equipment selected for demonstration during the pilot be of the same type, size, and operating characteristics as that intended for use in cleanup operations for the full-scale or prototype project.

Availability

17. Will contractors with this equipment be willing and able to work in New Bedford? All cleanup dredging and related construction would likely be accomplished by contracted efforts. Specifying use of readily available

equipment will simplify the contracting process. If specialized equipment is required, it must be obtainable or constructible by contractors. Use of equipment designed or constructed in the United States or for which there is a US licenser is also a factor in availability.

Safety

18. Will the dredging process create additional environmental or health problems? Safety of the dredging/construction personnel and the surrounding population is a major consideration. Volatilization of contaminants is a possibility when sediments resuspended during dredging and transport operations increase contaminant concentrations in the water column. If exposure of dredged material to the atmosphere is minimized, volatilization will also be minimized.

Resuspension of material

19. To what extent will material be resuspended in the water column during the dredging operation? Release of contaminants to the water column occurs to some degree when the sediments are resuspended by the dredging operation. Selection of dredging equipment and operational techniques that have low potential for resuspension at the dredgehead is a major requirement for the New Bedford project. Other sources of resuspension, such as propeller wash from work boats, grounding of scows, and operation of cables, should also be considered.

Maneuverability

20. Will the equipment be able to operate effectively at the site? Cleanup may be required over the entire upper estuary area, encompassing approximately 187 acres of varying depth. Complete coverage of the bottom area by the dredging operation is required. Maneuverability of the equipment within the area is essential and should be accomplished with a minimum of sediment resuspension by work boats, cables, etc. Anything that hits the bottom with force will resuspend sediment. The spuds and anchors used in the positioning, moving, and anchoring of the dredge will stir up sediment in the area of impact. The use of a land-anchored winching system could minimize this problem.

Cleanup precision

21. What is the ability of the equipment to effectively remove PCBs with minimal mixing of clean and contaminated sediment? No existing dredge type is capable of dredging a thin surficial layer of contaminated material

without leaving behind a portion of that layer and/or mixing a portion of the surficial layer with underlying clean sediment. Equipment selected for the New Bedford project should be capable of dredging layers of 1 ft (generally equivalent to the minimum depth of contamination for most of the estuary) with acceptable precision, assuming that a second 1-ft layer would subsequently be dredged to remove any residual contaminated sediment and deeper pockets of contamination.

Cost and production

22. What are the production rates and cost per cubic yard of material removed, and what is the ability of the equipment to minimize overdredging? Although dredging for this project is for the purpose of cleanup and will be done in a controlled fashion, dredging production is an important consideration. Acceptable production rates will lessen the time during which sediments will be resuspended by the operation, minimizing the duration of associated exposures. At the same time, the production must be accomplished with a minimum overdredging of clean sediment, since all material removed during the cleanup must be disposed of as contaminated material with associated higher cost. The rate at which the dredge can complete the dredging project is dependent upon the percent solids, the volume of slurry, and the amount of time the dredge is pumping. It is also a function of the accuracy and control of the vertical and horizontal movement of the dredgehead and the ability to dredge an area with the minimum number of passes.

23. If debris is present in the sediment, it may have to be mechanically removed before a small-diameter hydraulic dredge can work in the area. Dredges with small suction lines (6- to 10-in. inside diameter) are easily clogged. The resulting downtime is nonproductive and costly. The entire dredge cycle of advancement, positioning, dredging, and cleanup should be evaluated and designed with a minimum amount of nondredging time.

Flexibility

24. What is the ability of the equipment to adjust/modify its operation? Equipment and operating techniques must be flexible to adjust to changes in water depths, sediment types, and disposal conditions. Equipment or which the dredging process can be adjusted offers an advantage over equipment that is limited to one method of operation.

Compatibility with disposal options

25. How does the dredging operation meet the requirements of the available disposal options? Two available disposal options, use of a confined disposal facility (CDF) and contained aquatic disposal (CAD), require that the material be transported to a disposal site. Equipment selected for dredging must be compatible with the transport and placement of material at the disposal site. Mechanical excavation and transport in barges would require rehandling (most likely by slurrying) to place material at either a CDF or CAD site. Hydraulic transport would not require rehandling.

Draft

26. Will the equipment be able to operate in the very shallow water (as low as 6 in. at low water)? The required draft of the dredge or its necessary work boats is a major constraint in the upper estuary. Although a portion of the estuary has water depths exceeding several feet at low tide, a majority of the area to be dredged has a water depth less than 3 ft at low tide. Equipment with draft requirements exceeding 2 ft would be constrained to operate during only a portion of the tidal cycle. Draft is also an important factor for the auxiliary vessels that service or reposition the dredge. If the water is shallow, the propeller wash will stir the bottom sediment.

Access

27. Will the equipment be able to reach the dredging site? Equipment must be able to pass through restricted bridge openings (8 ft vertical, 62 ft horizontal) to enter the upper estuary or be capable of being transported by truck.

Dredging Equipment and Techniques Considered

28. All known dredging equipment types were initially considered for this evaluation. This included equipment using the three basic dredging processes (i.e., mechanical, hydraulic, and pneumatic), the equipment types normally employed for conventional dredging operations, and equipment considered to be special-purpose. The dredges included in the evaluation are operational and proven dredges. The descriptions below are not intended to be all inclusive but include dredging equipment that meets the specific requirements of the New Bedford site. A brief description of the equipment types considered is given in the following paragraphs. Operational characteristics of

hydraulic/pneumatic dredges considered are summarized in Table 1. Resuspension characteristics of conventional and some specialty dredges considered are summarized in Tables 2 and 3.

Mechanical

29. Mechanical dredging is the excavation of sediment using such devices as clamshell dredges, dipper dredges, draglines, grab buckets, and in some instances, front-end loaders and backhoes. The dredged material produced is high in solids content, and removal from the dredging site involves the use of barges and tugs to transport the material to the disposal site. At the disposal site the dredged material is dumped through hopper doors, liquified and hydraulically pumped via pipeline, or mechanically rehandled from the barge into the disposal area. The mechanical dredge can be operated from the shore if the area to be dredged is near the water's edge, or operated from a barge that is moved into position and anchored or jacked up on legs.

30. The mechanical dredge, such as a clamshell bucket dredge (Figure 2), usually leaves an irregular, cratered bottom and is responsible for generating a large amount of turbidity throughout the water column (Barnard

Table 1

Operational Characteristics of Hydraulic/Pneumatic Dredges*

Dredge	Percent Solids by Weight	Range of Production Rates cu yd/hr	Vertical Dredging Accuracy ± ft	Horizontal Dredging Accuracy ± ft
Bucket	Up to 100	30-600	2	1
Suction	10-15	25-5,000	1	2-3
Dustpan	10-20	25-5,000	0.5	2-3
Cutterhead	10-20	25-5,000	1	2-3
Hopper	10-20	500-2,000	2	10
Mudcat	10-40	60-150	0.5	0.5
PNEUMA	Up to 80	60-390	1	1
Oozer	Up to 80	450-650	1	2-3
Clean-up	30-40	500-2,000	1	2-3
Refresher	30-40	200-1,300	1	2-3

* From Phillips and Malek (1984).

Table 2

Resuspension Characteristics of Conventional Dredges*

Dredge Type	Downcurrent Distance - Suspended Solids Concentration, mg/ℓ**		
	Within 100 ft	Within 200 ft	Within 400 ft
Cutterhead	25-250	20-200	10-150
Hopper			
With overflow	250-700	250-700	250-700
Without overflow	25-200	25-200	25-200
Clamshell			
Open bucket	150-900	100-600	75-350
Enclosed bucket	50-300	40-210	25-100

* From Hayes (1986).
** Suspended solids concentrations were adjusted for background concentrations.

Table 3

Resuspension Characteristics of Specialty Dredges*

Name of Dredge	Reported Suspended Sediment Concentrations**
PNEUMA pump	48 mg/ℓ, 3 ft above bottom 4 mg/ℓ, 23 ft above bottom (16 ft in front of pump)
Clean-up system	1.1 to 7.0 mg/ℓ 10 ft above suction 1.7 to 3.5 mg/ℓ at surface
Oozer pump	Background level (6 mg/ℓ), 10 ft from head
Refresher system	4 to 23 mg/ℓ, 10 ft from head

* From Hayes (1986) and Herbich and Brahme (in preparation).
** Suspended solids concentrations were adjusted for background concentrations.

1978, Raymond 1984) as compared with other dredge types. The turbidity is a result of sediment resuspension as the bucket impacts on and is pulled off the bottom, water and sediment spillage from the bucket as it is pulled up through the water column and breaks the water surface, and spillage of material as it is loaded into the scow.

31. Turbidity can be reduced with the use of a watertight bucket and carefully controlled operation of the bucket. The watertight bucket has interlocking jaws that seal when the bucket is closed; the top is also covered

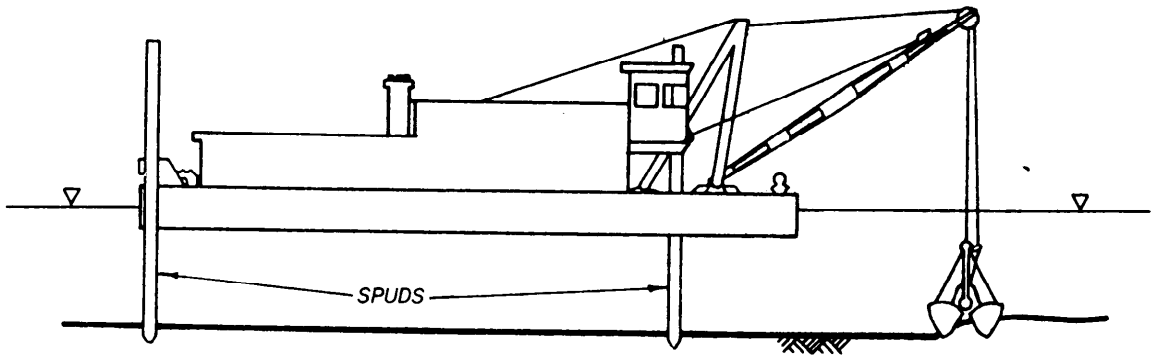

Figure 2. Bucket dredge

so that the dredged material cannot escape once the bucket is closed. A comparison of a 1-cu m bucket with a watertight clamshell bucket indicates that the watertight bucket generates 30 to 70 percent less turbidity in the water column than the typical open clamshell bucket (Barnard 1978). Turbidity levels generally decrease rapidly with distance from the dredge, and the major cause of resuspension appears to be the bucket impact upon the bottom.

32. Each step of the mechanical dredging operation from initial dredging to final placement is subject to spillage and splashing, which allow sediment to return to the water. Additional causes of sediment resuspension when using scows to transport sediment is the effect of propeller wash from work boats and the possibility that the water level might not be deep enough to keep the loaded scow afloat, thus allowing it to touch bottom. Any movement of a grounded scow will cause considerable sediment resuspension.

Hydraulic

33. The hydraulic dredge operates on the principle of the centrifugal water pump. A vacuum is created on the intake side of the pump, and atmospheric pressure acts to force water and sediments through the suction pipe. The dredged materials are usually hydraulically pumped via a pipeline to the disposal site, which can be a CDF or an open-water area. The material can also be placed in barges for removal to the disposal site. Examples of hydraulic dredges are plain suction and cutter-suction, dustpan, sidecast, and trailing hopper dredges.

34. Cutterhead. The simplest form of hydraulic dredge, the plain suction dredge, is used for excavating free-flowing sandy material. An

improvement to the plain suction dredge is the cutterhead, also called the cutter-suction dredge (Figure 3). In this dredge, the suction head is fitted with a rotating basket that can have blades or teeth, depending on the type of material to be removed. As the cutter rotates, it mechanically loosens the bottom sediment and moves it toward the high-velocity flow field near the dredge suction.

35. The cutter-suction dredge is currently the most commonly used dredge in the United States. It is versatile and efficient and is available in sizes from 6 in. to over 30 in. The dredge size is determined by the discharge diameter (inside diameter) of the dredge pump. Usually, the pump suction diameter is slightly larger (about 2 in.) than the pump discharge diameter, which is generally the same size as the discharge pipeline diameter. The dredge is moved into position by a push boat and is held stable by a stern spud that is anchored into the sediment. Anchor cables are placed at a distance from the dredge and are used to control the swing of the cutterhead. The dredging operation consists of the side-to-side movement (swing) of the rotating cutterhead. The maximum sediment removal occurs when the leading edge of the cutter is rotating upward into the swing direction. The return swing can be used as a cleanup of material remaining from the first cut. The dredge is advanced by lowering a second stern spud at the end of a lateral swing. The first spud is then raised, and the dredge advances and pivots on the lowered spud. This walking action allows the dredge to advance with a zigzag dredging action (Figure 4).

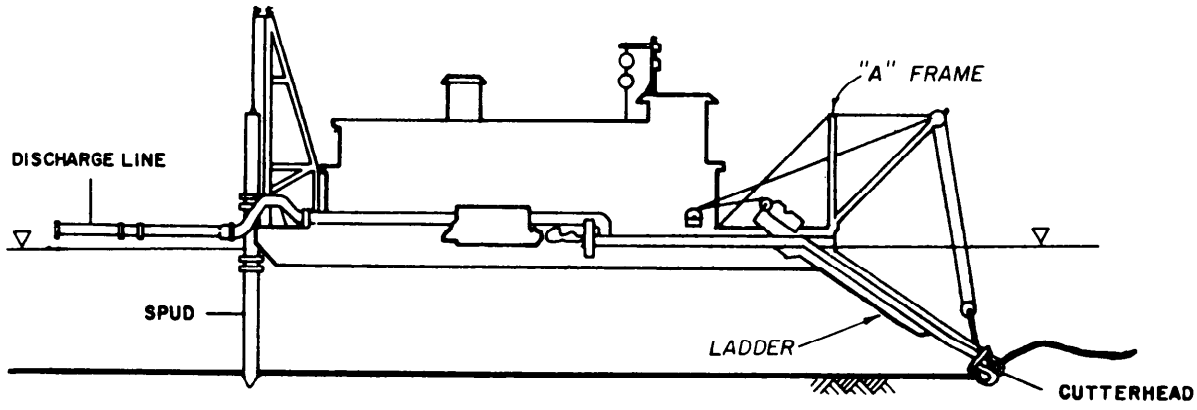

Figure 3. Hydraulic pipeline cutterhead dredge

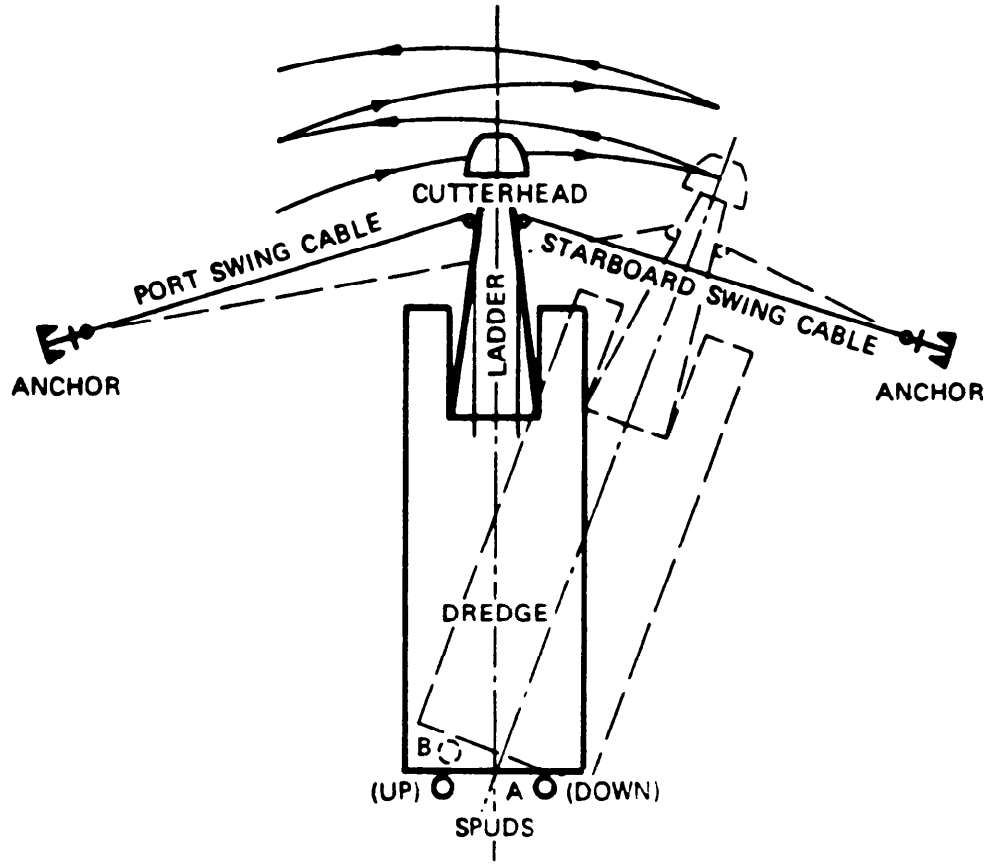

Figure 4. Operation of a cutterhead dredge (viewed from above)

36. Most of the turbidity associated with a cutterhead dredging operation is in the immediate vicinity of the rotating cutterhead. The amount of resuspended sediment decreases rapidly from the cutter to the water surface. Depending on the sediment type, the operational conditions, and the current velocity, turbidity levels also decrease rapidly with distance from the cutter. Turbidity can be reduced by controlling the cutterhead rotation speed, swing speed of the ladder, and the cutterhead operational procedures. Undercutting, cutting into the swing of the cutterhead, produces less resuspended sediment than overcutting, cutting away from the swing direction of the cutterhead (Koba and Shiba 1982). This is illustrated in Figure 5. The avoidance of large sets and very thick cuts and the use of close concentric swings to reduce the occurrence of windrows between cuts are other operational procedures that can be employed to reduce the resuspension of sediment (Raymond 1984). Raymond (1984) observed that a cutter swing speed greater than 0.5 fps resulted in substantial sediment resuspension and that, by reducing the swing

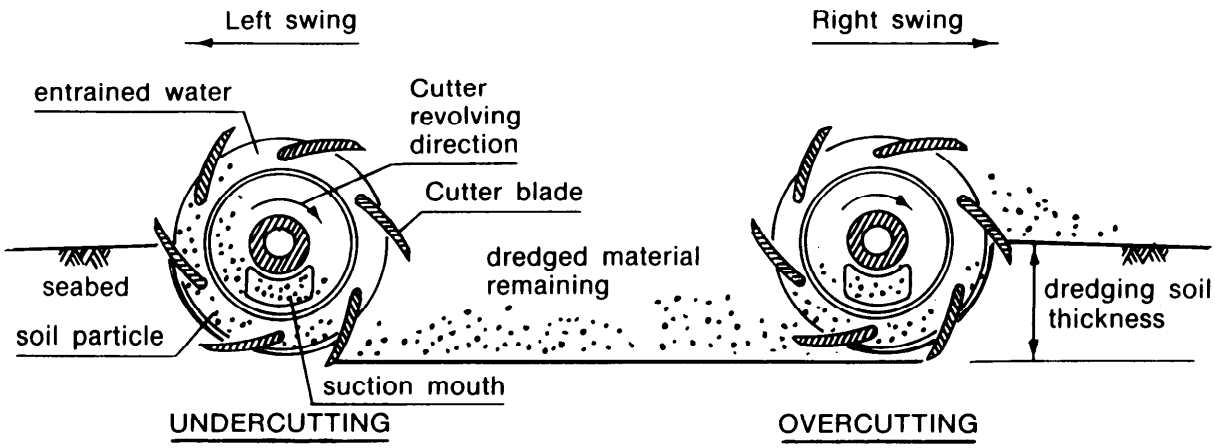

Figure 5. Cutting operation (front view)

speed to 0.3 fps, the resuspension was reduced without seriously affecting the dredge efficiency. He also suggested that a cutter rotation speed of 30 rpm was most efficient and, if possible, the use of a plain suction without cutterhead could reduce resuspension by about one half relative to a cutterhead. Attempts to reduce turbidity in the area of the cutterhead have resulted in hoods, shields, or covers of various types being used. These shields seem to increase velocities and turbulence near the bottom, causing increased entrainment, and help prevent turbid water from reaching the surface (Herbich and Brahme, in preparation).

37. Dustpan. Another type of hydraulic dredge is the dustpan dredge (Figure 6). The suction head is almost as wide as the dredge and resembles a large vacuum cleaner or dustpan. Used primarily in rivers with free-flowing sandy sediments, the dustpan head is fitted with water jets to loosen and agitate the bottom material for easier entrainment into the dredge suction. The dredge advances into the cut by use of cables and anchors, although this type of dredge can also be self-propelled. The channel bottom after dustpan dredging is wide and smooth and does not require the cleanup that might be needed when using a clamshell or cutterhead dredge. Sediment resuspension is concentrated in the area of the dustpan head and is increased if water jets are used.

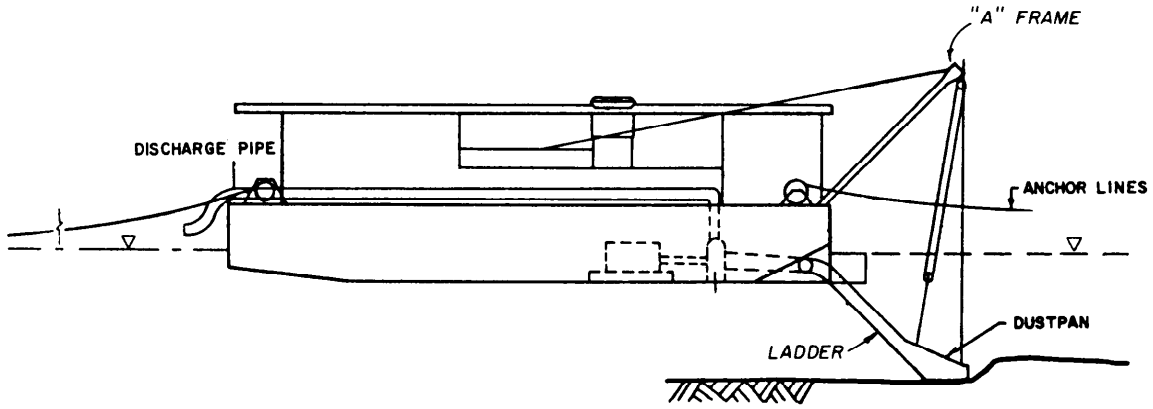

Figure 6. Dustpan dredge

38. Sidecast and hopper. Sidecast and trailing hopper dredges are self-propelled dredges that operate by a dragarm fitted with a draghead in contact with the bottom (Figure 7). The sidecast dredge discharges the dredged sediment into open water through an elevated discharge boom that is generally between 75 and 100 ft long. A hopper dredge discharges the dredged material into hoppers built into the vessel. The dredged material is emptied from the hoppers by means of hopper doors in the bottom of the vessel or pumped out via a pipeline to a CDF. The sidecast and hopper dredges are usually large vessels that can operate in the wave environment of the open ocean. The method of operation of hopper dredges and the shallow-water condition for the New Bedford project precluded any further consideration of this type of equipment.

Pneumatic

39. Pneumatic dredge systems use compressed air instead of centrifugal motion to pump slurry through a pipeline (Richardson et al. 1982). The principle under which the pump operates is the pressure differential between the pressure in the chamber and the hydrostatic pressure of water outside the pump. The chamber is lowered into position and the inside air is released to the atmosphere, producing atmospheric pressure in the chamber. The pressure difference between the inside and the outside of the chamber forces water and sediment into the chamber. The entrance valve is then closed and air is pumped into the chamber, increasing pressure and forcing the slurry out the discharge valve.

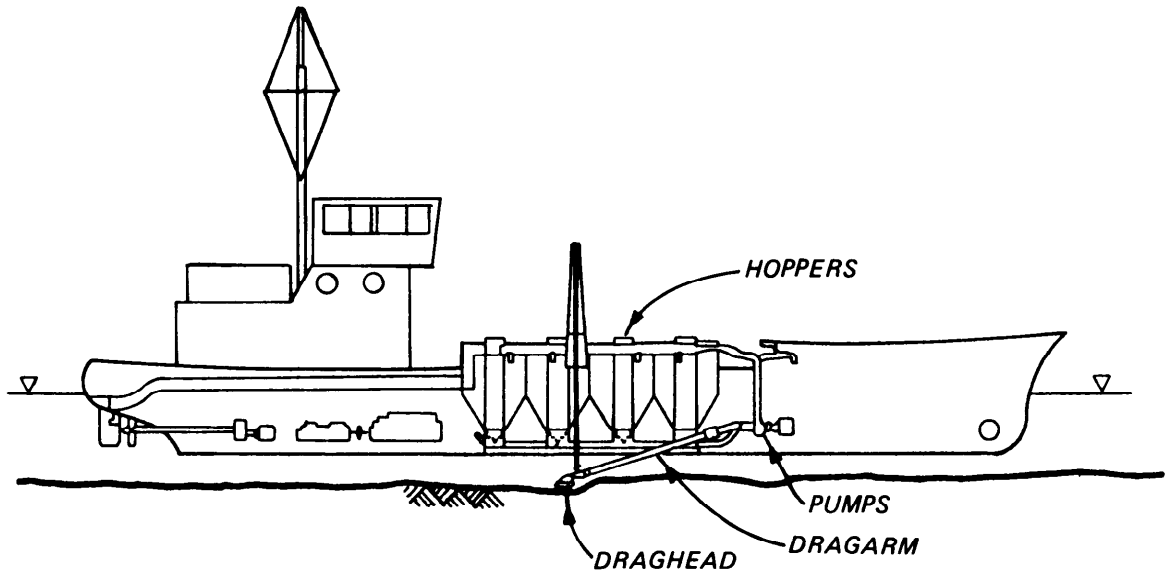

Figure 7. Self-propelled seagoing hopper dredge

40. Pneumatic dredging systems have been developed in Italy and Japan. The Italian device called the PNEUMA pump consists of three chambers, each connected to a common discharge line above the pressure vessels. The chambers are operated so that the filling and emptying cycles are out of phase but overlap enough to minimize discharge surging (Richardson et al. 1982).

41. Turbidity levels around the PNEUMA dredge are extremely low, and high concentrations of low-viscosity materials can be dredged. The PNEUMA dredge is mounted on a barge with a crane to raise and lower the pump body. The pump is placed in position and pulled through the sediment. Different opening configurations can be used to suit the sediment being removed (Figure 8).

42. The AMTEC system is the latest generation design of the basic PNEUMA pump and has the capability of being fitted with suction-assist mechanisms to improve performance in shallow-water applications. Theoretically, dredging could be accomplished in a water depth of as little as 1 ft with a production rate of 48 cu yd per hour and a solids volume of 40 percent of total discharge volume. However, the recommended minimum working water depth for the AMTEC pump is about 12 ft at the present stage of development.* In

* Personal Communication, 24 March 1987, Mr. Lim Vallianos, US Army Engineer Waterways Experiment Station, Vicksburg, MS.

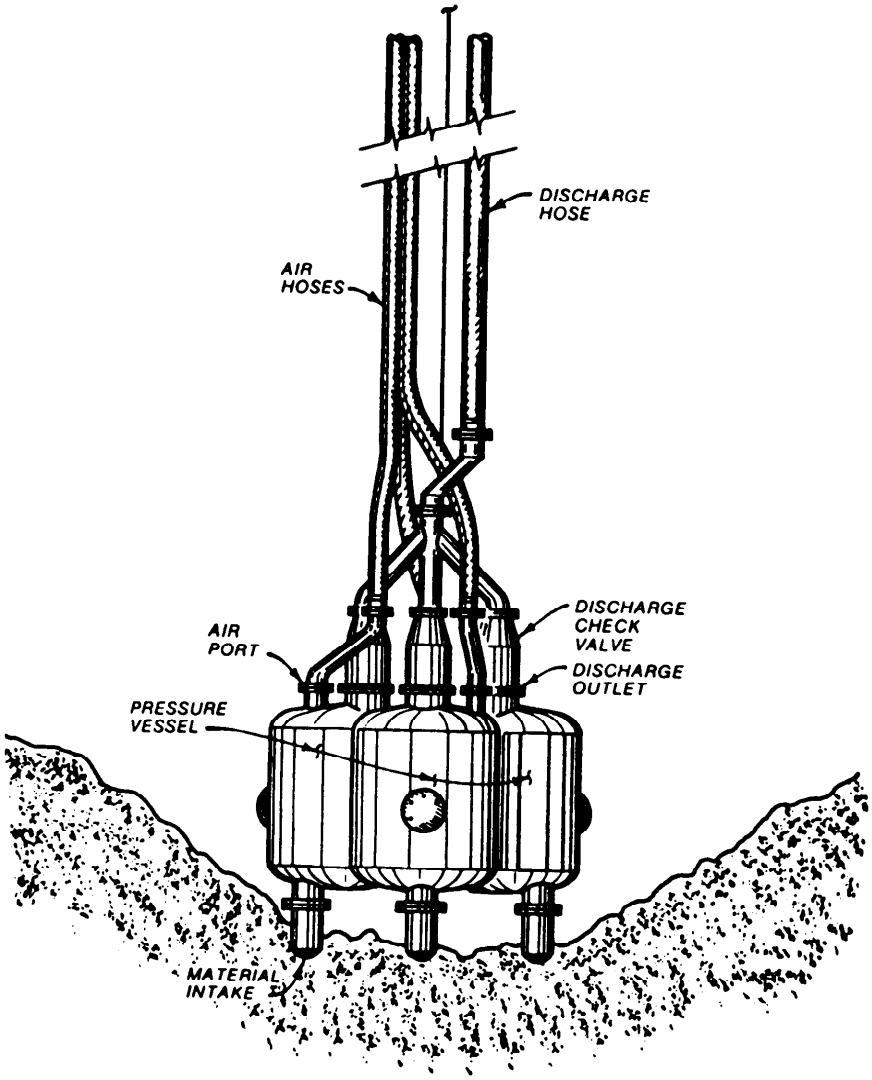

PNEUMA Pump Body

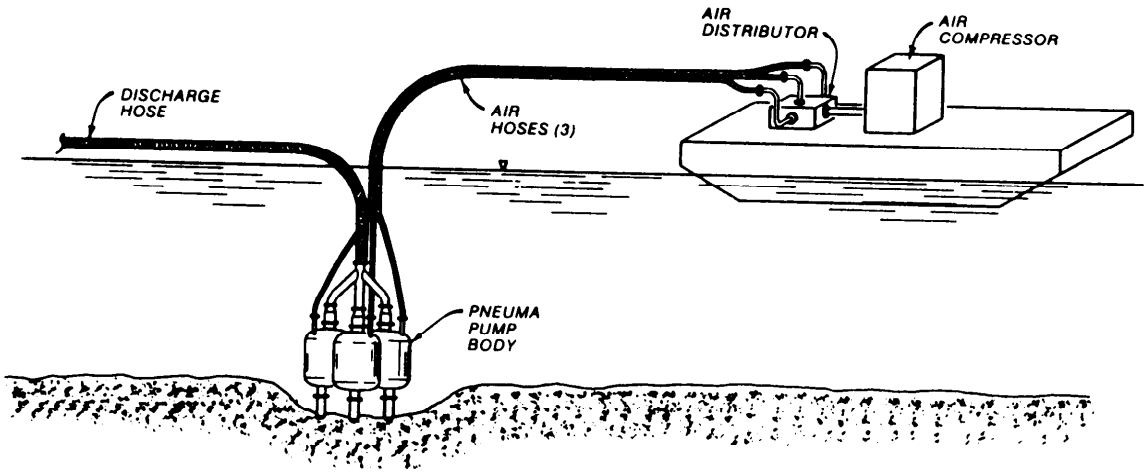

Figure 8. PNEUMA pump

view of the extreme shallow-water (1 to 6 ft) dredging requirements associated with the New Bedford Harbor site and the relatively large minimum working depth of the AMTEC pneumatic system, this type of dredging equipment has limited potential application.

Specialty dredges

43. Although there are three major types of dredges, many dredges combine more than one operational principle to produce a dredge suited to specific conditions. Many of the features incorporated in specialty dredges are attempts to reduce sediment resuspension at the dredgehead.

44. Oozer dredge. The Oozer dredge, developed in Japan, is a two-cylinder modification of the PNEUMA pump. To overcome the problem of operating at shallow depths, a partial vacuum is created in the pump chambers during the filling phase (Figure 9). The use of vacuum and air pressure permits removal of soft sediment at in situ density. This means the solids content of the dredge slurries can be as high as 70 percent (Koba, Shinohara, and Sato 1975). A modification to this dredge has been the incorporation of a rotating blade parallel to the sediment surface that pushes the material into the dredge intake.

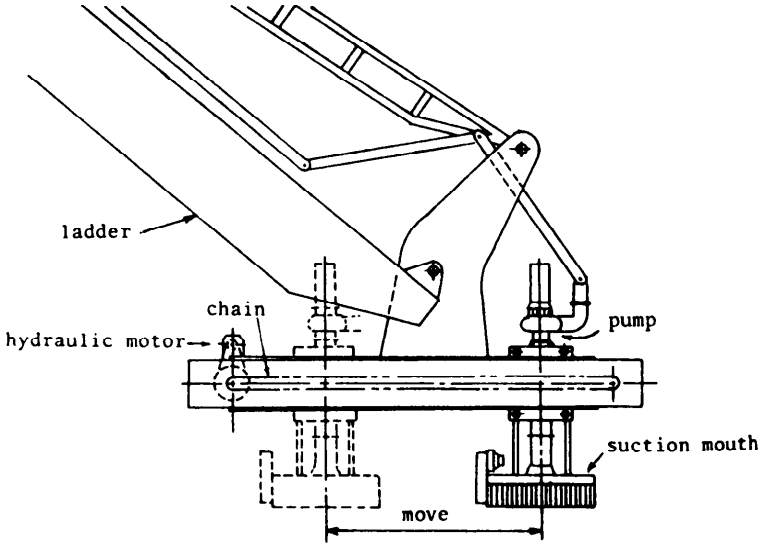

Figure 9. Schematic of Oozer dredge system

45. Clean-up dredge. The Clean-up dredge, also developed in Japan, was designed for dredging highly contaminated sediment (Sato 1976). The Clean-up head consists of a shielded auger that collects sediment as the dredge swings back and forth and guides it into the suction of a submerged centrifugal pump (Figure 10). The auger is shielded, and a movable wing covers the sediment as it is being collected by the auger. The device also has a means for collecting and venting gas bubbles released during dredging, an underwater television system to observe sediment resuspension, and bottom-detecting sonar devices to indicate bottom elevation in front of and behind the head (Barnard 1978).

46. Matchbox dredge. The Matchbox dredge has been used in Holland for dredging contaminated sediment. It is designed to dredge fine-grained sediments at near in situ density and keep resuspension to a minimum. The Matchbox is a plain suction dredgehead enclosed in a housing that resembles a matchbox. The housing collects escaping gas bubbles, and valved openings on each side of the suction head allow the leeward opening on each swing to be closed to avoid an influx of water (Figure 11). A comparison test of sediment resuspension of a matchbox suction head and a cutterhead was conducted by the USACE in Calumet Harbor, Illinois, on Lake Michigan. As the matchbox head is new to this country, the dredge operator was inexperienced in determining the location of the head, a factor that affected the quality of some data. In general, the report concluded that the matchbox is capable of removing sediment with very little resuspension. It also concluded that the cutterhead showed very little resuspension when operated properly (Hayes, McLellan, and Truitt 1988).

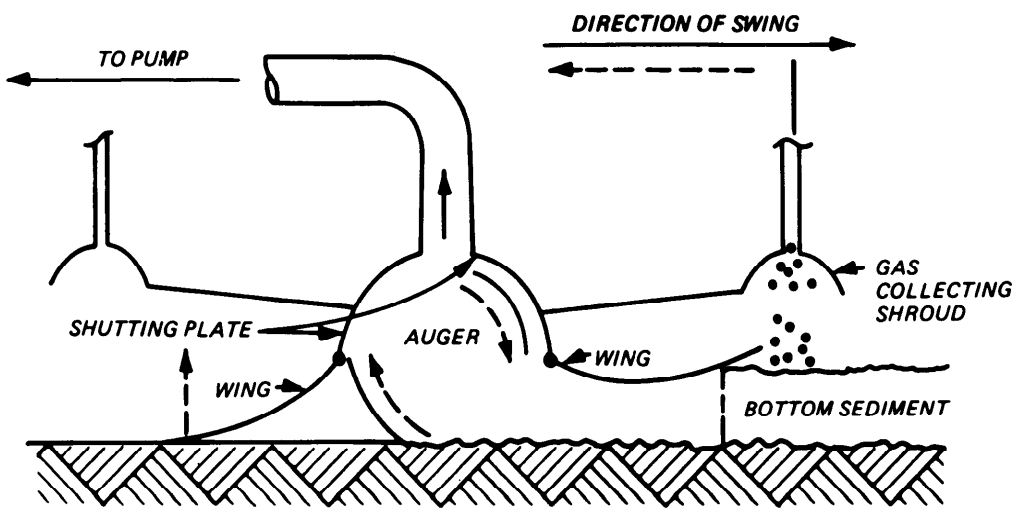

Figure 10. Suction head of Clean-up dredge system

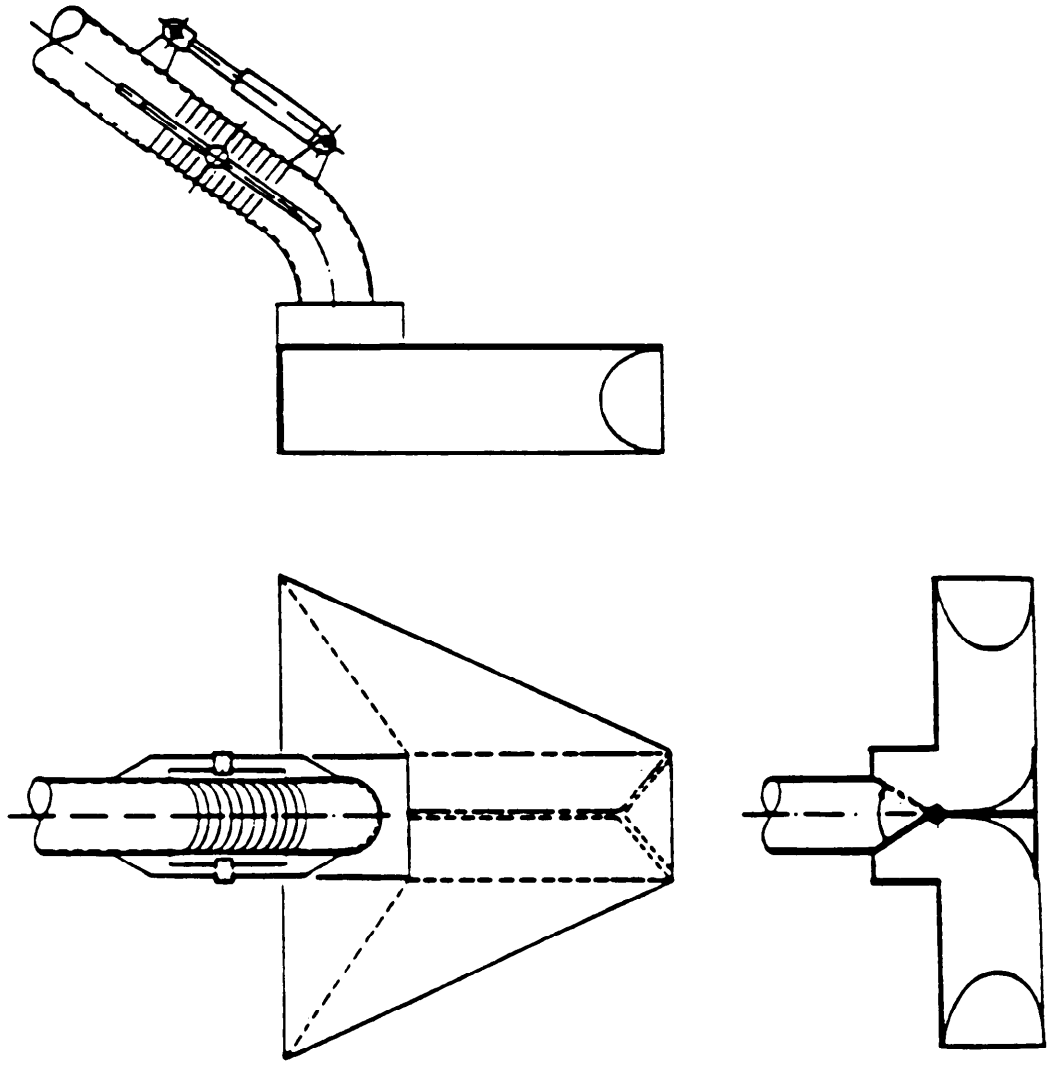

Figure 11. Matchbox head

47. Waterless dredge. The Waterless dredge is a dredging system developed by the Waterless Dredging Company that encloses the cutter and centrifugal pump in a half-cylindrical shroud. As the cutterhead is forced into the sediment, the cutting blades remove the material near the front of the cutterhead with little entrainment of water. The manufacturer estimates a solids content of 30 to 50 percent by weight with very little turbidity generation. Dredge pipeline size ranges from 6 to 12 in. (Barnard 1978).

48. Refresher system. The Refresher system developed by the Japanese is a modification of the cutterhead dredge. Similar to the Waterless dredge, the Refresher uses a helical-shaped gather head to feed sediments into the

suction, with a cover over the head to reduce resuspension (Figure 12). Comparison tests of the Refresher system and a cutterhead operating under similar conditions indicate that the Refresher system produced one-fiftieth of the total resuspension produced by the cutterhead dredge (Raymond 1984).

49. Horizontal auger dredge. Small portable horizontal auger dredges are equipped with cutter knives or spiral augers that cut and move the material toward the suction. The Mudcat (Figure 13) and VMI dredges are examples of this type of equipment. Designed to remove fine-grained sediments, small portable dredges can float in water as shallow as 21 in. Movement of the dredge through the water is controlled by winching along a cable anchored on the shore. In some designs the cutterhead is surrounded by a mudshield that is effective in minimizing turbidity by entrapping suspended sediment. Manufacturers claim that discharges with as much as 60-percent solids have been obtained. This cutter design can remove a layer of material 8 ft wide and leaves the bottom flat and free of windrows and ridges that are typical of cutterhead and clamshell dredge operations (Barnard 1978).

50. Delta dredge. The Delta dredge, developed by the Delta Dredge Corporation, is a portable device that removes sediments at high concentrations using a submerged pump mounted directly above twin counter-rotating horizontal cutters (Figure 14). The cutters are reversible, variable-speed blades that enable equal production rates on both right and left swings. A 7.5-ft-wide swath of material is removed with each swing with minimal disturbance to the surrounding sediment (Barnard 1978).

51. Bucket Wheel dredge. The Bucket Wheel dredge is a combination of the best of the bucket dredge and the hydraulic cutterhead dredge. Developed by Ellicott Machine Corporation International, it incorporates a bucket dredge wheel with a suction mouth (Figure 15). The dredge wheel has bottomless buckets placed close together that dislodge sediment and lift it into the suction mouth within the wheel. The positive-feed feature allows control over the percent solids passing into the pump by controlling the wheel rotating speed and/or dredge swing speed to achieve the required solids-water ratio. The Bucket Wheel is also available as the Dual-Wheel Excavator and can be fitted with a silt shield to keep silt disturbance to a minimum. Data are not available on the turbidity generation of the Bucket Wheel dredge (Barnard 1978). This dredge type was eliminated from further consideration.

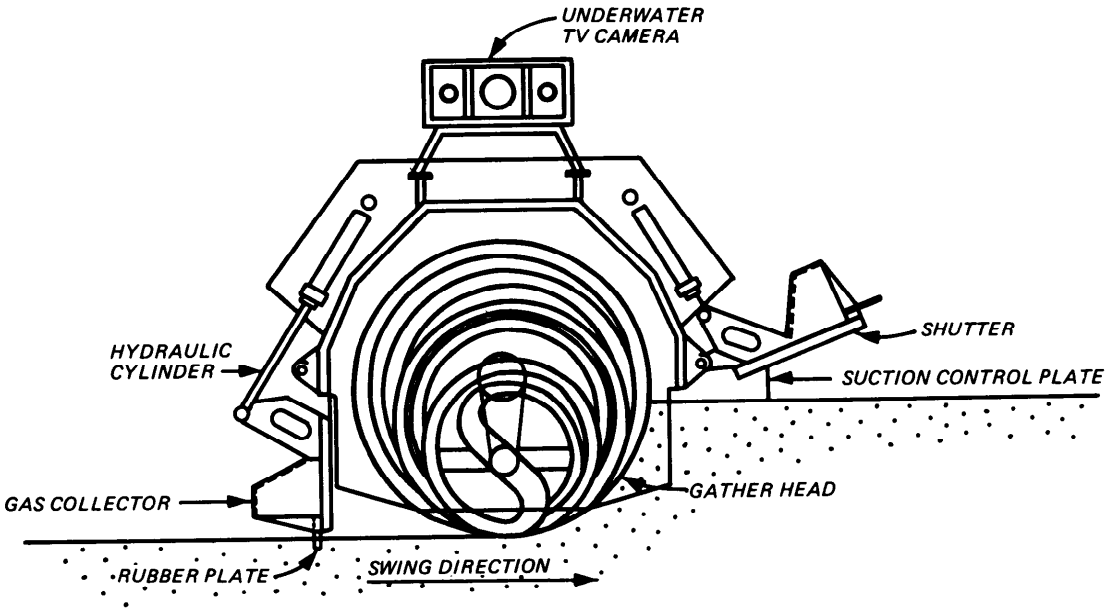

a. Front view

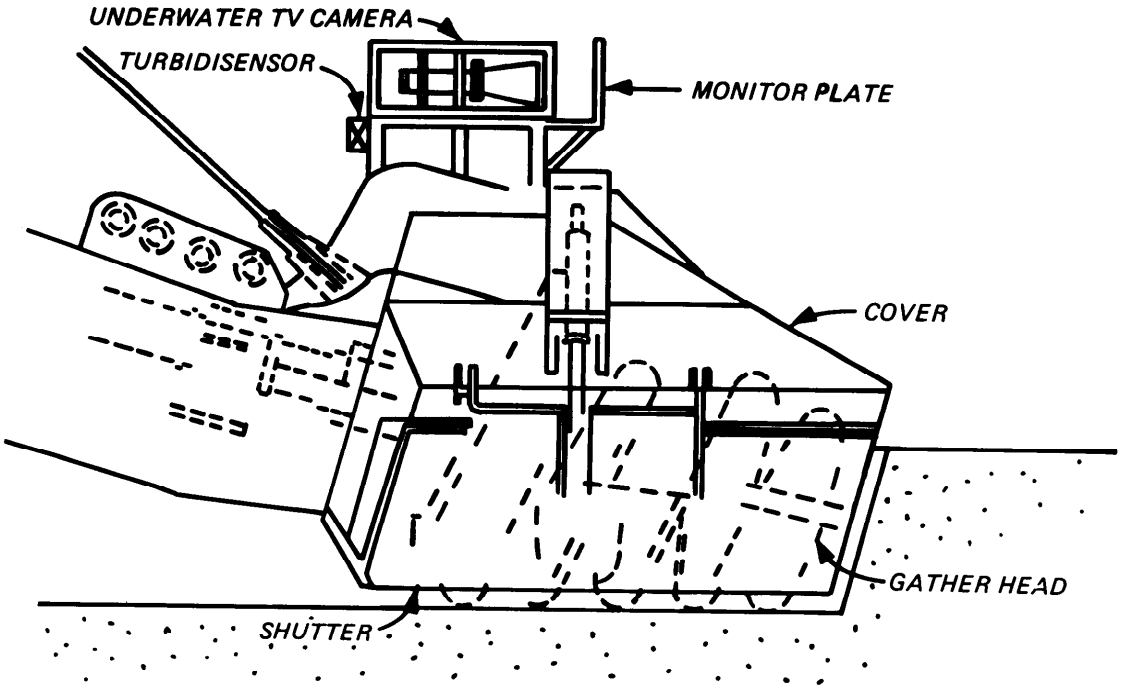

b. Side view

Figure 12. Front and side views of Japanese Refresher system (from Kaneko, Watari, and Aritomi 1984)

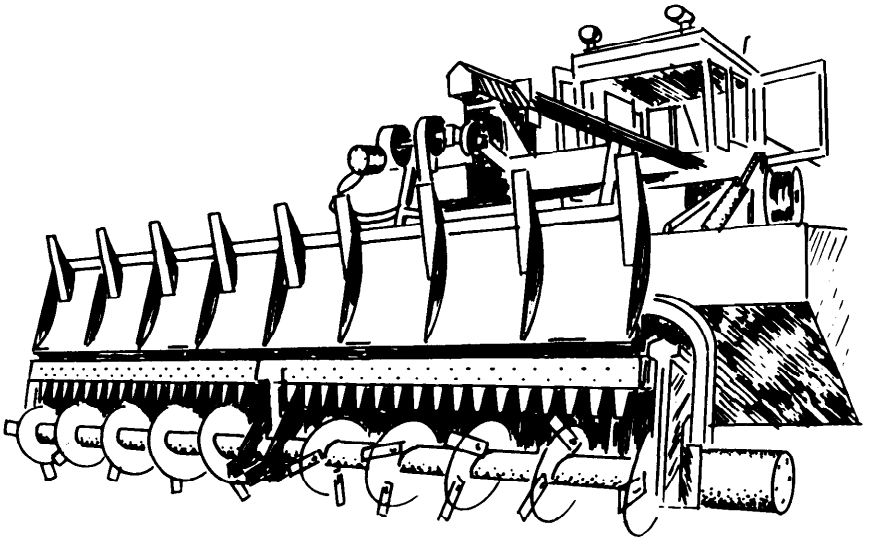

Figure 13. Horizontal cutterhead of the Mudcat dredge showing cutter knives and spiral auger (courtesy of Mudcat Division, National Car Rental Systems, Inc.)

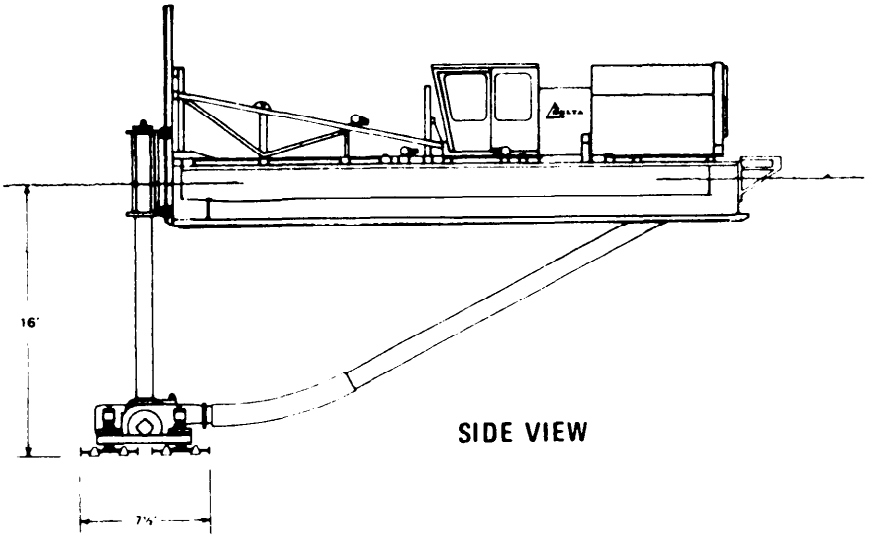

Figure 14. Delta dredge (from Barnard 1978)

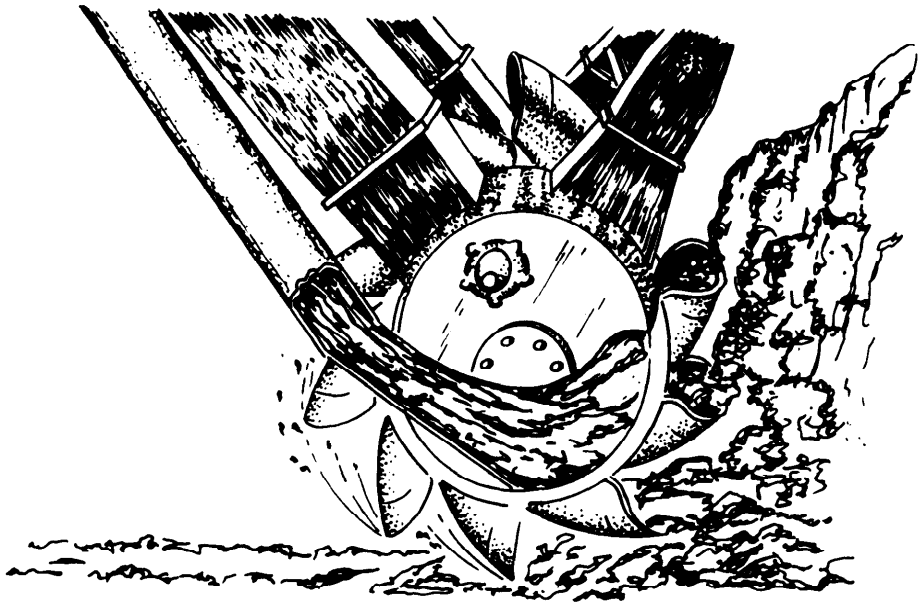

Figure 15. Bucket Wheel dredge

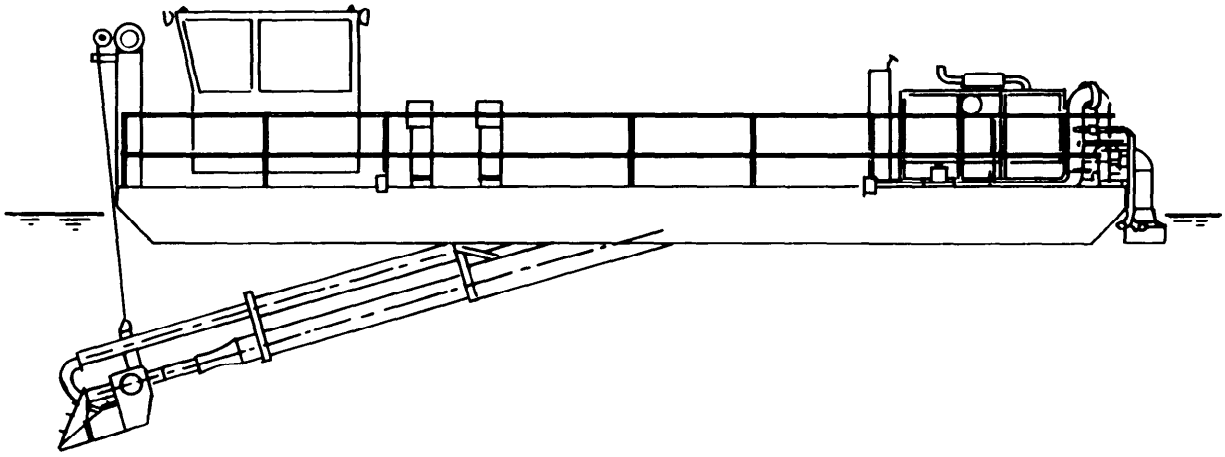

Figure 16. Muck Duck dredge - jet pump

52. Jet pump. The jet pump principle can also be used on a dredge (Figure 16). It is different from other pumps in that it contains no moving parts and is powered by a jet of water. The basic principle of jet pump

operation is the exchange of momentum within the pump. Clear water, normally supplied by a centrifugal pump, enters the jet pump through a nozzle as a turbulent jet. In the mixing chamber, turbulent mixing occurs between the water jet and a sand-water mixture drawn into the suction tube. This mixing causes a transfer of momentum from the jet to the sand-water mixture. The sand-water mixture is diluted by the jet water and passes through the diffuser section, causing more sand-water mixture to be drawn into the suction tube (Richardson and McNair 1981).

Selection of Dredging Equipment

Methodology

53. Selection of equipment to be demonstrated in the pilot study was based on a consensus rating by USACE personnel knowledgeable in the operation and capabilities of the various dredge types.

54. An initial meeting involving personnel of the US Army Engineer Waterways Experiment Station (WES) and the US Army Engineer Division, New England (NED), was held to discuss dredging equipment and to develop a rating system that could be used for the pilot study. Equipment considered and rated for the pilot study had to be capable of performing the full-scale cleanup. A tentative rating of equipment resulted from this meeting. A second meeting involving WES, NED, US Army Engineer Division, Missouri River, and USACE Dredging Division personnel was held to refine the ratings and finalize equipment selection.

Ratings

55. Nine dredge types were identified for rating, as listed in Table 4. The clamshell dredge was the only mechanical dredge rated. All others identified for rating were hydraulic or pneumatic. Small cutterhead and shrouded cutterhead dredges were rated as separate categories. Dustpan and matchbox dredgeheads, considered adaptable to conventional hydraulic dredges, were rated separately. The Mudcat, although considered a portable hydraulic dredge, was rated separately because of its unique auger dredgehead and cable anchoring system. The Dubuque, a 12-in. hydraulic dredge used in demonstrations at Indiana Harbor, was rated separately because it was Corps-owned and had fabricated cutter and matchbox heads. The Oozer, Refresher, Clean-up, and

Table 4

Equipment Ratings

Dredge Type	Total Rating	Rating by Individual Factor										
		Availability	Safety	Resuspension	Maneuverability	Cleanup	Cost and Production	Flexi-bility	Compatibility CAD	Compatibility CDF	Draft	Access
Mudcat	32	3	3	3	3	3	3	2	3	3	3	3
Small cutter	29	2	3	2	2	2	3	3	3	3	3	3
Matchbox	29	1	3	3	2	3	2	3	3	3	3	3
Shrouded cutter	27	1	3	2	2	2	2	3	3	3	3	3
Dustpan	26	1	3	2	2	3	2	2	3	3	2	3
Japanese	23	1	3	3	2	2	1	2	3	3	2	1
Dubuque	21	1	3	2	1	2	2	3	3	2	1	1
PNEUMA	21	1	3	3	2	2	1	1	3	2	1	2
Clamshell	20	3	2	1	2	1	1	3	1	2	2	2

other specialty dredges were grouped under the classification "Japanese" because of similarities in availability and other characteristics.

56. The various factors considered in evaluating dredging equipment, the ratings given (shown in parentheses), and a discussion of how the rating for each piece of equipment was determined are presented in the following paragraphs. Each dredge was given a comparative rating between 1 and 3 for each factor, three being the best rating. For this evaluation, each factor was considered to be of equal importance.

Availability

57. Will contractors with this equipment be willing and able to work in New Bedford?

a. Mudcat and clamshell dredges (3). Numerous contractors in the general area have this equipment.

b. Small cutterhead dredge (2). This equipment is available but is located farther away.

c. Other dredges (1). The remainder of the equipment is either a speciality item or is located a considerable distance from New Bedford.

Safety

58. Will the dredging process create additional environmental or health problems?

a. Hydraulic and specialty dredges and PNEUMA (3). This equipment was rated highest because it removes the material in a slurry form and delivers it directly to the disposal site.

b. Clamshell dredge (2). This equipment was rated lower because it exposes the material to the atmosphere during the dredging process and requires the rehandling of the dredged material at the disposal site.

Resuspension

59. To what extent will material be resuspended in the water column during the dredging operation?

a. Mudcat and matchbox dredge (3). Rated highest because the matchbox and hood over the auger were thought to reduce resuspension.

b. PNEUMA (3). Also rated highly since there is no mechanical action to stir the material. Some sediment may be disturbed during movement of the dredge through the sediment.

c. Japanese dredges (3). Dredging action was considered similar to a PNEUMA or some type of hooded cutterhead; thus, it was rated highly.

d. Cutterhead dredges (2). Rated lower due to the action of the cutterhead.

e. Dustpan (2). Rated lower due to the action of the water jets. Could be rated higher if water jets are shut off.

f. Clamshell dredge (1). This equipment was rated the lowest for several reasons. The dredging process results in higher sediment resuspension. The material must also be rehandled prior to final disposal. Also, other equipment that is involved (scows, workboats) would stir up material when working in shallow areas. Past field data indicate that the clamshell (even a closed bucket) results in higher sediment resuspension than a hydraulic dredge. Also, once the operating clamshell is lifted from the bottom, the bank can slough, causing further resuspension.

Maneuverability

60. Will the equipment be able to operate effectively at the site?

a. Mudcat (3). Rated highest because of its ability to work in shallow water and to work off a cable system rather than spuds. The machine digs in a straight line instead of an arc.

b. Clamshell, cutterhead, dustpan, PNEUMA, matchbox, and Japanese dredges (2). This equipment was rated lower because it operates off either spuds or anchors and requires deeper water.

c. Dubuque (1). Rated lowest because of its relatively large size.

Cleanup

61. What is the ability of the equipment to effectively remove PCBs with minimum mixing of clean and contaminated sediment?

a. Mudcat (3). Rated highly because it operates off a cable system with greater control over the depth of cut; also, the hood reduces resuspension.

b. Matchbox dredge, dustpan (3). Rated highly due to the control over the dredging operation and the matchbox/hood that reduces resuspension.

c. Cutterhead dredges (2). Rated lower because of the resuspension of material caused by the cutterhead.

d. PNEUMA (2). Rated lower because the dredging operation may leave some spots undredged.

e. Japanese dredges (2). Rated lower due to lack of understanding of their operation in shallow water.

f. Clamshell dredge (1). This equipment was rated lowest for several reasons. The dredging operation may leave spots undredged. The resuspension potential is also high. Control is less with respect to overdredging, and sloughing of the banks may leave contaminated sediment on the bottom.

Cost and production

62. What are the production rates and cost per cubic yard as well as the ability of the equipment to minimize overdredging?

a. Mudcat and small cutterhead dredges (3). This equipment was rated highest. Contractors with this equipment are located in the general area and the equipment can work effectively in the shallow-water conditions. The dredging operation can also be controlled to reduce overdredging.

b. Dubuque, dustpan, shrouded cutterhead, and matchbox dredges (2). The dustpan and Dubuque were rated lower due to the cost of getting the equipment to New Bedford. The latter two were rated lower due to the cost of fabricating and installing these attachments to a dredge.

c. Clamshell dredge (1). This equipment's rating was low because it requires rehandling of the material and would involve more overdredging.

d. Japanese dredges (1). Rated low due to the cost of transporting the equipment to New Bedford.

e. PNEUMA (1). Rated low because it is not located in the area and because it would have a low production rate compared with the other equipment. The owners of this equipment indicated that steps are being taken to modify the PNEUMA to improve its performance in shallow water. However, this modified equipment is still in a development stage, and performance has not been field demonstrated.

Flexibility

63. What is the ability of the equipment to adjust/modify the dredging operation?

a. Clamshell dredge (3). Rated highly because it can be used in several different ways. The equipment could work off a barge or off land. Different size buckets could also be used, and these could be modified.

b. Cutterhead dredges and matchbox (3). This equipment was rated highly because of its ability to adjust the width and depth of the cut.

c. Mudcat and dustpan dredges (2). This equipment was rated lower because it works off a cable system and makes a straight cut, 8 ft in width. The dustpan has similar constraints.

d. Japanese dredges (2). Rated lower due to lack of information regarding flexibility of operation.

e. PNEUMA (1). This equipment was rated low because it operates in only one way.

Compatibility with CAD disposal option

64. How does the dredging operation meet the requirements of the CAD disposal option?

a. Small hydraulic, PNEUMA, and Japanese dredges (3). This equipment was rated highest because it pumps the material at a controllable rate directly to the site, where it can be placed with some degree of control.

b. Dubuque (3). Rated highly but, because of its size, may overload pilot study site.

c. Clamshell dredge (1). Rated lowest. Material would have to be rehandled for disposal. It would also be difficult to control placement of cap material over the contaminated sediment.

Compatibility with CDF disposal option

65. How does the dredging operation meet the requirements of the CDF disposal option?

a. Small hydraulic and Japanese dredges (3). Rated highest because material can be pumped directly to the site at a desirable rate.

b. Clamshell dredge (2). Rated lower because material must be rehandled.

c. Dubuque (2). Rated lower because of its size with regard to the pilot study site.

d. PNEUMA (2). Rated lower because of its production rate.

Draft

66. Will the equipment be able to operate in the very shallow water (6 in. at low water)?

a. Mudcat, matchbox, and small cutterhead dredges (3). These vessels can operate in very shallow water (20 to 30 in.) and were rated highly.

b. Dustpan dredge (2). This is a larger vessel; therefore, it was rated lower.

c. Clamshell dredge (2). Rated lower because the equipment operates off a barge whose movement would be restricted. The movement of the scows that would be used with the dredge would also be restricted.

d. Japanese dredges (2). Rated lower due to their size and draft requirements.

e. PNEUMA (1). Rated low because it does not operate well in shallow water.

f. Dubuque (1). Rated low because size of equipment would restrict operations.

Access

67. Will the equipment be able to reach the dredging site?

a. Mudcat and small cutterhead dredges (3). Rated highest because they would not be impacted by the bridge clearance and are available in the general area.

b. Clamshell dredge (2). Rated lower because it would be impacted by the bridge and the lack of waterfront facilities.

c. PNEUMA (2). Rated lower because it is not readily available. Should not be impacted by bridge.

d. Japanese dredges (1). Rated low because of relative size of the equipment and the distance to New Bedford.

e. Dubuque (1). Rated low because of the distance to New Bedford and the problems getting it to the work site.

Equipment selected

68. As shown in Table 4, the Mudcat dredge received the highest rating (32 points of a possible 33), followed by the small cutterhead and the matchbox (each with a rating of 29). Based on the ratings, these three hydraulic dredge types were selected for demonstration during the pilot study. The cutterhead and matchbox dredges would be demonstrated using the same small hydraulic dredge plant, while a Mudcat dredge would be demonstrated separately. The relative performance observed during the pilot will be the basis for final recommendations on which dredge type should be used for a full-scale cleanup involving dredging. A summary of the major advantages of the hydraulic dredging process and these specific dredgeheads is given in the following paragraphs.

69. Hydraulic dredging process. The hydraulic dredging process (used by the Mudcat, cutterhead, and matchbox) offers the following major advantages over mechanical processes:

a. Small hydraulic dredges can be used more effectively in the shallow water of the upper estuary, with greater maneuverability, flexibility, and production.

b. The material can be pumped directly to the disposal site, without need for rehandling or exposure to the atmosphere.

c. Hydraulic dredges can remove contaminated material with higher precision and lower sediment resuspension than mechanical dredges.

70. Mudcat dredge. The Mudcat offers the following advantages:

a. The Mudcat uses a cable and winch system, anchored onshore, which would allow the dredge to work in parallel and overlapping cuts, leaving a flat-bottomed cut with no windrows. This

operation has a greater potential for control and precision removal of contaminated material.

b. The Mudcat has an auger-type head with attached hood, which should reduce sediment resuspension and increase the solids content of the slurry.

71. Small cutterhead. The cutterhead offers the following advantages:

a. The cutterhead is considered to be the "standard" hydraulic dredge type and is widely available.

b. Cutterhead operation can be optimized with respect to resuspension by varying cutter rotation, swing speed, and cutter burial.

c. Since cutterhead is most frequently used, many experienced, capable operators are available. The skill of the dredge operator is a major factor in optimization of this dredging technique.

72. Matchbox. The matchbox offers the following advantages:

a. The dredgehead design holds potential for lower sediment resuspension than a conventional cutterhead.

b. The matchbox can be easily compared with the cutterhead using the same hydraulic dredge.

PART III: DREDGING OPERATIONS AND CONTROLS

Recommended Operational Procedures

Grid cells

73. The grid cell system established for sampling is recommended for use in visually referencing and controlling dredging operations for a removal operation. The 250- by 250-ft cell size (Figure 17) can be related to a convenient control volume, and the shallow water in the upper estuary will allow temporary placement of range markers at the corners of cells being dredged. Specific elevations can be set for the dredging prism on a cell-by-cell basis. Dredging operations for the upper contaminated layers can be completed cell by cell, using a controlled grid to ensure overlapping of cuts and complete removal of contaminated material.

Positioning

74. Accurate horizontal positioning during dredging operations (and capping operations, if the CAD disposal alternative is selected) will be critical to the cleanup. The relatively narrow geometry of the upper estuary should allow use of shore-based, line-of-sight equipment to achieve horizontal positioning with acceptable accuracy. Horizontal positions should be accurate to within 1.0 ft.

75. Surveys of the upper estuary have been completed by the NED, and additional surveys are planned. Bathymetry should be determined to an accuracy of 0.1 ft. Vertical position of the dredgehead (digging depth) will necessarily be determined using accurate surveys, tide gage data, and the equipment-specific indicators of ladder position, etc. The water surface elevation, varying with the tidal fluctuation, must be accounted for as a function of time during the dredging operation for each cell. Tide gage readings should be taken at appropriate time intervals and considered in adjusting the digging depth.

Dredging prism

76. Passes. A conceptual dredging cross section for a single grid cell is shown as Figure 18. For cleanup dredging of the surficial contaminated layer, two dredging passes are anticipated for complete removal of the contaminated material. Assuming use of small hydraulic dredges, each pass should be designed to remove approximately 1 ft of material. Since the estuary channel

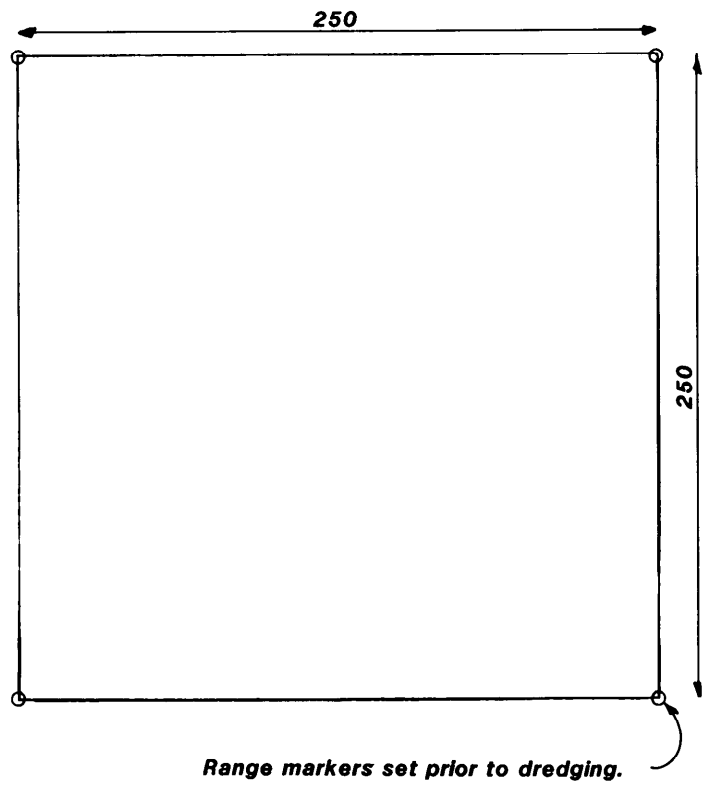

Figure 17. Schematic of grid cell

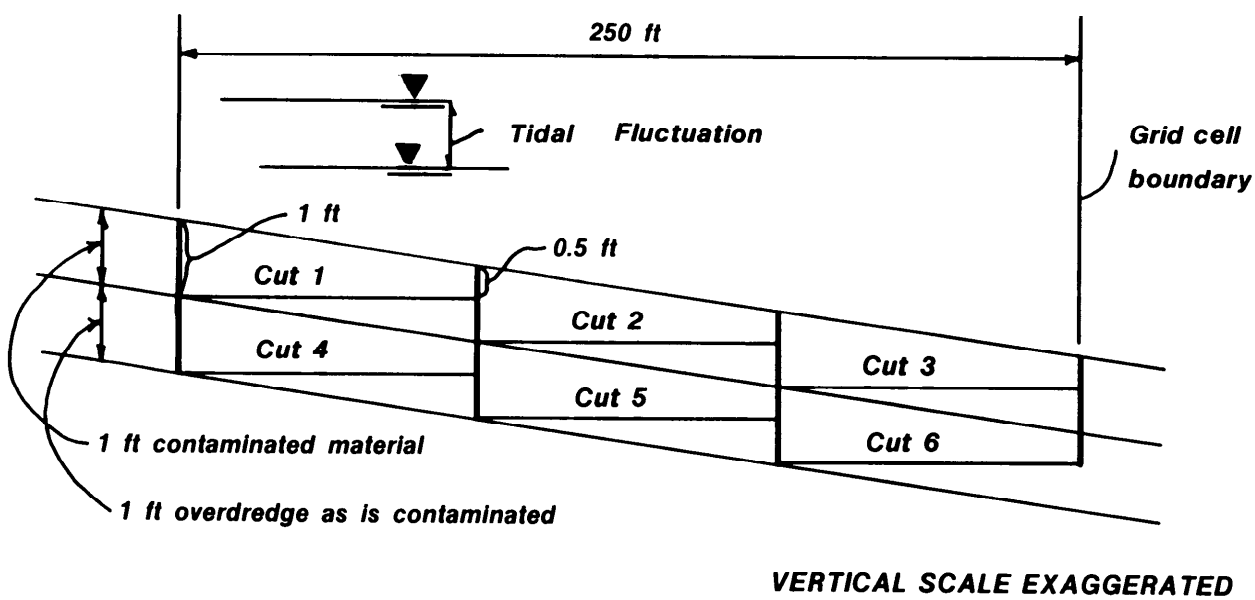

Figure 18. Conceptual dredging cross section for contaminated material removed from a single grid cell

and currents generally run north-south, the direction of advancement of the dredge for each pass should also run north-south. This will avoid advancing crosscurrent and will allow removal of resuspended material that has settled immediately downcurrent of the operation. A minimum 1 ft overlapping of cuts should also be required.

77. Bottom elevation of cuts. The bottom elevation(s) for each pass for each grid cell should be set according to the final bathymetric surveys of the site, specifically by examining cross sections along the north and south boundaries for each cell. Bathymetry within most cells will be uniform to the degree that one bottom elevation could be specified for each pass comprising the prism at a given cell.

78. For those cells requiring multiple cuts with different bottom elevations due to varying bathymetry, the adjustments for tidal fluctuation can be made at the predetermined boundaries of the cuts. The horizontal boundaries for individual cuts within a cell with varying bathymetry should be determined by locating the point at which 0.5 ft of contaminated material would be removed by the first pass. In this way, the first pass would remove between 0.5 and 1 ft of surficial material.

79. Slope. The side slope for the prism will be determined by slope stability analyses. Box cuts each with an approximate 1-ft bank will conform to the slope as shown in Figure 19. Sloughing of the banks to conform to the stable slope is anticipated.

80. Cell boundaries. To ensure complete removal of contaminated material, the upper surficial layers must be dredged to the grid cell boundaries. Any material sloughing into the cut at the grid cell boundary following the first dredging pass should be removed by the second dredging pass, as shown in Figure 19. Therefore, no additional overlapping at the cell boundaries should be necessary.

Anticipated production

81. The 250- by 250-ft cells each require up to 2,315 cu yd of in situ material to be removed in a 1-ft dredging pass. Assuming a production rate of about 100 cu yd per hour for an 8-in. dredge, the dredging time for one pass over one cell will be on the order of 24 hr. Assuming 8 hr of productive dredging time or 800 cu yd per day, 3 working days per pass per cell (or 6 working days) would be required to remove the 2-ft-thick contaminated layer in one cell.

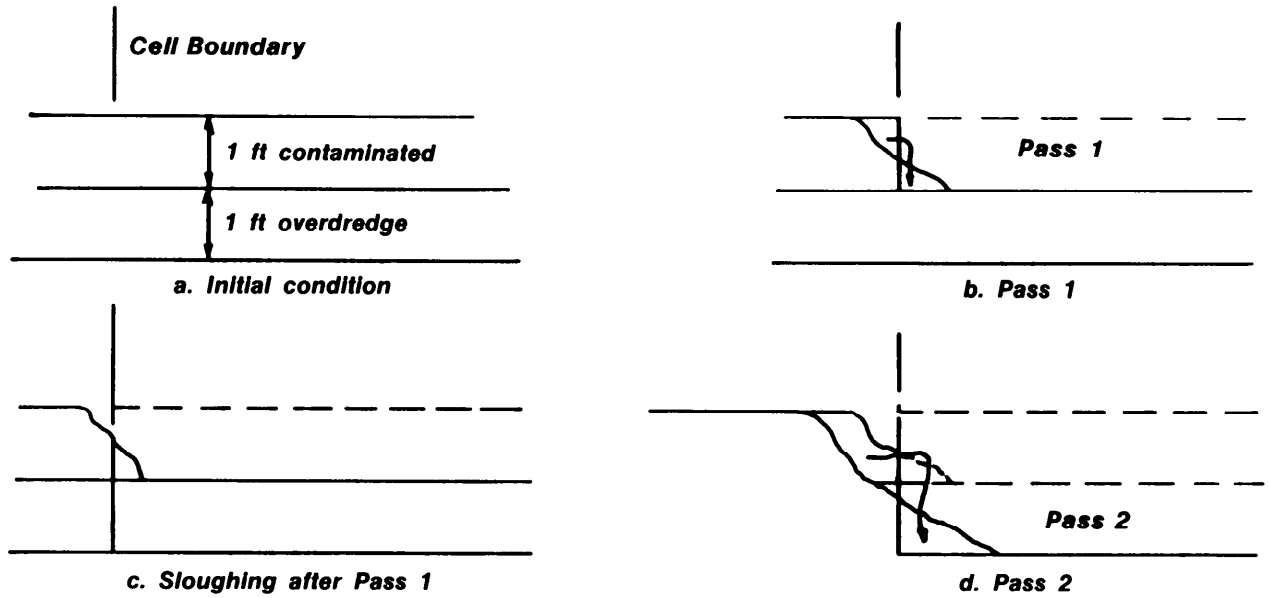

Figure 19. Bank sloughing after dredging passes at cell boundaries

This would require several periodic adjustments of digging depth to compensate for the tidal fluctuation.

82. The total area in the upper estuary to be dredged in the cleanup comprises approximately 187 acres, or the equivalent of approximately 119 full cells. If one dredge is used, the total time required for the cleanup would be approximately 700 working days of 8 hr each. The total time required will be considerably longer due to icing conditions in the winter and similar factors. Use of two dredges may prove beneficial because working days required for cleanup would be cut in half. Also, in the event of a major breakdown, the remaining dredge could continue cleanup operations (or capping operations if the CAD alternative were selected). The advantages of a second dredge must be balanced against the effects of a higher combined flow rate on the design of the disposal options.

Material transport

83. The dredged material will be a sediment-water slurry transported by pipeline. This pipeline should be constructed of material with joints that do not leak. If steel discharge pipe is used, it should be in good condition and have flanged joints with leakproof gaskets such that it will not fail during the dredging operation. If a material such as polyethylene is used, it can be heat-fused to form a long, flexible line of flange-free pipe. Polyethylene

also is an inert material, which might be preferred when handling contaminated sediment. Movement of floating pipeline would resuspend less sediment than a pipeline that is submerged and in contact with the bottom. However, if the pipe is aground at low tide, sediment might be resuspended as the pipe is refloated during rising water.

Sequence of cleanup

84. The specific sequence of the cleanup (the sequence of cells) will necessarily depend on the disposal alternative selected. In general, the more contaminated material from the northernmost area of the upper estuary would be dredged first. This would place the most contaminated material in the lower layers of the disposal area for a CDF alternative, or within the smaller CDF necessary for the CAD alternative. One possible exception to this concept would involve use of dredged material to construct a liner by use of stabilization technology. In this case, material of relatively low contamination would be dredged first and placed in a thin layer in the CDF for stabilization. The more contaminated material would then be placed in the lower layers within the CDF, but immediately above the liner.

Operational controls for resuspension

85. Most of the operational controls possible for reducing resuspension by hydraulic dredges have been incorporated in selecting the equipment and defining the operational procedures for cleanup. These can be summarized as follows:

a. By setting the thickness of the cut for one pass at 0.5 to 1 ft, excessive or very shallow cuts for an 8-in. dredge have been avoided. Excessive or shallow cuts tend to result in higher sediment resuspension.

b. If a Mudcat dredge is used, no windrows will be left between cuts because of the stepping technique of the dredge. For the cutterhead and matchbox dredges, windrows can be avoided by modifying the stepping technique or by using a spud carriage, if available. Windrows result in incomplete dredging of some areas and sloughing of the partially disturbed material into the cut.

c. By using an 8-in. dredge and setting cuts of 1 ft, small box cuts will be used to step the cut to conform to the stable slope within each cell. Excessive box cuts would result in a higher degree of sloughing and resuspension.

d. For the cutterhead dredge, the cutter rotation and swing speed should be varied to determine the best performance with respect to resuspension. Swing speed should be similarly determined for the matchbox dredge. Rate of advancement and auger

rotation speed should be similarly determined for the Mudcat. The pilot study will provide the opportunity to evaluate these parameters.

Submerged diffuser

86. A submerged diffuser is under consideration for controlled placement of material in either the CDF or CAD sites to reduce turbulence and resuspension. The use of a submerged diffuser is covered in detail elsewhere. The diffuser should be evaluated for both the CDF and CAD options during the pilot study for application in the total cleanup. The diffuser was designed during the DMRP (Neal, Henry, and Greene 1978) and has been used successfully for contaminated material placement in a CAD site in Rotterdam Harbor (d'Angremond, de Jong, and De Waard 1984). An alternate design has been demonstrated at Calumet Harbor, Illinois (Hayes, McLellan, and Truitt 1988).

Controls for Sediment Resuspension

87. Careful planning, dredging techniques, and monitoring practices will result in a dredging project with a minimum amount of sediment resuspension. The small amount of material that may be introduced into the system can be contained in the dredging area and prevented from being transported downstream into the outer harbor. Devices such as silt curtains, bubble barriers, and dikes have been employed in similar applications with varying degrees of success.

Silt curtains

88. Silt curtains are turbidity barriers that physically control fine-grained materials in the water column that are generated by activities such as land runoff and dredging. These curtains are usually impervious, floating barriers that extend vertically from the water surface to a specified water depth, generally 1 ft above the bottom at low water. The primary purpose of the silt curtain is to reduce turbidity in the water column outside the curtain, not to retain the fluid mud or the bulk of the suspended solids (JBF Scientific Corporation 1978). The presence of silt curtains results in a change of flow patterns in the vicinity so that exiting flows are redirected and leave under the curtain. Silt curtains are not recommended for use in current velocities greater than 1 knot, in areas with high winds and large

breaking waves, or in situations where frequent curtain movement would be necessary.

89. The flexible, nylon-reinforced polyvinyl chloride fabric forming the silt curtain barrier is maintained in a vertical position by flotation segments at the top and a ballast chain along the bottom. A tension cable is often built into the curtain near the top to absorb stress imposed by currents and other hydrodynamic forces (Figure 20). The curtains are usually manufactured in 100-ft-long sections joined to form a barrier of the desired length. Anchor lines hold the curtain in a deployed configuration, which is usually U-shaped or circular.

90. Typical configurations are closed, open, and maze (Figure 21). The closed configuration is closed either by being attached to the shore on both ends (Figure 21c) or by being in the form of a circle or ellipse (Figure 21d). The curtains are held stationary with large anchors attached to mooring floats on the ends and smaller anchors at regular intervals along the length of the curtain. The curtain configuration will be affected by tidal change and must be monitored to maintain containment efficiency. The open configuration is used in rivers with no current reversals (Figure 21b). The distance between the anchored ends should be great enough to prevent leakage of turbid water

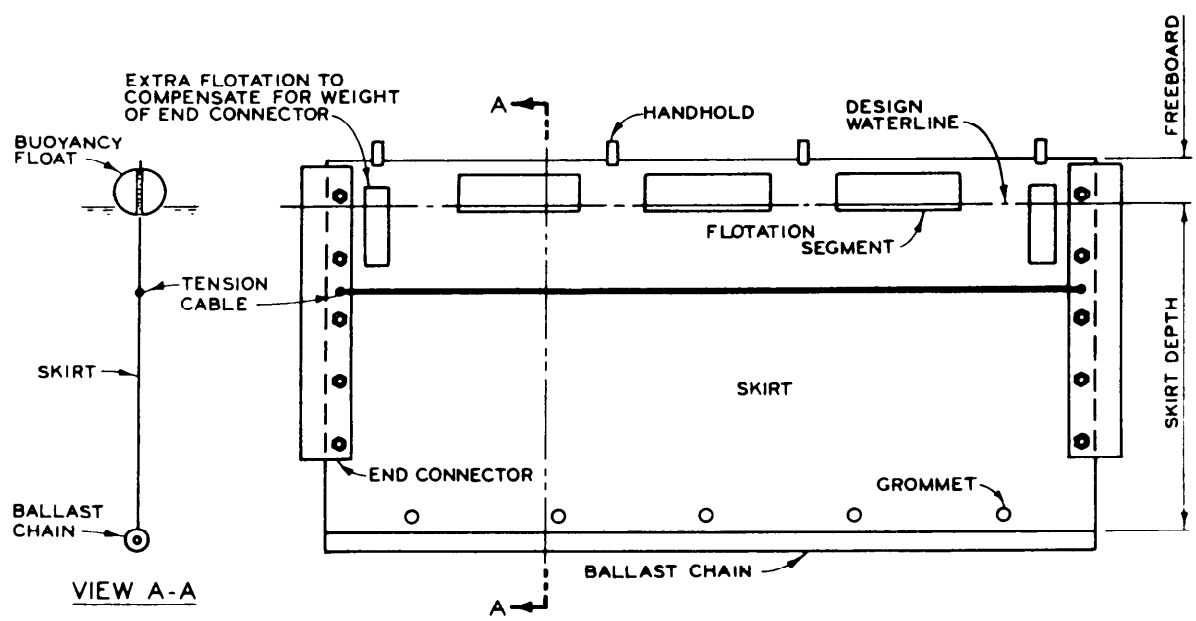

Figure 20. Construction of a typical center-tension silt curtain section

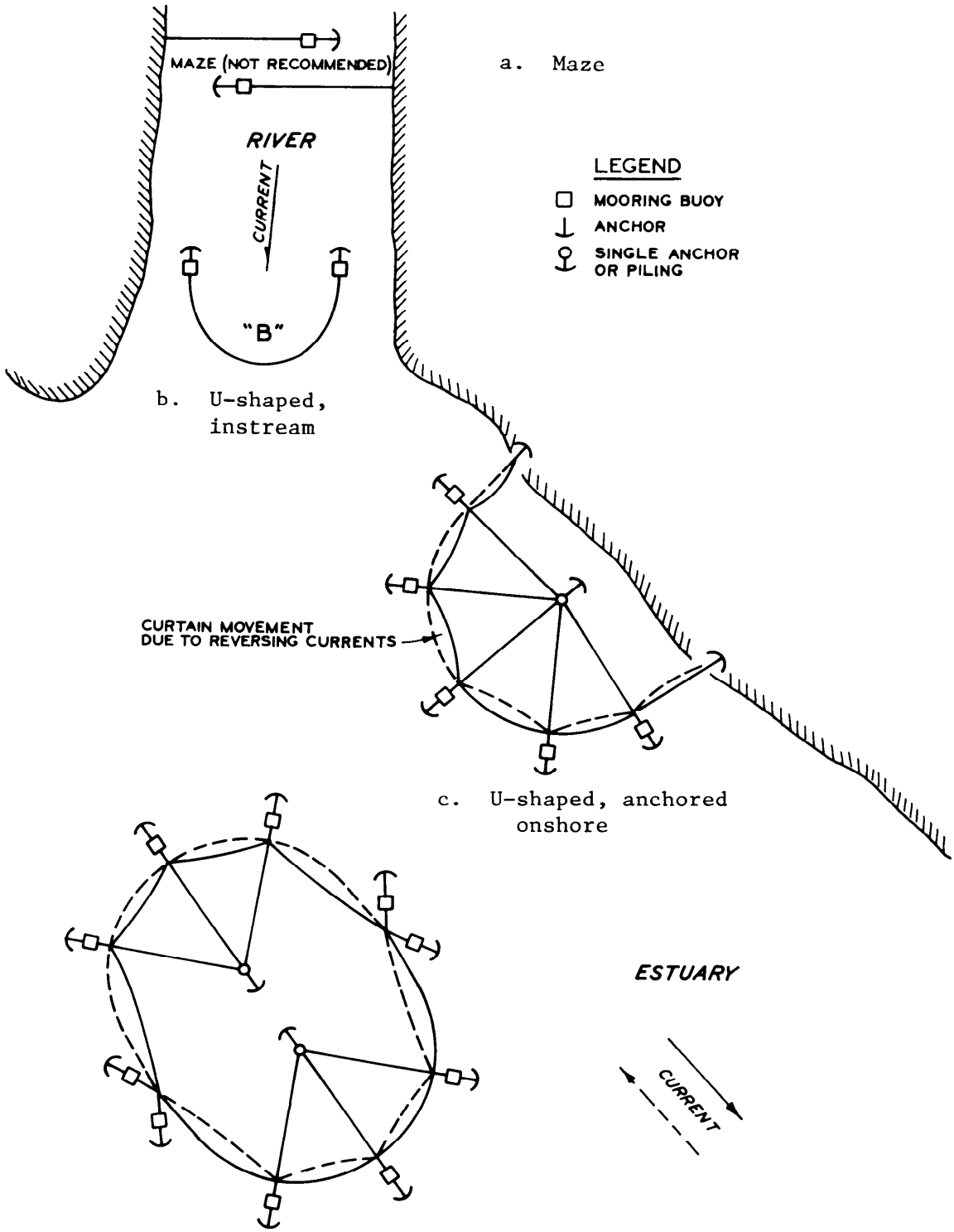

Figure 21. Typical silt curtain deployment configurations

around the ends of the U-shaped curtain. The maze configuration (Figure 21a) is used in rivers and areas where boat traffic is present. This configuration appears to be ineffective due to the direct flow through the gap between the separated curtains.

91. In an area of high sediment disturbance, care must be taken to allow the mud flow to pass under the curtain. If the curtain touches the bottom, silt can accumulate, and eventually the silt buildup will pull the curtain underwater and bury it in the sediment on the bottom. In tidal areas, the controlling depth of the curtain is the water depth at low tide.

92. Normally extending from the water surface to just above the bottom, silt curtains can be bottom anchored and extend to just below the water surface, trapping turbid water at the bottom and allowing water to escape along the surface. It is possible to develop a maze or baffle arrangement of silt curtains to reduce current velocity to the point where most of the fine material will flocculate and settle out of suspension.

93. Equipment needed to properly deploy a silt curtain includes a crane or lifting device to unload the curtain sections from the shore onto a boat or barge, and a boat or barge to transport the curtain sections into position. The curtain sections should be furled during transport and unfurled after deployment when anchored in place. Deployment can also be accomplished by towing the furled curtain at a slow speed. Care should always be exercised when towing the curtains to ensure that they remain furled and not drag on the bottom or snag other equipment.

94. Silt curtain performance has improved by the use of better and stronger material, improved anchoring and flotation systems, and reliable methods of joining curtain sections. Failures have been attributed to improper monitoring that allowed silt buildup to bury the curtain, inadequate float material that caused the curtain top to sink and allow turbid water to escape, and severe storms that dislodged anchors, resulting in damage and failure.

95. The effectiveness of a silt curtain, defined as the degree of turbidity reduction outside the curtain relative to the turbidity levels inside the curtain, depends on the nature of the operation, the characteristics of the suspended material, the type and condition of the silt curtain and method for deployment, the configuration of the enclosure, and the hydrodynamic regime at the site. Under quiescent conditions, turbidity levels outside a

properly deployed and maintained silt curtain can be reduced by 80 to 90 percent of the levels inside. It is generally agreed that, in areas with currents less than 0.5 knot and with no strong tidal action, turbidity containment can be achieved (Johansen 1976).

Silt screens

96. As an alternative to impermeable silt curtains, geotextile fabrics are sometimes used to contain suspended solids. These synthetic fabrics allow water flow through the openings in the screen material. The size of the openings determines the particle size of suspended solids that can be contained by the silt screen. Typical screen sizes are 70 to 100 mesh (US Standard Sieve). The advantage of this design is that the curtain can extend the entire depth of the water column with a float on top and an anchor at the bottom of the skirt. As the tide rises and falls, the material is alternately folded and extended, but the barrier maintains its effectiveness for the entire water depth without gaps or windows to let water in and out, as are required for silt curtains.

Oil booms

97. While silt curtains control the turbidity throughout the water column, oil booms remove or contain the thin layer of floating oil or contaminant that is found on the water surface. If an oil film is released during the New Bedford dredging, it may be necessary to deploy oil booms.

Pneumatic barriers

98. It is possible to use pneumatic bubble screens to create a barrier to floating or suspended material (Boyd et al. 1972). Bubbling devices have been used as salinity barriers and as a means of containing surface oil film in high-traffic areas where conventional oil booms would hinder normal ship movement. They have also been used around water treatment plant intakes to prevent oil pollution and to reduce loadings on the intake screens by deflecting subsurface leaves and debris (The Dock and Harbor Authority 1986). No readily available information exists on the use of bubble barriers to control turbidity. It seems unlikely that the turbulence caused by the bubbles would do anything to reduce turbidity. Power requirements for effective pneumatic barriers are very high, and investigators have found the techniques to be somewhat impractical (Herbich and Brahme, in preparation).

Hot-spot enclosure

99. Total isolation or enclosure of some localized hot spots might be desirable to prevent contaminated sediment from migrating away from the dredging site to less contaminated or clean areas. Enclosure of a dredging site can be accomplished temporarily or permanently with dikes or a cofferdam structure. The enclosure should be of a size that will enable a dredge working inside the containment to reach all the bottom sediments and have room to maneuver. If hydraulic dredging is performed, outside water will have to be supplied to replace the water removed through the dredge with the slurry mixture. Enclosures too small to accommodate the dredge might be difficult to dredge unless some specialized equipment is fabricated that can reach all locations inside the enclosure while the main pump and equipment are located outside the enclosure.

Control at Coggeshall Bridge

100. It may be possible to close the upper portion of New Bedford Harbor to the tidal waters of the lower harbor by constructing a dike or similar structure across the opening at the Coggeshall Bridge. With the upper harbor isolated, sediment removal can take two forms (Peterson 1983, Seagren 1985):

a. The area can be drained of all free water, and all incoming water can be routed directly to the lower harbor. Once the silt is dry and strong enough to support equipment, the sediment can be removed with mechanical earth-moving equipment such as dozers with low ground pressure traction, wheeled or tracked front-end loaders, or draglines. Sediment could be transported to a disposal area by dumptrucks. When using this dry mechanical method of sediment removal, care must be exercised that the drained harbor bottom is able to support the sediment removal equipment. Knowledge of underground springs or water sources is essential if the harbor bottom is to be successfully drained. Knowledge of weather patterns is important so that equipment can be removed during periods of heavy rain.

b. With the area isolated from tidal fluctuations, incoming water can be routed to the lower harbor or an equal amount of water can be released from the enclosure to produce a stable, elevated pool. Mechanical or hydraulic dredging can be undertaken with special equipment or carefully controlled conventional dredges with some goal of production yardage. If the pool is maintained at a high enough level, the sediment resuspension from barge groundings would be eliminated and prop wash effects could be reduced. Suspended sediment would remain in the upper harbor and settle quickly if the stable, elevated pool has very low internal velocities.

101. Any structure placed across the Coggeshall Bridge entrance to the upper harbor must be planned with an awareness of the forces that would occur on both sides of the structure. A fluctuating tidal head on the lower side with a stable, elevated or lowered head on the inside could present problems during tidal extremes or storm events. A stable pool can be maintained only if incoming water is eliminated or compensated for by an equal volume of released water. Control structures should be planned for worst-case flow situations, such as severe storms and extreme tides. Stilling basins inside the enclosure might be needed around any outlet valve to reduce the levels of suspended sediment reaching the outlet. The impacts on drainage, flood control, wetlands, and other environmental features as a result of placing a structure at the bridge must be weighed against the advantages of this option.

Control using hurricane barrier

102. The New Bedford hurricane barrier can be incorporated into emergency or contingency plans. With the barrier closed, water exchange between the harbor and Buzzards Bay can be minimized, and quiescent, stable water conditions can be established in the harbor.

Recommended controls

103. Controls for resuspended sediment have been selected for the pilot study. These include the use of silt curtains, in addition to operational controls for the dredge to minimize sediment resuspension. For the pilot, the timing of dredging activities will coincide with periods of slack tide. Contingency measures have also been selected for the pilot if the magnitude of sediment resuspension and release exceeds acceptable levels. These include, in proposed order of implementation, deployment of silt curtains at Coggeshall Bridge, closure of the hurricane barrier to reduce flow velocities, and, if required, cessation of activities.

104. The final selection of controls for resuspended sediment for the prototype cleanup will necessarily depend on the pilot study experience. However, at this time, use of silt curtains and oil booms is anticipated for the prototype. Additional control at the bridge and closure of the hurricane barrier are considered viable contingencies.

REFERENCES

Barnard, William D. 1978. "Prediction and Control of Dredged Material Dispersion Around Dredging and Open-Water Pipeline Disposal Operations," Technical Report DS-78-13, US Army Engineer Waterways Experiment Station, Vicksburg, MS.

Boyd, M. B., et al. 1972. "Disposal of Dredged Spoil," Technical Report H-72-8, US Army Engineer Waterways Experiment Station, Vicksburg, MS, p 121.

Condike, Brian J. 1986. "New Bedford Superfund Site, Acushnet River Estuary Study," US Army Engineer Division, New England, Materials and Water Quality Laboratory, Hubbardston, MA.

d'Angremond, K., de Jong, A., and de Waard, C. 1984. "Dredging of Polluted Sediment in the First Petroleum Harbor, Rotterdam," Proceedings of the Third United States-The Netherlands Meeting on Dredging and Related Technology, US Army Engineer Water Resources Support Center, Fort Belvoir, VA.

Fulk, R., Gruber, D., and Wullschleger, R. 1975. "Laboratory Study of the Release of Pesticides and PCB Materials to the Water Column During Dredging Operations," Contract Report D-75-6, US Army Engineer Waterways Experiment Station, Vicksburg, MS.

Hayes, D. F. 1986. "Guide to Selecting a Dredge for Minimizing Resuspension of Sediment," Environmental Effects of Dredging Technical Note EEDP-09-1, US Army Engineer Waterways Experiment Station, Vicksburg, MS.

Hayes, D. F., McLellan, T. N., and Truitt, C. L. 1988. "Demonstrations of Innovative and Conventional Dredging Equipment at Calumet Harbor, Illinois," Miscellaneous Paper EL-88-1, US Army Engineer Waterways Experiment Station, Vicksburg, MS.

Herbich, J. B., and Brahme, S. B. "A Literature Review and Technical Evaluation of Sediment Resuspension During Dredging," Technical Report (in preparation), US Army Engineer Waterways Experiment Station, Vicksburg, MS.

JBF Scientific Corporation. 1978. "An Analysis of the Functional Capabilities and Performance of Silt Curtains," Technical Report D-78-39, US Army Engineer Waterways Experiment Station, Vicksburg, MS.

Johansen, Edward E. 1976. "Silt Curtains for Dredging Turbidity Control," Proceedings of the Specialty Conference on Dredging and Its Environmental Effects, Mobile, AL, January 26-28, 1976.

Kaneko, A., Watari, Y., and Aritomi, N. 1984. "The Specialized Dredges Designed for the Bottom Sediment Dredging," Management of Bottom Sediments Containing Toxic Substances, Proceedings of the 8th US/Japan Experts Meeting, US Army Engineer Water Resources Support Center, Fort Belvoir, VA.

Koba, Hiromi, and Shiba, Toyoabi. 1982. "Sediment Resuspension in the Vicinity of the Cutterhead," Management of Bottom Sediments Containing Toxic Substances, Proceedings of the 8th US/Japan Experts Meeting, US Army Engineer Water Resources Support Center, Fort Belvoir, VA, pp 434-441.

Koba, H., Shinohara, K., and Sato, E. 1975. "Management Techniques of Bottom Sediments Containing Toxic Substances," Proceedings of the 1st US/Japan Experts Meeting on the Management of Bottom Sediments Containing Toxic Substances, US Environmental Protection Agency, Corvallis, OR.

Neal, R. W., Henry, G., and Greene, S. H. 1978. "Evaluation of the Submerged Discharge of Dredged Material Slurry During Pipeline Dredge Operations," Technical Report D-78-44, US Army Engineer Waterways Experiment Station, Vicksburg, MS.

NUS Corporation. 1984. "Draft Feasibility Study of Remedial Action Alternatives, Acushnet River Estuary Above Coggeshall Street Bridge, New Bedford Site, Bristol County, Massachusetts," Pittsburgh, PA.

Otis, M. J., and Andreliunas, V. L. 1987. "Pilot Study of Dredging and Dredged Material Disposal Alternatives, Superfund Site, New Bedford Harbor, Massachusetts," US Army Engineer Division, New England, Waltham, MA.

Peterson, Spencer A. 1983. "Management of Lakes Through Sediment Removal," Proceedings of the 16th Annual Texas A&M Dredging Seminar, 3-4 November 1983, TAMU-SG-85-105, Texas A&M University, College Station, TX.

Phillips, Keith, and Malek, John. 1984. "Dredging as a Remedial Method for a Superfund Site; Vol 2, Dredging and Dredged Material Disposal," Proceedings of the Conference Dredging '84, American Society of Civil Engineers, Philadelphia, PA.

Raymond, G. L. 1984. "Techniques to Reduce the Sediment Resuspension Caused by Dredging," Miscellaneous Paper HL-84-3, US Army Engineer Waterways Experiment Station, Vicksburg, MS.

Richardson, Thomas W., and McNair, Ernest C., Jr. 1981. "A Guide to the Planning and Hydraulic Design of Jet Pump Remedial Sand Bypassing Systems," Instruction Report HL-81-1, US Army Engineer Waterways Experiment Station, Vicksburg, MS.

Richardson, Thomas W., et al. 1982. "Pumping Performance and Turbidity Generation of Model 600-100 Pneuma Pump," Technical Report HL-82-8, US Army Engineer Waterways Experiment Station, Vicksburg, MS, pp 7-8.

Sato, E. 1976. "Application of Dredging Techniques for Environmental Problems," Proceedings of WODCON VII: Dredging, Environmental Effect and Technology, World Dredging Association, pp 143-162.

Seagren, Eric H. 1985. "Lake Sediment Removal - Available Dredging Techniques and Equipment," presented at the Management of Small Lakes Symposium VII and Volunteer Lake Monitoring Program Conference, 27 April 1985, William Rainey Harper College, Palatine, IL.

The Dock and Harbor Authority. 1986 (Jun). "OPD Barrier Finds New Uses," Vol 67, No. 780, Foxlow Publications Ltd., London, p 47.