DACW-33-85-D-0011 Delivery Order 0014
Hop Brook Dam, Nagatuck, CT

FILE COPY

ATLANTIC TESTING LABORATORIES, LIMITED
Sustaining Member—N.Y.S. Society of Professional Engineers

Box 29
Canton, N.Y. 13617
(315) 386-4578

Box 356
Cicero, N.Y. 13039
(315) 699-5281

October 31, 1986

U. S. Army Corps of Engineers
New England Division
424 Trapelo Road
Waltham, MA 02254-9149

Attn: Chief, Engineering Division, NEDED

Re: Piezometer Installations and Survey Program
Hop Brook Dam, Naugatuck, CT
Contract DACW-33-85-D-0011
Delivery Order No. 0014
ATL Report No. CD017-1-10-86

Gentlemen:

In accordance with Delivery Order No. 0014, dated 30 July 1986, attached is one final copy of our Engineering Report for the subsurface investigation performed at Hop Brook Dam, Naugatuck, CT.

By copy of this letter, we are also transmitting two copies of this report to the Chief of the Geotechnical Engineering Branch.

If you have any questions or comments, please do not hesitate to call.

Respectfully submitted,

Spencer F. Thew, P.E./L.S.
President

SFT/TAB/smf

encs.

2 cc: Chief, Geotechnical Engineering Branch, NEDED-GF

RECEIVED
NOV 10 1986
GEOTECHNICAL
ENGINEERING BRANCH

SECTION 1

SURVEY, INSPECTION, EXPLORATION AND PIEZOMETER INSTALLATION

HOP BROOK DAM
NAUGATUCK, CT

CONTRACT DACW 33-85-D-0011
CONTRACTING OFFICER:
Edward D. Hammond, LTC, CE
28 June 1985

DELIVERY ORDER NO. 0014
30 JULY 1986

PREPARED FOR: U. S. Army Corps of Engineers
New England Division
424 Trapelo Road
Waltham, MA 02254-9149

PREPARED BY: Theresa A. Beddoe
Atlantic Testing Laboratories, Limited
P. O. Box 29
Canton, NY 13617

October 10, 1986

ATL Report No. CD017-1-10-86

SECTION 2

TABLE OF CONTENTS

SECTION 1 Title Page

SECTION 2 Table of Contents

SECTION 3 Scope of Investigation
- a. Delivery Order
- b. Project Site
- c. Purpose
- d. Scope of Work

SECTION 4 Quality Control
- a. General Certification Statement
- b. Records Taken
- c. Equipment Used
- d. Procedures

SECTION 5 Summary of Activities and Telephone Log
- Table I Summary of Activities
- Table II Telephone Log

SECTION 6 Chain of Custody Log

SECTION 7 Safety Reports

SECTION 8 Field Inspector's Logs
- a. Figure 1 - General Project Map
- b. Figure 2 - Site Location Map
- c. Figure 3 - Boring Location Plan
- d. Boring Logs

SECTION 9 Other Records Taken
- a. Control Point Sketch
- b. Hop Brook Lake Pool Elevations

SECTION 3

SCOPE OF INVESTIGATION

a. Delivery Order No. 0014

CHECKED BOX APPLIES: [X] ORDER FOR SUPPLIES OR SERVICES

[ ] REQUEST FOR QUOTATIONS NO. — RETURN COPIES OF THIS QUOTE BY (THIS IS NOT AN ORDER. See DD Form 1155r)

PAGE 1 OF 3

5. CERTIFIED FOR NATIONAL DEFENSE UNDER DMS REG 1 — DO

1. CONTRACT/XXXX ORDER NO	2. DELIVERY ORDER NO	3. DATE OF ORDER	4. REQUISITION/PURCH REQUEST NO
DACW33-85-D-0011	0014	86 SEP 19	GEB 86-77

6. ISSUED BY: Dept. of the Army — CODE
New England Division, Corps of Engineers
424 Trapelo Road
Waltham, MA 02254-9149
Buyer/Symbol: Hersom/NEDSD-P Phne: AC 617-647-8420

7. ADMINISTERED BY (If other than 6) — CODE

8. DELIVERY FOB: [XX] DEST. [ ] OTHER (See Schedule if other)

9. CONTRACTOR/QUOTER — CODE — FACILITY CODE

NAME AND ADDRESS:
Atlantic Testing Laboratories LTD
P.O. Box 29
Canton, NY 13617

10. DELIVER TO FOB POINT BY: In accordance with Paragraph 6 of Attachment No. 1

11. CHECK IF BUSINESS IS: [XX] SMALL [ ] SMALL DISADVANTAGED [ ] WOMEN-OWNED

12. DISCOUNT TERMS: NET

13. MAIL INVOICES TO: Finance & Accounting Officer at Issuing Office

14. XXXX Service for: — CODE
U.S. Army Engineer Division, New England
ATTN: Geotechnical Engineering Branch
424 Trapelo Road
Waltham, MA 02254-9149

15. PAYMENT WILL BE MADE BY — CODE
Finance & Accounting Officer at Issuing Office

MARK ALL PACKAGES AND PAPERS WITH CONTRACT OR ORDER NUMBER

16. TYPE OF ORDER
- DELIVERY: X — This delivery order is subject to instructions contained on this side of form only and is issued XXXXXXXXXXXXXXXXXX in accordance with and subject to terms and conditions of above numbered contract.
- PURCHASE: Reference your ____ furnish the following on terms specified herein, including, for U.S. purchases, General Provisions of Purchase Order on DD Form 1155r (EXCEPT CLAUSE NO. 12 APPLIES ONLY IF THIS BOX [ ] IS CHECKED, AND NO. 14 IF THIS BOX [ ] IS CHECKED), special provisions ____ and delivery as indicated. This purchase is negotiated under authority of 10 USC 2304(a)(3) or as specified in the schedule if within the U.S., its possessions or Puerto Rico, if otherwise under 2304(a)(6)
[ ] If checked, Additional General Provisions apply. Supplier shall sign "Acceptance" on DD Form 1155r and return ____ copies

17. ACCOUNTING AND APPROPRIATION DATA/LOCAL USE
96X3123 O&M CE Civil
CC1120740000X000 (MC)
Contract

SBSA Status
AE/PS Coord.
GEB
SO
Richard J. Jones

18. Line ITEM NO	19. SCHEDULE OF SUPPLIES/SERVICES	20. QUANTITY ORDERED/ACCEPTED*	21. UNIT	22. UNIT PRICE	23. AMOUNT
	Furnish necessary services and equipment for surveying and installing seven piezometers at Hop Brook Dam, Naugatuck, Connecticut, as specified in Attachment No. 1	APPROX.			ESTIMATED

*If quantity accepted by the Government is same as quantity ordered, indicate by ✓ mark. If different, enter actual quantity accepted below: quantity ordered and encircle.

24. UNITED STATES OF AMERICA — BY: THOMAS A. RHEN, Colonel, CE, Division Engineer — CONTRACTING/ORDERING OFFICER XXXXX

25. TOTAL: ~~$70,862.50~~

29. DIFFERENCES

26. QUANTITY IN COLUMN 20 HAS BEEN: [ ] INSPECTED [ ] RECEIVED [ ] ACCEPTED, AND CONFORMS TO THE CONTRACT EXCEPT AS NOTED
DATE — SIGNATURE OF AUTHORIZED GOVERNMENT REPRESENTATIVE

27. SHIP. NO. — [ ] PARTIAL [ ] FINAL

28. D.O. VOUCHER NO.

30. INITIALS

31. PAYMENT: [ ] COMPLETE [ ] PARTIAL [ ] FINAL

32. PAID BY

33. AMOUNT VERIFIED CORRECT FOR

34. CHECK NUMBER

35. BILL OF LADING NO.

36. I certify this account is correct and proper for payment
DATE — SIGNATURE AND TITLE OF CERTIFYING OFFICER

37. RECEIVED AT — 38. RECEIVED BY — 39. DATE RECEIVED — 40. TOTAL CONTAINERS — 41. S/R ACCOUNT NUMBER — 42. S/R VOUCHER NO.

STANDARD FORM 36 JULY 1966
GENERAL SERVICES ADMINISTRATION
FPR (41 CFR) 1-16.101
RECEPTION TO BE APPROVED BY NARA

CONTINUATION SHEET

BID NO OR DOL BEING CONTD
Delivery Order No. 0014
to DACW33-85-D-0011

NAME OF OFFEROR OR CONTRACTOR
Atlantic Testing Laboratories, LTD

ITEM NO	SUPPLIES/SERVICES	QUANTITY	UNIT	UNIT PRICE	AMOUNT
		APPROX.			ESTIMATED
1.2	Geotechnical Inspector	200	hr	$ 40.00	$ 8,000.00
1.3	Per Diem - Overnight stay	20	day	45.00	900.00
1.4	Mileage from Waltham, MA & return	1250	mi	.35	437.50
2.1	Geotechnical Report	1	job	60% of Item 1.2	4,800.00
3.1	Mobilization & Demobilization	4	job	180.00	720.00
3.2	Mileage from/to Waltham, MA	1000	mi	.35	350.00
3.4	Survey crew & equipment	5	day	440.00	2,200.00
3.5	Overnight per diem for survey crew	4	day	90.00	360.00
3.6	Data Reduction & Plotting	1	job	100% of Item 3.4	2,200.00
3.7	Standby time	8	hr	55.00	440.00
6.1	Mobilization & Demobilization	1	job	700.00	700.00
6.2	Mileage from/to Waltham, MA	250	mi	1.15	287.50
6.5	Standby time/on site moves	80	hr	75.00	6,000.00
7.1	Mobilization & Demobilization	1	job	450.00	450.00
7.2	Mileage from/to Waltham, MA	250	mi	1.15	287.50
7.5	Standby time	120	hr	50.00	6,000.00
9.1	Bulldozer (150 HP) w/operator	40	hr	70.00	2,800.00
12.3	Hollow stem auger, 4" diam.	70	lf	22.00	1,540.00
14.1	0-50 ft. depth	290	lf	22.00	6,380.00
14.2	51-150 ft. depth	100	lf	40.00	4,000.00
17.1	BX, NX size	300	lf	15.00	4,500.00
18.2	HX and 6 inch size	120	lf	28.00	3,360.00
20.2	Pipe (3" ID, ½" wall)	70	lf	5.50	385.0
22.3	NWX size and/or NWM	70	lf	45.00	3,150.0
22.4	4 x 5½ size, double tube barrel	40	lf	70.00	2,800.0

STANDARD FORM 36, JULY 1966
GENERAL SERVICES ADMINISTRATION
(41 CFR) 1-16.101
EXCEPTION TO SF 36 APPROVED
BY NARS, MAR 1977

CONTINUATION SHEET

REF NO OF DOC BEING CONT'D
Delivery Order No. 0014
to DACW33-85-D-0011

NAME OF OFFEROR OR CONTRACTOR
Atlantic Testing Laboratories, LTD

ITEM NO	SUPPLIES/SERVICES	QUANTITY	UNIT	UNIT PRICE	AMOUNT
		APPROX.			ESTIMATED
24.1	Casagrande type/or equal, 0-50 ft. depth	325	lf	15.00	4,875.00
24.2	Casagrande type/or equal, over 50 ft. depth	100	lf	17.00	1,700.00
30.1	Light lumber for shoring excavation	2	mbf	620.00	1,240.00
	ESTIMATED TOTAL				$ 70,862.50

ATTACHMENT NO. 1

GEB REQUISITION 86-77 DACW33-85-D-0011

DELIVERY ORDER NO. 0014

SURVEY, INSPECTION, EXPLORATION AND PIEZOMETER

INSTALLATION INSTRUCTION

PROJECT: Piezometer Installation & Surveying Program

SITE: Hop Brook Dam, Naugatuck, CT

PURPOSE: Locate by survey and install piezometers to determine phreatic surface, pore pressures, and average permeabilities of the foundation. Monitor movements on the downstream depression area.

1. SCOPE OF INVESTIGATION

a. General.

Survey and install seven piezometers (as shown on attachment #2) on the crest, slope, and left abutment of the dam. All test borings shall be located by survey. The borings shall be located both horizontally and vertically. Features of the dam shall be used for horizontal control (℄ Dam Sta 4+60 = ℄ Outlet conduit Sta 4+60) and crest monuments shall be used for vertical control (elev. 380.93 monument No. 4). The survey crew shall be mobilized a total of four times for final boring location, and three monitoring surveys.

b. Test Boring for Piezometer.

(1) Test boring location for borings FD-A through FD-F (as shown on attachment No. 2) shall be located by survey crew. Boring FD-E is along the conduit and care shall be taken to avoid driving through conduit. Existing PZ-5 (installed March 86) shall be redrilled and deepened and a new piezometer installed. The order in which the work is to be accomplished will be determined in the field by the contractor.

(2) The test boring shall be advanced and sampled as indicated on attachment No. 2 and as outlined in the contract specifications. Compressed air will not be permitted.

(3) Overburden sampling shall be performed using a 300 lb. hammer driving a five foot solid sample spoon (2 1/2 inch ID). Sampling shall be continuous and the entire hole shall be sampled.

(4) Refusal is defined as 100 blows with no penetration or bouncing refusal.

(5) When refusal is encountered prior to reaching the specified overburden sampling depth, the boring shall be advanced with a large

diameter core barrel. When bedrock is encountered in borings FD-D and FD-F, five feet of bedrock shall be cored. If a break through occurs before reaching the specified overburden sampling depth, continuous sampling shall be resumed.

(6) A 6 inch O.D. core barrel will be required to penetrate the rip rap. Casing (4 inch ID) will be utilized in the upper portions of each hole. Recirculated clear mud and water mixture shall be utilized in the lower portions of the hole.

(7) A drilling platform shall be required on all embankment slope holes.

(8) Casagrande open-type piezometers or other approved type shall be installed in accordance with paragraph 24, page C-26 of the Contract and attachment 3. For the piezometer installations, a ten (10) foot piece of 3" casing or pipe shall be left in place and threaded cap provided. Two 12" long #6 rebars shall be welded to the casing to prevent future rotation. The bars shall be welded to the upper three feet of casing. In addition, the casing shall be grouted in.

(9) To accomplish this program one drill rig and crew and a drill crew without equipment (for slope holes) will be mobilized.

(10) One geotechnical inspector shall act as a field inspector while performing the borings and installing piezometers. The inspector shall provide telephone reports to Mr. L'Heureux, Corps of Engineers, at 617-647-8669 every working day or completion of each boring (prior to piezometer installation).

(11) All samples shall be delivered to the Corps of Engineers Headquarters in Waltham, MA by the field inspector. Sample delivery shall be coordinated with the Director, NED Materials and Water Quality Laboratory at 617-647-8367/8392.

c. Survey Plan and Schedule.

(1) The 20' x 40 ' depression (see attachment No. 2) along the outlet conduit shall be monitored for vertical movements by survey crew every two months for a six months period. Three measurements will be required.

(2) A grid has been installed in the area of the depression. A vertical control point (drill hole) has been established on the head wall of the outlet conduit. This control point shall be used as a bench mark for subsequent surveys.

2. SITE CONDITIONS

The site is Hop Brook Dam, a Corps of Engineers dam in Naugatuck, CT (see attachment 2). The drilling operations will be performed along the crest, mid-slope, and the abutment of the dam as indicated on attachment 2.

The site shall be returned to its pre-work condition upon completion. Also, the project manager must approve the site condition prior to demobilization.

3. RIGHTS OF ENTRY

The geotechnical inspector shall notify the Project Manager, Mr. Les Butler at the dam at 203-729-8840 prior to commencement of work.

4. COORDINATION

Mr. L'Heureux, Corps of Engineers 617-647-8669, shall be contacted five days prior to start of work and each work day to report on the progress of the work. The geotechnical inspector shall report on how work is progressing and what types of material are being encountered.

5. EXPLORATION

The drive sampling borings designated FD-A through FD-F located on attachment 2 shall be numbered FD-86-8 through FD-86-13 in order of their completion. The new numbers shall be indicated on the exploration logs and shown on a plan of explorations.

6. COMPLETION SCHEDULE.

Services under this contract shall start within seven calendar days after receipt of delivery order. Duration of field work is estimated to be 35 Calendar days. The geotechnical report shall be submitted in draft format for review by the Government no later than fourteen calendar days after completion of the drill portion of the field work. Review will take approximately ten calendar days from receipt of draft report. The final geotechnical report shall be submitted no later than seven calendar days after receipt of draft report including the action taken on possible comments.

The data from the survey portion of this delivery order shall be submitted two days after survey and included in a complete survey data report at completion of the delivery order.

7. QUALITY CONTROL

You will be held responsible for the quality of the maps submitted and for all damages caused the Government as a result of your negligence in the performance of any services furnished under the contract.

Although submissions required by your contract are technically reviewed by the Government, it is emphasized that your work must be prosecuted using proper internal controls and review procedures. The letter of transmittal for each submission which you make shall include a certification that the submission has been subjected to your own review and coordination procedures to insure (a) completeness for each discipline commensurate with the level effort required for that submission, (b) elimination of conflicts, errors and omissions, and (c) the overall professional and technical accuracy of the submission. Documents which

are significantly deficient in any of these areas will be returned to you for correction and/or upgrading prior to our completing our review. Contract submission dates will not be extended if a resubmission of draft material is required for this reason.

CORPS OF ENGINEERS

U. S. ARMY

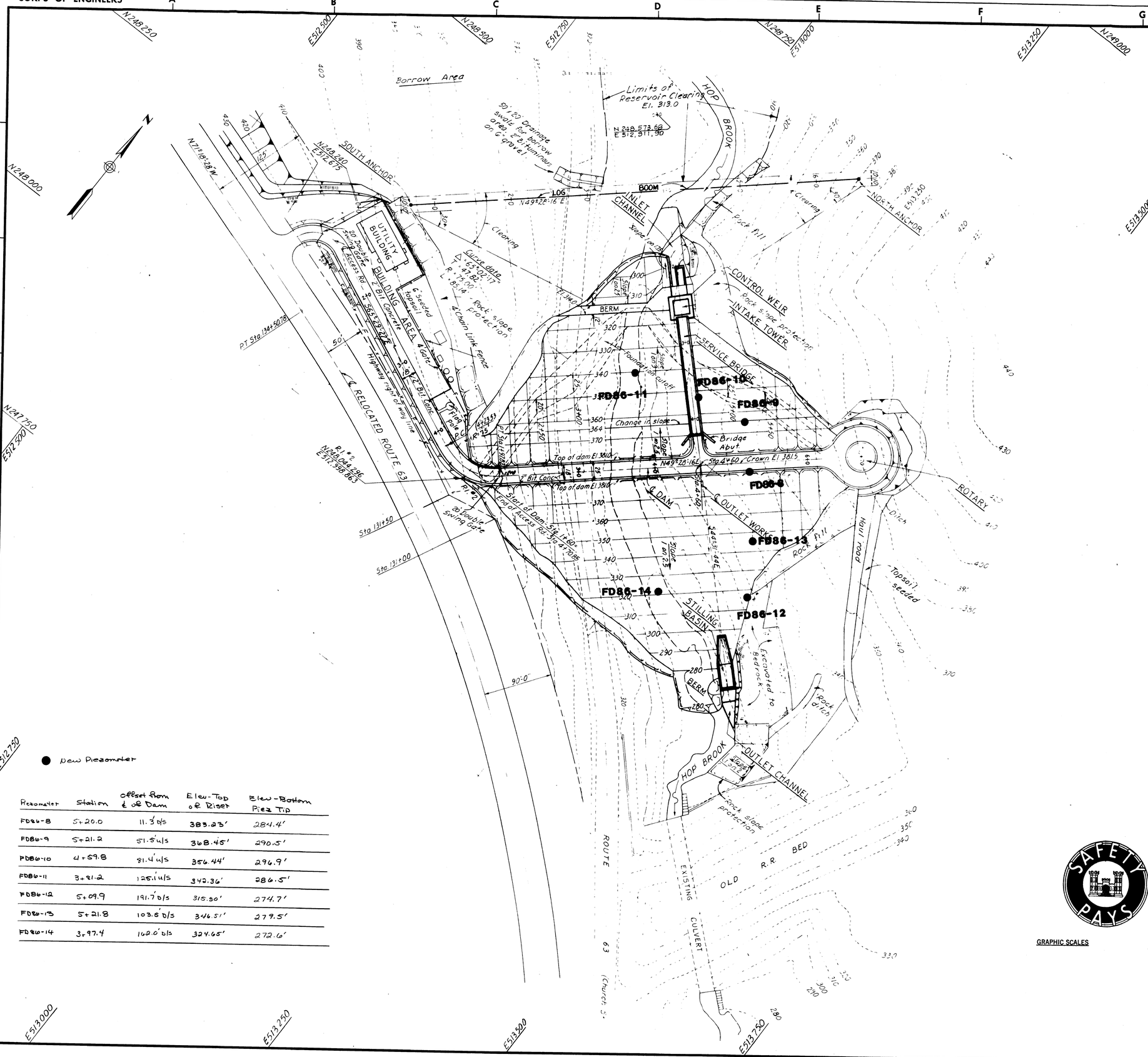

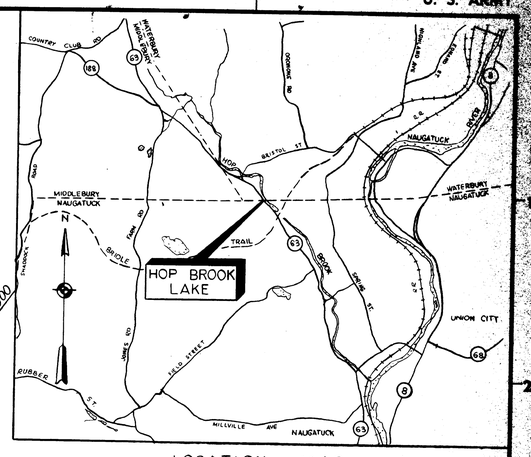

LOCATION MAP

SCALE 1"=2000' (APPROX)

● New Piezometer

Piezometer	Station	offset from ℄ of Dam	Elev-Top of Riser	Elev-Bottom Piez Tip
FD86-8	5+20.0	11.3' d/s	383.23'	284.4'
FD86-9	5+21.2	51.5' u/s	368.45'	290.5'
FD86-10	4+59.8	81.4' u/s	356.44'	296.9'
FD86-11	3+81.2	125.1' u/s	342.36'	286.5'
FD86-12	5+09.9	191.7' d/s	315.50'	274.7'
FD86-13	5+21.8	103.6' d/s	346.51'	279.5'
FD86-14	3+97.4	162.0' d/s	324.65'	272.6'

GRAPHIC SCALES

REVISION	DATE	DESCRIPTION	BY
	10/31/86	add as-built piezometer locations by Atlantic Testing Laboratories, Limited	TAB

DEPARTMENT OF THE ARMY
NEW ENGLAND DIVISION
CORPS OF ENGINEERS
WALTHAM, MASS.

DES. BY | DR. BY | CK. BY

SUBMITTED:

CHIEF, SECTION

APPROVAL RECOMMENDED:

CHIEF,

REVIEWED:

PROJECT MANAGER

APPROVAL RECOMMENDED:

CHIEF, PROJECT MNGT. BRANCH

APPROVED

CHIEF, ENGINEERING DIVISION

DATE

SCALE | SPEC. NO.

DRAWING NUMBER

SHEET

HOP BROOK

MAKEPEACE P-4759

CORPS OF ENGINEERS — U. S. ARMY

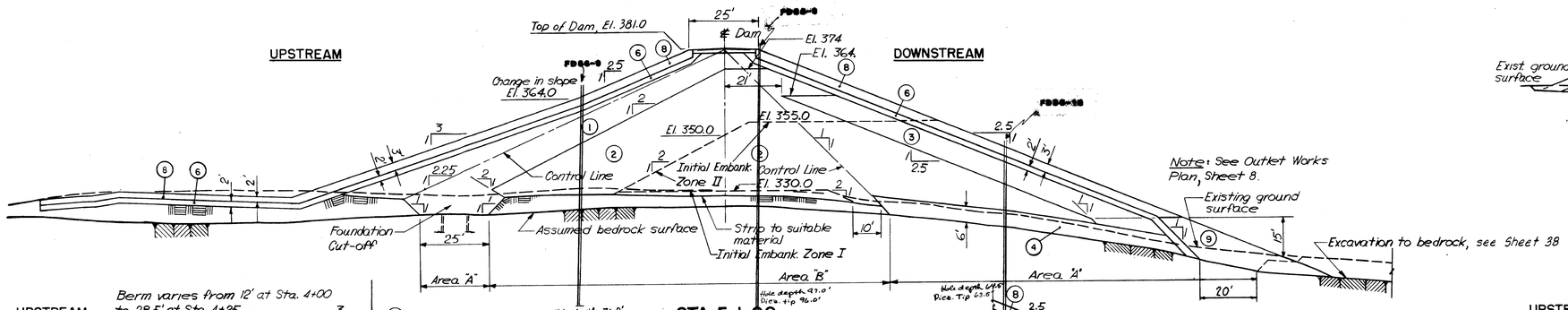

STA. 5 + 00
SCALE 1" = 20'

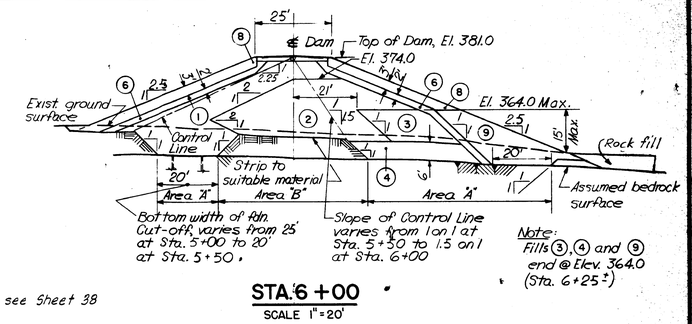

STA. 6 + 00
SCALE 1" = 20'

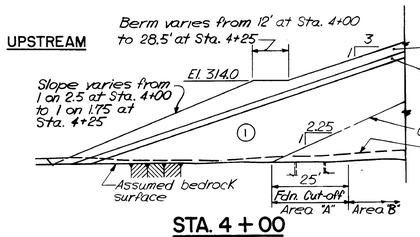

STA. 4 + 00
SCALE 1" = 20'

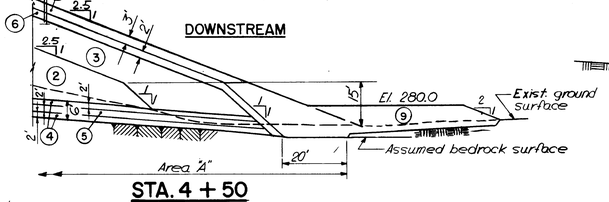

STA. 4 + 50
SCALE 1" = 20'

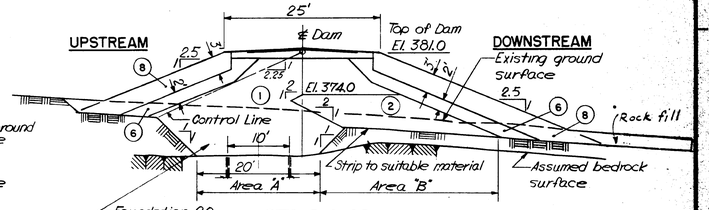

STA. 6 + 40
SCALE 1" = 10'

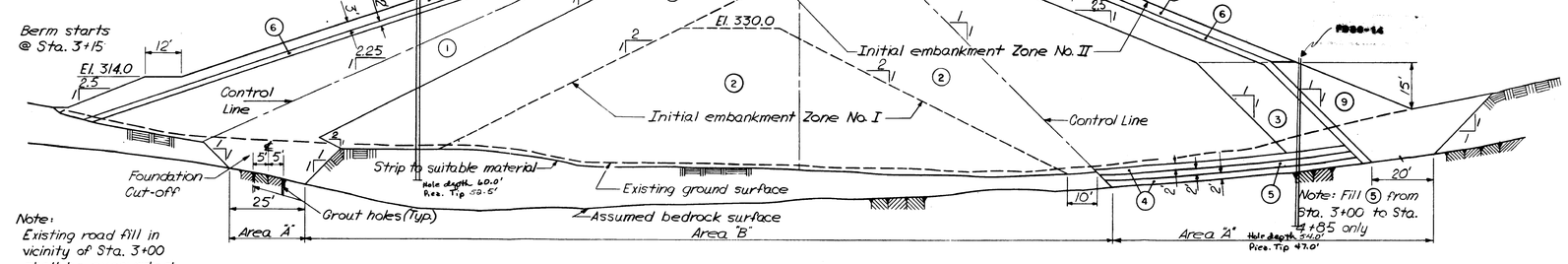

STA. 3 + 50
SCALE 1" = 20'

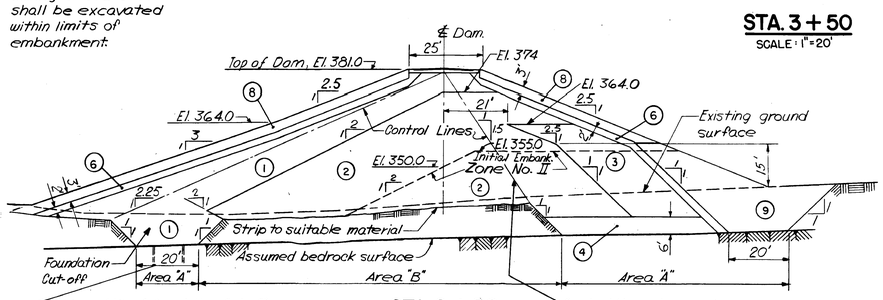

STA. 2 + 50
SCALE 1" = 20'

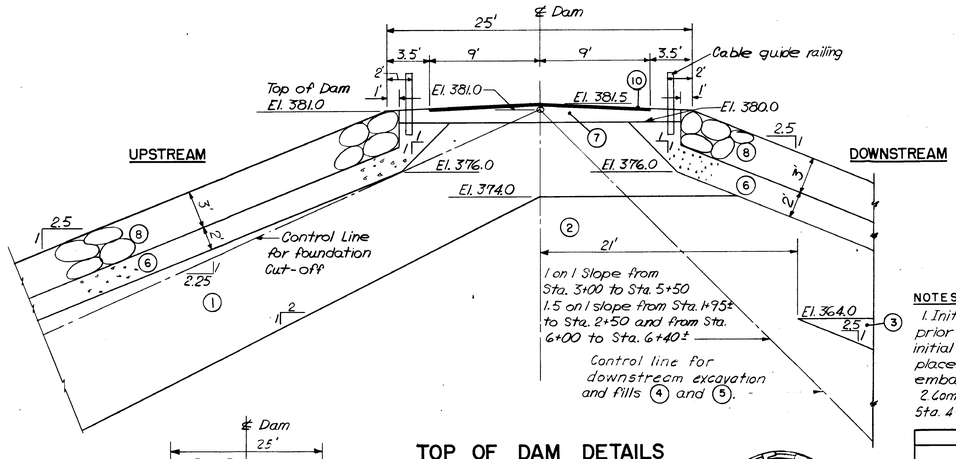

TOP OF DAM DETAILS
SCALE 1" = 5'

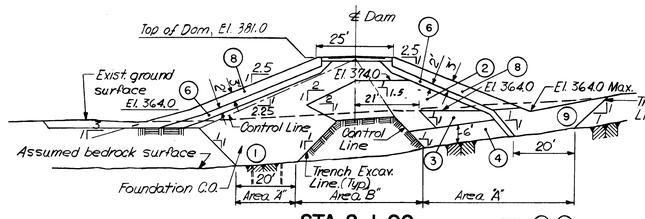

STA. 2 + 00
SCALE 1" = 20'

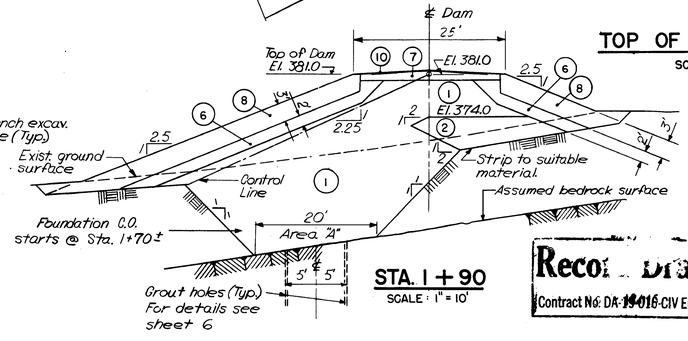

STA. 1 + 90
SCALE 1" = 10'

MATERIALS LEGEND		
DESIGNATION	TYPE	PAYMENT ITEM NO.
1	COMPACTED IMPERVIOUS FILL	11
2	COMPACTED RANDOM FILL	17
3	COMPACTED PERVIOUS FILL	14
4	COMPACTED GRAVEL FILL	15
5	COMPACTED PROCESSED SAND FILL	18
6	GRAVEL BEDDING	19
7	ROLLED GRAVEL BASE	20
8	ROCK SLOPE PROTECTION	23
9	ROCK FILL	22
10	2" BITUMINOUS CONCRETE	67

Excavation and Cleaning Embankment Foundations Area.
Area "A" Excavate to bedrock. Bedrock surface shall be hand cleaned.
Area "B" Strip. Whenever bedrock surface is exposed during stripping operations, the bedrock surface shall be hand cleaned.

NOTES:

1. Initial embankment Zone I may be constructed prior to construction or placement of adjacent fills. A portion of initial embankment Zone II may be constructed prior to the placement of adjacent fills upon the completion of initial embankment Zone I. See Specs for additional details.
2. Compacted impervious fill 1 within these limits between Sta. 4+20 and Sta. 4+95.

REVISION	DATE	DESCRIPTION	BY
	10/31/86	as built locations of piezometers added by Atlantic Testing Laboratories, Limited	TMB

U.S. ARMY ENGINEER DIVISION, NEW ENGLAND
CORPS OF ENGINEERS
WALTHAM, MASS.

DES. BY M.Z. — DR. BY L.J.S. — CK. BY J.R.
SUBMITTED: CHIEF, LAYOUT SECTION
REVIEWED: PROJECT ENGINEER
APPROVED: CHIEF, DESIGN BRANCH — APPROVED: CHIEF, ENGINEERING DIVISION

HOUSATONIC RIVER FLOOD CONTROL
HOP BROOK DAM
EMBANKMENT SECTIONS
HOP BROOK — CONNECTICUT
DATE SEPT. 1965
SCALE AS NOTED — SPEC. NO. CIV. ENG. 19-018-66-20
DRAWING NUMBER HOU - 5
SHEET 5

GRAPHIC SCALES
1" = 5' 5' 0 5' 10'
1" = 10' 10' 0 10' 20'
1" = 20' 20' 0 20' 40'

Record Drawing
Contract No. DA-19-018-CIV ENG 66-38

CORPS OF ENGINEERS

U. S. ARMY

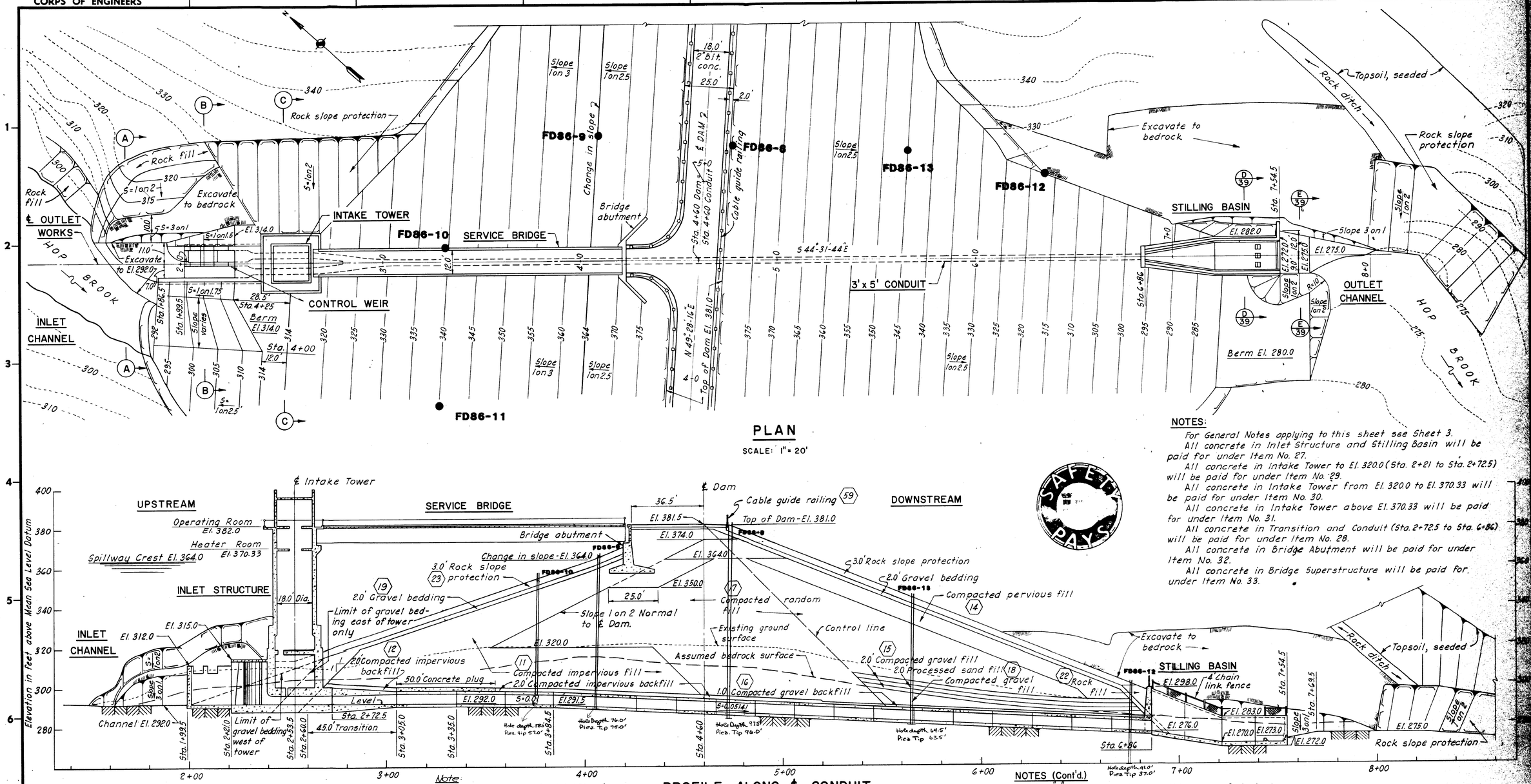

PLAN

SCALE: 1" = 20'

Note: For grout holes, see sheets 6 & 37

PROFILE ALONG ℄ CONDUIT

SCALE: 1" = 20'

NOTES:

For General Notes applying to this sheet see Sheet 3.

All concrete in Inlet Structure and Stilling Basin will be paid for under Item No. 27.

All concrete in Intake Tower to El. 320.0 (Sta. 2+21 to Sta. 2+72.5) will be paid for under Item No. 29.

All concrete in Intake Tower from El. 320.0 to El. 370.33 will be paid for under Item No. 30.

All concrete in Intake Tower above El. 370.33 will be paid for under Item No. 31.

All concrete in Transition and Conduit (Sta. 2+72.5 to Sta. 6+86) will be paid for under Item No. 28.

All concrete in Bridge Abutment will be paid for under Item No. 32.

All concrete in Bridge Superstructure will be paid for under Item No. 33.

NOTES (Cont'd.)

Line "A" indicates minimum thickness of concrete.
Line "B" indicates payment line for rock excavation and concrete.

GRAPHIC SCALES

1" = 10' 10' 0 10' 20'

1" = 20' 20' 0 20' 40'

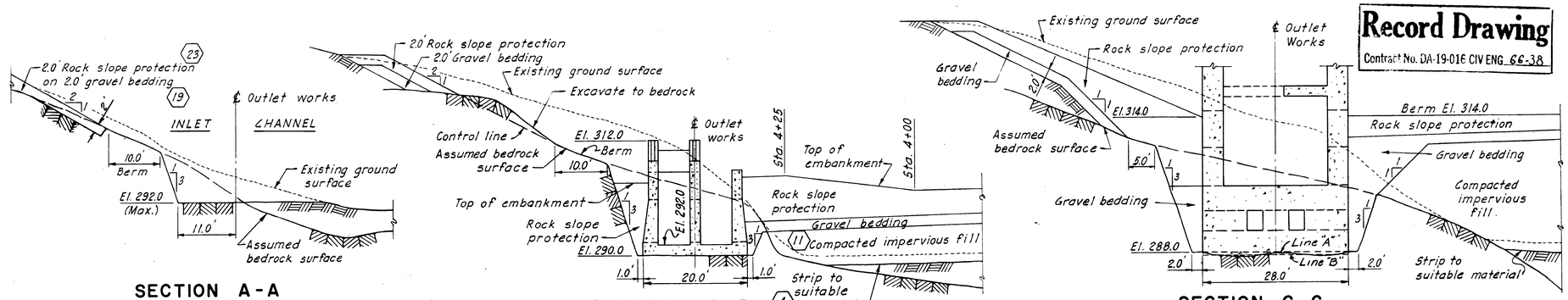

SECTION A-A

SCALE: 1" = 10'

SECTION B-B

SCALE: 1" = 10'

SECTION C-C

SCALE: 1" = 10'

Record Drawing

Contract No. DA-19-016 CIV ENG 66-38

REVISION	DATE	DESCRIPTION	BY
	10/31/86	as built locations of piezometers - added by Atlantic Testing Laboratories, Ltd.	
		Final field corrections	

U.S. ARMY ENGINEER DIVISION, NEW ENGLAND
CORPS OF ENGINEERS
WALTHAM, MASS.

DES. BY I.R. | DR. BY A.G. | CK. BY M.J.

SUBMITTED: CHIEF, LAYOUT SECTION

REVIEWED: PROJECT ENGINEER

DESIGNED: CHIEF, DESIGN BRANCH

APPROVED: CHIEF, ENGINEERING DIVISION

HOUSATONIC RIVER FLOOD CONTROL
HOP BROOK DAM
OUTLET WORKS
PLAN, PROFILE AND SECTIONS
HOP BROOK CONNECTICUT

DATE SEPT.

SCALE AS SHOWN | SPEC. NO. CIV. ENG. 16-

DRAWING NUMBER HOU-5

PLATE

CORPS OF ENGINEERS — U. S. ARMY

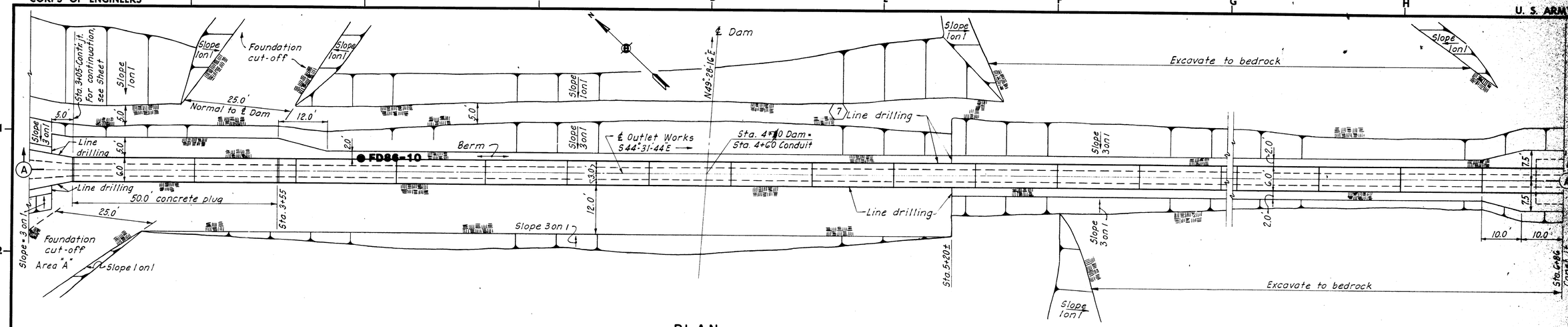

PLAN

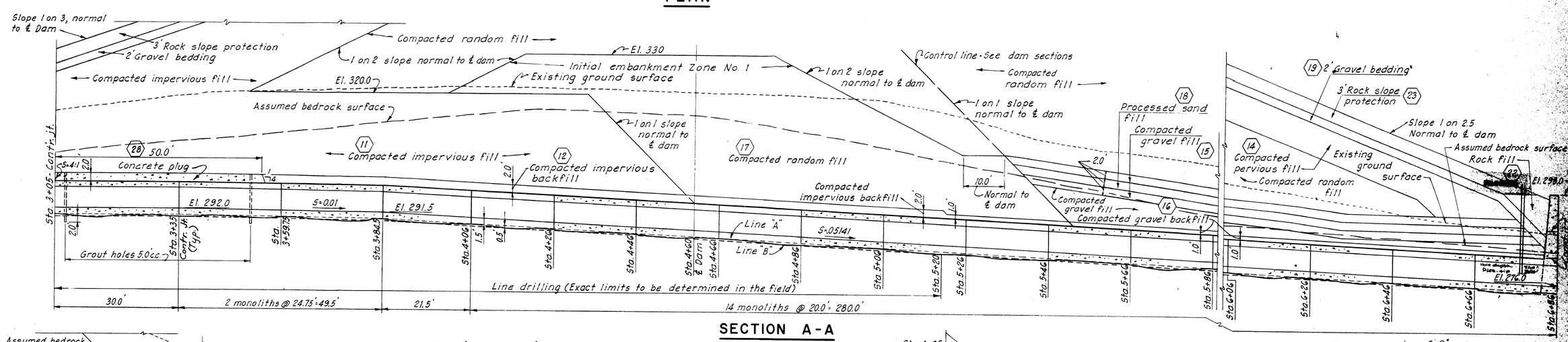

SECTION A-A

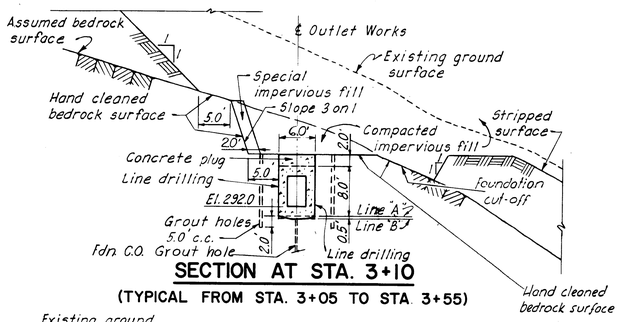

SECTION AT STA. 3+10

(TYPICAL FROM STA. 3+05 TO STA. 3+55)

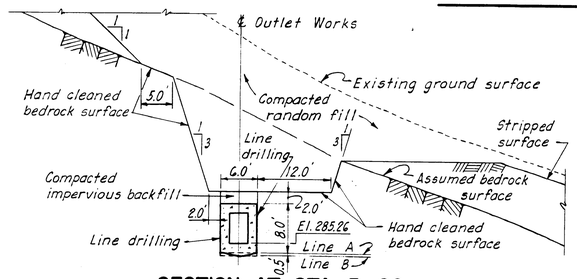

SECTION AT STA. 5+06

(TYPICAL FROM STA. 4+60± TO STA. 5+20±)

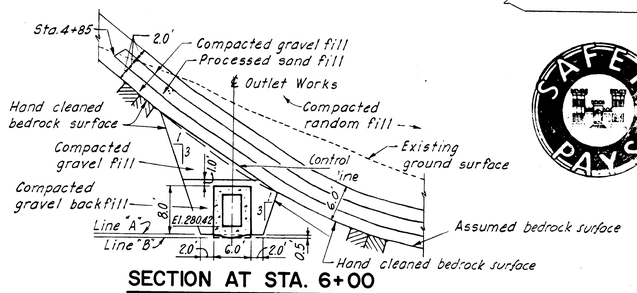

SECTION AT STA. 6+00

(TYPICAL FROM STA. 5+85± TO STA. 6+80±)

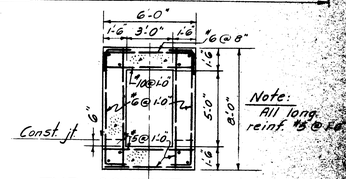

TYP. CONDUIT REINF.

STA. 3+05 TO STA. 6+86

SCALE 1/4" = 1'-0"

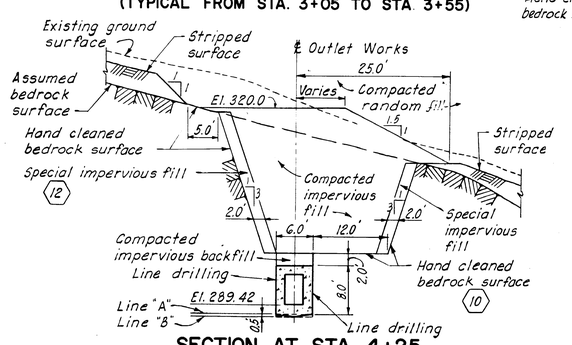

SECTION AT STA. 4+25

(TYPICAL FROM STA. 3+55 TO STA. 4+60)

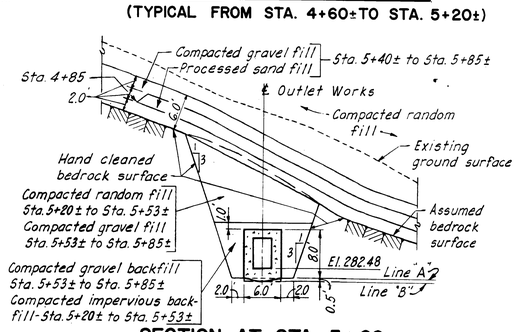

SECTION AT STA. 5+60

(TYPICAL FROM STA. 5+20± TO STA. 5+85±)

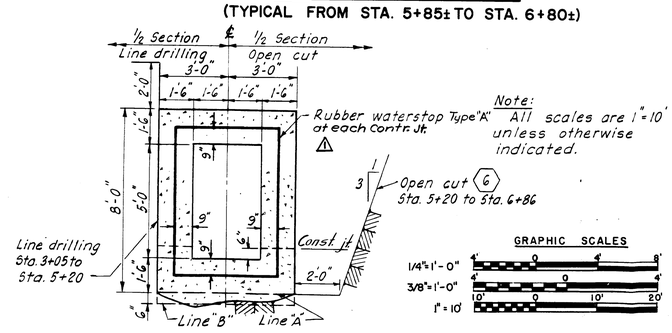

Note: All scales are 1" = 10' unless otherwise indicated.

TYPICAL CONDUIT SECTION

SCALE 3/8" = 1'-0"

Record Drawing

Contract No. DA-19-016-CIV ENG 66-38

REVISION	DATE	DESCRIPTION	
	10/31/86	as built locations of piezometers added by Atlantic Testing Laboratories, Limited	
		Final field corrections	
1	11-24-65	Note revised (Am. #1)	

U.S. ARMY ENGINEER DIVISION, NEW ENGLAND
CORPS OF ENGINEERS
WALTHAM, MASS.

DES. BY M.B. DR. BY A.B. CK. BY C.M.A. M.J.

SUBMITTED: CHIEF, LAYOUT SECTION

REVIEWED: PROJECT ENGINEER

APPROVED: CHIEF, DESIGN BRANCH

APPROVED: CHIEF, ENGINEERING DIVISION

HOUSATONIC RIVER FLOOD CONTROL
HOP BROOK DAM
OUTLET WORKS
CONDUIT — PLAN AND SECTIONS

HOP BROOK CONNECTICUT

DATE SEPT. 19

SCALE AS NOTED | SPEC. NO. CIV. ENG. 19-016-66-38

DRAWING NUMBER HOU-5

SHEET 31

MODERN BLUE PRINT CO. D-18935

NED FORM 223
27 Sept 49

NEW ENGLAND DIVISION
CORPS OF ENGINEERS, U S ARMY

PAGE ___

SUBJECT: HOP BROOK PIEZOMETER INSTALLATION II

COMPUTATION: TYPICAL INSTALLATION CROSS-SECTION FD-A, FD-B, FD-C

COMPUTED BY: TR CHECKED BY: ___ DATE: ___

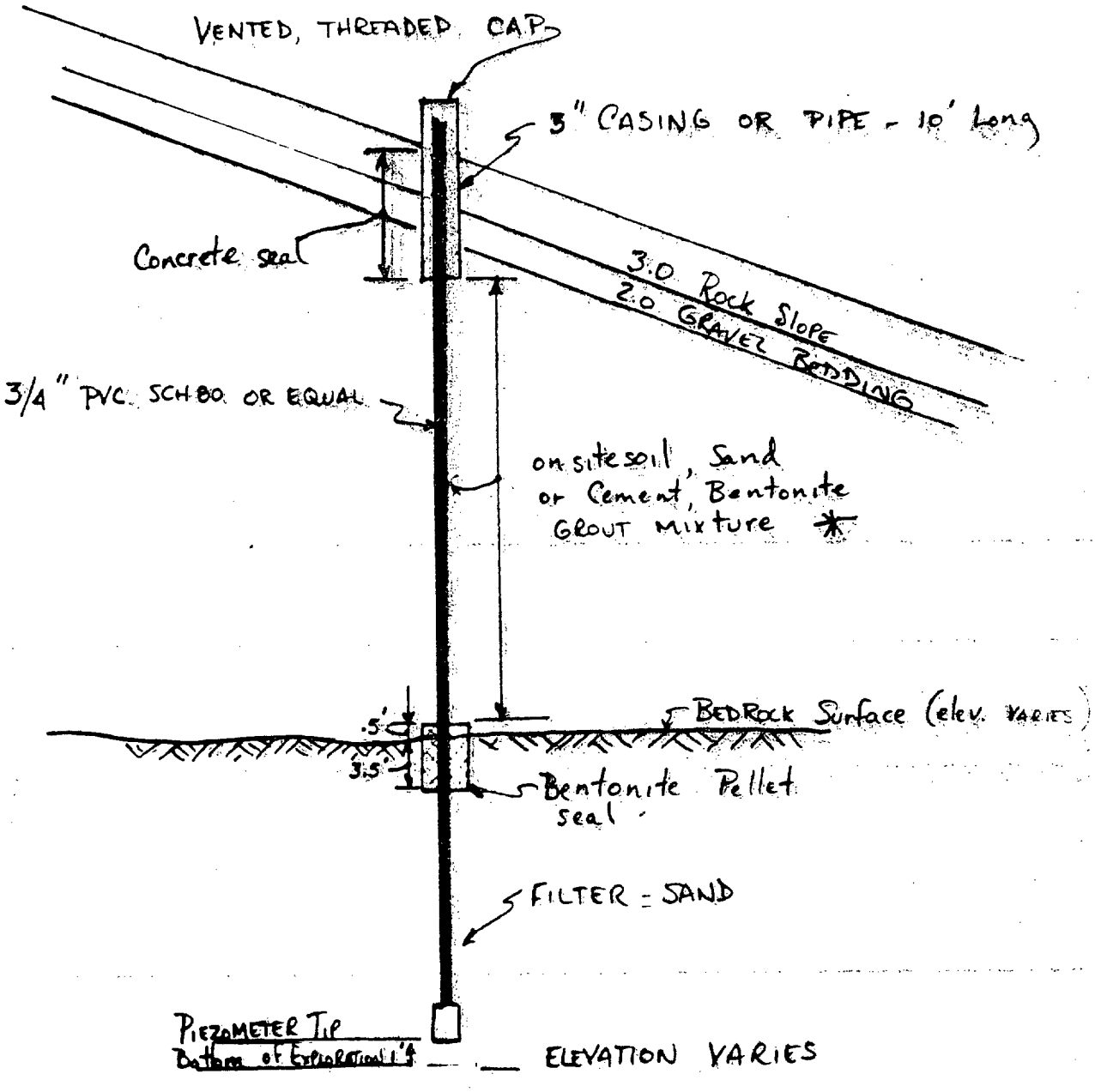

*Note: USE CEMENT-BENTONITE GROUT MIXTURE THRU ENTIRE LENGTH OF IMPERVIOUS FILL

Not to Scale
Attachment

NED FORM 223
27 Sept 49

NEW ENGLAND DIVISION
CORPS OF ENGINEERS, U.S. ARMY

PAGE

SUBJECT: Hop Brook Piezometer Installation II
COMPUTATION: FD-D Installation Cross-Section
COMPUTED BY: TR
CHECKED BY:
DATE:

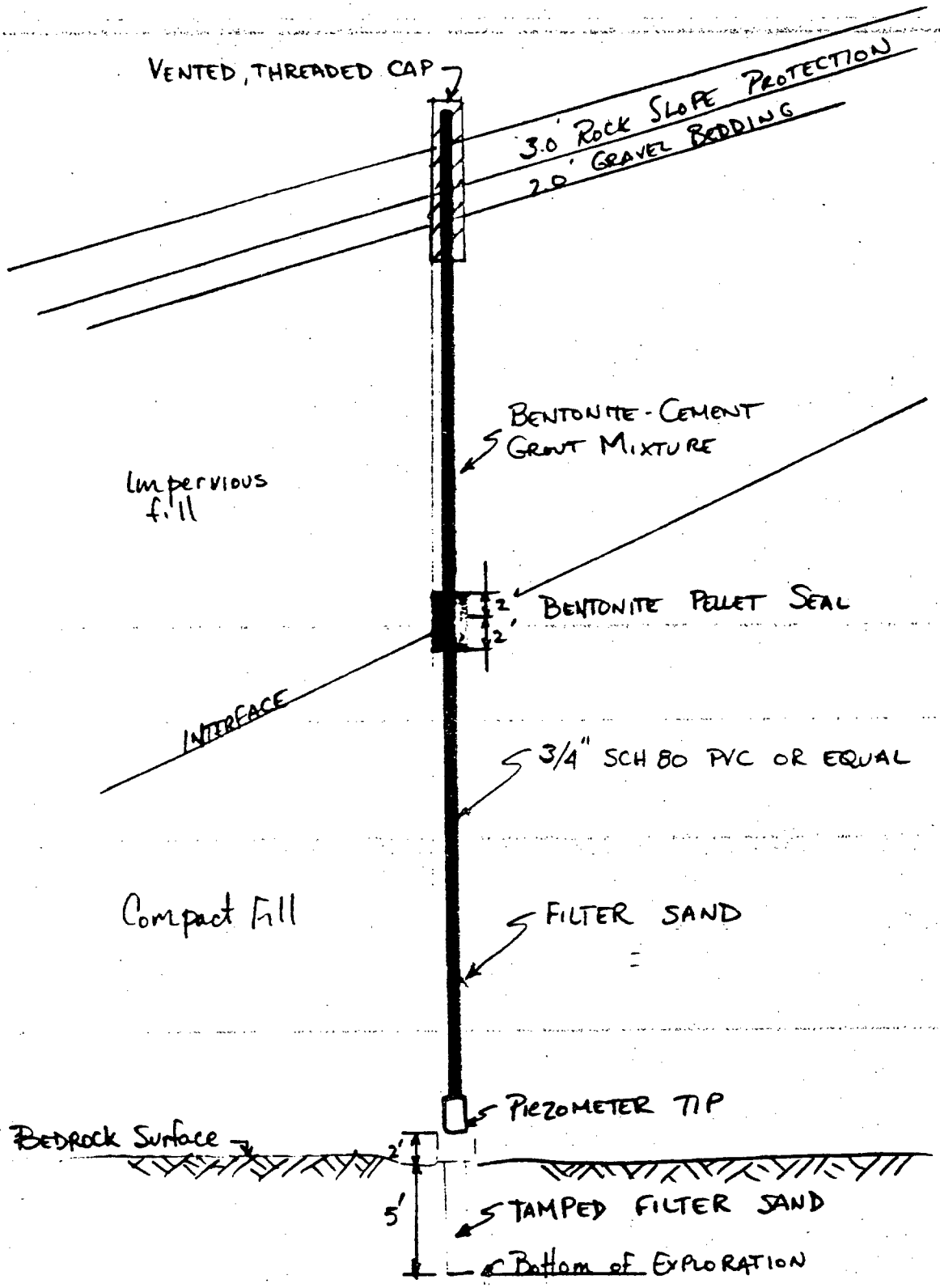

Not to Scale

Attachment 3

NED FORM 223
27 Sept 49

NEW ENGLAND DIVISION
CORPS OF ENGINEERS, U S ARMY

PAGE

SUBJECT HOP BROOK PIEZOMETER INSTALLATION II
COMPUTATION FD-E INSTALLATION CROSS-SECTION
COMPUTED BY R CHECKED BY DATE

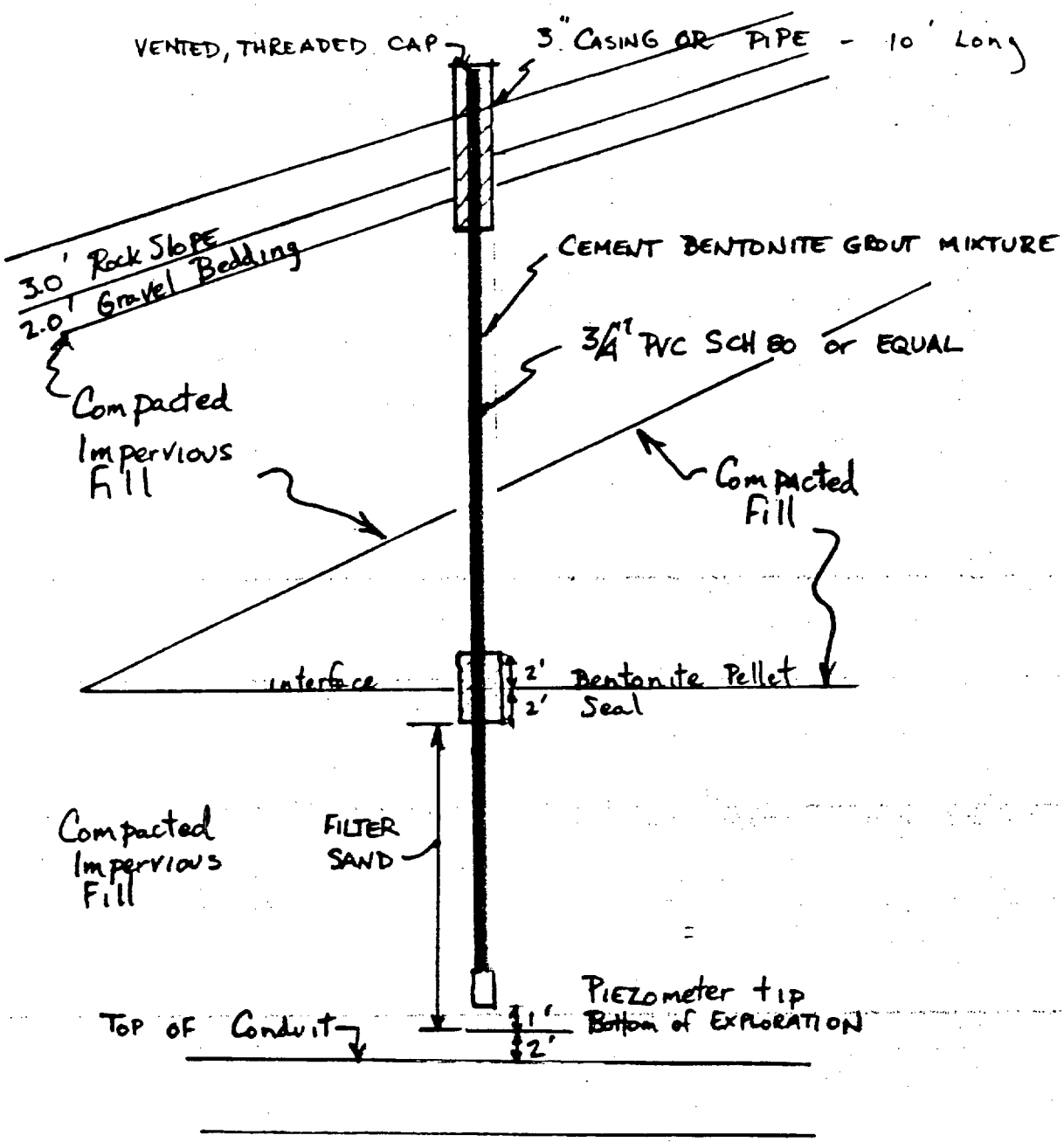

Not to Scale

Attachment

NED FORM 223
27 Sep 49

NEW ENGLAND DIVISION
CORPS OF ENGINEERS, U.S. ARMY

PAGE

SUBJECT: HOP BROOK PIEZOMETER INSTALLATION II
COMPUTATION: FD-F INSTALLATION CROSS SECTION
COMPUTED BY: TR CHECKED BY: DATE:

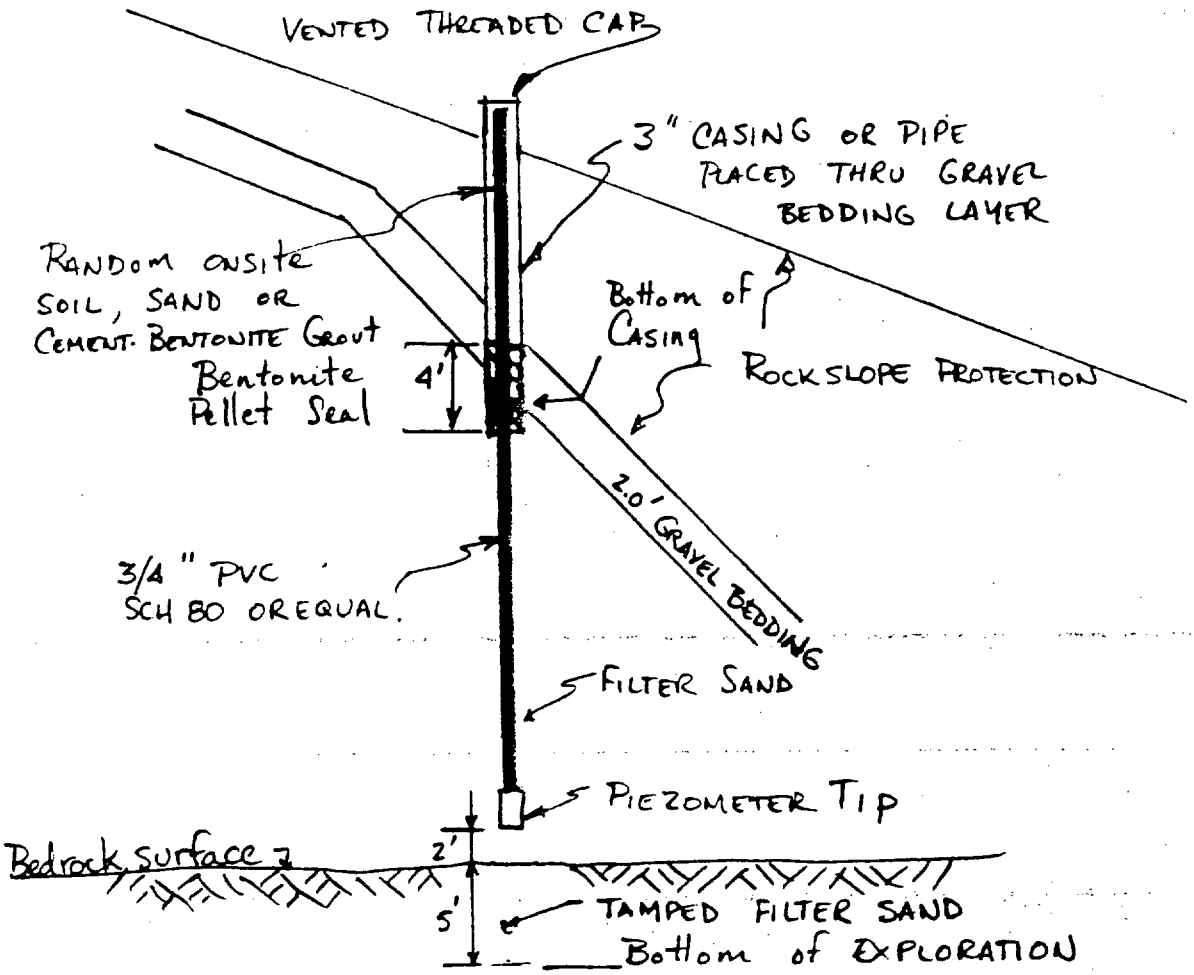

Not to Scale

Attachment 3

b. Project Site

The project is at the site of a flood control dam containing the waters of Hop Brook in Naugatuck, Connecticut. The investigation convered both the dam's upstream and downstream slopes as well as the dam's crest. Boulder-sized rip rap on the 2.5:1 slopes covered the work area. A general project map, site location map and boring location plan are included in Section 8. General plans of the dam facility, provided to us in the Delivery Order, are in part (a) of this section.

c. Purpose

The purpose of the exploration was to recover soil and rock samples for classification and to install observation wells in order to monitor the phreatic surface and to determine pore pressures and average permeabilities of the dam foundation. Information obtained through this study will aid in determining water movement through the dam and will assist in understanding the genesis of the depression area which has formed on the downstream side of the dam. A survey grid established in this depression area shall be monitored to document slope movement.

d. Scope of Work

Survey, inspection, exploration and piezometer installation instructions, which were provided by the Army Corps of Engineers, New England Division, in Delivery Order No. 0014, are included in Section 3a. General inspection, exploration and well installation instructions were provided by the Army Corps of Engineers, New England Division, through the contracted "Specifications for Services and Equipment Necessary for Conducting Geotechnical Exploratory Work, Various Locations in New England and New York". Specific instructions and changes during the course of the work were given verbally during on-site and telephone conversations through a Corps of Engineers representative. All new instructions and changes can be found listed in Table II of Section 5.

Work under this delivery order consisted of locating six (6) test borings by survey. The borings were located both horizontally and vertically by Atlantic Testing Laboratories' surveyors using the centerline of the dam and the centerline of the outlet conduit (Sta 4+60) for horizontal control and the crest monument No. 4 (elevation 380.93') for vertical control. The survey crew was mobilized a second time to provide for final boring locations.

As it was not possible to redrill FD86-5 as requested in the Delivery Order, a boring designated FD-G was marked in the field by a Corps of Engineers representative and located by means of a hand level and tape from FD86-5 by Atlantic Testing Laboratories' geotechnical inspector. This final boring location was also surveyed.

Drilling, sampling and well installation was performed by Atlantic Testing Laboratories' personnel using Atlantic Testing Laboratories' equipment. The test borings were advanced and sampled as indicated on Attachment Nos. 1, 2, and 3 of the Delivery Order (Section 3a) and as outlined in the contract specifications and as amended in the conversations outlined in Table II, Section 5. Overburden sampling was performed using a 300 lb hammer driving a 2 ft split spoon sampler (2-3/8" I.D.) at the intervals noted in Table II, Section 5.

Finally, the grid installed in the area of the 20' x 40' depression along the outlet conduit is being monitored on two-month intervals for a six-month period. This study has not yet been completed; results to date are presented in Section 9.

SECTION 4

QUALITY CONTROL

a. General Certification Statement

I hereby certify that the records, equipment and procedures mentioned below were used to perform the subsurface exploration described herein. I also certify that the work was performed in a professional manner and meets the requirements set forth in the delivery order. This report has been subject to my review and is both complete and technically accurate.

CERTIFIED October 10, 1986

Spencer F. Thew, P.E./L.S.

b. Records Taken

Pertinent drilling procedures, sampling operations, soil classifications and testing data were noted on the following forms provided for use by the Corps of Engineers:

NED 121 (Field Log of Test Boring, Summary)
NED 58 and 58a (Field Log of Test Boring)
NED 130 (Field Log of Test Boring in Rock)
NED 59 (Subsurface Water Observations and Boring Location Sketch)

Information outlining the installed well characteristics were noted on the Piezometer Installation Report and the Monitoring Well Installation Detail. A completed series of logs for each of the borings is included in Section 8 along with location maps.

Sample containers and rock core were labeled using ENG Form 1742 and were delivered to the USACE NED Materials and Water Quality Laboratory on September 30, 1986.

A summary of daily activities and a telephone log are Tables I and II of Section 5, respectively. A chain of custody log is in Section 6. Safety meeting reports, NED Form 251, including exposure time for Atlantic Testing Laboratories', Corps of Engineers and subcontracted personnel, are located in Section 7.

c. Equipment Used

All equipment and supplies were provided by Atlantic Testing Laboratories, Limited, with the exception of that provided by subcontractors. A listing of pertinent equipment follows:

1. Survey Equipment

- Wild Heerburg, T-1, 6 minute theodolite
- Wild Heerburg, NAK1, automatic level
- 25 feet, extendable, fiberglass, stadia rod
- PECO hand level
- fluorescent paint

2. Drilling Equipment

- CME 45 drill rig mounted on skids
- 4" and 3-3/8" O.D. casing with both spin and drive shoes
- Drill rod, NX taper threaded in 2 feet, 5 feet, and 10 feet lengths; used for sampling and turning 3-7/8" roller bit
- Auger, 3-1/4" I.D., 8" O.D., slot fit, hollow stem augers in 2 feet and 5 feet lengths with carbide tip teeth
- Three 1/2" centrifical pumps with 500 feet of fire hose
- One 175 gallon tub, one 80 gallon tub and one 30 gallon tub
- A 6" O.D. by 3 foot diamond bit core barrel; 3" O.D. by 5 foot diamond bit core barrel; 1-1/2" O.D. by 5 foot diamond bit core barrel
- Split spoon samplers, 2-3/8" I.D. by 2 foot in length
- Drilling platform, approximately 8 feet by 12 feet, was constructed of 2" by 10" rough cut timber planks placed on a frame of 4" x 4" and 6" x 8" timber beams; 2" by 4" timbers were used for bracing

3. Well Supplies

- Porous plastic well screen 1" I.D. by 2 feet length
- Threaded 3/4" I.D. schedule 80 PVC riser pipe in 5 feet and 10 feet lengths
- Filter sand, #2 in 100 pound bags
- Bentonite well seal, 3/8" diameter peltonite
- Backfill material was bulk concrete sand
- Well protector, 2" and 3" diameter by 10 feet long black iron pipe threaded to accept a vented pipe cap

4. Well Test Equipment

- 100 foot electronic water level indicator (Roctest Model CPR4)
- Standard watch with stopwatch function

5. Subcontracted Equipment

- International diesel tow truck, with two drums, 3/4" cables, with operator
- Mobile welder with operator

d. Procedures

Seven observation wells were installed in Hop Brook Dam, one on the crest, three on the upstream 2.5:1 rock slope, two on the downstream 2.5:1 rock slope and one on the left abutment of the dam. This involved surveying well locations, building platforms and placing equipment on them, drilling and sampling through the dam embankment and bedrock followed by observation well installation and testing.

1. Survey Procedures

Two Atlantic Testing Laboratories, Limited, surveyors were on-site July 23, 1986, to establish new piezometer locations. Piezometer Nos. FD-A through FD-F were referenced using station 4+60 (intersection of the centerline of the outlet works (conduit) and the centerline of the road on the dam crest) for horizontal control and the crest monument No. 4 (elevation 380.93') for vertical control. This station and road centerline reference points were set under Delivery Order No. 0010.

The surveyors returned to the site on October 6, 1986, to acquire the as-built locations of the installed wells. Also at this time, the settlement grid was measured using the vertical control point established on the head wall of the outlet conduit. This grid is described in ATL Report No. CD011-1-4-86 covering services performed under Delivery Order No. 0010. This is the initial measurement of the elevation of the grid for Delivery Order No. 0014. Two more measurements of the settlement grid will be made during the months of December 1986 and February 1987. A grid location sketch and table of initial readings have been included in Section 9a.

2. Access Procedures

One well was installed at the edge of the dam crest. This was accessed by disconnecting the guard rail wire, winching the CME 45 skid drill rig into place with its self-contained winch equipped with a 5/8" cable, and setting up.

The remainder of the wells required construction of a platform on which to set and operate the CME 45 skid drill rig. The platform material was hand carried down the slope. The founding 6 inches by 8 inches timbers were placed directly on the boulder rip rap and keyed into the slope with use of number 6 (3/4 inch) rebar. Timbers (6 inches by 8 inches and 4 inches by 4 inches) were crossed horizontally to provide a level frame. Planking (2 inches by 10 inches) were tightly nailed producing a level work area. Bracing was added using 2 inches by 4 inches timbers.

The CME 45 skid rig's winch was used to move the rig down the slope. A winch line from the subcontracted wrecker was used as a safety line during down slope movement. The wrecker, located on the dam crest, was implemented to move the rig up slope and to retrieve drilling appurtenances and platform materials at completion.

Enough material was brought to the site to allow construction of three platforms. While the rig was in operation on one platform, the other was being disassembled, and the third was being assembled at the next proposed well location.

3. Sampling and Drilling Procedures

Sampling techniques, as described in the contract and in the delivery order, and as modified during the work period, involved retrieving material using the Standard Penetration Test. A 3-inch O.D. by 2-3/8 inch I.D. by 2 foot long split spoon sampler was driven 1.5 or 2.0 feet, and the blow counts for a 300 lb hammer falling 18 inches were recorded for every 0.5 feet advancement. Refusal was defined as 100 blows with no penetration or bouncing refusal. The sampling interval was 5 feet or continuous when within 20 feet of the piezometer tip.

Samples were classified in the field in accordance with ASTM D-2488. Representative samples were taken from each soil sampling run and placed in one (5 ft sampling interval) or two (continuous sampling) 16 oz jars with hermetically sealed lids. Rock core was placed in 5 ft long core boxes as specified in the contract. Sample jars and rock core were labeled using ENG Form 1742 and were delivered to the USACE NED Materials and Water Quality Laboratory on September 30, 1986. A chain of custody log was maintained to document custody of the samples between Atlantic Testing Laboratories and the Corps of Engineers.

The CME 45 skid rig was equipped to handle several different methods of drilling. Different techniques of advancing each hole, in conjunction with sampling, were employed to best suit the situation. These systems and their effectiveness are generally described as follows:

- 3-1/4" I.D. hollow stem augers, used only for the first 10 ft of FD86-8 on the crest of the dam. Depth of penetration is limited by cobbly material.

- 4" spin casing preceeded by a 3-7/8" roller bit, used only to case the upper 20 ft of FD86-8. This was most useful when only the upper portion of the hole was cased and the remainder drilled using a 3-7/8" roller bit washed with recirculated Clear Mud and water mixture in the open hole.

- 3-3/8" O.D. spin casing used only to telescope through 4" O.D. driven casing in FD86-11 to penetrate caved material at the bottom of the hole.

- 4" drive casing preceded by a 3-7/8" roller bit. This was the method used most widely to case the boring in spite of some difficulty advancing through cobbly material.

- 6" diamond bit core barrel washed with water was used to penetrate the boulder rip rap on the slopes of the dam.

- NX diamond coring washed with water was used to penetrate bedrock.

- AX diamond coring washed with water was only used to verify the material causing refusal in FD86-10 (bedrock as opposed to concrete).

Specific drilling procedures for each well have been recorded on the boring logs contained in Section 8d.

4. Well Installation Procedures

After the boring had been advanced to the required depth, the Clear Mud, if used, was deactivated using Clorox and the drill rods removed. No. 2 filter sand was added to the specified piezometer tip depth, and in FD86-11 and FD86-14, was compacted by tamping as it was added. The 2 ft long porous plastic screen and 3/4" PVC riser pipe were connected and lowered to the determined depth as specified by the Corps of Engineers. No. 2 filter sand was added, followed by a bentonite seal (3/8" peltonite) at least 4 ft thick at the specified depth. The remainder of the open hole was filled with on-site soil and bulk concrete sand or bentonite/cement grout as specified by the Corps of Engineers. A 3" diameter (2" for FD86-12) by 10 ft long steel pipe was placed around the 3/4" riser pipe for protection. The protective pipe was concreted in place allowing a 2 to 4 ft stick up. This was secured with a screw-on pipe cap vented by a 1/8" hole.

Stabilizers were welded to the surface protective casing to prevent future rotation. These consisted of six 3/8" square by 2" long sections of steel welded to the casing at three different intervals in the lower 6 ft of the casing. These stabilizers prevented the casing from moving in any direction after the casing had been cemented in place.

5. Well Testing Procedures

A falling head test, as described in the contract, was performed on each well shortly after installation. This required pouring water down the riser pipe until it completely fills and measuring the water level drop against time. The depth was measured using an electronic water level indicator at 1, 5, 10 and 30 minute increments. All well tests displayed good results, signifying an accurate monitor of the water table.

SECTION 5

SUMMARY OF ACTIVITIES
AND
TELEPHONE LOG

TABLE I

SUMMARY OF ACTIVITIES

NOTE: On-site time as indicated is the inspector's on-site hours.

Date	Activity
4 August	Monday - Mobilize drill rig, drilling personnel (2) and geotechnical inspector, Paul Fisher, to site.
5 August	Tuesday: on-site 07:00-18:00 - Set up on FD86-8(B). - Set up water supply system on upstream side of dam. - Received key to dam gate from Les Butler (Corps). - Met with Paul L'Heureux and discussed the delivery order requirements. - Hold safety meeting. - Stand by time, 12 hours, for on-site moves, safety meeting. - Crew without rig: on-site 6:30-6:30, standby time 12 hours.
6 August	Wednesday: on-site 07:00-18:00 - Advance FD86-8(B) from 0 to 30.7'; case 25' of the hole. - Receive key to warehouse at the basin office from Les Butler. - Crew without rig: on-site 6:30-7:00, direct drilling time 11.5 hours.
7 August	Thursday: on-site 07:00-18:00 - Advanced FD86-8(B) from 30.7' to 50'; case 45' of the hole. Note difficult drilling due to cobbles. - Crew without rig: on-site time 6:30-6:30, direct drilling time 12 hours.
8 August	Friday: on-site 07:00-13:00 - Advance FD86-8(B) from 50' to 55'. Note possible bedrock at 54'. - Theresa Beddoe on-site to review job requirements, 11:00-13:00. - Crew without rig: on-site time 6:00-11:00, direct drilling time 5 hours.
11 August	Monday: on-site 10:00-18:00 - Advance casing in FD86-8(B) to 50'. Note the hole had caved. Clean out boring back down to 55'. - Remark existing piezometers with spray paint. - Crew without rig: on-site time 6:00-6:30, no direct drilling or standby time.

Date	Activity
12 August	Tuesday: on-site 07:00-18:30 - Advance FD86-8(B) from 55.0' to 79.5'. - Pick up piezometer supplies from Piezometer Design, Stamford, CT. - Pick up new wrenches. - Platform finished over PZ-C; construction of platform for PZ-E started. - Hold safety meeting. - Stand by time, 1/2 hour, for safety meeting. - Crew without rig: on-site time 6:30-6:30, standby time 8 hours for platform construction.
13 August	Wednesday: on-site 07:00-17:30 - Advance FD86-8(B) from 79.5' to 97.5', 1/2' deeper than the Corps requested, to ensure that we had the proper footage. - Set piezometer tip at 96' as requested by Corps. Install bentonite seal at 53.5' to 61', sealing the bedrock/soil interface. - Begin to pull the casing. - Crew without rig: on-site time 6:30-6:30, standby time 6.5 hours for platform construction.
14 August	Thursday: on-site 07:00-18:00 - Pull casing from FD86-8 (B), hole open to 40'. Fill with sand to bottom of casing. Install 10' surface casing with screw cap and concrete seal. - Note that the welding of stabilizers on the surface casing was not done by the Corps, but by a subcontractor. - Move rig and equipment to FD86-9(C). - When positioned over the hole, discover 7.5' core barrel is too long to reach boring location. Call Canton to request the purchase of a shorter barrel and bit. - Prepare site for future operations. - Purchase topographic maps for the job in New Haven. - Stand by time, 7 hours, for on-site moves. - Crew without rig: on-site 6:30-5:30, 5 hours standby time for on-site moves.
15 August	Friday: on-site 07:00-11:00 - Clean up site, finish forms. - Sound FD86-8(B). Water level stable at 60.3'. - Crew without rig: not on site.
18 August	Monday: on-site 20:00-21:00 - CME 45 drill rig was vandalized over the weekend by apparent juveniles, wires were ripped off, gauges broken, gas caps taken, gasoline in tank contaminated by oil, pump vandalized. - Drillers contacted a mechanic in Bethel who will be on-site at 8:00 tomorrow to repair the rig. - Stand by time, 6-1/2 hours, for rig repairs. - Crew without rig: not on site.
19 August	Tuesday: on-site 06:30-19:30 - Run falling head test on FD86-8(B). - Report vandalism to Corps and Naugatuck Police. - Estimate damage at $120, 30 lost man hours.

Date	Activity
	- Repair rig. - Hold safety meeting. - Advance FD86-9(C) to 4.8'. - Stand by time, 6-1/2 hours, for rig repairs and safety meeting. - Crew without rig: not on site.
20 August	Wednesday: on-site 06:30-17:30 - Advance FD86-9(C) from 4.8' to 30.0'. Drive casing to 30'. - Experience minor difficulty of rig shifting during drilling of cobble layers (26' to 30'). - Paul L'Heureux on-site 12:30-16:30. - Examined location of PZ-E and found that the rig will fit under the service bridge at that point. - Crew without rig: not on site.
21 August	Thursday: on-site 06:30-18:00 - Paul L'Heureux on-site 08:30-12:00. - Drillers attempted to rotate surface casing of FD86-8 and were unable to do so, which indicated that the stabilizers installed on the casing are functioning properly. - Advance FD86-9(C) from 30' to 44'. Probable bedrock encountered at 43'. Drive casing to refusal at 37'. Attempt to continue drilling and discover that the casing's drive shoe was bent. Pull and crack casing. Last 5' of casing remained in the hole as the deformed shoe would not pass through the 2' boulder at the surface. - Crew without rig: not on site.
22 August	Friday: on-site 06:30-11:30 - By bracing the last surface boulder with NW rod using the rig, we were able to pull the remainder of the casing and shoe using the 300 pound hammer. - Hole had effectively caved to the surface, making it doubtful that we could spin the casing past 30'. - Clean up site, securing everything possible in the warehouse at the basin office. - Crew without rig: not on site.
25 August	Monday: on-site 12:00-18:00 - Replace gin rope which was stolen over weekend. - Advance NW casing to 30' in FD86-9(C). - Prepare job site for drilling operations. - Doug Ferris on-site for introduction to job and training in geotechnical inspection for the Corps. - Crew without rig: on site 12:30-6:00, direct drilling time 4.5 hours.
26 August	Tuesday: on-site 06:30-18:30 - Advance casing to 44' in FD86-9(C). - Advance FD86-9(C) from 44' to 69'. - Hold safety meeting. - Standby time, 1/2 hour, for safety meeting. - Crew without rig: on site 6:30-7:00, stand by time 0.5 hour, direct drilling time 11.5 hours.

Date	Activity
27 August	Wednesday: on-site 06:30-18:00 - Advance FD86-9(C) from 69' to 76'. - Set piezometer tip at 75' as requested by Corps. Install bentonite seal from 46.5' to 42.5', sealing the bedrock/soil interface. - Pulled casing and hole caved in to 38'. Pack hole with sand to 26.8', with cement/bentonite grout to 7'. - Moved off FD86-9; dismantled platform - Detected leak in rig's hydraulic oil box; removed box for next day's repairs. - Standby time, 4 hours, for on-site moves and rig repairs. - Crew without rig: on-site 6:30-6:30, standby time 4 hours, direct drilling time 8 hours.
28 August	Thursday: on-site 06:30-18:00 - Install protective casing around FD86-9 using cement/bentonite grout to 3'. Casing will be sealed into surface boulder later. - Rig's hydraulic box was repaired and reinstalled. - Cleaned FD86-9 work area. - Relocated rig to FD86-10(E) well site. - Advanced FD86-10 from 0 to 4'. - ATL truck required a new alternator. - Standby time, 7 hours, for rig repair and on-site moves. - Crew without rig: on-site 6:30-6:30, standby time 7 hours, direct drilling time 5 hours.
29 August	Friday: on-site 06:30-14:30 - Advanced FD86-10(E) from 4' to 5', noting that drilling proceded slowly through boulder/cobble layer. - Detected leak in hydraulic oil box; deferred repair to next week to avoid potential hose vandalism over the long weekend. - rig trailer had been pushed over parking curb by vandals; repositioned trailer. - Cleaned site. - Crew without rig: on-site 6:30-2:30, direct drilling time 7 hours.
2 September	Tuesday: on-site 09:30-17:30 - Leak in hydraulic oil box repaired. - Advance FD86-10(E) from 5' to 21.5'. - Standby time, 3 hours, for rig maintenance. - Crew without rig: on-site 9:30-5:30, standby time 3 hours, direct drilling time 4 hours.
3 September	Wednesday: on-site 06:30-18:30 - Advance FD86-10(E) from 21.5' to 50'. - Note drilling slow due to continuous sampling, washing out between each sample, and having to break rod due to limited overhead clearance. - Drill rig charging system required maintenance and new parts were ordered. - Standby time, 1.5 hours, for safety meeting and rig maintenance. - Crew without rig: on-site 6:30-7:00, standby time 1 hour, direct drilling time 11.5 hours.

Date	Activity

4 September Thursday: on-site 06:30-19:00

- Electrical problems continue. Battery dead in the morning; charge it from the ATL truck before operations commence. Electrician expected on-site tomorrow.
- Advance FD86-10(E) to 50' where encounter refusal. Run AX core 2" to verify bedrock as opposed to concrete conduit.
- Call John Hart re: job progress.
- Examine all soils from boring and confirm the absence of a significant change in soil character which would indicate impervious fill. However, the boring logs indicated a significant change in blow counts at 37.0', which is approximately the depth where the change was expected to occur. It was further noted that the clear mud had penetrated the sample from 36.0-37.0' and not from 37.0'-38.0'. Examination of the drawings sent with the delivery order revealed the pervious fill layer should be approximately 9' thick and thinning in an upstream direction. The lack of a noticeable change from pervious to impervious fill could be caused by (1) improper or imprecise construction of the dam, (2) a loss of fines due to piping through the dam along the conduit, (3) a failure to see the horizon during sampling due to its narrow extent or due to sampling a siltier part of the pervious fill.
- Call John Hart re: job progress and recommendations.
- Advance FD86-10(E) to 58.0'.
- Set piezometer tip at 57.0'. Install bentonite seal from 39.0' to 35.0', bridging the possible material change indicated by the change in blow counts.
- run a falling head test of FD86-9.
- Standby time, 2.5 hours, for on-site moves and rig maintenance.
- Crew without rig: on-site 6:30-6:30, standby time 2.5 hours, direct drilling time 9.5 hours.

5 September Friday: on-site 06:30-12:30

- Moved rig to FD86-11(D); dismantled platform for FD86-10.
- Installed surface casing on FD86-10 and sealed with gravel mix concrete.
- Placed concrete surface seal on protective casing of FD86-9.
- Detect additional hydraulic box problems on rig, probably due to skidding up and down boulder embankment.
- Electrician was not available for rig repairs.
- Standby time, 2 hours, for on-site moves.
- Crew without rig: on-site 6:30-12:30, standby time 4.5 hours, direct drilling time 1.5 hours.

8 September Monday: on-site 12:00-17:30

- Advance FD86-11(D) from 0 to 3'.
- Completed dismantling platform from FD86-10, moved lumber to other side of dam.
- Standby time, 4-1/2 hours, for rig maintenance and on-site moves.
- Crew without rig: on-site 12:00-5:30, standby time 4.5 hours, direct drilling time 1 hour.

Date	Activity

9 September Tuesday: on-site 06:30-18:00
- Advance FD86-11(D) from 3' to 30'.
- Repairman on-site to repair rig's electrical system but was unable to do so.
- Hold safety meeting.
- Standby time, 4 hours, for safety meeting and rig maintenance.
- Crew without rig: on-site 6:30-6:00, standby time 4 hours, direct drilling time 7.5 hours.

10 September Wednesday: on-site 06:30-18:00
- Advance FD86-11(D) from 30' to 50'. Operations difficult due to boulders and cobbles.
- Crew without rig: on-site 6:30-6:00, direct drilling time 11.5 hours.

11 September Thursday: on-site 06:30-19:00
- Advance FD86-11(D) from 50' to 60'. Caving at 45' to 55' necessitated telescoping of 3-3/8" O.D. casing to 50' by spinning.
- Set piezometer tip at 52.5'. Distance from 52.5' to 60' was packed with sand and tamped. Install bentonite seal from 28' to 32'.
- Standby time, 1/2 hour, for on-site moves.
- Crew without rig: on-site 6:30-7:30, standby time 0.5 hours, direct drilling time 12.5 hours.

12 September Friday: on-site 06:30-15:00
- Completed FD86-11, placing cement/bentonite grout to 7', and installing protective surface casing with concrete seal.
- Conducted falling head test on FD86-10.
- Removed rig from FD86-11 and relocated to top of dam for repairs.
- Dismantle platform for FD86-11.
- Erected drilling platform for PZ-G.
- Cleaned site and relocated equipment for drilling on downstream side of dam.
- Standby time, 7 hours, for on-site moves.
- Crew without rig: on-site 6:30-4:30, standby time 7.0 hours, direct drilling time 2.5 hours.

15 September Monday: on-site 12:00-18:00
- Finish building platform for FD86-12(G).
- Move rig onto hole.
- Locate hole using hand level and tape from FD86-5.
- Conduct falling head test on FD86-11.
- Standby time, 7 hours, for on-site moves.
- Crew without rig: on-site 10:00-6:00, standby time 7.0 hours, 1 hour direct drilling.

16 September Tuesday: on-site 06:30-19:30
- Advance FD86-12(G) from 0 to 31'.
- Rig repairman did not come to the site; still using battery to jump start the rig.
- Build drilling platform for PZ-A.
- Hold safety meeting.
- Standby time, 2 hours, for safety meeting and rig maintenance.
- Crew without rig: on-site 6:30-7:30, 2 hours standby time, 11 hours direct drilling.

Date	Activity
17 September	Wednesday: on-site 07:00-18:30 - Advance FD86-12(G) from 31' to 41'. - Pull core barrel and change bit because of lack of penetration. Ream hole with new bit before drilling from 31' to boring completion at 41'. - Set piezometer tip at 275', install bentonite seal from 291.5' to 187.5', fill with bentonite/cement grout. - Complete platform for FD86-13(A). - Move equipment to platform. - Standby time, 2 hours, for on-site moves. - Crew without rig: on-site 6:30-6:30, standby time 2 hours, direct drilling time 10 hours.
18 September	Thursday: on-site 06:30-18:00 - Move rig to FD86-18(A). - Dismantle platform for FD86-12. - Perform falling head test on FD86-12. - Advance FD86-13(A) from 0 to 15'. - Standby time, 4 hours, for on-site moves. - Crew without rig: on-site 6:30-6:30, standby time 4 hours, direct drilling time 8 hours.
19 September	Friday: on-site 06:30-14:30 - Advance FD86-13(A) to 41.5'. Encountered bedrock at 20' when it was expected at 53'. Arranged for delivery of additional core boxes. - Upstream side of dam has been policed, debris removed, guardrails remounted. - Crew without rig: on-site 6:30-6:30, 9 hours direct drilling time.
22 September	Monday: on-site 8:30-18:30 - Advance FD86-13(A) from 41.5' to 56.5'. - Begin assembling drilling platform for FD86-14(F). - Crew without rig: on-site 8:30-6:30, 9 hours standby time.
23 September	Tuesday: on-site 6:30-18:00 - Advance FD86-13(A) from 56.5' to 64.5'. - Set piezometer tip at 63.5'; install bentonite seal at bedrock surface. Protective casing to be installed tomorrow. - Removed rig from FD86-13 with wrecker to top of dam where a mechanic repaired rig's electrical system. - Dismantled FD86-13's drilling platform; completed drilling platform for FD86-14(F). - Standby time, 2.5 hours, for on-site moves. - Crew without rig: on-site 6:30-6:00, 4 hours standby time, 5.5 hours direct drilling time.
24 September	Wednesday: on-site 6:30-18:30 - Relocated rig to FD86-14(F) with assistance of wrecker. - Installed protective casing on FD86-13. - Advanced FD86-14(F) from 0 to 7.5' where broke through surface boulders. - Performed falling head test on FD86-13.

Date	Activity
	- Conducted safety meeting. - Standby time, 7.5 hours, for on-site moves and safety meeting. - Crew without rig: on-site 6:30-7:00, direct drilling time 5 hours, standby time 7.5 hours.
25 September	Thursday: on-site 6:30-18:00 - Advanced FD86-14(F) from 7.5' to 32'. - Crew without rig: on-site 6:30-6:00, direct drilling time 11.5 hours.
26 September	Friday: on-site 6:30-16:00 - Advanced FD86-14(F) from 32' to 54'. - Set piezometer tip at 47.0', placed sand filter to depth of 41' and secured well for upcoming weekend. - Cleaned site. - Crew without rig: on-site 6:30-4:30, direct drilling time 10 hours.
29 September	Monday: on-site 9:00-18:30 - After obtaining additional sand, completed setting the piezometer in FD86-14. Installed bentonite seal from 11' to 5.9'. Surface casing will be set tomorrow. - Relocated rig to the top of the dam with the assistance of a wrecker. - Began dismantling drilling platform for FD86-14. - Paul L'Heureux on-site 10:30 - 16:30 to observe final drilling operations, site clean up. - Standby time, 5.5 hours, for bore hole moves. - Crew without rig: on-site 9:00-6:30, standby time 5.5 hours, direct drilling time 4 hours.
30 September	Tuesday: on-site 6:00-16:30 - Work on finishing up the logs. - Set surface casing and cement seal on FD86-14. - Perform falling head test of FD86-14. - Drive to Waltham, MA to deliver samples, pick up mylars and pool elevation data. - Return to Hop Brook Dam to assess progress of clean up operations. - Standby time, 11 hours, for on-site moves. - Crew without rig: on-site 6:30-6:30, 11 hours standby time, 1 hour direct drilling.
1 October	Wednesday - Final site cleanup, demobilization of drilling crew. - Standby time, 4.5 hours, for on-site moves. - Crew without rig: on-site 6:30-6:30, 4.5 hours standby time.
6 October	Monday: on-site 10:30-13:00 - Mobilize surveyor and rodman to site. - Survey in piezometer locations and grid point elevations. -

TABLE II

Telephone Log

Date	Conversation
5 August	Tuesday: Paul L'Heureux, on-site - Use 3/4" PVC risers. - Corps will weld stabilizers on the 3" protective pipe. - FD86-5 will not be redrilled, but a new well installed nearby. - Soil sampling will be performed at 5' intervals with one jar of soils retained for each sample. Twenty feet above the piezometer, continuous sampling will be performed with two jars of soils retained for each sample. - All bedrock shall be cored.
6 August	Wednesday: John Hart - Core and retain all bedrock to the noted elevation. - FD86-5 will not be redrilled, but a new well installed nearby.
7 August	Thursday: Paul L'Heureux - Job progress. - ATL will change inspectors to Theresa Beddoe starting next week.
12 August	Tuesday: Paul Schimelfenyg - Paul L'Heureux out of the office until Friday, 8/15/86; deliver daily job progress updates to John Hart. - Left message for John Hart re: job progress. - Asked about the delivery order number for the job, as it was assigned the same number as West River, New Haven, CT.
14 August	Thursday: John Hart - Delivery order number is 0014. - Make drilling logs as detailed as possible, get a rough idea for percent water loss. - Continue to use larger spoon as gravel will plug smaller spoon. - The boring to replace FD86-5 will probably be moved upstream. - Paul L'Heureux will be on-site Monday and Tuesday of next week. - The Chief of the Geotechnical Engineering Branch will visit the site during the first week of September. - About the stabilizers welded to the protective casing: after the cement has cured, apply wrenches to casing to see if it is truly stable.
15 August	Friday: Paul L'Heureux - Reported job progress. - Will be on-site Monday and Tuesday of next week.
19 August	Tuesday: Paul L'Heureux - Report vandalism to drill rig. - Expect him on-site tomorrow. - Report time spent for rig repairs as standby time.

Date	Conversation
20 August	Wednesday: Paul L'Heureux, on-site - Reiterated need to triple space soil classifications. - Located position of PZ-G (replacement of FD86-5), requested the tip elevation at 275 and the seal placed at the elevation of FD86-5 depending on the rock type encountered.
21 August	Thursday: Paul L'Heureux, on-site - On logs, depths and elevations to 0.1' are adequate. - Looked at rock core from FD86-8; place seal for FD86-9(C) at the top of rock without plugging the highly fractured zone.
22 August	Friday: Paul L'Heureux - Recommended using core barrel to redrill hole. - Make progress reports to John Hart next week.
23 August	Tuesday: John Hart - Reported job progress. - Discussed vandalism and increased security measures. - He questioned whether the roller bit would progress the borings more rapidly. No, it would be slower. - Informed Corps about Doug Ferris' arrival and training and substitution for Theresa Beddoe when needed. - Corps requested that ATL keep original inspector on the job.
27 August	Wednesday: John Hart - Reported job progress. - Questioned if location of PZ-E may cause rig tower interference with service bridge. No.
28 August	Thursday: John Hart - Reported job progress.
29 August	Friday: John Hart - Reported job progress.
3 September	Wednesday: John Hart - Reported job progress. - Requested that if refusal was encountered, material be cored in 6" runs to avoid possibility of puncturing cement conduit.
4 September	Thursday: John Hart, first call. - Reported job progress: have encountered refusal in bedrock. - Recommended a 4' run, monitoring wash water for any indications of cement. If that run is successful, make a second 4' run and place the piezometer tip one foot above bottom of hole. - Soils do not noticeably change character at 35' where there was an expected change from pervious soils above to impervious soils below. The seal was to be placed at this change. - Recommended omitting the seal entirely: place sand to 26' and bentonite/cement grout to surface.

Date	Conversation

4 September Thursday: John Hart, second call.
- Relay my concern regarding the missing impervious fill horizon and the change in blow counts at 37.0'. I felt that if a pervious horizon did exist, it was vital to seal it from the lower impervious layer so that the well would see only piping occurring along the conduit which was its stated purpose. If a pervious horizon did not exist, then placing a seal at 37.0' would not adversely affect the usefulness of the piezometer.
- John Hart concurred, and the bentonite seal was placed from 39.0' to 35.0'.

5 September Friday: John Hart
- Reported job progress.

10 September Wednesday: John Hart
- Reported job progress.
- Discussed hard drilling at 50'. He stressed that we do what is necessary to reach bedrock, core 5' into bedrock and set piezometer tip at 2' above bedrock.
- John Hart was informed that due to the gravelly sand and cobbles, we could damage or lose steel in this hole.

11 September Thursday: Paul L'Heureux
- Reported job progress.
- Suggested we spin smaller casing through larger casing to ensure correct installation of piezometer.

12 September Friday: Paul L'Heureux
- Reported job progress.

16 September Tuesday: John Hart
- Reported job progress.
- Requested clarification regarding the setting of the piezometer, FD86-12(G).
- Recommended placing tip lower and seal higher (287' - 291') than Paul L'Heureux requested in the field.

17 September Wednesday: Paul L'Heureux
- Requested clarification regarding the placement of the piezometer, FD86-12(G).
- Set tip at the requested elevation, 275', and set the seal as John Hart requested, from 287'-291'.

22 September Monday: John Hart
- Reported job progress.
- Confirmed piezometer location for FD86-13.

25 September Thursday: left message
- Job progress update.

26 September Friday: John Hart
- Reported job progress.
- Confirmed location of bentonite seal for FD86-14, 7' to 11'.

Date	Conversation
29 September	Monday: Chris Alley - Leave message for Terry Wong requesting copies of mylars of the delivery order attachments and a listing of pool elevations for inclusion in the report.
30 September	Tuesday: Yuri Yatsevitch, Ron DeFilippo, Terry Wong - Future work.
6 October	Monday: Paul L'Heureux - Corps requested rough elevations for the borings. - Informed Corps that surveying of final boring locations and monitoring of settlement grid began today.

SECTION 6

CHAIN OF CUSTODY LOG

ATLANTIC TESTING LABORATORIES, Limited

CHAIN OF CUSTODY LOG

PROJECT: Hop Brook Dam, CT CD017 D.O. #14

ITEMS:

Tubes none

Bottles none

Jar Samples 6 boxes

Core Boxes 10 boxes

Sampling Logs seven borings

Date & Time Received	Date & Time Transferred	Comments	Custodian
6 August	as sampled		Theresa A. Beddoe
	30 Sept 86 12:45		[illegible]

SECTION 7

SAFETY REPORTS

WEEKLY SAFETY MEETING

NEDSO

Date held 8-4-86

THRU: Area Engineer, New England Area

Time 0800

TO: Safety Office, NED

1. Weekly safety meeting was held this date for the following personnel:

Contract No. DACW 33-85-D-0011 D.O. 013

Contractor Atlantic Testing Lab

Conducted By P. Fisher

All personnel present (Contr) 3
(Sub) —
(Govt) —

Subjects discussed (Note, delete, or add):
EM 385-1-1, Section: _____

Paul Fisher
Paul Davis
Randy Todd

— Accident Prevention Plan

— Individual Protective Equipment - Hardhat & Shoes

— Prevention of Falls - On Slope

Back Injury, Safe Lifting Techniques -

Fire Prevention -

— Sanitation, First Aid, Waste Disposal - Trash Can Required

— Tripping Hazards - trash, hose, nails in lumber - Equipment & Supplies

Staging, Ladders, Concrete Forms, Safety Nets -

Hand Tools, Portable Power Tools, Woodworking Machinery -

— Equipment Inspection & Maintenance (Zero Defects) - Drill Rig

— Hoisting Equipment - Drill Rig

— Ropes, Hooks, Chains and Slings - Cable

Electrical Grounding, Temporary Wiring, GFCI -

Lockouts for safe clearance procedures - electrical, pressure, moving parts -

Welding, Cutting -

Excavations -

— Loose Rock and Steep Slopes - Dam Slope Will Be Traversed With Caution

Explosives -

Water Safety -

Toxic materials - hazards, MSDS, respiratory, ventilation -

Other - First Week On Site, All ATL Personnel Have Worked Here Before

2. Forwarded.

Prepared by P. Fisher Title Eng

Signature [signature]
Resident Engineer

CF: On Site Hours For Last Week
0

NED FL 251

WEEKLY SAFETY MEETING

NEDSO

Date held 8/12/86

THRU: Area Engineer, New England Area

Time 12:30-1:00

TO: Safety Office, NED

Report No. CD017

1. Weekly safety meeting was held this date for the following personnel:

Contract No. /D.O.No. 0014 Contractor Atlantic Testing Laboratories, Ltd.

Conducted By TABeddoe

All personnel present (Contr) 5
(Sub) 0
(Govt) 0

Subjects discussed (Note, delete, or add):
EM 385-1-1, Section: _____

✓ Accident Prevention Plan

✓ Individual Protective Equipment - hard hats, gloves

✓ Prevention of Falls - watch rip rap slope

✓ Back Injury, Safe Lifting Techniques -

Fire Prevention -

✓ Sanitation, First Aid, Waste Disposal - Kit in good order

✓ Tripping Hazards - trash, hose, nails in lumber -

✓ Staging, Ladders, Concrete Forms, Safety Nets -

Hand Tools, Portable Power Tools, Woodworking Machinery -

✓ Equipment Inspection & Maintenance (Zero Defects) -

Hoisting Equipment -

✓ Ropes, Hooks, Chains and Slings - condition of cathead rope

Electrical Grounding, Temporary Wiring, GFCI -

Lockouts for safe clearance procedures - electrical, pressure, moving parts -

Welding, Cutting -

Excavations -

✓ Loose Rock and Steep Slopes - dam side

Explosives -

Water Safety -

Toxic materials - hazards, MSDS, respiratory, ventilation -

Other -

Prepared by TABeddoe Title Geologist

2. Forwarded.

Signature Theresa A. Beddoe
Resident Engineer

CF: EXPOSURE HOURS:
Work Date: 8/4-8/8
Non-work Date: 8/3, 8/9

Man Hours:
Contr: 120
Subcontr: 0
Govt: 3
TOTAL: 123

NED FL APR 82 251

WEEKLY SAFETY MEETING

NEDSO

Date held 19 Aug 86

THRU: Area Engineer, New England Area

Time 12:30 - 1:00

TO: Safety Office, NED

Report No. CD017

1. Weekly safety meeting was held this date for the following personnel:

Contract No. /D.O.No. 0014 Contractor Atlantic Testing Laboratories, Ltd.

Conducted By TAseddoe All personnel present (Contr) 3
(Sub)
(Govt)

Subjects discussed (Note, delete, or add):
EM 385-1-1, Section:

✓ Accident Prevention Plan

✓ Individual Protective Equipment - steel toed shoes

✓ Prevention of Falls - proper balance — look before you leap on rip rap

✓ Back Injury, Safe Lifting Techniques -

Fire Prevention -

Sanitation, First Aid, Waste Disposal -

✓ Tripping Hazards - trash, hose, nails in lumber - watch footing on platform

✓ Staging, Ladders, Concrete Forms, Safety Nets - inspect condition of platform often

Hand Tools, Portable Power Tools, Woodworking Machinery -

Equipment Inspection & Maintenance (Zero Defects) -

✓ Hoisting Equipment -

✓ Ropes, Hooks, Chains and Slings - cathead rope replaced 8/14/86

Electrical Grounding, Temporary Wiring, GFCI -

Lockouts for safe clearance procedures - electrical, pressure, moving parts -

Welding, Cutting -

Excavations -

✓ Loose Rock and Steep Slopes - rip rap slope

Explosives -

Water Safety -

Toxic materials - hazards, MSDS, respiratory, ventilation -

Other -

Prepared by TAseddoe Title Geol.

2. Forwarded.

Signature Theresa A. Beddoe
Resident Engineer

CF: EXPOSURE HOURS:
Work Date: 8/11 - 8/15
Non-work Date: 8/10, 8/16

Man Hours:
Contr: 128
Subcontr: 1
Govt: 0
TOTAL: 129

NED FL APR 82 251

WEEKLY SAFETY MEETING

NEDSO

Date held 24 Aug 84

THRU: Area Engineer, New England Area

Time 1:00-1:30

TO: Safety Office, NED

Report No. CD017

1. Weekly safety meeting was held this date for the following personnel:

Contract No. /D.O.No. 0014 Contractor Atlantic Testing Laboratories, Ltd.

Conducted By TABeddoe

All personnel present (Contr) 5
(Sub) 0
(Govt) 0

Subjects discussed (Note, delete, or add):
EM 385-1-1, Section: _____

✓ Accident Prevention Plan

✓ Individual Protective Equipment - gloves, hardhats

✓ Prevention of Falls -

✓ Back Injury, Safe Lifting Techniques -

Fire Prevention -

✓ Sanitation, First Aid, Waste Disposal - Kit

✓ Tripping Hazards - trash, hose, nails in lumber - casing placement on slope

✓ Staging, Ladders, Concrete Forms, Safety Nets -

Hand Tools, Portable Power Tools, Woodworking Machinery -

Equipment Inspection & Maintenance (Zero Defects) -

Hoisting Equipment -

✓ Ropes, Hooks, Chains and Slings - cathead rope replaced 25 Aug

Electrical Grounding, Temporary Wiring, GFCI -

Lockouts for safe clearance procedures - electrical, pressure, moving parts -

Welding, Cutting -

Excavations -

✓ Loose Rock and Steep Slopes - footing on side of dam

Explosives -

Water Safety -

Toxic materials - hazards, MSDS, respiratory, ventilation -

Other -

Prepared by TABeddoe Title Geol.

2. Forwarded.

Signature Theresa A. Beddoe
Resident Engineer

CF: EXPOSURE HOURS:
Work Date: 8/18, 8/19, 8/20, 8/21, 8/22
Non-work Date: 8/19, 8/23

Man Hours:
Contr: 135.5
Subcontr: 1.5
Govt: 7.5
TOTAL: 144.5

NED FL APR 82 251

WEEKLY SAFETY MEETING

NEDSO

Date held 3 Sept 86

THRU: Area Engineer, New England Area

Time 12:30

TO: Safety Office, NED

Report No. CD017

1. Weekly safety meeting was held this date for the following personnel:

Contract No. /D.O.No. 0014

Contractor Atlantic Testing Laboratories, Ltd.

Conducted By D. Ferris

All personnel present (Contr) 5
(Sub)
(Govt)

Subjects discussed (Note, delete, or add):
EM 385-1-1, Section:

✓ Accident Prevention Plan

✓ Individual Protective Equipment -

✓ Prevention of Falls -

Back Injury, Safe Lifting Techniques -

Fire Prevention -

Sanitation, First Aid, Waste Disposal -

✓ Tripping Hazards - trash, hose, nails in lumber -

Staging, Ladders, Concrete Forms, Safety Nets -

Hand Tools, Portable Power Tools, Woodworking Machinery -

✓ Equipment Inspection & Maintenance (Zero Defects) - Hydraulic oil leaks

Hoisting Equipment -

Ropes, Hooks, Chains and Slings -

Electrical Grounding, Temporary Wiring, GFCI -

Lockouts for safe clearance procedures - electrical, pressure, moving parts -

Welding, Cutting -

Excavations -

✓ Loose Rock and Steep Slopes -

Explosives -

Water Safety -

Toxic materials - hazards, MSDS, respiratory, ventilation -

Other - general discussion on accidents.

Prepared by D. Ferris Title Engineer

2. Forwarded.

Signature Theresa A. Beddoe
Resident Engineer

CF: EXPOSURE HOURS:
Work Date: 8/25, 8/26, 8/27, 8/28, 8/29
Non-work Date: 8/24, 8/30

Man Hours:
Contr: 201
Subcontr: 1/2
Govt:

NED FL APP PZ 251

WEEKLY SAFETY MEETING

NEDSO

Date held 9 Sep 86

THRU: Area Engineer, New England Area

Time 12:30

TO: Safety Office, NED

Report No. CD017

1. Weekly safety meeting was held this date for the following personnel:

Contract No. /D.O.No. 0014 Contractor Atlantic Testing Laboratories, Ltd.

Conducted By D. Ferris All personnel present (Contr) 4
(Sub) ____
(Govt) ____

Subjects discussed (Note, delete, or add):
EM 385-1-1, Section: ____

Accident Prevention Plan

✓ Individual Protective Equipment -

Prevention of Falls -

Back Injury, Safe Lifting Techniques -

Fire Prevention -

Sanitation, First Aid, Waste Disposal -

Tripping Hazards - trash, hose, nails in lumber -

Staging, Ladders, Concrete Forms, Safety Nets -

Hand Tools, Portable Power Tools, Woodworking Machinery -

Equipment Inspection & Maintenance (Zero Defects) -

✓ Hoisting Equipment -

✓ Ropes, Hooks, Chains and Slings -

Electrical Grounding, Temporary Wiring, GFCI -

Lockouts for safe clearance procedures - electrical, pressure, moving parts -

Welding, Cutting -

Excavations -

Loose Rock and Steep Slopes -

Explosives -

Water Safety -

Toxic materials - hazards, MSDS, respiratory, ventilation -

Other - Discussed precautions to be used in cold weather as fall/winter approach at site. Prepared by D. Ferris Title Engineer

2. Forwarded.

Signature Douglas Roger Ferris
Resident Engineer

CF: EXPOSURE HOURS:
Work Date: 9/2, 9/3, 9/4, 9/5
Non-work Date: 8/31, 9/1, 9/6

Man Hours:
Contr: 180
Subcontr: 2
Govt: ____

NED FL APP FZ 251

WEEKLY SAFETY MEETING

NEDSO

Date held 16 Sept 86

THRU: Area Engineer, New England Area

Time 12:00

TO: Safety Office, NED

Report No. CD017

1. Weekly safety meeting was held this date for the following personnel:

Contract No. /D.O.No.

Contractor Atlantic Testing Laboratories, Ltd.

Conducted By TMBeddoe

All personnel present (Contr) 4
(Sub)
(Govt)

Subjects discussed (Note, delete, or add):
EM 385-1-1, Section:

✓ Accident Prevention Plan

✓ Individual Protective Equipment - safety-toed shoes should be worn by everyone

✓ Prevention of Falls - on rock slope

✓ Back Injury, Safe Lifting Techniques -

✓ Fire Prevention - note location of extinguisher

Sanitation, First Aid, Waste Disposal -

✓ Tripping Hazards - trash, hose, nails in lumber -

✓ Staging, Ladders, Concrete Forms, Safety Nets -

Hand Tools, Portable Power Tools, Woodworking Machinery -

Equipment Inspection & Maintenance (Zero Defects) -

Hoisting Equipment -

✓ Ropes, Hooks, Chains and Slings - zero defects

Electrical Grounding, Temporary Wiring, GFCI -

Lockouts for safe clearance procedures - electrical, pressure, moving parts -

Welding, Cutting -

Excavations -

✓ Loose Rock and Steep Slopes -

Explosives -

Water Safety -

Toxic materials - hazards, MSDS, respiratory, ventilation -

Other -

Prepared by TMBeddoe Title Geologist

2. Forwarded.

Signature Theresa A. Beddoe
Resident Engineer

CF: EXPOSURE HOURS:
Work Date: 9/8, 9/9, 9/10, 9/11, 9/12
Non-work Date: 9/7, 9/13

Man Hours:
Contr: 198.0
Subcontr: 2.0
Govt: 0

NED FL APR 82 251

WEEKLY SAFETY MEETING

NEDSO

Date held 29 Sept 86

THRU: Area Engineer, New England Area

Time 1:00

TO: Safety Office, NED

Report No. CD017

1. Weekly safety meeting was held this date for the following personnel:

Contract No. /D.O.No. 014 Contractor Atlantic Testing Laboratories, Ltd.

Conducted By D. Ferris All personnel present (Contr) 4
(Sub)
(Govt)

Subjects discussed (Note, delete, or add):
EM 385-1-1, Section:

Accident Prevention Plan

✓ Individual Protective Equipment -

✓ Prevention of Falls -

Back Injury, Safe Lifting Techniques -

Fire Prevention -

Sanitation, First Aid, Waste Disposal -

✓ Tripping Hazards - trash, hose, nails in lumber -

Staging, Ladders, Concrete Forms, Safety Nets -

✓ Hand Tools, Portable Power Tools, Woodworking Machinery -

Equipment Inspection & Maintenance (Zero Defects) -

✓ Hoisting Equipment -

✓ Ropes, Hooks, Chains and Slings -

Electrical Grounding, Temporary Wiring, GFCI -

Lockouts for safe clearance procedures - electrical, pressure, moving parts -

Welding, Cutting -

Excavations -

✓ Loose Rock and Steep Slopes -

Explosives -

Water Safety -

Toxic materials - hazards, MSDS, respiratory, ventilation -

Other -

Prepared by D. Ferris Title Area Engineer

2. Forwarded.

Signature Douglas Roger Ferris
Resident Engineer

CF: EXPOSURE HOURS:
Work Date: 9/15, 9/16, 9/17, 9/18, 9/19
Non-work Date: 9/14, 9/20

Man Hours:
Contr: 195
Subcontr: 5
Govt:

NED FL APR 82 251

WEEKLY SAFETY MEETING

NEDSO

Date held 1 Oct 86

THRU: Area Engineer, New England Area

Time _____

TO: Safety Office, NED

Report No. CD017

1. Weekly safety meeting was held this date for the following personnel:

Contract No. /D.O.No. 014 Contractor Atlantic Testing Laboratories, Ltd.

Conducted By _____ All personnel present (Contr) _____
(Sub) _____
(Govt) _____

Subjects discussed (Note, delete, or add):
EM 385-1-1, Section: _____

Accident Prevention Plan

Individual Protective Equipment -

Prevention of Falls -

Back Injury, Safe Lifting Techniques -

Fire Prevention -

Sanitation, First Aid, Waste Disposal -

Tripping Hazards - trash, hose, nails in lumber -

Staging, Ladders, Concrete Forms, Safety Nets -

Hand Tools, Portable Power Tools, Woodworking Machinery -

Equipment Inspection & Maintenance (Zero Defects) -

Hoisting Equipment -

Ropes, Hooks, Chains and Slings -

Electrical Grounding, Temporary Wiring, GFCI -

Lockouts for safe clearance procedures - electrical, pressure, moving parts -

Welding, Cutting -

Excavations -

Loose Rock and Steep Slopes -

Explosives -

Water Safety -

Toxic materials - hazards, MSDS, respiratory, ventilation -

Other -

Prepared by TABeddoe Title Staff Hydrogeologist

2. Forwarded.

Signature Theresa A. Beddoe
Resident Engineer

CF: EXPOSURE HOURS:
Work Date: 9/22, 9/23, 9/24, 9/25, 9/26
Non-work Date: 9/21, 9/27

Man Hours:
Contr: 212.0
Subcontr: 6.0
Govt: _____

NED APR FL 82 251

SECTION 8

BORING LOGS

a. Figure 1 - General Project Map

FIGURE 1

GENERAL PROJECT MAP

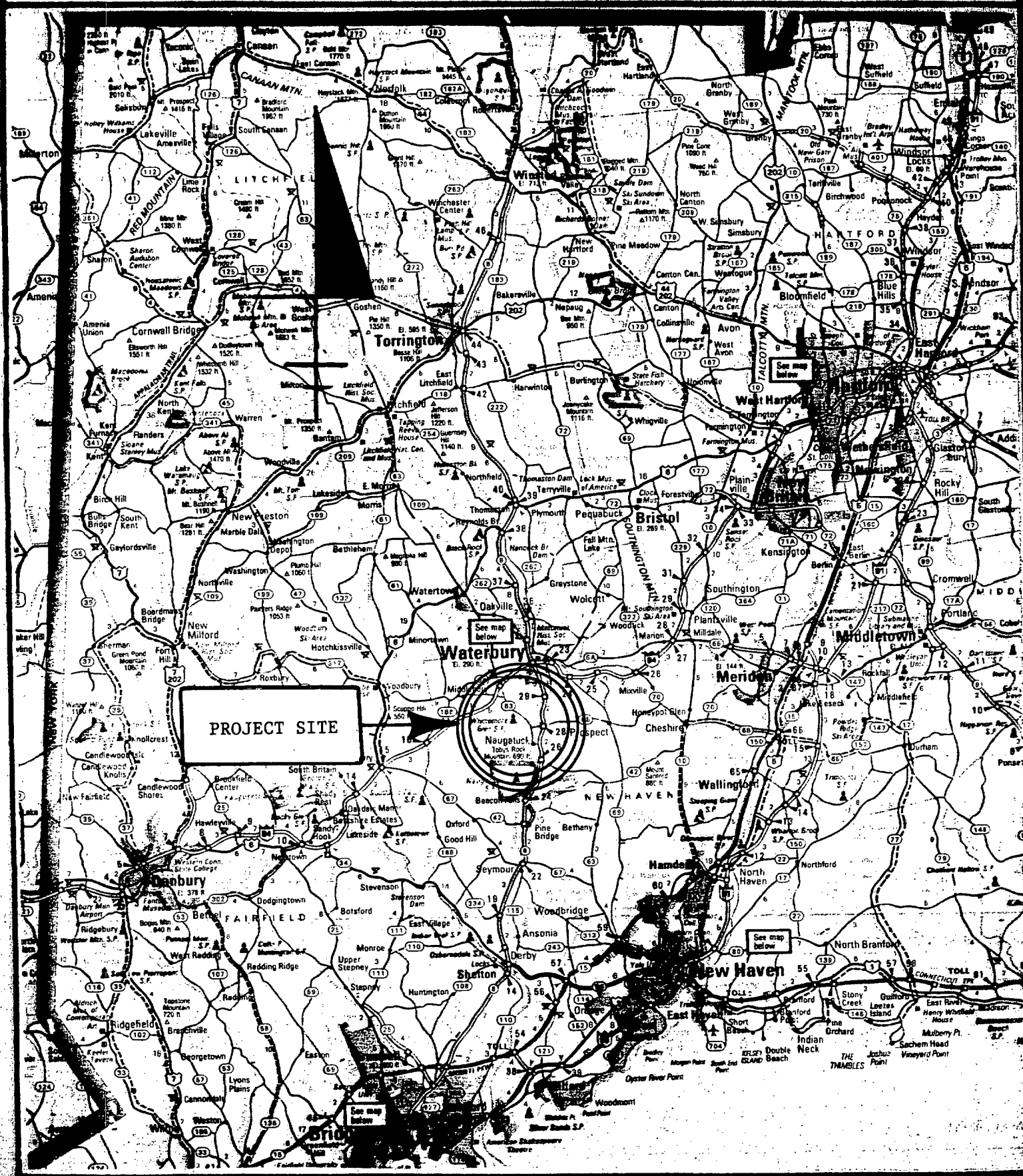

PROJECT No CD017	***SCALE:*** 1" = 7 miles	CONNECTICUT

b. Figure 2 - Site Location Map

FIGURE 2

SITE LOCATION MAP

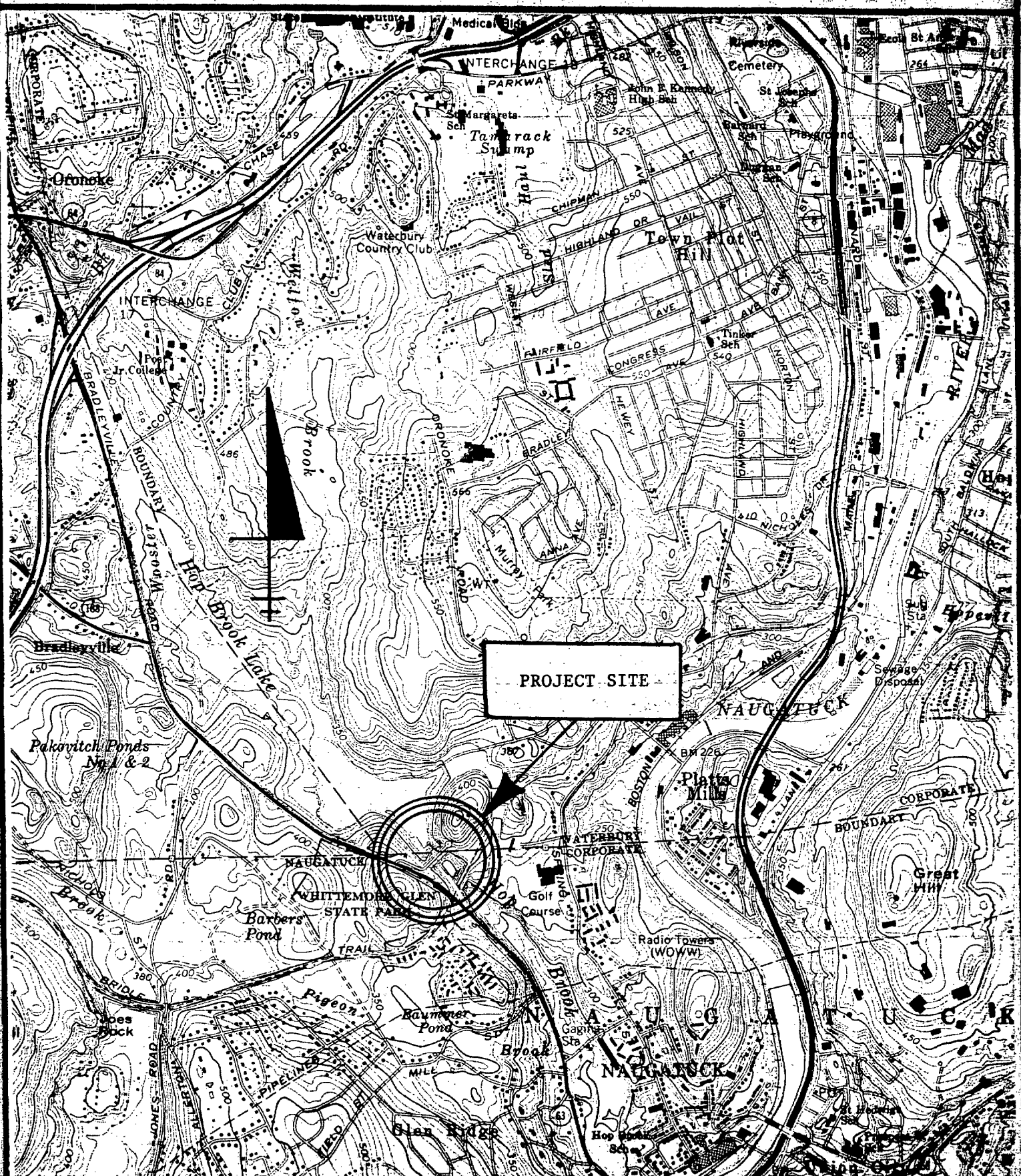

PROJECT No CD017	***SCALE:*** 1:24,000	***U.S.G.S. QUAD:*** WATERBURY, CONN.

c. **Figure 3 - Boring Location Plan**

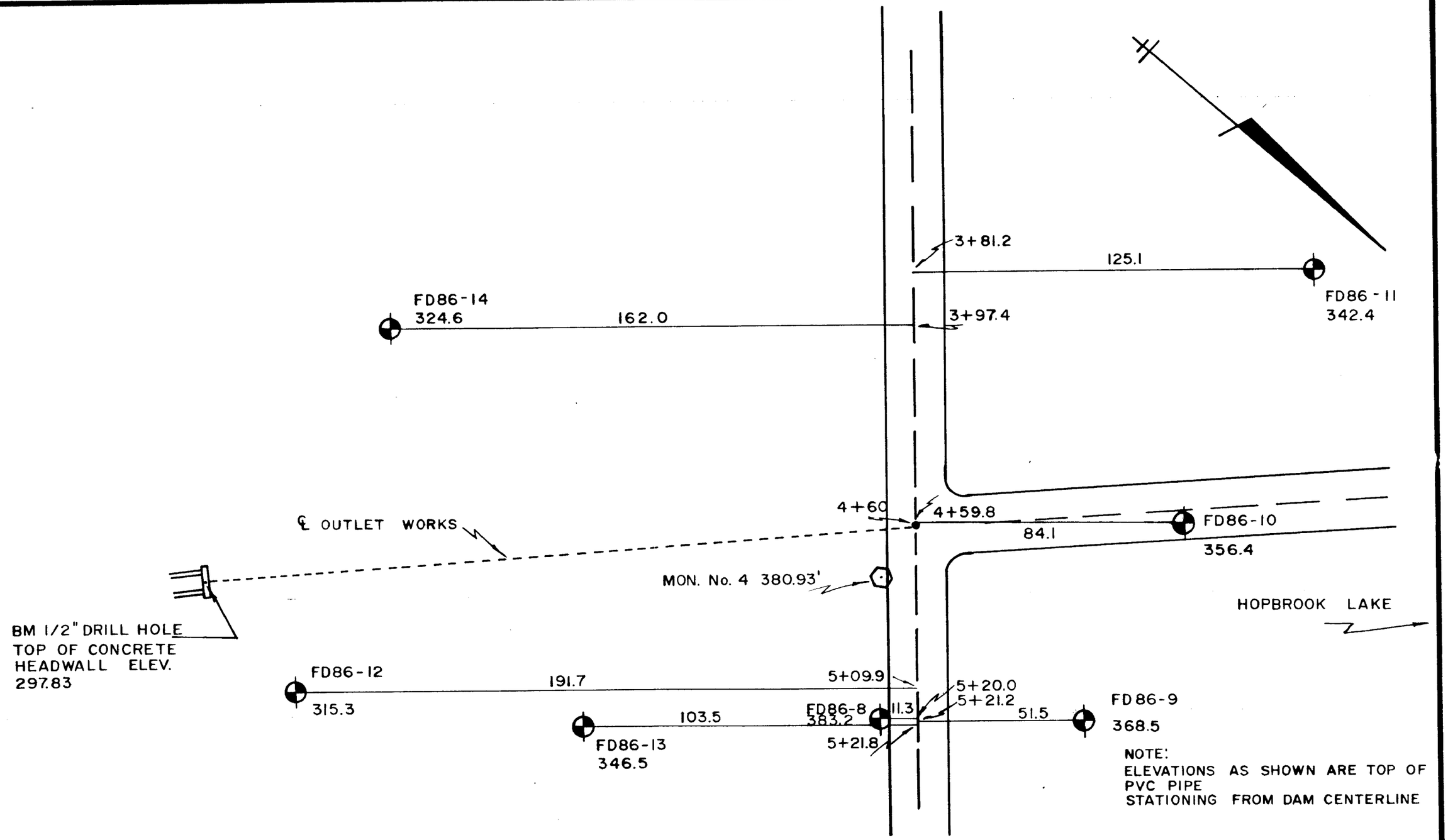

CONTRACT No.
DACW 33-85-D-0011
DELIVERY ORDER No. 0014

BY	REVISION	DATE

BORING LOCATION S
HOPBROOK DAM
HOPBROOK LAKE, CONN.

PROJECT NUMBER
CD-017-8-86

DATE
10-08-86

SCALE
1" = 30'

ATLANTIC TESTING LABORATORIES, Limited
P.O. BOX 29, CANTON, NEW YORK (315) 386-4578
CICERO, N.Y. ENDICOTT, N.Y. BURLINGTON, VT. MANCHESTER, N.H.

d. Boring Logs

CORPS OF ENGINEERS, U. S. ARMY
NEW ENGLAND DIVISION
FOUNDATION AND MATERIALS BRANCH

FIELD LOG OF TEST BORING

PROJECT NO. D.O.#14

Site Hop Brook Dam, CT

Page 1 of 14 Pages

Hole No. FD86-8 Diam. (Casing) 4"

Boring Started 6 Aug 86

Co-ordinates: ~~X~~ STA 5+20 ~~Y~~ OFF 11' D/S

Boring Completed 13 Aug 86

Drilled by Todd & Saarinen

Report Submitted 10 Oct 86

Purpose of Exploration install piezometers to determine hydrologic characteristics of foundation of dam

Elevation Top of Hole 380.4 M.S.L.

Total Overburden Drilled 54.0 Feet

Elevation Top of Rock 326.4 M.S.L.

Elevation Bottom of Hole 282.9 M.S.L.

Total Rock Drilled 43.5 Feet

Total Depth of Hole 97.5 Feet

Core Recovered 97 %

Core Recovered 41.35 Ft.: — Diam. 2 1/8 In.

Soil Samples 2 3/8 In. Diam. 7 No.

Soil Samples — In. Diam. — No.

Casing Left in Place 10 Total Feet
3.7' Stickup

Water Table Depth 60.0 Feet

Depth From	Depth To	Method of Drilling and Type of Bit Used
0.0	10.0	3 1/4" ID Hollow Stem Auger
10.0	20.0	3 7/8" OD roller bit followed by 4" spun casing, using clear mud
20.0	55.0	3 7/8" OD roller bit followed by 4" driven casing, using clear mud
55.0	97.5	NX diamond core using water (2 1/8" ID)

INDEX

Ground Water ~~Back of~~ Page 12,13
Boring Location Sketch ~~Back of~~ Page 12
Overburden Record Page 2-5
Rock Drilling Page 5-10
Piezometer Install. Report Page 11
Monitoring Well Install. Detail Page 14
Page

Prepared by Theresa A. Beddoe
Field Data — Lab. Data

Submitted by Atlantic Testing Labs, Ltd.

NED FORM DEC 63 121

REPLACES EDITION OF JUN 51 WHICH MAY BE USED UNTIL EXHAUSTED

U.S. ARMY
CORPS OF ENGINEERS
NEW ENGLAND DIVISION

FIELD LOG OF TEST BORING

Site Hop Brook Dam, CT — Page 2 of 14 Pages

Boring No. FD86-8 Desig. B Diam. (Casing) 4"

Co-ordinates: N STA 5+20 E OFF 11' D/S

Elevation Top of Boring 380.9 M.S.L. — Hammer Wt. 300# — Boring Started 6 Aug 86

Total Overburden Drilled 54.0 Feet — Hammer Drop 18" — Boring Completed 13 Aug 86

Elevation Top of Rock 326.4 M.S.L. — Casing Left 10', 3"

Total Rock Drilled 43.5 Feet — Subsurface Water Data _____ Page 12

Elevation Bottom of Boring 282.9 M.S.L. — Obs. Well 3/4"

Total Depth of Boring 97.5 Feet — Drilled By Todd + Saarinen

Core Recovered 97 % — No. Boxes 3 — Mfg. Des. Drill skid-mounted CME 45

Core Recovered 41.35 Ft. — Diam. 2 1/8 in. — Inspected By: TABeddoe

Soil Samples 2 3/8 in. Diam. 7 No. — Classification By: TABeddoe

Soil Samples — in. Diam. — No. — Classification By: —

DEPTH		CORE/SAMPLE NO.	SIZE	DEPTH RANGE	BLOWS PER FT. / CORE RECVY	6" SAMPLING AND CORING OPERATIONS	CLASSIFICATION OF MATERIALS
0	1" 2'			Rec		3 1/4" ID hollow stem auger 5'. Augering difficult due to cobbles. Sample using 2 3/8" ID Split Spoon Sampler	
5.0							
6.5		S-1	2 3/8"	0 2	15 18 23		No Recovery - suspect cmf SAND and GRAVEL from grab sample
10.0					-	3 1/4" ID hollow stem auger to 10'.	

GENERAL REMARKS:
elevations as surveyed by ATL, L
piezometer tip set at 96.0'

Site	Boring No.	Page 3 of 14
Hop Brook Dam, CT	FD86-8	

DEPTH 10'	1" = 2'	CORE/SAMPLE NO.	SIZE	~~DEPTH RANGE~~ REC	BLOWS PER 6" ~~CORE RECVT~~	SAMPLING AND CORING OPERATIONS	CLASSIFICATION OF MATERIALS
		S-2	2 3/8"	100%	20 27 84	Sample using 2 3/8" ID Split Spoon Sampler	Med brown c-m-f SAND, some c-m-f GRAVEL, trace SILT (moist, nonplastic) med. dense SP
11.5						Remove augers Spin 4" casing to 10' wet rotary drilling, 3 7/8" OD, to 15' (using clear mud)	
15.0		S-3	2 3/8"	80%	24 32 61	Sample	Similar Soils - SP
16.5						Spin casing to 15' wet rotary drilling to 20.0'	
20.0		S-4	2 3/8"	65%	33 60 79	Sample	Similar Soils - SP
21.5						Spin casing to 20' wet Rotary drilling to 25.0'	
25.0						Sample (Note spoon bouncing on cobble)	Similar Soils (saturated) SP
25.5		S-5	2 3/8"	30%	21		Boulder
27.0						Drive 4" casing to 25' using 300# hammer	

Site	Boring No.	Page 4 of 14
Hop Brook Dam, CT	FD86-8	

DEPTH		CORE/SAMPLE NO.	SIZE	DEPTH RAND REC	BLOWS PER 6" / CORE RECVY	6" SAMPLING AND CORING OPERATIONS	CLASSIFICATION OF MATERIALS
27.0	1" 2'						
				REC		wet rotary drilling using clear mud to 30'	(3 7/8" OD)
						Sample using 2 3/8" ID split spoon sampler	
30.0							
30.7		S-6	2 3/8"	0%	44 100/0.7"	note spoon bouncing on cobble end of explorations 8/6/86	No Recovery
						explorations continue 8/7/86 drive 4" casing to 30' using 300# hammer	
35.0						drill to 35'	
36.5		S-7	2 3/8"	90%	75 100 57	Sample	Med grey-brown Similar Soils (wet) SP
						drive casing to 35'	
40.0						drill to 40'	
41.5		S-8	2 3/8"	85%	67 89 87	Sample	Similar Soils (wet) SP
						drive casing to 40'	
44.0							

Site	Boring No.	Page 5 of 14
Hop Brook Dam, CT	FD86-8	

DEPTH		CORE/SAMPLE NO.	SIZE	DEPTH RUN	BLOWS PER 6" / CORE RECVY	6" SAMPLING AND CORING OPERATIONS	CLASSIFICATION OF MATERIALS
44.0	1" = 2'						
				12%		wet rotary drilling (3 7/8" OD) using clear Mud to 45'	
45.0							
		S-9	2 3/8	45%	72 / 100	Sample using 2 3/8" ID split spoon sampler (note spoon bouncing on cobble)	Similar Soils SP
46.0						Drive 4" casing to 45' using 300# hammer	
						drill to 50'	
50.0							
						Sample attempted, no penetration due to cobbles end of explorations 8/7/86	
						explorations continue 8/8/86	
54.0							
						wet rotary to 55.0, end of explorations 8/8/86	possible bedrock @ 54.0'
55.0						explorations continue 8/11/86 drive casing to 50', clean hole back down to 55' end of explorations 8/11/86	
						explorations continue 8/12/86	
		R-1	2 1/8"	85%		NX diamond core using water -coring operation rough	white/black gneiss strongly fractured, vertical seams yeilded mud to drill water 4 pieces numerous chips and fragments RQD = 0%
60.0							
61.0		R-2	2 1/8"	92%			

Site	Boring No.	Page 6 of 14
Hop Brook Dam, CT	FD86-8	

DEPTH		CORE/SAMPLE NO.	SIZE	DEPTH/RECOVERY (sec)	BLOWS PER 6" / CORE RECOVERY	6" SAMPLING AND CORING OPERATIONS	CLASSIFICATION OF MATERIALS
61'	1" = 2'						
		R-2	2 1/8"	92%		NX diamond core using water - coring operation rough	Similar rock, badly fractured and fragmented (muddy seams) 15 pieces numerous chips + fragments RQD = 7.5%
65'							Similar rock, badly fractured and fragmented (65'-67')
		R-3	2 1/8"	100%		NX diamond core using water - coring operation smoother	Similar rock, more coherant (67'-69.5') 14 pieces numerous chips and fragments RQD = 33%
69.5							garnetiferous gneiss, white to grey, unweathered 14 pieces 13 chips and fragments RQD = 63% Note fractures unaltered, rock clean
		R-4	2 1/8"	100%		Note steady water loss from Run 4 to boring termination (50% return)	
74.5							similar rock 18 pieces 6 chips and fragments RQD = 53% fractures unaltered, rock clean
		R-5	2 1/8"	100%			
78							

Site	Boring No.	Page 7 of 14
Hop Brook Dam, CT	FD86-8	

DEPTH 78'	1' 2'	CORE/SAMPLE NO.	SIZE	RECOVERY	BLOWS PER 6"	6" SAMPLING AND CORING OPERATIONS	CLASSIFICATION OF MATERIALS
						NX diamond core using water	
		R-5	2 1/8"	100%			
79.5						end of explorations 8/12/86 explorations continue 8/13/86	
		R-6	2 1/8"	100%			Similar Rock (more micaceous below 83' which results in more closely spaced fractures) 16 pieces 8 chips and fragments RQD = 67%
84.5						Note steady water loss to boring termination (50% return)	
		R-7	2 1/8"	100%			Similar Rock (more fractured 84.5-85.5, 87.0-89.5) 22 pieces numerous chips and fragments RQD = 25%
89.5							
		R-8	2 1/8"	100%			Similar Rock (less fractured, hard) 16 pieces 10 chips and fragments RQD = 68%
94.5							
95.0							

Site	Boring No.	Page 8 of 14
Hop Brook Dam, CT	FD86-8	

DEPTH		CORE/SAMPLE NO.	SIZE	~~DEPTH PROG.~~	BLOWS PER 6" / CORE RECVY	6" SAMPLING AND CORING OPERATIONS	CLASSIFICATION OF MATERIALS
96.0	1'=21	R-9	2 1/8"	PIECES 100%		NX diamond core using water	Similar Rock (hard) 13 pieces 7 chips & fragments RQD = 53 %
97.5						Boring Terminated @ 97.5 ft, 8/13/86 Piezometer Tip set at 96.0' 8/13/86	

FIELD LOG OF TEST BORING IN ROCK

SITE Hop Brook Dam, CT HOLE NO. FD86-8 PAGE 9 of 14

DATE	DEPTH FT. FROM	DEPTH FT. TO	RUN PT.	RUN REC'V'Y PT.	REC'V'Y %	DRILLING BEHAVIOR: FEED	DRILLING BEHAVIOR: WATER	DRILLING BEHAVIOR: REASON FOR PULL	ACTUAL DRILLING TIME	BIT NO. SIZE AND TYPE	ADDITIONAL REMARKS
8/12/86	55.0'	60.0'	5.0'	4.25'	85%	Medium	no loss of water	5' run	25 min	NX diamond	Run #1 - cored roughly - vertical seams and strongly fractured rock yielded mud in drilling water
8/12/86	60.0'	65.0'	5.0'	4.6'	92%	Medium	no loss of water	5' run	21 min	NX diamond	Run #2 - same comments hold as for Run #1
8/12/86	65.0'	69.5	4.5'	4.5'	100%	Medium	moderate loss of water at 67'	core barrel plugged	30 min	NX diamond	Run #3 - same comments for top 2.' of core - bottom 2.5' rock more coherent, less fractured
8/12/86	69.5	74.5	5.0'	5.0'	100%	Medium	steady loss of water throughout run	5' run	55 min	NX diamond	Run #4 - drilling slower - rock more coherent - wash water cloudy, no mud

TOTAL BED ROCK DRILLED 42.5 FEET

TOTAL BED ROCK RECOVERED 41.35 FEET

BED ROCK RECOVERY 97 PERCENT

DRILLER Todd + Saarinen

INSPECTOR T. Beddoe

NED FORM DEC 63 130

REPLACES EDITION OF APR 63 WHICH MAY BE USED UNTIL EXHAUSTED

FIELD LOG OF TEST BORING IN ROCK

SITE Hop Brook Dam CT ROLE NO. FD86-8 PAGE 10 of 14

DATE	DEPTH FT. FROM	DEPTH FT. TO	RUN FT.	RUN REC'V'Y FT.	REC'V'Y %	DRILLING BEHAVIOR: FEED	DRILLING BEHAVIOR: WATER	DRILLING BEHAVIOR: REASON FOR PULL	ACTUAL DRILLING TIME	BIT NO. SIZE AND TYPE	ADDITIONAL REMARKS
8/12/86	74.5	79.5	5.0	5.0	100%	medium	intermittent water loss	5' run	40 min	NX diamond	Run #5 comments as for Run #4
8/13/86	79.5	84.5	5.0	5.0	100%	medium	steady water loss (not full return - only partial)	5' run	35 min	NX diamond	Run #6 last foot drilled more slowly
8/13/86	84.5	89.5	5.0	5.0	100%	medium 84.5-86.5 light 86.5-89.5	steady water loss (same)	5' run	40 min	NX diamond	Run #7 use light feed last 3' to avoid problems with plugging
8/13/86	89.5	94.5	5.0	5.0	100%	medium	steady wtr loss	5' run	60 min	NX diamond	Run #8 better rock
8/13/86	94.5	97.5	3.0	3.0	100%	medium	steady water loss	end of footing	25 min	NX diamond	Run #9 hard drilling

TOTAL BED ROCK DRILLED 42.5 FEET

TOTAL BED ROCK RECOVERED 41.35 FEET

BED ROCK RECOVERY 97 PERCENT

DRILLER Todd & Sadinen

INSPECTOR TABeddoe

NED FORM 130 (Oct 61)

REPLACES EDITION OF APR 63 WHICH MAY BE USED UNTIL EXHAUSTED

PIEZOMETER INSTALLATION REPORT

PROJECT: Hop Brook Dam, CT | DATE: 8/13/86

LOCATION (STA): 5+20 | OFFSET FROM CENTER LINE: 11' D/S | PIEZ NO.: FD86-8

PIEZ TYPE: 1" ID x 2' Porous Plastic | DEPTH OF PIEZ: 96.0' | RISER PIPE DIAM: 3/4" Sch. 80

PIEZ TIP SET IN (SOIL TYPE): gneiss | ~~SOIL~~ ROCK SAMPLE NO.: R-9 | BORING DIAM: 3"

METHOD OF INSTALLATION: NX diamond coring through rock

TYPE OF PROTECTION FOR PIEZ: 10' long steel pipe (3" ID) | VENT: 1/8" hole in screw cap

GROUND ELEV.: 380.4' | ELEV. TOP OF RISER: 383.2' | ELEV PIEZ TIP: 284.4'

FILTER: #2 Sand | FROM ELEV: 282.9' | TO ELEV: 319.4'

SEAL: 3/8" bentonite pellets | FROM ELEV: 319.4' | TO ELEV: 326.9'

INSTALLED BY: Todd & Soarinen | CONTRACT NO.: DACW33-85-D-0011 | FOREMAN: T Beddoe

DATE OF INSTALLATION: 8/13/86 | DATE OF OBSERVATIONS: 8/19/86

METHOD OF TESTING PIEZ.: falling head test

TIME	ELAPSED TIME MINUTES	DEPTH TO WATER FEET *	TIME	ELAPSED TIME MINUTES	DEPTH TO WATER FEET	TIME	ELAPSED TIME MINUTES	DEPTH TO WATER FEET
	Before Test	60.7		30	59.89			
	0**	0.00						
	1	34.72						
	5	56.68						
	10	58.51						

REMARKS: * depth to water from top of PVC (2.8' stickup

** test began when water level at top of PVC

Theresa A. Beddoe
INSPECTOR

Site: Hop Brook Dam, CT
Boring No: FD86-8

SUBSURFACE WATER OBSERVATIONS

DATE	TIME	DEPTH-BOT. OF CASING	DEPTH-BOT. OF BORING	DEPTH TO WATER	ELEVATION WATER	REMARKS
8-12-86	7:40	50'	55'	12.05'	368.85'	
8-13-86	7:00	50'	79.5'	63.2	317.7'	
8-13-86	2:30	50'	97.5'	50.0	330.4	taken at completion
						of drilling before
						wtr level stabilized
8-14-86	8:30	40'	97.5	60.0'	320.4	taken after pulling
						10' casing
8-15-86	8:25	6.3'	97.5	60.0'	320.4	surface casing only
8/19/86	9:00	6.3'	97.5	57.9'	322.5	
8/21/86	8:15	6.3'	97.5	57.9'	322.5	
8/22/86	9:45	6.3'	97.5	57.4'	323.0	note steady rains the previous evening
8/26/86	7:15	6.3'	97.5	58.0	322.4	
8/27/86	7:00	6.3'	97.5	58.0	322.4	
8/28/86	7:30	6.3'	97.5'	58.5'	321.9	
8/29/86	7:45	6.3'	97.5'	59.1'	321.3	

Note: Depths are in feet below original ground (elev. 380.4') original
PVC has 2.8' stickup, casing 3.7' stickup above ground.

BORING LOCATION SKETCH (Not to Scale)

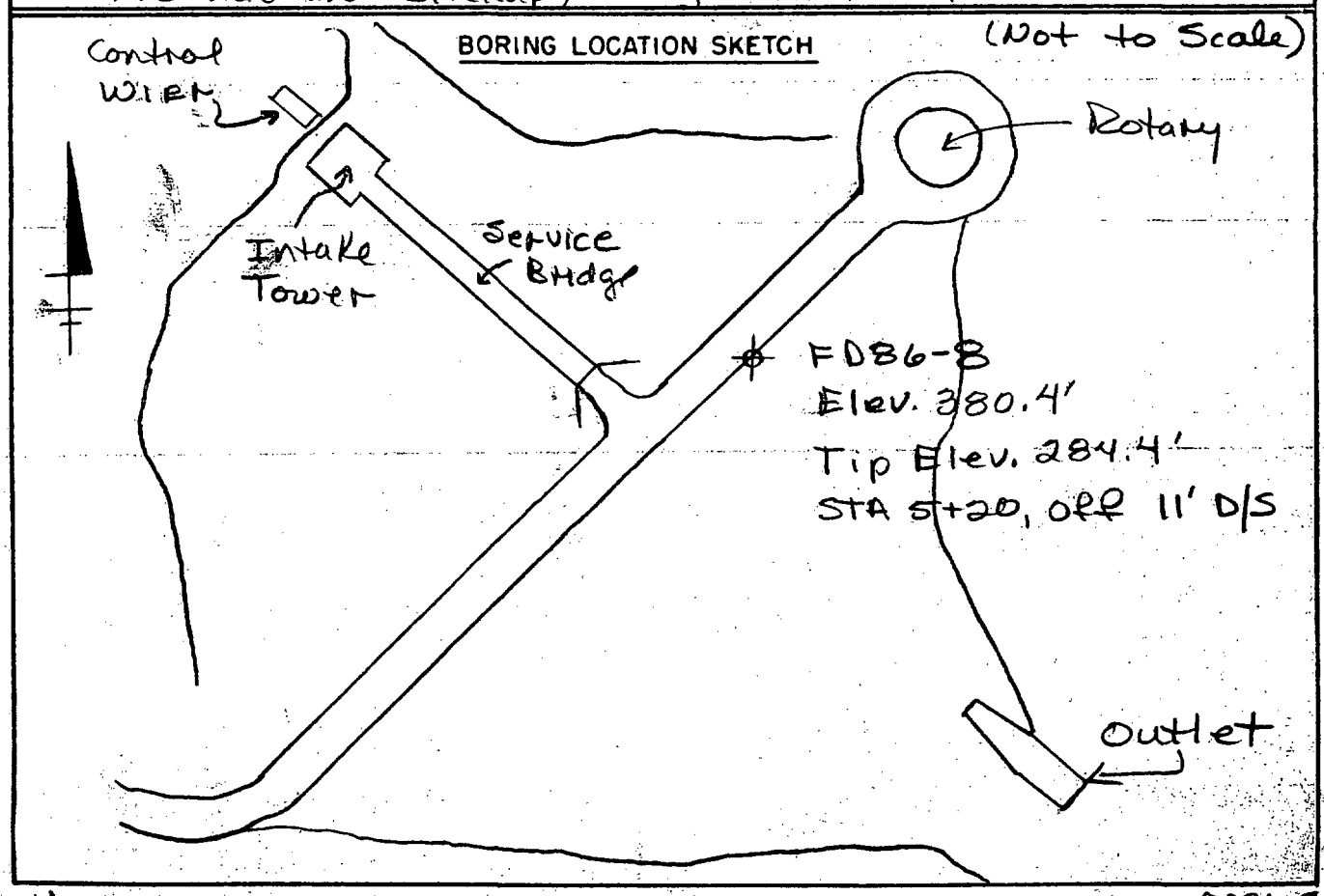

Site: Hop Brook Dam, CT
Boring No: FD86-8

SUBSURFACE WATER OBSERVATIONS

DATE	TIME	DEPTH-BOT. OF CASING	DEPTH-BOT. OF BORING	DEPTH TO WATER	ELEVATION WATER	REMARKS
9/2/86	10:30	6.3'	97.5'	61.0'	319.4	
9/3/86	7:10	6.3'	97.5'	61.4'	319.0	
9/4/86	7:00	6.3'	97.5'	61.9	318.5	
9/5/86	7:30	6.3'	97.5'	62.3	318.1	
9/9/86	7:30	6.3'	97.5'	63.6	316.8	
9/10/86	7:00	6.3'	97.5'	64.6	315.8	
9/11/86	7:05	6.3'	97.5'	64.8	315.6	
9/12/86	7:06	6.3'	97.5'	65.2	315.2	
9/15/86	1:20	6.3'	97.5'	66.4	314.0	
9/16/86	7:20	6.3'	97.5'	66.0	313.7	
9/17/86	8:10	6.3'	97.5'	66.9	313.5	
9/18/86	7:20	6.3'	97.5'	67.1	313.3	
9/19/86	7:00	6.3'	97.5'	67.2	313.2	
9/23/86	7:10	6.3'	97.5'	67.8	312.6	
9/24/86	3:00	6.3'	97.5'	68.1	312.3	
9/26/86	7:30	6.3'	97.5'	68.6	311.8	
9/29/86	13:55	6.3'	97.5'	68.7	311.7	
9/30/86	7:43	6.3'	97.5'	68.8	311.6	

Note: Depths are in feet below original ground (elev. 380.4')
PVC has 2.8' stick up, casing 3.7' stickup above original ground.

ATLANTIC TESTING LABORATORIES, LIMITED

MONITORING WELL INSTALLATION DETAIL

PROJECT: Hop Brook Dam, CT D.D. # 0014 **PROJECT NO.** CD017

CLIENT: USACE, NED **WELL NO.** FD86-8

Not to Scale

ELEVATION 384.1 top of pipe (3.7' stickup)
383.2 top of PVC (2.8' stickup)

SURFACE ELEVATION 380.4

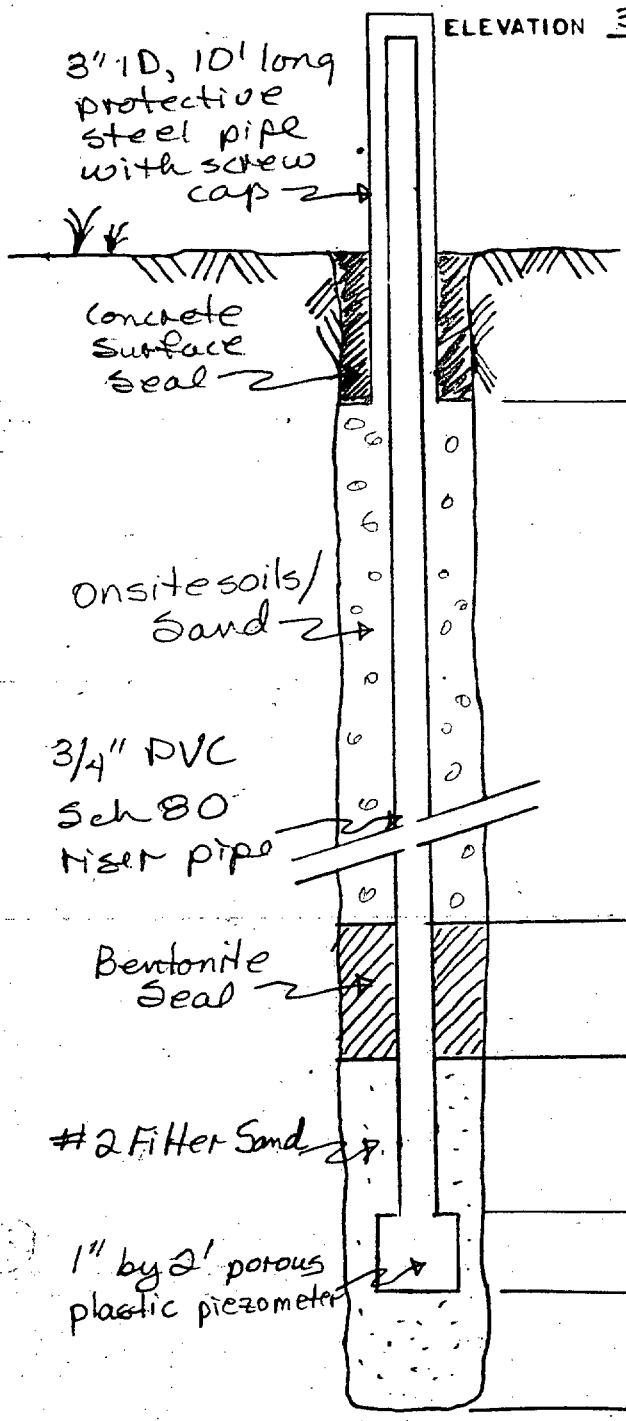

DEPTH	SOIL STRATA
6.3'	Gravelly SAND (with cobbles) SP
53.5'	
54.0'	BEDROCK (gneiss)
61'	
94.0'	
96.0'	
97.5'	

CORPS OF ENGINEERS, U. S. ARMY
NEW ENGLAND DIVISION
FOUNDATION AND MATERIALS BRANCH

FIELD LOG OF TEST BORING

PROJECT NO. D.O.#14

Site Hop Brook Dam, CT

Page 1 of 12 Pages

Hole No. FD86-9 Dim. (Casing) 4"

Boring Started 19 Aug 86

Co-ordinates: ~~N~~ STA 5+21 ~~E~~ OFF 52' U/S

Boring Completed 27 Aug 86

Drilled by Todd & Saamnen

Report Submitted 10 Oct 86

Purpose of Exploration install piezometers to determine hydrologic characteristics of foundation of dam

Elevation Top of Hole 365.5 M.S.L.

Total Overburden Drilled 43.0 Feet

Elevation Top of Rock 322.5 M.S.L.

Elevation Bottom of Hole 289.5 M.S.L.

Total Rock Drilled 33.0 Feet

Total Depth of Hole 76.0 Feet

Core Recovered 94 %

Core Recovered 30.0 Ft.: — Diam. 2⅛ In.

Soil Samples 2 3/8 In. Diam. 7 No.

Soil Samples — In. Diam. — No.

Casing Left in Place 10 Total Fe
3.0' Stickup

Water Table Depth 45.0'

Depth From	Depth To	Method of Drilling and Type of Bit Used
0.0	6.0	4⅝" OD diamond core using water
6.0	10.0	3⅜" wet rotary drilling using water
10.0	44.0	3⅜" wet rotary drilling using clear mud
44.0	76.0	2⅛" ID NX diamond core using water

INDEX

Ground Water — ~~Back of~~ Page 10
Boring Location Sketch — ~~Back of~~ Page 1
Overburden Record — Page 2
Rock Drilling — Page 5
Piezometer Install. Report — Page 9
Monitoring Well Install. Detail — Page 1
— Page

Prepared by Theresa A. Beddoe
Field Data

Lab. Data

Submitted by Atlantic Testing Labs, Ltd.

NED FORM DEC 63 121

REPLACES EDITION OF JUN 51 WHICH MAY BE USED UNTIL EXHAUSTED

U. S. ARMY
CORPS OF ENGINEERS
NEW ENGLAND DIVISION

FIELD LOG OF TEST BORING

Site Hop Brook Dam, CT — Page 2 of 12 Pages

Boring No. FD86-9 Desig. C Diam. (Casing) 4"

Co-ordinates: X STA 5+21 Y OFF 52' u/s

Elevation Top of Boring 365.5 M.S.L. — Hammer Wt. 300# — Boring Started 19 Aug 86

Total Overburden Drilled 43.0 Feet — Hammer Drop 18" — Boring Completed 27 Aug 86

Elevation Top of Rock 322.5 M.S.L. — Casing Left 10' 3"

Total Rock Drilled 33.0 Feet — Subsurface Water Data _____ Page 10

Elevation Bottom of Boring 289.5 M.S.L. — Obs. Well 3/4"

Total Depth of Boring 76.0 Feet — Drilled By Todd & Saarinen

Core Recovered 94 % No. Boxes 2 — Mfg. Des. Drill skid mounted CME45

Core Recovered 30.0 Ft. — Diam. 2 1/8 In. — Inspected By: TABeddoe

Soil Samples 2 3/8 In. Diam. 7 No. — Classification By: TABeddoe

Soil Samples — In. Diam. — No. — Classification By: —

DEPTH	CORE/SAMPLE NO.	SIZE	DEPTH RANGE	BLOWS PER FT. / CORE RECVY	6" SAMPLING AND CORING OPERATIONS	CLASSIFICATION OF MATERIALS
0					3.0" ID diamond core using water	boulder (gneiss) (no sample retained)
2.0						
3.0						assumed coarse gravel and cobbles (no sample retained)
						boulder (gneiss) (no sample retained)
5.0					end of explorations 8/19/86	
					explorations begin 8/20/86 core to 6.0 ft to ensure that we have passed boulder horizon.	breakthrough at 5.0 ft, into assumed cobbles + gravel (no sample retained)
6.0						
7.5	S-1	2 3/8"	75%	38 21 16	Sample using 2 3/8" ID split spoon sampler	Medium brown cmf SAND and cmf- GRAVEL, trace SILT (moist, nonplastic) moderately dense SP (contained 3 coarse gravel unable to fit into jar)
10.0					drive 4" casing to 10' using 300# hammer wet rotary drilling (3 7/8" OD) using water to 10'.	

GENERAL REMARKS:
elevations as surveyed by ATL, L
piezometer tip set at 75.0'

Site	Boring No.	Page 3 of 12
Hop Brook Dam, CT	FD86-9	

DEPTH		CORE/SAMPLE NO.	SIZE	DEPTH RANGE / CORE RECVY	BLOWS PER FT.	6" SAMPLING AND CORING OPERATIONS	CLASSIFICATION OF MATERIALS
10.0	1" = 2'	S-2A	2 3/8"	REC 70%	48	sample using 2 3/8" ID split spoon sampler	Med grey brown c-m-f SAND, tr SILT (wet, non pl) dense SP
11.5		S-2B	2 3/8"	70%	40 33		Med grey brown c-m-f SAND, some SILT, little c-m-f GRAVEL, (wet, nonpl) moderately dense SM
15.0						wet rotary drilling (3 7/8" OD) using clear mud to 15'	
16.5		S-3	2 3/8"	78%	68 61 44	Sample	Similar soils SM
20.0						wet rotary drilling to 20'	
21.5		S-4	2 3/8"	90%	29 46 40	Sample	Similar soils SM
25.0						wet rotary drilling to 25'	
26.2		S-5	2 3/8"		33 62 100/2"	Sample (bouncing refusal)	Medium brown Similar Soils SM
27.0						wet rotary drilling through cobbles to 30'	suspected cobbles, coarse gravel and sand - no sample taken

Site	Boring No.	Page 4 of 12
Hop Brook Dam, CT	FD86-9	

DEPTH		CORE/SAMPLE NO.	SIZE	DEPTH APPROC	BLOWS PER FT. CORE RECVY	6" SAMPLING AND CORING OPERATIONS	CLASSIFICATION OF MATERIALS
27.0	1" = 2'			REC		wet rotary drilling (3 7/8" OD) using clear mud to 30' (drilling difficult due to cobbles) drive 4" casing to 30' using 300# hammer	Suspected cobbles, coarse gravel and sand - no sample taken, only note brown cuttings in wash water
30.0						end of explorations 8/20/86 explorations continued 8/21/86 no sample attempted due to cobbles continue wet rotary drilling to 35'	
35.0							
35.3		S-6	2 3/8	20%	100/3"	sample using 2 3/8" ID split spoon sampler drill to 44'	2 pieces gneissic cm GRAVEL, trace cmf SAND, trace SILT (wet, non plastic) dense GD
40.0						no sample attempted due to cobbles and boulders	
44.0							probable bedrock @ 43.0'

Site	Boring No.	Page 5 of 12
Hop Brook Dam, CT	FD86-9	

DEPTH		CORE/SAMPLE NO	SIZE	DEPTH RUN / REC	BLOWS PER 6" / CORE REC'VY	6" SAMPLING AND CORING OPERATIONS	CLASSIFICATION OF MATERIALS
44.0	1" = 2'						
		R-1	2 1/8"	78%		After wet rotary drilling (3 7/8" OD) with clear mud to 44', drive 4" casing using 300# hammer to 37' where encounter refusal. Discover drive shoe was bent badly and would not let the roller bit through. Pull the casing to 2' End of explorations 8/21/86	White/black gneiss (weathered 44.0-46.0) 15 pieces 34 chips and fragments RQD = 19% note: hit several muddy seams - all fractures are altered (rust staining)
						Start of explorations 8/22/86 Pull remainder of casing through last boulder. Hole had caved to surface. End of explorations 8/22/86	
						Start of explorations 8/25/86 Drive 3" OD NW casing to 30' End of explorations 8/25/86	
49.0						Start of explorations 8/26/86 Drive NW casing to 44', cleaning out with 2 5/16" OD roller bit	
		R-2	2 1/8"	100%		NX diamond core using water, starting @ 44.0' Note no water loss	Similar Rock 17 pieces 24 chips and fragments RQD = 60% note: fractures altered (rust staining) for first 3 1/2' of run.
54.0							
		R-3	2 1/8"	94%			Similar rock 8 pieces 50 chips and fragments RQD = 34% note: vertical fractures entire length of run.
59.0							
		R-4	2 1/8"	92%			Similar rock 16 pieces 36 chips and fragments RQD = 60% Note: rock more coherent, harder
61.0							

Site: Hop Brook Dam, CT	Boring No. FD86-9	Page 6 of 12

DEPTH		CORE/SAMPLE NO.	SIZE	RECOVERY	BLOWS PER 6" / CORE RQD %	SAMPLING AND CORING OPERATIONS	CLASSIFICATION OF MATERIALS
61.0	1" = 2'						
		R-4	2⅛"	92%		NX diamond core using water; no water loss	
64.0							
		R-5	2⅛"	97%			Similar rock. 13 pieces 57 chips and fragments RQD = 37% Note: difficult drilling due to vertical and low angle fracturing.
69.0						End of explorations 8/26/86	
		R-6	2⅛"	100%		Start of explorations 8/27/86. NX diamond core using water; no water loss.	Similar rock 9 pieces 8 chips and fragments RQD ≅ 92% Note: rock more coherent; harder.
74.0							
		R-7	2⅛"	100%			Similar rock. 5 pieces 1 fragment RQD ≅ 92%
76.0							
78'						Boring terminated @ 96.0 ft; 8/29/86 Piezometer tip set at 75.0 ft; 8/27/86	

FIELD LOG OF TEST BORING IN ROCK

SITE Hop Brook Dam, CT HOLE NO. F086-9 PAGE 7 of 12

DATE	DEPTH FT. FROM	DEPTH FT. TO	RUN FT.	RUN REC'V'Y FT.	REC'V'Y %	DRILLING BEHAVIOR: FEED	DRILLING BEHAVIOR: WATER	DRILLING BEHAVIOR: REASON FOR PULL	ACTUAL DRILLING TIME	BIT NO. SIZE AND TYPE	ADDITIONAL REMARKS
8/26/86	44.0	49.0	5.0	3.9	78	medium	no water loss	5' run	40 min	NX diamond	Run # 1 - difficulty with plugging the last 8 inches - several muddy seams - all fractures are altered (rust staining) - top 2 feet of run is weathered
8/26/86	49.0	54.0	5.0	5.0	100	medium	no water loss	5' run	40 min	NX diamond	Run # 2 - difficulty with plugging the last 2' - mud seams for first foot, and in middle of run
8/26/86	54.0	59.0	5.0	4.7	94	medium	no water loss	5' run	45 min.	NX diamond	Run #3 - one muddy seam 1½' down (water bearing). - vertical seam entire length of run. Seam began in Run #2.

TOTAL BED ROCK DRILLED 32.0 FEET

TOTAL BED ROCK RECOVERED 30.0 FEET

BED ROCK RECOVERY 94 PERCENT

DRILLER Todd + Southern

INSPECTOR Beddoe

NED FORM DEC 130

REPLACES EDITION OF APR 63 WHICH MAY BE USED UNTIL EXHAUSTED

FIELD LOG OF TEST BORING IN ROCK

SITE Hop Brook Dam, CT ROLE NO. FD86-9 PAGE 8 of 12

DATE	DEPTH PT. FROM	DEPTH PT. TO	RUN PT.	RUN REC'V'Y PT.	REC'V'Y %	DRILLING BEHAVIOR: FEED	DRILLING BEHAVIOR: WATER	DRILLING BEHAVIOR: REASON FOR PULL	ACTUAL DRILLING TIME	BIT NO. SIZE AND TYPE	ADDITIONAL REMARKS
8/26/86	59.0	64.0	5.0	4.6	92	medium	no water loss	5' run	40 min	NX diamond	Run #4 - rock is more coherent, drills harder. - one muddy seam 2' down (iron staining)
8/26/86	64.0	69.0	5.0	4.8	97	medium	no water loss	5' run	45 min.	NX diamond	Run # 5 - difficult drilling due to vertical and low angle fractures.
8/27/86	69.0	74.0	5.0	5.0	100	medium	no water loss	5' run	45 min	NX diamond	Run # 6 - rock is more coherent, drills harder.
8/27/86	74.0	76.0	2.0	2.0	100	medium	no water loss	2' run	20 min.	NX diamond	Run # 7 - same as previous run.

TOTAL BED ROCK DRILLED 32.0 FEET

TOTAL BED ROCK RECOVERED 30.0 FEET

BED ROCK RECOVERY 94 PERCENT

DRILLER Todd + Sorensen

INSPECTOR Beddoe

NED FORM DEC 81 130

REPLACES EDITION OF APR 63 WHICH MAY BE USED UNTIL EXHAUSTED

PIEZOMETER INSTALLATION REPORT

PROJECT: CD017 Hop Brook Dam, CT | DATE: 8/27/86

LOCATION (STA): 5+21 | OFFSET FROM CENTER LINE: 52' U/S | PIEZ NO.: FD86-9

PIEZ TYPE: 1" ID x 2' Porous Plastic | DEPTH OF PIEZ: 75.0' | RISER PIPE DIAM: 3/4" Sch 80

PIEZ TIP SET IN (SOIL TYPE): gneiss | ~~SOIL~~ Rock SAMPLE NO.: R-7 | BORING DIAM: 3"

METHOD OF INSTALLATION: NX diamond coring through rock

TYPE OF PROTECTION FOR PIEZ: 10' long steel pipe (3" ID) | VENT: 1/8" hole in screw cap

GROUND ELEV.: 365.5 | ELEV. TOP OF RISER: 368.5 | ELEV PIEZ TIP: 290.5

FILTER: #2 Sand | FROM ELEV: 289.5 | TO ELEV: 319.0

SEAL: 3/8" Bentonite pellets | FROM ELEV: 319.0 | TO ELEV: 323.0

INSTALLED BY: Todd + Saarinen | CONTRACT NO.: DACW33-85-D-0011 | FOREMAN: Beddoe

DATE OF INSTALLATION: 8/27/86 | DATE OF OBSERVATIONS: 4 Sept 86

METHOD OF TESTING PIEZ.: falling head test

TIME	ELAPSED TIME MINUTES	DEPTH TO WATER FEET *	TIME	ELAPSED TIME MINUTES	DEPTH TO WATER FEET	TIME	ELAPSED TIME MINUTES	DEPTH TO WATER FEET
	Before Test	48.2		30	47.2			
	0 **	0.0						
	1	15.6						
	5	38.6						
	10	45.1						

REMARKS: * depth to water from top of PVC (3.0' stickup)

** test began with water level at top of PVC.

Theresa A. Beddoe
INSPECTOR

Site: Hop Brook Dam, CT
Boring No: FD86-9

SUBSURFACE WATER OBSERVATIONS

DATE	TIME	DEPTH-BOT. OF CASING	DEPTH-BOT. OF BORING	DEPTH TO WATER	ELEVATION WATER	REMARKS
8/27/86	7:30	44.0'	69.0'	41.9'	323.6'	boring not complete,
						reading taken @ start
						of drilling for the day
8/28/86	7:00	–	76.0'	43.9'	321.6'	Boring completed
8/29/86	8:00	7.0'	76.0'	44.3'	321.2'	
9/2/86	10:30	7.0'	76.0'	45.0'	320.5	
9/3/86	7:15	7.0'	76.0'	45.1'	320.4	
9/4/86	7:00	7.0'	76.0'	45.2'	320.3	
9/5/86	7:30	7.0'	76.0'	45.6'	319.9	
9/9/86	7:30	7.0'	76.0'	46.2'	319.3	
9/10/86	7:00	7.0'	76.0'	46.5'	319.0'	
9/11/86	7:10	7.0'	76.0'	46.8'	318.7'	
9/12/86	7:11	7.0'	76.0'	47.0'	318.5'	
9/15/86	1:20	7.0'	76.0'	47.9'	317.6'	
9/16/86	7:25	7.0'	76.0'	48.1'	317.4'	

Note: Depths are in feet below original ground (elev. 365.5)
PVC and casing have 3.0' stickup above ground.

BORING LOCATION SKETCH (Not to Scale)

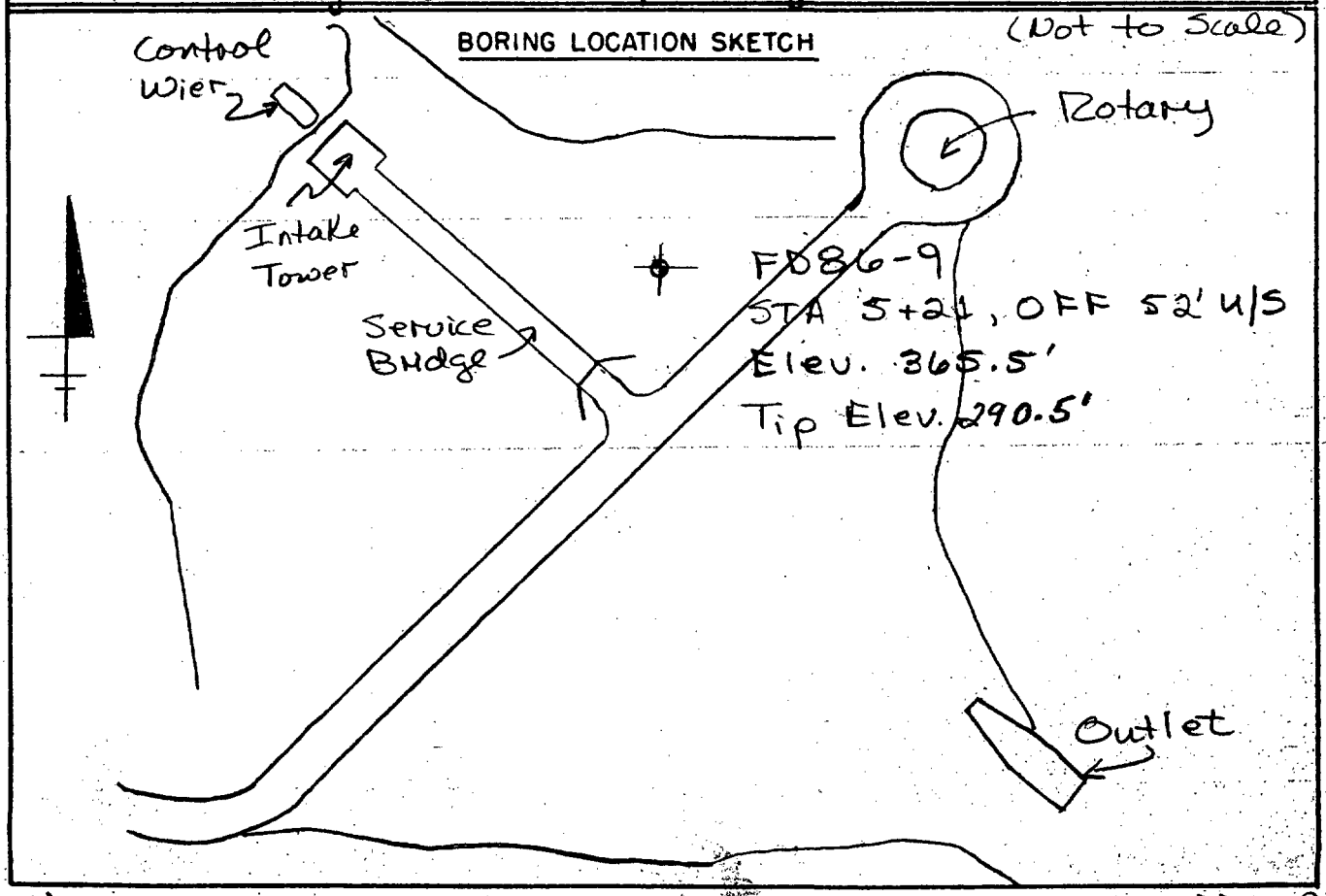

Site: Hop Brook Dam, CT
Boring No: FD86-9

SUBSURFACE WATER OBSERVATIONS

DATE	TIME	DEPTH-BOT. OF CASING	DEPTH-BOT. OF BORING	DEPTH TO WATER	ELEVATION WATER	REMARKS
9/17/86	8:15	7.0'	76.0'	48.4'	317.1'	
9/18/86	7:25	7.0'	76.0'	48.5'	317.0'	
9/19/86	7:05	7.0'	76.0'	48.6'	316.9'	
9/23/86	7:15	7.0'	76.0'	49.1'	316.4'	
9/24/86	3:05	7.0'	76.0'	49.3'	316.2'	
9/26/86	7:35	7.0'	76.0'	49.5'	316.0'	
9/29/86	13:18	7.0'	76.0'	49.5'	316.0'	
9/30/86	7:46	7.0'	76.0'	49.5'	316.0'	

Note: Depths are in feet below original ground (elev. 365.5')
PVC and casing have 3.0' stickup above ground.

ATLANTIC TESTING LABORATORIES, LIMITED

MONITORING WELL INSTALLATION DETAIL

PROJECT: Hop Brook Dam, CT DO. # 0014

PROJECT NO. CD017

CLIENT: USACE, NED

WELL NO. FD86-9

Not-to-scale

ELEVATION 368.5' top of pipe / PVC (3.0' stick up)

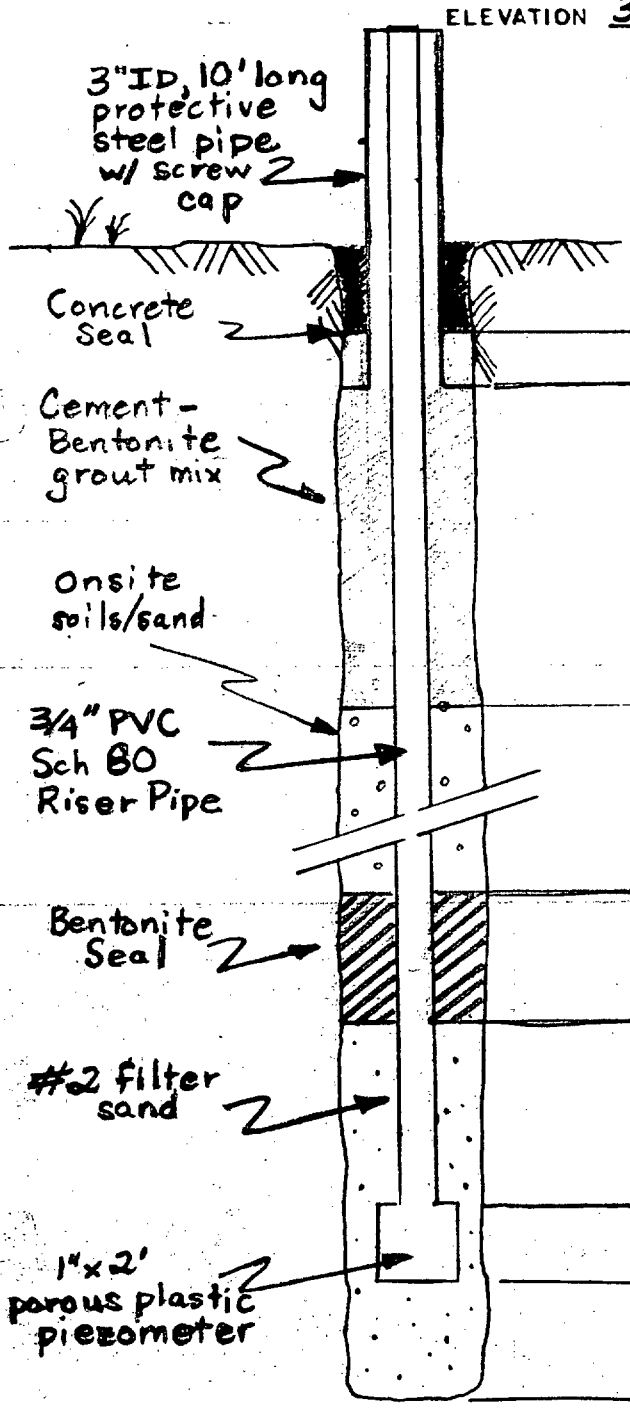

SURFACE ELEVATION 365.5'

DEPTH	SOIL STRATA
5.0'	Gravelly SAND (with cobbles) SP
7.0'	
10.5'	Silty SAND SM
26.2'	
26.8'	Sandy Gravel GP
42.5'	
43.0'	
46.5'	BEDROCK (gneiss)
73.0'	
75.0'	
76.0'	

CORPS OF ENGINEERS, U. S. ARMY
NEW ENGLAND DIVISION
FOUNDATION AND MATERIALS BRANCH

FIELD LOG OF TEST BORING

PROJECT NO. D.O. #14

Site Hop Brook Dam, CT — Page 1 of 9 Pages

Hole No. FD86-10 Diam. (Casing) 4" — Boring Started 28 Aug 86

Co-ordinates: STA 4+60 OFF 84' U/S — Boring Completed 4 Sept 86

Drilled by Todd, Saarinen, Cambridge — Report Submitted 10 Oct 86

Purpose of Exploration Install piezometers to determine hydrologic characteristics of dam.

Elevation Top of Hole 353.9 M.S.L.
Total Overburden Drilled 50.0 Feet
Elevation Top of Rock 303.9 M.S.L.
Elevation Bottom of Hole 295.9 M.S.L.
Total Rock Drilled 8.0 Feet
Total Depth of Hole 58.0 Feet
Core Recovered 95 %
Core Recovered 7.5 Ft.: — Diam. 2 1/8 in.
Soil Samples 2 3/8 in. Diam. 14 No.
Soil Samples — in. Diam. — No.

Casing Left in Place 10 Total Feet
2.7' stickup

Water Table Depth 48.4

Depth From	Depth To	Method of Drilling and Type of Bit Used
0	0.5	Removed boulders by hand
0.5	6.0	3.0" ID diamond core using water
6.0	21.5	3 7/8" OD roller bit using water
21.5	50.2	3 7/8" OD roller bit using clear mud
50.2	50.5	AX diamond core using water
50.5	58.0	NX diamond core using water

INDEX

Ground Water — ~~Back of~~ Page 8
Boring Location Sketch — ~~Back of~~ Page 8
Overburden Record — Page 2-5
Rock Drilling — Page 5-6
Piezometer installation report — Page 7
Monitoring Well installation detail — Page 9
— Page

Prepared by T A Beddoe — Field Data — Lab. Data

Submitted by Atlantic Testing Labs, Ltd.

NED FORM DEC 63 121 — REPLACES EDITION OF JUN 51 WHICH MAY BE USED UNTIL EXHAUSTED

U. S. ARMY
CORPS OF ENGINEERS
NEW ENGLAND DIVISION

FIELD LOG OF TEST BORING

Site Hop Brook Dam, CT Page 2 of 9 Pages
Boring No. ED86-10 Desig. E Diam. (Casing) 4"
Co-ordinates: STA 4+60 OFF 84' U/S

Elevation Top of Boring 353.9 M.S.L.
Total Overburden Drilled 50.0 Feet
Elevation Top of Rock 303.9 M.S.L.
Total Rock Drilled 8.0 Feet
Elevation Bottom of Boring 295.9 M.S.L.
Total Depth of Boring 58.0 Feet
Core Recovered 95 % No. Boxes 1
Core Recovered 7.1 Ft. — Diam. 2 1/8 in.
Soil Samples 2 3/8 in. Diam. 14 No.
Soil Samples — in. Diam. — No.

Hammer Wt. 300# Boring Started 28 Aug 86
Hammer Drop 18"
Casing Left 10', 3" Boring Completed 9/4/86
(Subsurface Water Data) (Page)
Obs. Well 3/4"
Drilled By Todd, Saarinen, Cambridge
Mfg. Des. Drill Skid mounted CME 45
Inspected By: T.A. Beddoe
Classification By: T.A. Beddoe
Classification By:

DEPTH 0	DEPTH 1" = 2'	CORE/SAMPLE NO.	SIZE	DEPTH RANGE / CORE RECOVERY	BLOWS PER 6"	SAMPLING AND CORING OPERATIONS	CLASSIFICATION OF MATERIALS
0.5				REC		Boulders removed by hand 0-0.5'	Boulder (gneiss) No sample retained
						3.0" ID diamond core using water	
3.5						End of explorations 8/28/86	Boulders/cobbles, no samples retained
						Explorations continue 8/29/86	
						Cored to 5' depth.	
5.0						End of explorations 8/29/86	
6.0						Explorations continue 9/2/86 core to 6'; breakthrough at 5.5'	
		S-1	2 3/8"	5%	9 6 9	Sample at 6.0' using 2 3/8" ID Split Spoon Sampler	Medium brown c-mft SAND, little SILT (saturated, nonplastic) loose SM
7.5						Drive 4" casing to 10' using 300# hammer	
						wet rotary drilling (3 7/8" OD) to 10' using water	
10.0							

GENERAL REMARKS:
Elevations as surveyed by ATL.

Site	Boring No.	Page 3 of 9
Hop Brook Dam, CT	FD86-10	

DEPTH		CORE/SAMPLE NO.	SIZE	~~DEPTH PER CORE~~ REC	~~BLOWS PER FT CORE RECOVERY~~	6" SAMPLING AND CORING OPERATIONS	CLASSIFICATION OF MATERIALS
10.0	1" 2'						
		S-2	2 3/8"	65%	28 29 28	Sample @ 10' using 2 3/8" ID Split Spoon Sampler	Brown-grey c-mf+ SAND, some SILT, trace m-f GRAVEL trace ORGANICS (wood) (wet, non plastic) mod. dense SM
11.5							
15.0						Wet rotary drilling (3 7/8" OD) to 15' using water Drive 4" casing to 15' using 300# hammer wash back down to 15' (hole caved)	
16.5		S-3	2 3/8"	70%	27 22 24	Sample	Similar Soils - SM (no organics)
20.0						Drill to 20'	Probable cobbles @ 17.5'
21.5		S-4	2 3/8"	55%	33 30 20	Sample Drive casing to 20.0' End of explorations 9/2/86	Similar Soils, with little c-mf GRAVEL - SM
25.0						Explorations continue 9/3/86 wet rotary drilling (3 7/8" OD) to 25' using clear Mud Drive casing to 25' Wash back down to 25' (wet rotary drilling with Clear Mud)	
26.5		S-5	2 3/8"	67%	30 54 38	Sample	Medium brown c-mf+ SAND, some c-m+f GRAVEL, trace SILT (wet, nonplastic) dense SP
27.0						Drill to 30'	

Site	Boring No.	Page 4 of 9
Hop Brook Dam, CT	FD86-10	

DEPTH		CORE/SAMPLE NO	SIZE	REC	BLOWS PER 6"	6" SAMPLING AND CORING OPERATIONS	CLASSIFICATION OF MATERIALS
27.0	1' 2'						
				REC		wet rotary drilling (3 7/8" OD) to 30' using clear Mud	
30.0							
31.25		S-6	2 3/8"	60%	26 99' 100/3"	Sample using 2 3/8" ID Split Spoon Sampler - note bouncing refusal	Similar Soil with little c-m+f GRAVEL SP
34.0						drive 4" casing to 30' using 300# hammer drill to 34'. (drilling difficult due to cobbles)	
34.75		S-7	2 3/8"	90%	77 100/3"	sample	Soils Similar to Sample S-5 - SP
36.0						Drill to 36.0'	
38.0		S-8	2 3/8"	65%	135 108 46 47	Sample (note change in density may be due to clear mud penetrating upper foot of sample - lower foot was not affected by clear mud).	Similar Soils - SP
40.0		S-9	2 3/8"	60%	31 53 48 50	Drill to 38' Sample Drill to 40'	Soils Similar to S-6 SP
42.0		S-10	2 3/8"	40%	32 24 22 27	Sample	Similar Soil with trace mf GRAVEL SP
44.0		S-11	2 3/8"	100%	20 17 25 52	Sample Drill to 44'	Similar Soil with little c-mf GRAVEL SP

Site: Hop Brook Dam, CT

Boring No. FD86-10

DEPTH	CORE/SAMPLE NO	SIZE	~~DEPTH/RUN~~ REC	~~BLOWS PER 6" / CORE RECOVERY~~	6" SAMPLING AND CORING OPERATIONS	CLASSIFICATION OF MATERIALS
44.0						
			REC	26	Sample using 2 3/8" ID split spoon sampler	Similar soils with some c m+f GRAVEL SP
				54		
	S-12	2 3/8"	80%	48		
				65	wet rotary drilling (3 7/8" OD) to 46.0' using clear mud	
46.0						
				35	Sample	Similar soils with little c-mf GRAVEL SP
	S-13	2 3/8"	75%	41		
				56		
				52	Drill to 48.0'	
48.0						
				26		Similar Soils SP
				27		
	S-14	2 3/8"	55%	17		
				37		
50.0					End of Explorations 9/3/86	
50.2	S-15	2 3/8"	0%	100/0"	Start of Explorations 9/4/86	Assumed bedrock at 50.0'
50.5					Drill to 50' Attempt sample at 50', note bouncing refusal, no penetration Drill to 50.2', verify solid material	
	R-1	2 1/8"	88%		AX diamond core using water 50.2-50.5 to verify bedrock as opposed to concrete conduit	White/black gneiss with few muddy seams 10 pieces 20 chips/fragments RQD ≅ 60%
					NX diamond core using water coring operation easy no water loss	
54.0						
	R-2	2 1/8"	100%			Similar rock 9 pieces 3 chips/fragments RQD ≅ 75%
58.0						
					Boring terminated at 58.0' 9/4/86 piezometer tip set at 57.0' 9/4/86	

FIELD LOG OF TEST BORING IN ROCK

SITE Hop Brook Dam, CT HOLE NO. FD86-10 PAGE 6 of 9

DATE	DEPTH FT. FROM	DEPTH FT. TO	RUN FT.	RUN REC'V'Y FT.	REC'V'Y %	DRILLING BEHAVIOR: FEED	DRILLING BEHAVIOR: WATER	DRILLING BEHAVIOR: REASON FOR PULL	ACTUAL DRILLING TIME	BIT NO. SIZE AND TYPE	ADDITIONAL REMARKS
9/4/86	50.5	54.0	3.5	3.1	88%	medium	no water loss	bottom of run desired @ 54.0'	35 min	NX diamond	Run #1 - noted a few mud seams - rock largely coherent - few altered seams
9/4/86	54.0	58.0	4.0	4.0	100%	medium	no water loss	4.0' run	45 min	NX diamond	Run #2 - rock coherent - few altered seams

TOTAL BED ROCK DRILLED 7.1 FEET

TOTAL BED ROCK RECOVERED 7.5 FEET

BED ROCK RECOVERY 95% PERCENT

DRILLER Todd + Cambridge

INSPECTOR TBeddoe

NED FORM DEC 63 130

REPLACES EDITION OF APR 67 WHICH MAY BE USED UNTIL EXHAUSTED

PIEZOMETER INSTALLATION REPORT

PROJECT: CD017 Hop Brook Dam, CT | DATE: 4 Sept 86

LOCATION (STA): 4+60 | OFFSET FROM CENTER LINE: 84' U/S | PIEZ NO.: FD86-10

PIEZ TYPE: 1" ID x 2' porous plastic | DEPTH OF PIEZ: 57.0' | RISER PIPE DIAM: 3/4" Sch 80

PIEZ TIP SET IN (SOIL TYPE): gneissic rock | SOIL SAMPLE NO.: R-2 | BORING DIAM: 3"

METHOD OF INSTALLATION: NX diamond core through rock

TYPE OF PROTECTION FOR PIEZ: 10' long steel pipe (3" ID) | VENT: 1/8" hole in screw cap

GROUND ELEV.: 353.9' | ELEV. TOP OF RISER: 356.5' | ELEV PIEZ TIP: 296.9'

FILTER: #2 Sand | FROM ELEV: 295.9' | TO ELEV: 314.9'

SEAL: 3/8" bentonite pellets | FROM ELEV: 314.9' | TO ELEV: 318.9'

INSTALLED BY: Todd, Saarinen, Cambridge | CONTRACT NO.: DACW33-85-D-0011 | FOREMAN: TABeddoe

DATE OF INSTALLATION: 4 Sept 86 | DATE OF OBSERVATIONS: 12 SEPT 86

METHOD OF TESTING PIEZ.: Falling Head Test

TIME	ELAPSED TIME MINUTES	DEPTH TO WATER FEET *	TIME	ELAPSED TIME MINUTES	DEPTH TO WATER FEET	TIME	ELAPSED TIME MINUTES	DEPTH TO WATER FEET
	Before test	51.0		30	50.4			
	0**	0						
	1	10.9						
	5	38.6						
	10	45.7						

REMARKS: * Depth to water from top of PVC (2.6' stickup)

** Test began with water level at top of PVC.

Theresa A. Beddoe
INSPECTOR

Site: Hop Brook Dam, CT
Boring No: FD86-10

SUBSURFACE WATER OBSERVATIONS

DATE	TIME	DEPTH-BOT. OF CASING	DEPTH-BOT. OF BORING	DEPTH TO WATER	ELEVATION WATER	REMARKS
9/12/86	7:16	7.3'	58.0'	48.4'	305.5'	
9/15/86	1:20	7.3'	58.0'	49.0'	304.9'	
9/16/86	7:30	7.3'	58.0'	49.1'	304.8'	
9/17/86	8:20	7.3'	58.0'	49.3'	304.6'	
9/18/86	7:30	7.3'	58.0'	49.3'	304.6'	
9/19/86	7:10	7.3'	58.0'	49.2'	304.7'	
9/23/86	7:20	7.3'	58.0'	49.4'	304.5'	
9/24/86	8:10	7.3'	58.0'	49.4'	304.5'	
9/26/86	7:40	7.3'	58.0'	49.4'	304.5'	
9/29/86	13:22	7.3'	58.0'	49.2'	304.7'	
9/30/86	7:50	7.3'	58.0'	49.2'	304.7'	

Note: Depths are in feet below original ground (elev. 353.9')
PVC has 2.6' stickup, casing 2.7' stickup above original ground.

BORING LOCATION SKETCH

Not-to-Scale

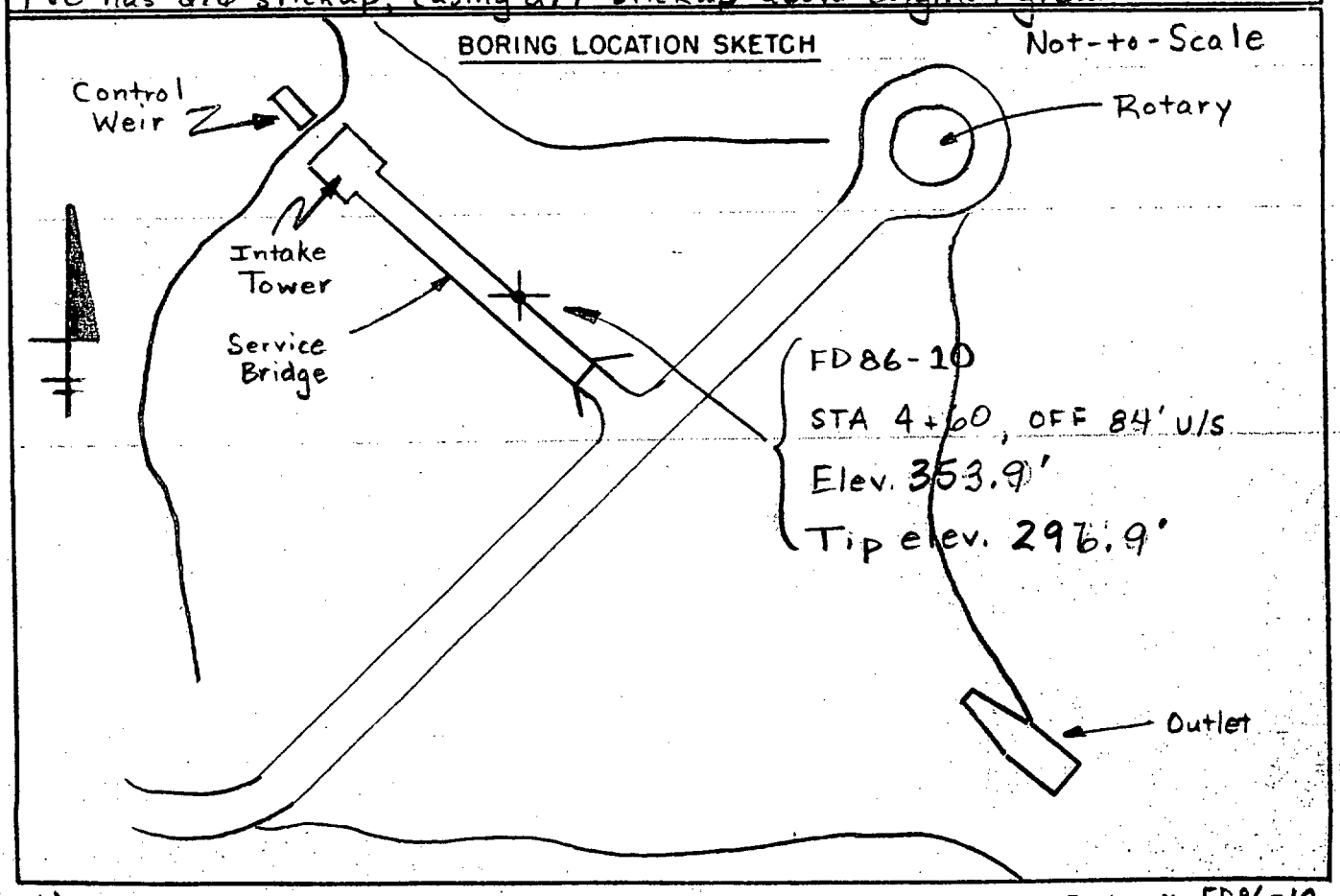

ATLANTIC TESTING LABORATORIES, LIMITED

MONITORING WELL INSTALLATION DETAIL

PROJECT: Hop Brook Dam, CT D.O.# 0014

PROJECT NO. CD017

CLIENT: USACE, NED

WELL NO. FD86-10

Not-to-scale

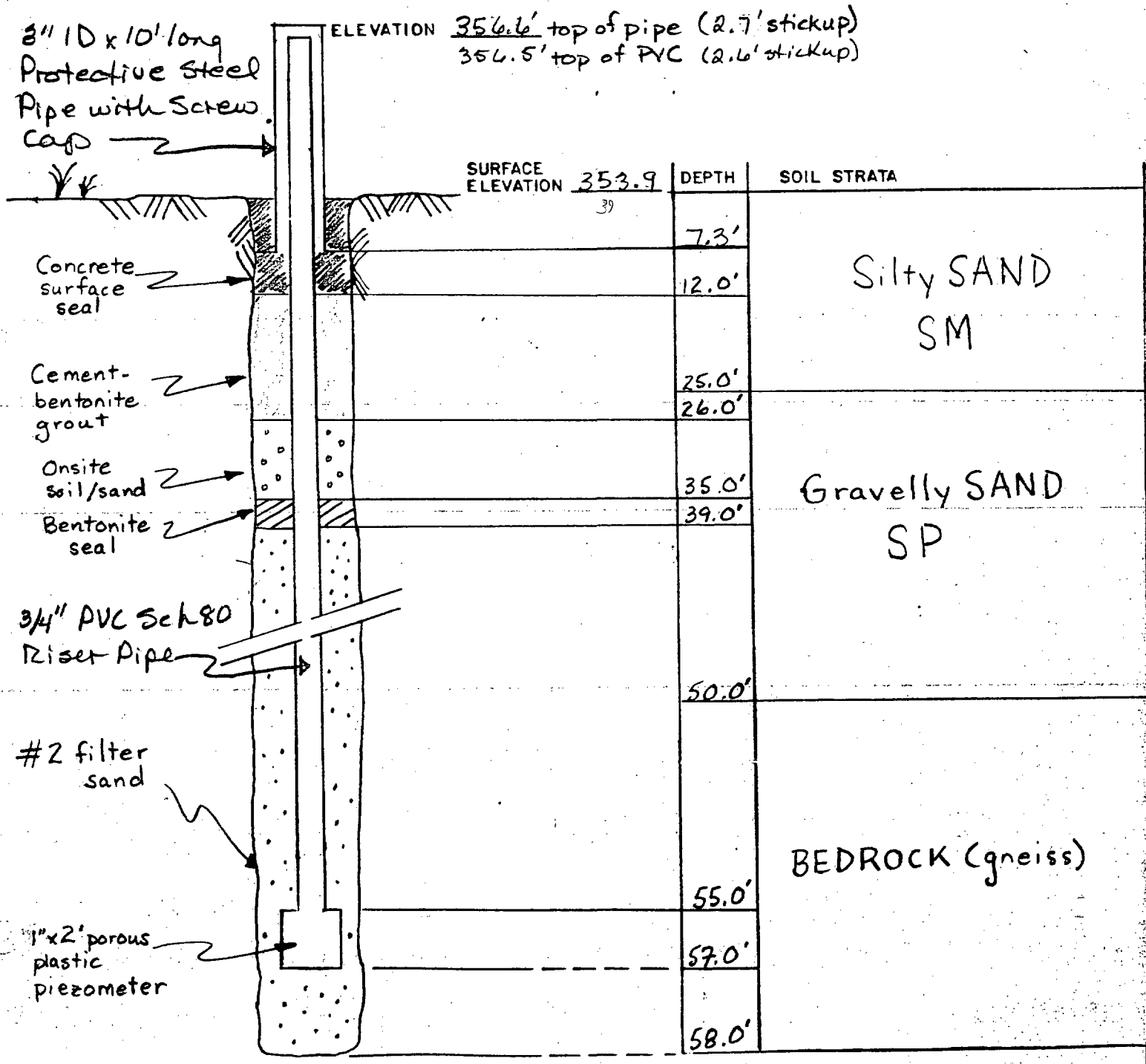

CORPS OF ENGINEERS, U. S. ARMY
NEW ENGLAND DIVISION
FOUNDATION AND MATERIALS BRANCH

FIELD LOG OF TEST BORING

PROJECT NO. D.O. #14

Site: Hop Brook Dam, CT

Page 1 of 19 Pages

Hole No. FD86-11 Diam. (Casing) 4"

Boring Started: 8 Sept 86

Co-ordinates: ~~X~~ STA 3+81 ~~Y~~ OFF 125' U/S

Boring Completed: 11 Sept 86

Drilled by: Todd, Saarinen, Cambridge

Report Submitted: 10 Oct 86

Purpose of Exploration: Install piezometers to determine hydrologic characteristics of foundation of dam.

Elevation Top of Hole: 339.0 M.S.L.

Total Overburden Drilled: 55.0 Feet

Elevation Top of Rock: 284.0 M.S.L.

Elevation Bottom of Hole: 279.0 M.S.L.

Total Rock Drilled: 5.0 Feet

Total Depth of Hole: 60.0 Feet

Core Recovered: 100 %

Core Recovered: 5.0 Ft.; – Diam. 2 1/8 In.

Soil Samples: 2 3/8 In. Diam. 11 No.

Soil Samples: 2 1/8 (R-1,2) In. Diam. 2 No. *

Casing Left in Place: 10 total Feet
3.4' stickup

Water Table Depth: 35.9'

Depth From	Depth To	Method of Drilling and Type of Bit Used
0	0.5	Removed boulders by hand.
0.5	6.0	3.0" ID diamond core using water.
6.0	28.0	3 7/8" OD roller bit using water.
28.0	34.0	3 7/8" OD roller bit using clear mud.
34.0	36.0	3 7/8" OD roller bit using water.
36.0	42.0	3 7/8" OD roller bit using clear mud.
42.0	60.0	NX diamond core using water.

INDEX

Ground Water — ~~Back of Page~~ 8
Boring Location Sketch — ~~Back of Page~~ 8
Overburden Record — Page 2-5
Rock Drilling — Page 5-6
Piezometer installation report — Page 7
Monitoring well installation detail — Page 19
— Page

Prepared by: D. R. Ferris (Field Data) — (Lab. Data)

Submitted by: Atlantic Testing Labs, Ltd

NED FORM DEC 63 121 — REPLACES EDITION OF JUN 51 WHICH MAY BE USED UNTIL EXHAUSTED

* These are overburden samples (cobbles, rubble) which had to be cored to obtain sampl

U. S. ARMY
CORPS OF ENGINEERS
NEW ENGLAND DIVISION

FIELD LOG OF TEST BORING

Site Hop Brook Dam, CT Page 3 of 9 Pages
Boring No. FD86-11 Desig. D Diam. (Casing) 4"
Co-ordinates: X STA 3 + 81 X OFF 125' U/S

Elevation Top of Boring 339.0 M.S.L.
Total Overburden Drilled 55.0 Feet
Elevation Top of Rock 284.0 M.S.L.
Total Rock Drilled 5.0 Feet
Elevation Bottom of Boring 279.0 M.S.L.
Total Depth of Boring 60.0 Feet
Core Recovered 100 % No. Boxes 1
Core Recovered 5.0 Ft. - Diam. 2 1/8 in.
Soil Samples 2 3/8 in. Diam. 11 No.
Soil Samples 2 1/8 (R-1,2) in. Diam. 2 No.*

Hammer Wt. 300# Boring Started 8 Sept 86
Hammer Drop 18"
Casing Left 10', 3" Boring Completed 11 Sept 86
Subsurface Water Data _____ Page 8
Obs. Well 3/4"
Drilled By Todd, Saarinen, Cambridge
Mfg. Des. Drill Skid mounted CME 45
Inspected By: D.R. FELLIS
Classification By: D.R. FELLIS
Classification By: _____

DEPTH 0	1' 2'	CORE/SAMPLE NO.	SIZE	~~DEPTH RANGE~~	~~CORE RECOVERY~~ REC	BLOWS PER FT. 6"	SAMPLING AND CORING OPERATIONS	CLASSIFICATION OF MATERIALS
0.5							Boulders removed by hand 0-0.5'	Boulder (gneiss) No sample retained
3.0'							3" ID diamond core using water End 9/8/86	
							Explorations continue 9/9/86	
							Cored to 6' and broke through at 6'.	Boulders/cobbles no sample retained
6.0							Sample at 6.0' using 2 3/8" ID split spoon sampler.	Medium brown c-mf+ SAND, some c-mf GRAVEL, trace SILT (saturated, non-plastic) moderately dense SP
7.5		S-1	2 3/8"	33%		28 53 81		
10.0							Drive 4" casing to 10' using 300# hammer. 3 7/8" OD wet rotary drilling using water to 10'.	

GENERAL REMARKS:
Elevations as surveyed by ATL.

* These are overburden samples (cobbles, rubble) which had to be cored to obtain samples

Site	Boring No.	Page 3 of 9
Hop Brook Dam, CT	FD86-11	

DEPTH	CORE/SAMPLE NO.	SIZE	~~DEPTH RANGE~~ REC	~~CORE RECOVERY~~ BLOWS PER 6"	SAMPLING AND CORING OPERATIONS	CLASSIFICATION OF MATERIALS
10.0						
			REC		3 7/8" OD wet rotary drilling using water. Drilling difficult due to boulder or cobbles.	Suspected cobbles, no sample taken.
					Wet rotary drilling to 15'	
15.0					Sample @ 15' using 2 3/8" ID split spoon sampler	med. brown c-mf+ SAND, little- SILT, trace c-m-f GRAVEL (wet, nonplastic) loose SM
	S-2	2 3/8"	50%	15 16 15 17	Drive casing to 15'.	
17.0						
					Wet rotary drilling to 20'	
20.0					Drive casing to 20'	
	S-3	2 3/8"	70%	14 40 29	Sample	Brown-grey c-mf+ SAND, little- SILT, little- c-mf GRAVEL (wet, nonplastic) mod. dense SM
21.5					Wet rotary drilling to 25'	
25.0						
	S-4	2 3/8"	45%	24 22 27	Sample Drive casing to 25'	Similar soils- SM
26.5						
27.0					Wet rotary drilling to 28'	

Site	Boring No.	Page 4 of 9
Hop Brook Dam, CT	FD86-11	

DEPTH		CORE/SAMPLE NO.	SIZE	REC	BLOWS PER 6"	SAMPLING AND CORING OPERATIONS	CLASSIFICATION OF MATERIALS
27.0'	1" = 2'						
28.0				REC		Wet rotary drilling (3 7/8" OD) using water to 28'.	
30.0		S-5	2 3/8"	33%	27 21 15 27	Sample using 2 3/8" ID split spoon sampler. End of explorations 9/9/86	Similar soils - SM
32.0		S-6	2 3/8"	100%	31 104 62 76	Explorations continue 9/10/86 Wet rotary drilling (3 7/8" OD) using clear mud for cleanout to 30'. Sample	Med. brown c-mf+ SAND, some c-mf GRAVEL, trace SILT (wet, nonplastic) dense SP
32.8		S-7	2 3/8"	50%	147 100/4"	Sample	Similar soils - SP
34.0						Drill to 34'.	Encountered cobbles
36.0						Due to presence of cobbles, no sample taken; drill to 36' using water.	
38.0		S-8	2 3/8"	35%	12 27 103 120	Sample Drill to 40' using clear mud using same logic as above.	Similar soils with some+ c+mf- GRAVEL SP
40.0							
41.0		S-9	2 3/8"	50%	40 200	Sample	Med. brown c-mf+ SAND and c+m-f GRAVEL; trace SILT (wet, non-plastic) dense SP
42.0						Drill to 42'	
44.0		S-10	2 3/8"	33%	25 26 17 25	Sample	Similar soils with some GRAVEL; SP

Site	Boring No.	Page 5 of 9
Hop Brook Dam, CT	FD86-11	

DEPTH		CORE/SAMPLE NO	SIZE	REC	BLOWS PER 6"	SAMPLING AND CORING OPERATIONS	CLASSIFICATION OF MATERIALS
41.0'	1" 2'						
		S-11	2 3/8"	55%	52 113 136	Sample using 2 3/8" ID split spoon sampler.	Similar soils; SP possible bedrock @ 45.5'
45.5							
		R-1	2 1/8"	33%		NX diamond core using water, to 50'. Attempt to clean hole using 3 7/8" OD roller bit. Difficult cleaning due to "cave-in" from boulder/cobble layer above bedrock.	Boulders / cobbles encountered. Sample placed in Core Box. 3 pieces 24 chips and fragments
50.0						End of Explorations 9/10/86	
						Explorations continue 9/11/86	
		R-2	2 1/8"	45%		NX diamond core using water to 55'.	Same cobble material with organics. Appears to be "blasted" rubble. 2 pieces ~30 chips/fragments
55.0							
		R-3	2 1/8"	100%		Drill to 60'. Attempt to set well, and hole had caved at 48'. Retrieved well and spun 3 3/8" OD casing to 50'. Cleaned to 60' with 2 13/16" OD roller bit and water.	Bedrock discovered @ 55'. White/black gneiss (weathered 55.0'-57.0') 6 pieces ~40 chips/fragments RQD = 70% Note: Vertical fractures and weathered seams first 2' of run.
60.0							
						Boring terminated @ 60.0' 9/11/86 Piezometer tip set at 52.5' 9/11/86	

FIELD LOG OF TEST BORING IN ROCK

SITE Hop Brook Dam, CT HOLE NO. FD86-11 PAGE 6 of 9

DATE	DEPTH FT. FROM	DEPTH FT. TO	RUN FT.	RUN REC'V'Y FT.	REC'V'Y %	DRILLING BEHAVIOR: FEED	DRILLING BEHAVIOR: WATER	DRILLING BEHAVIOR: REASON FOR PULL	ACTUAL DRILLING TIME	BIT NO. SIZE AND TYPE	ADDITIONAL REMARKS
9/10/86	45.5	50.0	4.5*	1.5	33	Light	No water loss	4.5' run	~45min.	NX diamond	Difficult drilling due to cobble layer above bedrock. Sample contains weathered rock with muddy seams.
9/11/86	50.0	55.0	5.0*	2.3'	45	Light	No water loss	5' run	~45min.	NX diamond	Similar rock as above. Possible blast rubble. Organics present.
9/11/86	55.0	60.0	5.0	5.0	100	Medium	No water loss	5' run	~90min.	NX diamond	Hard drilling, rock cohesive (Bedrock @ 55') Few muddy seams and vertical fractures. (first 2')

TOTAL BED ROCK DRILLED 5.0 FEET

TOTAL BED ROCK RECOVERED 5.0 FEET

BED ROCK RECOVERY 100 PERCENT

DRILLER Todd, Saarinen, Cambridge

INSPECTOR D.R. Ferris

NED FORM DEC 63 130

REPLACES EDITION OF APR 63 WHICH MAY BE USED UNTIL EXHAUSTED

* These are overburden samples (cobbles, rubble) which had to be cored to obtain samples.

PIEZOMETER INSTALLATION REPORT

PROJECT: CD017 Hop Brook Dam, CT | DATE: 11 Sept 86

LOCATION (STA): 3+81 | OFFSET FROM CENTER LINE: 125' U/S | PIEZ NO.: FD86-11

PIEZ TYPE: 1"ID x 2' porous plastic | DEPTH OF PIEZ: 52.5' | RISER PIPE DIAM: 3/4" Sch 80

PIEZ TIP SET IN (~~SOIL~~ TYPE): gneiss | SOIL SAMPLE NO.: R-2 | BORING DIAM: 3"

METHOD OF INSTALLATION: NX diamond core through cobbles/rubble.

TYPE OF PROTECTION FOR PIEZ: 10' long steel pipe (3" ID) | VENT: 1/8" hole in screw cap

GROUND ELEV.: 339.0' | ELEV. TOP OF RISER: 342.3 | ELEV PIEZ TIP: 286.5'

FILTER: Sand | FROM ELEV: 279.0' | TO ELEV: 307.0'

SEAL: 3/8" bentonite pellets | FROM ELEV: 307.0' | TO ELEV: 311.0'

INSTALLED BY: Todd, Saarinen, Cambridge | CONTRACT DACW 33-NO.: 85-D-0011 | FOREMAN: T.A. Beddoe

DATE OF INSTALLATION: 11 Sept 86 | DATE OF OBSERVATIONS: 15 Sept 86

METHOD OF TESTING PIEZ.: Falling Head Test

TIME	ELAPSED TIME MINUTES	DEPTH TO WATER FEET *	TIME	ELAPSED TIME MINUTES	DEPTH TO WATER FEET	TIME	ELAPSED TIME MINUTES	DEPTH TO WATER FEET
	Before test	39.2		30	37.8			
	0 **	0.0						
	1	9.3						
	5	24.2						
	10	31.4						

REMARKS: * Depth to water from top of PVC (3.3' stickup)

** Test began when water level was at top of PVC

D.R. Ferris
INSPECTOR

Site: Hop Brook Dam, CT
Boring No: FD86-11

SUBSURFACE WATER OBSERVATIONS

DATE	TIME	DEPTH-BOT. OF CASING	DEPTH-BOT. OF BORING	DEPTH TO WATER	ELEVATION WATER	REMARKS
9/15/86	1:30	6.6'	60.0'	35.9'	303.1'	
9/16/86	7:35	6.6'	60.0'	35.8'	303.2'	
9/17/86	8:25	6.6'	60.0'	36.0'	303.0'	
9/18/86	7:35	6.6'	60.0'	36.0'	303.0'	
9/19/86	7:15	6.6'	60.0'	35.9'	303.1'	
9/23/86	7:25	6.6'	60.0'	36.0'	303.0'	
9/24/86	3:15	6.6'	60.0'	36.1'	302.9'	
9/26/86	7:45	6.6'	60.0'	36.2'	302.8'	
9/29/86	13:27	6.6'	60.0'	36.1'	302.9'	
9/30/86	7:54	6.6'	60.0'	36.1'	302.9'	

Note: Depths are in feet below original ground (elev. 339.0')
Casing - 3.4' stickup PVC - 3.3' stickup

BORING LOCATION SKETCH

Not-to-scale

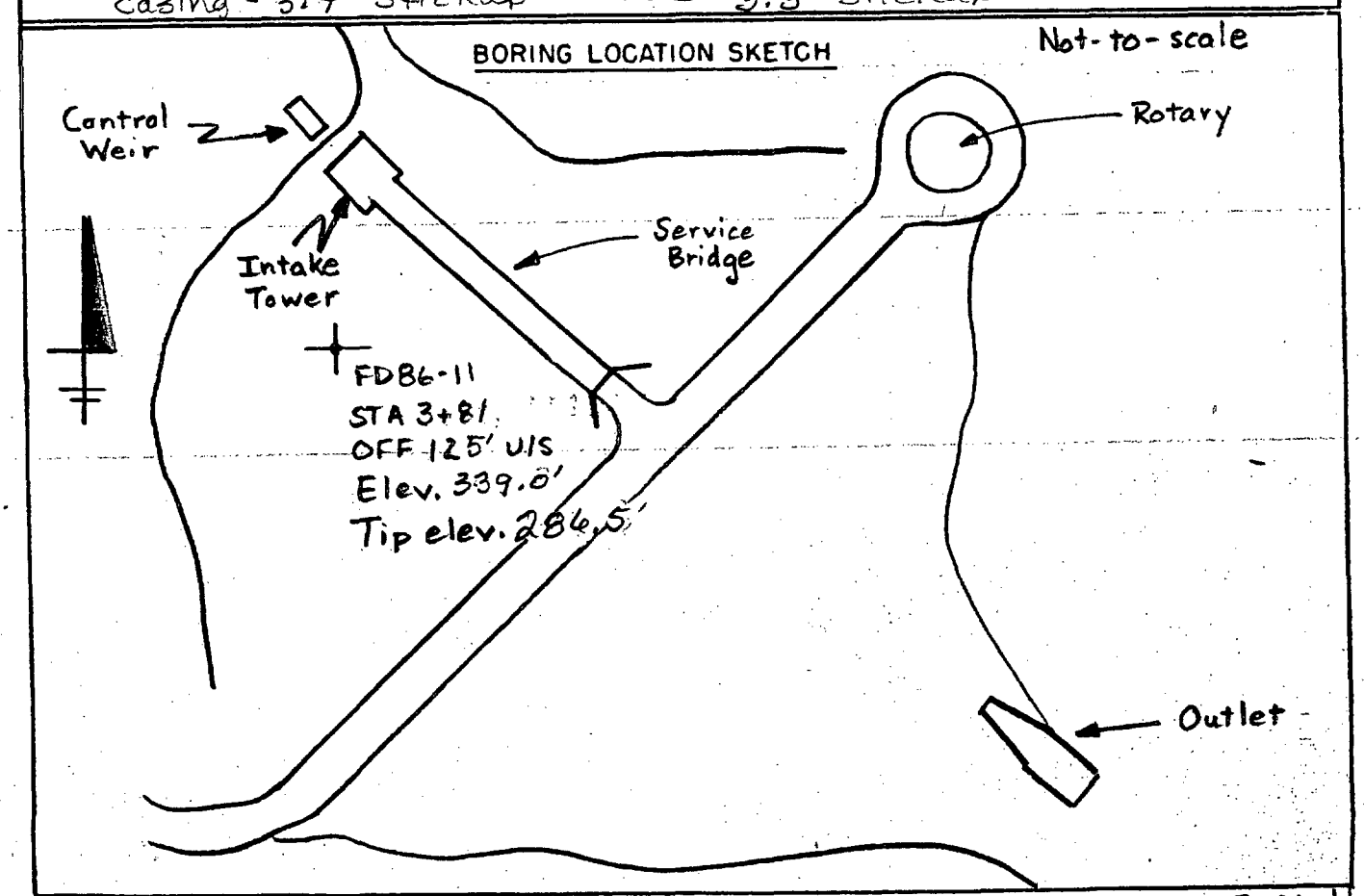

ATLANTIC TESTING LABORATORIES, LIMITED

MONITORING WELL INSTALLATION DETAIL

PROJECT: Hop Brook Dam, CT D.O. # 0014 **PROJECT NO.** CD017

CLIENT: USACE, NED **WELL NO.** FD86-11

Not-to-scale

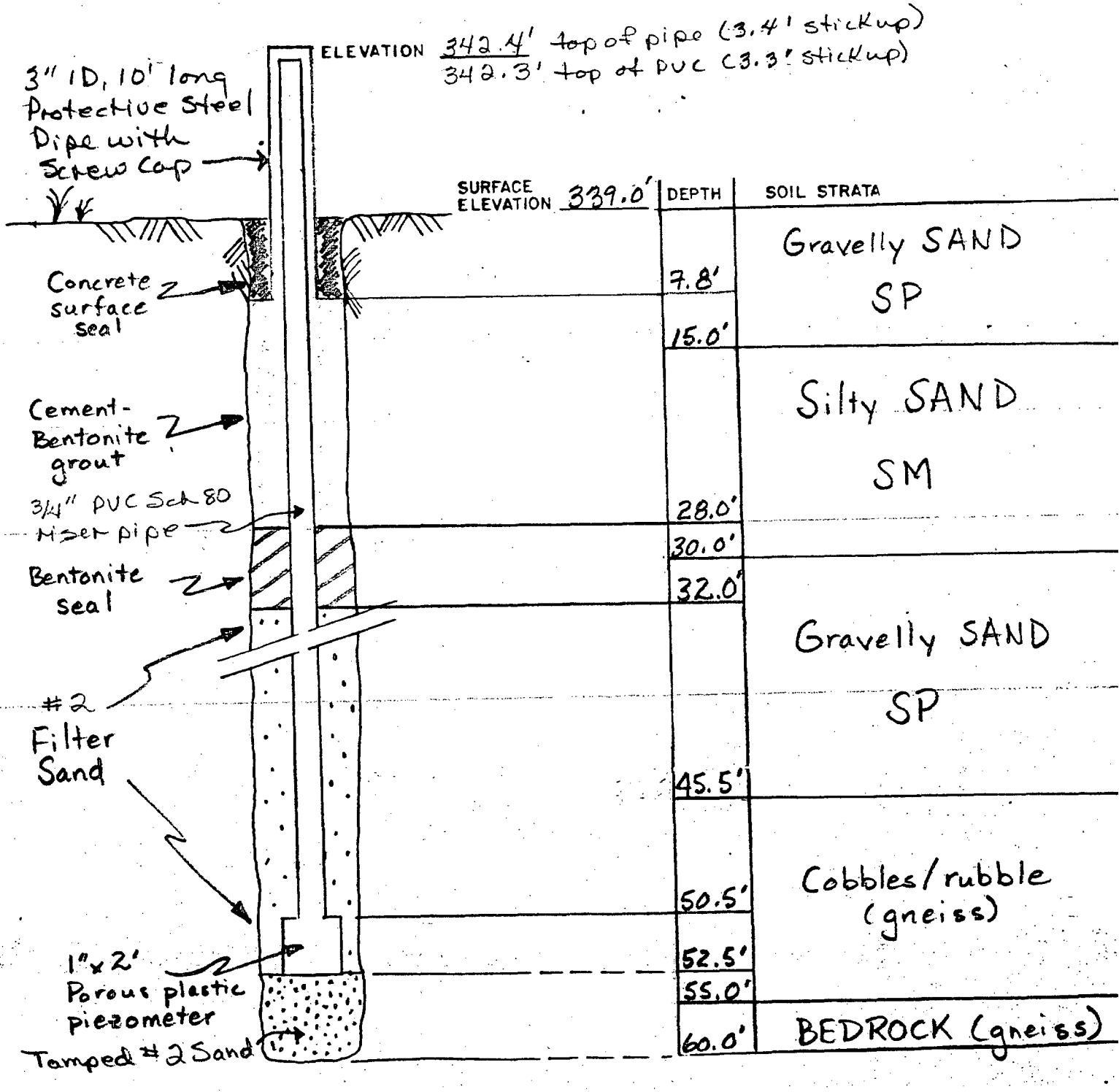

CORPS OF ENGINEERS, U. S. ARMY
NEW ENGLAND DIVISION
FOUNDATION AND MATERIALS BRANCH

FIELD LOG OF TEST BORING

PROJECT NO. D.O. #14

Site Hop Brook Dam, CT — Page 1 of 9 Pages

Hole No. FD86-12 Diam. (Casing) — — Boring Started 9/12/86

Co-ordinates: STA X 5+10 OFF X 191.7' D/S — Boring Completed 9/17/86

Drilled by Todd & Saarinen — Report Submitted 10 Oct 86

Purpose of Exploration Install piezometers to determine hydrologic characteristics of foundation of dam

Elevation Top of Hole 311.7 M.S.L.
Total Overburden Drilled 1.5' Feet
Elevation Top of Rock 310.2 M.S.L.
Elevation Bottom of Hole 270.7 M.S.L.
Total Rock Drilled 39.5 Feet
Total Depth of Hole 41.0 Feet
Core Recovered 98 %
Core Recovered 38.9 Ft.: — Diam. 2 1/8 in.
Soil Samples — in. Diam. — No.
Soil Samples — in. Diam. — No.

Casing Left in Place 10 Total Feet
3.6' stickup

Water Table Depth 23.8'

Depth From	Depth To	Method of Drilling and Type of Bit Used
0.0'	1.5'	remove boulders by hand
1.5'	41.0'	NX diamond core using water

INDEX

Ground Water — Back of Page 8
Boring Location Sketch — Back of Page 8
Overburden Record — Page 2
Rock Drilling — Page 2-6
Piezometer Installation Rpt — Page 7
Monitoring Well Install. Detail — Page 9
— Page

Prepared by Theresa A. Reddoe (Field Data) — (Lab. Data)

Submitted by Atlantic Testing Labs, Ltd.

NED FORM DEC 63 121 — REPLACES EDITION OF JUN 51 WHICH MAY BE USED UNTIL EXHAUSTED

U.S. ARMY
CORPS OF ENGINEERS
NEW ENGLAND DIVISION

FIELD LOG OF TEST BORING

Site: Hop Brook Dam, CT — Page 2 of 9 Pages

Boring No. FD86-12 Desig. G* Diam. (Casing) —

Co-ordinates: X STA 5+10 Y OFF 197.7' D/S

Elevation Top of Boring	311.7 M.S.L.	Hammer Wt. —	Boring Started 9/12/86
Total Overburden Drilled	1.5 Feet	Hammer Drop —	
Elevation Top of Rock	310.2 M.S.L.	Casing Left 10', 2"	Boring Completed 9/17/86
Total Rock Drilled	39.5 Feet	Subsurface Water Data	Page 8
Elevation Bottom of Boring	270.7 M.S.L.	Obs. Well 3/4"	
Total Depth of Boring	41.0 Feet	Drilled By Todd & Saarinen	
Core Recovered 98 %	No. Boxes 2	Mfg. Des. Drill skid-mounted CME 45	
Core Recovered 38.9 Ft.	Diam. 2 1/8 in.	Inspected By: TA Beddoe	
Soil Samples —	in. Diam. — No.	Classification By: TA Beddoe	
Soil Samples —	in. Diam. — No.	Classification By: —	

DEPTH 0'	DEPTH 1" = 2'	CORE/SAMPLE NO.	SIZE	DEPTH RANGE	CORE RECV'Y	SAMPLING AND CORING OPERATIONS	CLASSIFICATION OF MATERIALS
						remove boulders by hand	gneissic boulders
1.5						end of explorations 9/12/86	
						start of explorations 9/16/86 NX diamond core with water no water loss	white/black micaceous gneiss with a few muddy seams @ 4.5-6.5' 8 pieces 70+ chips and fragments RQD = 46%
		R-1	2 1/8"	1.5-6.5	100%		
6.5							
		R-2	2 1/8"	6.5-11.5	88%	~10% water loss	Similar rock with muddy fractures @ 7.5' + 10'. 10 pieces 16 chips and fragments RQD = 57%
10'							

GENERAL REMARKS:
* This is the redrill of FD86-5.
Elevations as surveyed by ATL
Piezometer tip set at 37.0'

Site: Hop Brook Dam, CT

Boring No. FD86-12

DEPTH	CORE/SAMPLE NO.	SIZE	DEPTH RANGE	~~BLOWS PER FOOT~~ CORE REC'VY	SAMPLING AND CORING OPERATIONS	CLASSIFICATION OF MATERIALS
10'						
	R-2	2'/8"	6.5-11.5	88%	NX diamond core with water ~10% water loss	
11.5						
	R-3	2'/8"	11.5-16.5	100%		white/black micaceous gneiss 12 pieces 8 chips and fragments RQD=92%
16.5						
	R-4	2'/8"	16.5-21.5	100%	25% water loss	Similar rock 7 pieces 22 chips and fragments RQD=88%
21.5						
	R-5	2'/8"	21.5-26.5	92%	10% water loss	Similar rock, no longer strongly micaceous 6 pieces 1 chip RQD=90%
26.5'						
27'	R-6	2'/8"	26.5-31.0	110%		

Site: Hop Brook Dam, CT

Boring No. FD86-12

DEPTH 27'	DEPTH 1'-2'	CORE/SAMPLE NO.	SIZE	DEPTH RANGE	~~BLOWS PER FOOT~~ / CORE REC'VY	SAMPLING AND CORING OPERATIONS	CLASSIFICATION OF MATERIALS
		R-6	2 1/8"	26.5-31.0	110%	NX diamond core with water ~10% water loss	Similar Rock with two more felsic layers 9 pieces 9 chips & fragments RQD = 90%
31.0						end of explorations 9/16/86 explorations continue 9/17/86	
		R-7	2 1/8"	31.0-36.0	100%		Similar Rock 10 pieces 39 chips and fragments RQD = 92%
36.0							
		R-8	2 1/8"	36.0-41.0	100%	no water loss	Similar Rock 6 pieces 2 chips RQD = 100%
41.0							
						boring terminated at 41.0' 9/17/86 piezometer tip set at 37.0' 9/17/86.	

FIELD LOG OF TEST BORING IN ROCK

SITE Hop Brook Dam, CT HOLE NO. FD86-12 PAGE 5 of 9

DATE	DEPTH FT. FROM	DEPTH FT. TO	RUN FT.	RUN REC'V'Y FT.	REC'V'Y %	DRILLING BEHAVIOR: FEED	DRILLING BEHAVIOR: WATER	DRILLING BEHAVIOR: REASON FOR PULL	ACTUAL DRILLING TIME	BIT NO. SIZE AND TYPE	ADDITIONAL REMARKS
9/16/86	1.5	6.5	5.0	5.0	100%	medium	no water loss noted	end of 5' run	45 min	NX diamond	Run #1 more difficult drilling from 4.5 to 6.5 due to water-bearing muddy fractures - top 3' of run good clean massive rock
9/16/86	6.5	11.5	5.0	4.4'	88%	medium	10% water loss	end of 5' run	25 min	NX diamond	Run #2 - note 2 muddy seams, more fractured rock @ 7.5', 10'
9/16/86	11.5	16.5	5.0	5.0	100%	medium	10% water loss	end of 5' run	30 min	NX diamond	Run #3 - rock more coherent - fewer altered fractures.
9/16/86	16.5	21.5	5.0	5.0	100%	medium	25% water loss	end of 5' run	40 min	NX diamond	Run #4 - rock coherent - one fractured area @ 20'

TOTAL BED ROCK DRILLED 39.5 FEET

TOTAL BED ROCK RECOVERED 38.9 FEET

BED ROCK RECOVERY 98 PERCENT

DRILLER Todd & Saarinen

INSPECTOR TA Beddoe

NED FORM DEC 63 130

REPLACES EDITION OF APR 62 WHICH MAY BE USED UNTIL EXHAUSTED

FIELD LOG OF TEST BORING IN ROCK

SITE Hop Brook Dam, CT HOLE NO. FD86-12 PAGE 6 of 9

DATE	DEPTH PT. FROM	DEPTH PT. TO	RUN PT.	RUN REC'V'Y PT.	REC'V'Y %	DRILLING BEHAVIOR: FEED	DRILLING BEHAVIOR: WATER	DRILLING BEHAVIOR: REASON FOR PULL	ACTUAL DRILLING TIME	BIT NO. SIZE AND TYPE	ADDITIONAL REMARKS
9/16/86	21.5	26.5	5.0	4.5	90%	heavier	10% water loss	end of 5' run	65 min	NX diamond	Run #5 - rock very coherant - harder to drill - took longer - rock no longer strongly micaceous
9/16/86	26.5	31.0	4.5	5.0	110%	heavier (as above)	10% water loss	end of 5' run	75 min	NX diamond	Run #6 - picked up 5" from previous run - rock coherant - note mineralogy changing
9/17/86	31.0	36.0	5.0	5.0	100%	heavier (as above)	16% water loss	end of 5' run	40 min	NX diamond	Run #7 - had to change bit due to wear - one fractured zone @ 33.0', otherwise rock coherant
9/17/86	36.0	41.0	5.0	5.0	100%	medium	no water loss	end of 5' run	35 min	NX diamond	Run #8 - unfractured rock

TOTAL BED ROCK DRILLED 39.5 FEET

TOTAL BED ROCK RECOVERED 38.9 FEET

BED ROCK RECOVERY 98 PERCENT

DRILLER Todd & Saarinen

INSPECTOR TA Beddoe

NED FORM DEC 64 130

REPLACES EDITION OF APR 63 WHICH MAY BE USED UNTIL EXHAUSTED

PIEZOMETER INSTALLATION REPORT

PROJECT: Hop Brook Dam, CT | DATE: 17 Sept 86

LOCATION (STA): 5+10 | OFFSET FROM CENTER LINE: 191.7' D/S | PIEZ NO.: FD86-12

PIEZ TYPE: 1" ID x 2' Porous Plastic | DEPTH OF PIEZ: 37.0' | RISER PIPE DIAM: 3/4" Sch. 80

PIEZ TIP SET IN (SOIL TYPE): gneiss | ~~SOIL~~ ROCK SAMPLE NO.: R2-8 | BORING DIAM: 3"

METHOD OF INSTALLATION: NX diamond coring through rock using water

TYPE OF PROTECTION FOR PIEZ: 10' long steel pipe (3" ID) | VENT: 1/8" hole in screw cap

GROUND ELEV.: 317.7' | ELEV. TOP OF RISER: 315.3 | ELEV PIEZ TIP: 274.7'

FILTER: #2 Sand | FROM ELEV: 270.7' | TO ELEV: 287.2'

SEAL: 3/8" bentonite pellets | FROM ELEV: 287.2' | TO ELEV: 291.2'

INSTALLED BY: Todd & Saarinen | CONTRACT NO.: DACW33-85-D-0011 | FOREMAN: TA Beddoe

DATE OF INSTALLATION: 17 Sept 86 | DATE OF OBSERVATIONS: 18 Sept 86

METHOD OF TESTING PIEZ.: falling head test

TIME	ELAPSED TIME MINUTES	DEPTH TO WATER FEET *	TIME	ELAPSED TIME MINUTES	DEPTH TO WATER FEET	TIME	ELAPSED TIME MINUTES	DEPTH TO WATER FEET
	before test	27.4		30	27.5			
	0**	0.0						
	1	9.9						
	5	23.4						
	10	26.6						

REMARKS: * depth to water from top of PVC (3.6' stickup)

** test began when water level at top of PVC.

Theresa A. Beddoe
INSPECTOR

Site: Hop Brook Dam, CT
Boring No: FD86-12

SUBSURFACE WATER OBSERVATIONS

DATE	TIME	DEPTH-BOT. OF CASING	DEPTH-BOT. OF BORING	DEPTH TO WATER	ELEVATION WATER	REMARKS
9/18/86	10:00	6.4'	41.0'	23.8'	287.9'	
9/19/86	7:20	6.4'	41.0'	23.9'	287.8'	
9/23/86	7:30	6.4'	41.0'	23.9'	287.8'	
9/24/86	3:20	6.4'	41.0'	24.0'	287.7'	
9/26/86	7:50	6.4'	41.0'	24.5'	287.2'	
9/29/86	13:45	6.4'	41.0'	24.8'	286.9'	
9/30/86	8:04	6.4'	41.0'	24.8'	286.9'	

Note: Depths are in feet below original ground (311.7' elev)
PVC and casing have 3.6' stickup above ground.

BORING LOCATION SKETCH

Not-to-scale

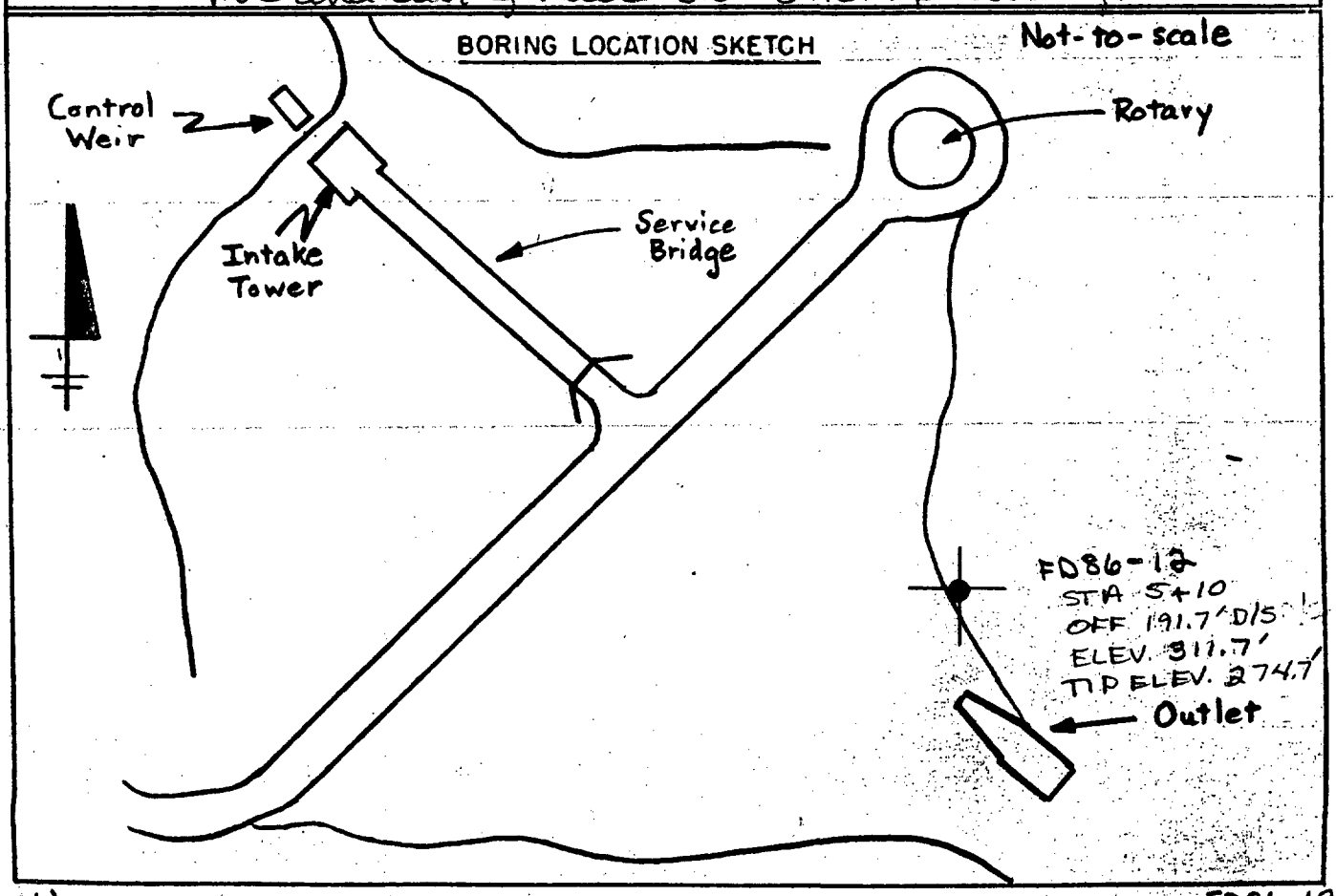

ATLANTIC TESTING LABORATORIES, LIMITED

MONITORING WELL INSTALLATION DETAIL

PROJECT: Hop Brook Dam, CT D.O.# 0014

PROJECT NO. CD017

CLIENT: USACE, NED

WELL NO. FD86-12

Not to Scale

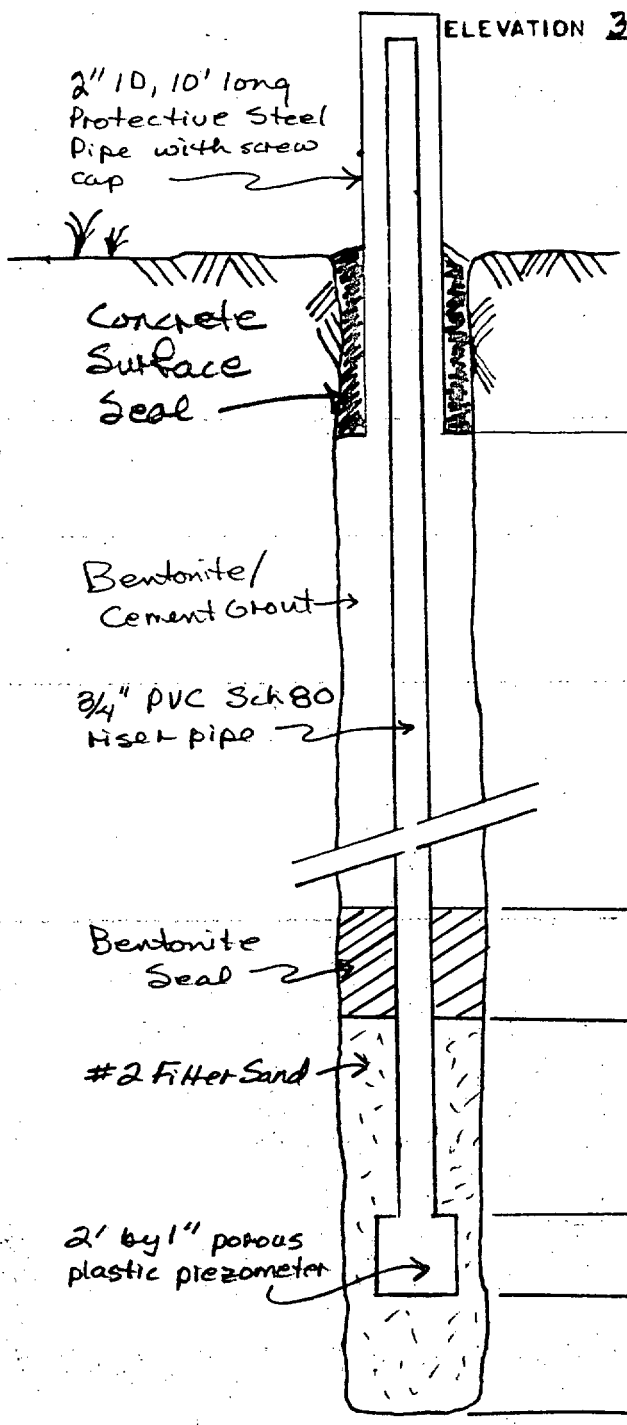

ELEVATION 315.3' top of pipe (3.6' stickup)
top of PVC (3.6' stickup)

SURFACE ELEVATION 311.7'

DEPTH	SOIL STRATA
1.5'	loose boulders
6.4'	
	BEDROCK (gneiss)
20.5'	
24.5'	
35.0'	
37.0'	
41.0'	

CORPS OF ENGINEERS, U. S. ARMY
NEW ENGLAND DIVISION
FOUNDATION AND MATERIALS BRANCH

FIELD LOG OF TEST BORING

PROJECT NO. D.O. #0014

Site Hop Brook Dam, CT

Page 1 of 11 Pages

Hole No. FD86-13 Diam. (Casing) 4"

Boring Started 18 Sept 86

Co-ordinates: STA 5+22 OFF 103.5' D/S

Boring Completed 23 Sept 86

Drilled by Todd & Saarinen

Report Submitted 10 Oct 86

Purpose of Exploration install piezometers to determine hydrologic characteristics of foundation of dam.

Elevation Top of Hole 343.0 M.S.L.

Total Overburden Drilled 20.0 Feet

Elevation Top of Rock 323.0 M.S.L.

Elevation Bottom of Hole 278.5 M.S.L.

Total Rock Drilled 44.5 Feet

Total Depth of Hole 64.5 Feet

Core Recovered 98 %*

Core Recovered 41.9 Ft.: Diam. 2 1/8 In.

Soil Samples 2 3/8 In. Diam. 1 No.

Soil Samples — In. Diam. — No.

Casing Left in Place 10' Total Feet
3.6' Stickup

Water Table Depth 43.7'

Depth From	Depth To	Method of Drilling and Type of Bit Used
0	6.5	3.0" ID diamond core using water.
6.5	21.5	3 7/8" OD roller bit using water.
21.5	64.5	NX diamond core using water

INDEX

Ground Water — ~~Back of~~ Page 10
Boring Location Sketch — ~~Back of~~ Page 10
Overburden Record — Page 2-3
Rock Drilling — Page 3-8
Piezometer Installation Report — Page 9
Monitoring Well Install. Detail — Page 11
— Page

Prepared by Theresa A. Beddoe
Field Data — Lab. Data

Submitted by Atlantic Testing Labs, Ltd.

NED FORM DEC 63 121 REPLACES EDITION OF JUN 51 WHICH MAY BE USED UNTIL EXHAUSTED

* Note: initial 1.5' of bedrock was drilled with roller bit. Core recov. = 41.9

U.S. ARMY
CORPS OF ENGINEERS
NEW ENGLAND DIVISION

FIELD LOG OF TEST BORING

Site Hop Brook Dam, CT Page 2 of 11 Pages

Boring No. FD86-13 Desig. A Diam. (Casing) 4"

Co-ordinates: N STA 5+22 E OFF 103.5' O/S

Elevation Top of Boring 343.0 M.S.L.
Total Overburden Drilled 20.0 Feet
Elevation Top of Rock 323.0 M.S.L.
Total Rock Drilled 44.5 Feet
Elevation Bottom of Boring 278.5 M.S.L.
Total Depth of Boring 64.5 Feet
Core Recovered 98 % No. Boxes 3
Core Recovered 41.9 Ft. Diam. 2 1/8 In.
Soil Samples 2 3/8 In. Diam. 1 No.
Soil Samples — In. Diam. — No.

Hammer Wt. 300# Boring Started 18 Sept 86
Hammer Drop 18"
Casing Left 10', 3" Boring Completed 23 Sept 86
Subsurface Water Data _____ Page 10
Obs. Well 3/4"
Drilled By Todd & Saarinen
Mfg. Des. Drill skid-mounted CME45
Inspected By: TA Beddoe
Classification By: TA Beddoe
Classification By: —

DEPTH 0'	1" = 2'	CORE/SAMPLE NO.	SIZE	DEPTH RANGE	BLOWS PER FT. / CORE RECOVERY	6" SAMPLING AND CORING OPERATIONS	CLASSIFICATION OF MATERIALS
				REC		3" ID Diamond Core Using Water, 0-6.5'	Boulders (gneiss) No Sample Retained
6.5'						Drive 4" casing to 7.0' using 300# hammer 3 7/8" OD wet rotary drilling using water to 10! Note drilling difficult due to cobbles	
10'							

GENERAL REMARKS:
Elevations as surveyed by ATL.

Site	Boring No.	Page 3 of 14
Hop Brook Dam, CT	FD86-13	

DEPTH 10'	1' 2'	CORE/SAMPLE NO.	SIZE	DEPTH RANGE	BLOWS PER 6" / CORE RECV'Y	6" SAMPLING AND CORING OPERATIONS	CLASSIFICATION OF MATERIALS
		S-1	2 3/8"	REC 70%	70 44 47	Drive 4" casing to 10' using 300# hammer. Wash back down to 10' using 3 7/8" OD wet rotary drilling with water. Sample at 10' using 2 3/8" ID split spoon sampler.	Medium brown cmf SAND, little c-mf+ GRAVEL, trace SILT (wet, nonplastic) mod. dense SW (includes 2 coarse gravel not retained
11.5							
15.0						Drill to 15'. Drive casing to 14'. Wash back down to 15'. End of explorations 9/18/86	
15.5		S-2	2 3/8"	0%	105	Explorations begin 9/19/86. Drill to 20'. Drive casing to 20'. Drill/Wash back down to 20'.	No Recovery - may be driving a cobble
20'						At 20' encounter rock. No sample attempted. Proceed to drill into rock to 21.5' with roller bit.	Probable bedrock (gneiss)
21.5				DEPTH RANGE	REC'VY	NX diamond core with water. No water loss	
		R-1	2 1/8"	21.5-26.5	96%		black/white gneiss* 6 pieces 2 chips RQD = 90% * rock is very coherent for being at the rock surface.
26.5							
27'		R-2	2 1/8"	26.5-31.5	95%		

Site	Boring No.	Page 4 of 11
Hop Brook Dam, CT	FD86-13	

DEPTH		CORE/SAMPLE NO.	SIZE	DEPTH RANGE	BLOWS PER FT / CORE REC'VY	SAMPLING AND CORING OPERATIONS	CLASSIFICATION OF MATERIALS
27'	1" = 2'					NX diamond core with water	
		R-2	2 1/8"	26.5 -31.5	95%	no water loss	Similar Rock 9 pieces 9 chips and fragments RQD = 90%
31.5							
		R-3	2 1/8"	31.5-36.5	100%		Similar Rock 15 pieces 1 chip RQD = 81 %
36.5							
		R-4	2 1/8"	36.5-41.5	100%		Similar rock 7 pieces ~60 chips/fragments RQD ≅ 33%
41.5						end of explorations 9/19/8 Explorations continue 9/22/86	
		R-5	2 1/8"	41.5 -46.5	100%	NX diamond core with water. 50% water loss at 42' - 44'	Similar rock 11 pieces 38 chips/fragments RQD ≅ 60%
44'							

Site	Boring No.	Page 5 of 11
Hop Brook Dam, CT	FD86-13	

DEPTH 44'	1" = 2'	CORE/SAMPLE NO.	SIZE	DEPTH RANGE	BLOWS PER FT / CORE RECOVERY	6" SAMPLING AND CORING OPERATIONS	CLASSIFICATION OF MATERIALS
46.5		R-5	2 1/8"	41.5 -46.5	100%	NX diamond core with water.	Similar rock 11 pieces 38 chips / fragments RQD ≅ 60%
51.5		R-6	2 1/8"	46.5 -51.5	100%	Approx. 90% water loss.	Similar rock 4 pieces 12 chips / fragments RQD ≅ 80%
56.5		R-7	2 1/8"	51.5-56.5	100%	Approx. 90% water loss.	Similar rock 5 pieces ~20 chips / fragments RQD ≅ 95%
58.0		R-8	2 1/8"	56.5 -58.0	100%	End of explorations 9/22/86 Explorations continue 9/23/86 NX diamond core with water. ~100% water loss.	Similar rock; bit plugged due to fractures. Noticed muddy water leaving dam outlet. 2 pieces ~30 chips and fragments RQD ≅ 30%
61'		R-9	2 1/8"	58.0 63.0	80%	No water loss	Similar rock, first foot of run same as R-8 3 pieces 10 chips and fragments RQD ≅ 80%

Site: Hop Brook Dam, CT	Boring No. FD86-13	Page 6 of 11

DEPTH		CORE/SAMPLE NO.	SIZE	DEPTH RANGE	BLOWS PER FT. / CORE RECV'Y	SAMPLING AND CORING OPERATIONS	CLASSIFICATION OF MATERIALS
61'	1" = 2'						
		R-9	2 1/8"	58.0-63.0	80%	NX diamond core using water. No water loss.	Sample description - see previous page
63.0							
		R-10	2 1/8"	63.0-64.5	100%		Similar rock 1 piece 40 chips and fragments (mostly wash rubble) RQD ≅ 40%
64.5							
						Boring terminated at 64.5' 9/23/86. Piezometer tip set at 63.5' 9/23/86	

FIELD LOG OF TEST BORING IN ROCK

SITE Hop Brook Dam, CT HOLE NO. FD86-13 PAGE 7 of 11

DATE	DEPTH PT. FROM	DEPTH PT. TO	RUN PT.	RUN REC'V'Y PT.	REC'V'Y %	DRILLING BEHAVIOR: FEED	DRILLING BEHAVIOR: WATER	DRILLING BEHAVIOR: REASON FOR PULL	ACTUAL DRILLING TIME	BIT NO. SIZE AND TYPE	ADDITIONAL REMARKS
9/19/86	21.5	26.5	5.0	4.8	96%	medium	no water loss	end of 5' run	35 min	NX diamond	Run #1 - no problems drilling - fractures are altered - rock coherent
9/19/86	26.5	31.5	5.0	4.75	95%	medium	no water loss	end of 5' run	30 min	NX diamond	Run #2 - no problems - fractures the same
9/19/86	31.5	36.5	5.0	5.0	100%	medium	no water loss	end of 5' run	25 min	NX diamond	Run #3 - as above - rock has two fractured zones @ 33.0-33.5 + @ 36.0-36.5 water bearing
9/19/86	36.5	41.5	5.0	5.0	100	medium	no water loss	end of 5' run	26 min	NX diamond	Run #4 - no problems - has fractures
9/22/86	41.5	46.5	5.0	5.0	100	medium	50% water loss from 42'-44'	5' run	30 min.	NX diamond	Run # 5 - rock has weathered fractures

TOTAL BED ROCK DRILLED 44.5 FEET

TOTAL BED ROCK RECOVERED 41.9 FEET

BED ROCK RECOVERY 98 PERCENT %

DRILLER Todd & Saarinen & Cambridge

INSPECTOR TA Beddoe

NED FORM DEC 63 130

REPLACES EDITION OF APR 63 WHICH MAY BE USED UNTIL EXHAUSTED

41.9

FIELD LOG OF TEST BORING IN ROCK

SITE Hop Brook Dam, CT ROLE NO. FD86-13 PAGE 8 of 11

DATE	DEPTH PT. FROM	DEPTH PT. TO	RUN PT.	RUN REC'V'Y PT.	REC'V'Y %	DRILLING BEHAVIOR: FEED	DRILLING BEHAVIOR: WATER	DRILLING BEHAVIOR: REASON FOR PULL	ACTUAL DRILLING TIME	BIT NO. SIZE AND TYPE	ADDITIONAL REMARKS
9/22/86	46.5	51.5	5.0	5.0	100	Light	90% loss	5' run	45 min.	NX diamond	Run #6 - Rock has weathered fractures.
9/22/86	51.5	56.5	5.0	5.0	100	Light	90% loss	5' run	60 min.	NX diamond	Run #7 - Rock has weathered fractures.
9/23/86	56.5	58.0	1.5	1.5	100	Light	100% loss	Plugging of bit	25 min.	NX diamond	Run #8 - hard drilling due to fractured rock. Noticed muddy water leaving dam outlet during drilling.
9/23/86	58.0	63.0	5.0	4.3	83	Light	100% loss for first ft, then no loss	5' run	60 min.	NX diamond	Run #9 - first foot of run same characteristics as Run #8.
9/23/86	63.0	64.5	1.5	1.5	100	Light	No water loss	1.5' run	20 min.	NX diamond	Run #10 - no problems

TOTAL BED ROCK DRILLED 44.5 FEET

TOTAL BED ROCK RECOVERED 41.9 FEET

BED ROCK RECOVERY 98 PERCENT *

DRILLER Todd & Cambridge

INSPECTOR Beddoe

NED FORM DEC 63 130

REPLACES EDITION OF APR 63 WHICH MAY BE USED UNTIL EXHAUSTED

41.9

PIEZOMETER INSTALLATION REPORT

PROJECT: Hop Brook Dam, CT | DATE: 23 Sept 86

LOCATION (STA): 5+22 | OFFSET FROM CENTER LINE: 103.5' D/S | PIEZ NO.: FD86-13

PIEZ TYPE: 1" ID x 2' porous plastic | DEPTH OF PIEZ: 63.5' | RISER PIPE DIAM: 3/4" Sch 80

PIEZ TIP SET IN (~~SOIL~~ ROCK TYPE): gneiss | ~~SOIL~~ ROCK SAMPLE NO.: R-10 | BORING DIAM: 3"

METHOD OF INSTALLATION: NX diamond core through bedrock

TYPE OF PROTECTION FOR PIEZ: 10' long steel pipe (3" ID) | VENT: 1/8" hole in screw cap

GROUND ELEV.: 343.0 | ELEV. TOP OF RISER: 346.5' | ELEV PIEZ TIP: 279.5'

FILTER: #2 Sand | FROM ELEV: 278.5' | TO ELEV: 319.5'

SEAL: 3/8" bentonite pellets | FROM ELEV: 319.5' | TO ELEV: 324.0'

INSTALLED BY: Todd & Saarinen | CONTRACT NO.: DACW 33-85-D-0011 | FOREMAN: TA Beddoe

DATE OF INSTALLATION: 23 Sept 86 | DATE OF OBSERVATIONS: 24 Sept 86

METHOD OF TESTING PIEZ.: Falling Head Test

TIME	ELAPSED TIME MINUTES	DEPTH TO WATER FEET *	TIME	ELAPSED TIME MINUTES	DEPTH TO WATER FEET	TIME	ELAPSED TIME MINUTES	DEPTH TO WATER FEET
	Before Test	47.0		30	45.9			
	0**	0.0						
	1	20.4						
	5	36.5						
	10	41.9						

REMARKS: * Depth to water from top of PVC (3.6' stickup)

** Test began when water level was at top of PVC.

Theresa A. Beddoe
INSPECTOR

Site: Hop Brook Dam, CT
Boring No: FD86-13

SUBSURFACE WATER OBSERVATIONS

DATE	TIME	DEPTH-BOT. OF CASING	DEPTH-BOT. OF BORING	DEPTH TO WATER	ELEVATION WATER	REMARKS
9/26/86	7:55	6.4'	64.5'	43.7'	299.3'	
9/29/86	13:36	6.4'	64.5'	43.9'	299.1'	
9/30/86	8:10	6.4'	64.5'	44.0'	299.0'	

Note: Depths are in feet below original ground ~~(343.0 elev)~~
PVC and casing have 3.6' stickup above ground.

BORING LOCATION SKETCH Not-to-scale

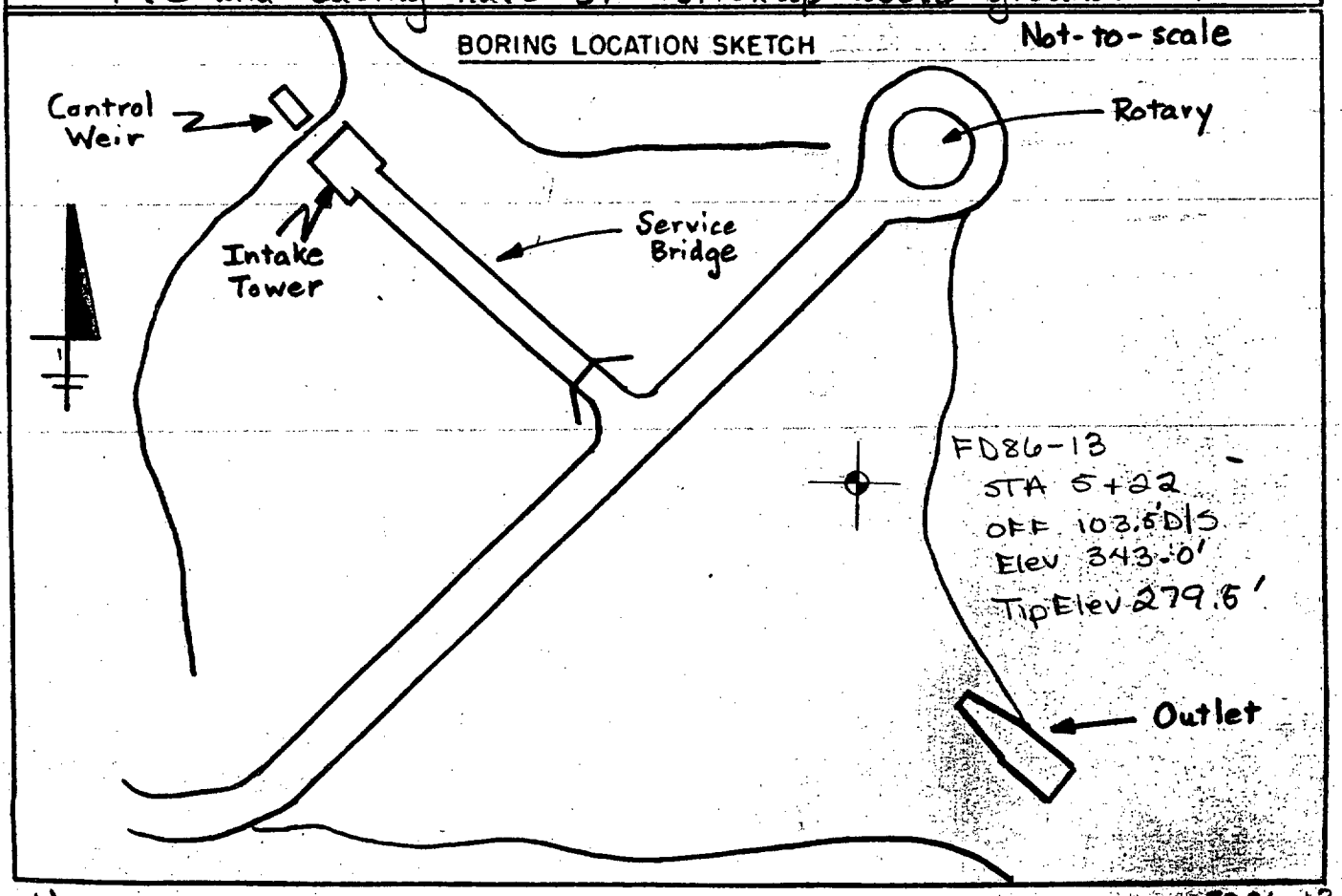

ATLANTIC TESTING LABORATORIES, LIMITED

MONITORING WELL INSTALLATION DETAIL

PROJECT: Hop Brook Dam, CT
DO # 0014

PROJECT NO. CD017

CLIENT: USACE, NED

WELL NO. FD86-13

Not-to-scale

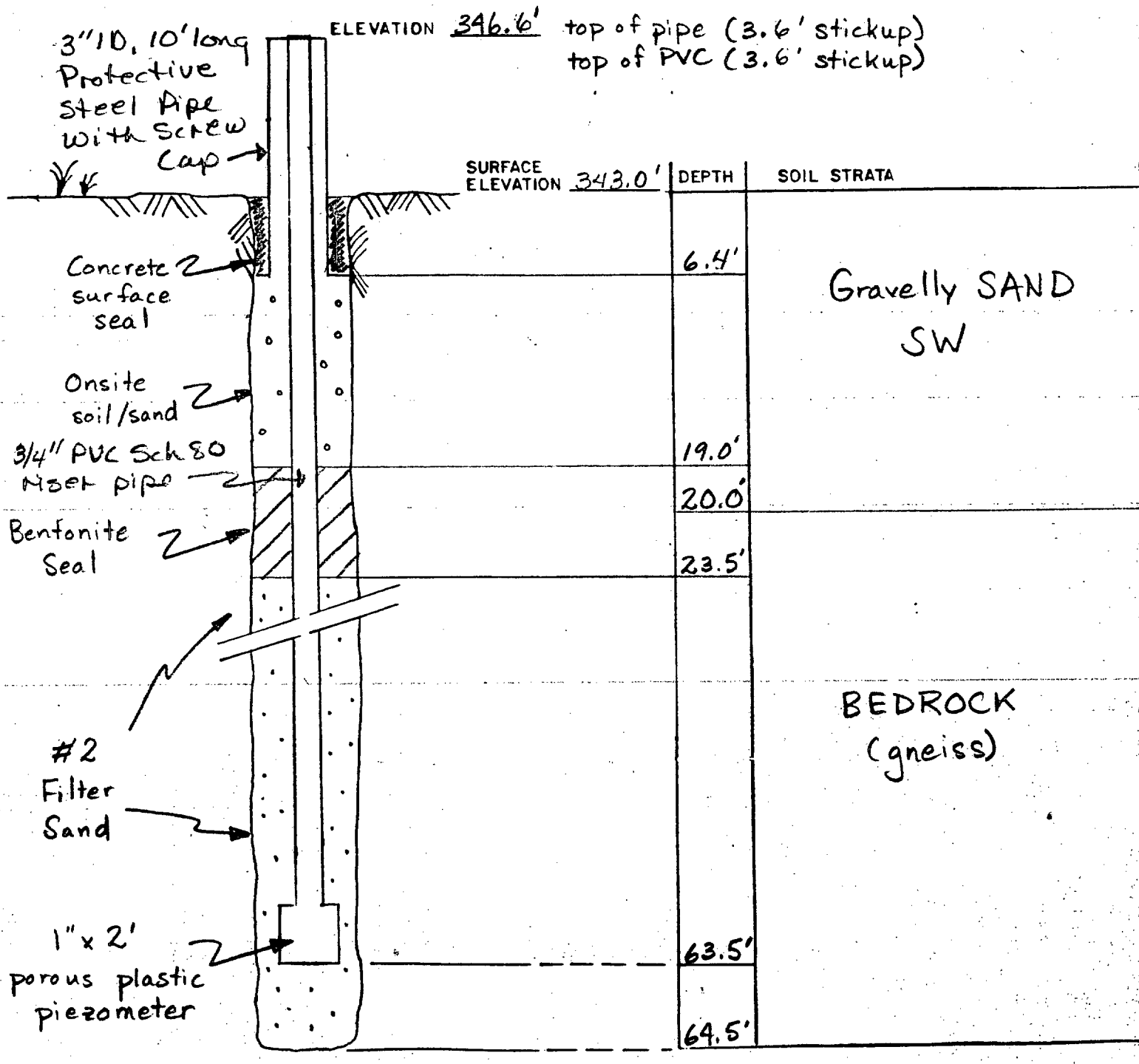

CORPS OF ENGINEERS, U. S. ARMY
NEW ENGLAND DIVISION
FOUNDATION AND MATERIALS BRANCH

FIELD LOG OF TEST BORING

PROJECT NO. D.O. #0014

Site: Hop Brook Dam, CT

Page 1 of 9 Pages

Hole No. FD86-14 Diam. (Casing) 4"

Boring Started: 24 Sept 86

Co-ordinates: STA 3+97 OFF 162' D/S

Boring Completed: 29 Sept 86

Drilled by: Todd, Saarinen, Cambridge

Report Submitted: 10 Oct 86

Purpose of Exploration: install piezometers to determine hydrologic characteristics of foundation of dam.

Elevation Top of Hole: 319.6 M.S.L.

Total Overburden Drilled: 49.0 Feet

Elevation Top of Rock: 270.6 M.S.L.

Elevation Bottom of Hole: 265.6 M.S.L.

Total Rock Drilled: 5.0 Feet

Total Depth of Hole: 54.0 Feet

Core Recovered: 90.0 %

Core Recovered: 4.5 Ft.: Diam. 2 1/8 In.

Soil Samples: 2 3/8 In. Diam. 9 No.

Soil Samples: — In. Diam. — No.

Casing Left in Place: 10 Total Feet
5.2' Stickup

Water Table Depth: 35.7'

Depth From	Depth To	Method of Drilling and Type of Bit Used
0.0	7.5	3" ID diamond core using water
7.5	20.0	3 7/8" OD wet rotary drilling using water
20.0	34.0	3 7/8" OD wet rotary drilling using clear mud
34.0	35.0	3 7/8" OD wet rotary drilling using water
35.0	40.0	NX diamond core using water
40.0	49.0	3 7/8" OD wet rotary drilling using water
49.0	54.0	NX diamond core using water

INDEX

Ground Water — Back of Page 8
Boring Location Sketch — Back of Page 8
Overburden Record — Page 2-5
Rock Drilling — Page 5-6
Piezometer Installation Report — Page 7
Monitoring Well Installation Detail — Page 9
— Page

Prepared by: Douglas R. Ferris (Field Data) — (Lab Data)

Submitted by: Atlantic Testing Labs, Ltd

NED FORM DEC 63 121

REPLACES EDITION OF JUN 51 WHICH MAY BE USED UNTIL EXHAUSTED

U. S. ARMY
CORPS OF ENGINEERS
NEW ENGLAND DIVISION

FIELD LOG OF TEST BORING

Site: Hop Brook Dam, CT — Page 2 of 9 Pages

Boring No. FD86-14 Desig. F Diam. (Casing) 4"

Co-ordinates: ~~N~~ STA 3+97 ~~E~~ OFF 162' D/S

Elevation Top of Boring 319.6 M.S.L.
Total Overburden Drilled 49.0 Feet
Elevation Top of Rock 270.6 M.S.L.
Total Rock Drilled 5.0 Feet
Elevation Bottom of Boring 265.6 M.S.L.
Total Depth of Boring 54.0 Feet
Core Recovered 90.0% No. Boxes 1
Core Recovered 4.5 Ft. ____ Diam. 2 1/8 In.
Soil Samples 2 3/8 In. Diam. 9 No.
Soil Samples — In. Diam. — No.

Hammer Wt. 300# Boring Started 24 SEPT 86
Hammer Drop 18"
Casing Left 10' 3" Boring Completed 29 Sept 86
Subsurface Water Data ____ Page 8
Obs. Well 3/4"
Drilled By Todd, Saarinen, Cambridge
Mfg. Des. Drill Skid mounted CME 45
Inspected By: D. R. Ferris
Classification By: D. R. Ferris
Classification By: —

DEPTH 0'	DEPTH 1"=2'	CORE/SAMPLE NO.	SIZE	~~DEPTH RANGE~~ REC	~~BLOWS PER 6" BORE DEPTH~~	SAMPLING AND CORING OPERATIONS	CLASSIFICATION OF MATERIALS
						3" ID diamond core using water, 0-7.5' Breakthrough @ 7.5'	Boulders (gneiss) No sample retained
7.5'						End of explorations 9/24/86	
						Explorations continue 9/25/86 Drive 4" casing to 7.5' using 300# hammer. 3 7/8" OD wet rotary drilling to 10' using water.	
10.0'							

GENERAL REMARKS:
Elevations as surveyed by ATL.
Piezometer tip set at 47.0'.

Site	Boring No.	Page 3 of 9
Hop Brook Dam, CT	FD86-14	

DEPTH		CORE/SAMPLE NO.	SIZE	REC	BLOWS PER 6"	6" SAMPLING AND CORING OPERATIONS	CLASSIFICATION OF MATERIALS
10.0'	1' 2'						
11.5'		S-1	2 3/8"	90%	81 100/4"	Drive 4" casing to 10' using 300# hammer.	Difficult sampling due to cobbles/coarse gravel. Medium brown c-mf SAND and cmf GRAVEL, trace SILT (wet, nonplastic) dense SP
15.0'						Cleanout with roller bit to 10'. Sample at 10' using 2 3/8" ID split spoon sampler. 3 7/8" OD wet rotary drilling to 15'.	
16.5'		S-2	2 3/8"	20%	24 23 21	Drive casing to 15'. Cleanout with roller bit. Sample	Brown c-mf GRAVEL and cmf SAND, trace SILT (wet, non-plastic) mod. dense GP
20.0'						Drill to 20' Drive casing to 20' Cleanout with roller bit.	
21.5'		S-3	2 3/8"	30%	23 25 50	Sample	Greyish brown c-mf+ GRAVEL, and c-mf SAND, trace SILT (wet, nonplastic) mod. dense GP
23.0'						Drill to 23' using Clear Mud.	
25.0'		S-4	2 3/8"	50%	37 56 35 42	Sample Drill to 25'	Greyish brown c-mf+ SAND and cmf GRAVEL, trace SILT (moist, nonplastic) mod. dense SP
27.0'		S-5	2 3/8"	40%	25 37 57 68	Sample Drill to 27'	Similar soils - SP

Site	Boring No.	Page 4 of 9
Hop Brook Dam, CT	FD86-14	

DEPTH		CORE/SAMPLE NO.	SIZE	~~DEPTH RANGE~~ REC	BLOWS PER 6" ~~CORE RECVY~~	SAMPLING AND CORING OPERATIONS	CLASSIFICATION OF MATERIALS
27.0'	1" = 2'						
		S-6	2 3/8"	REC 40%	111 68 26 43	Sample using 2 3/8" ID split spoon sampler	Similar soils - Brown; wet SP
29.0'						Drill to 30' due to presence of boulder. (3 7/8" OD. wet rotary drilling using clear mud).	
30.0'							
		S-7	2 3/8"	60%	22 26 25 26	Sample Drill to 32'	Similar soils SP
32.0'							
		S-8	2 3/8"	30%	65 66 71 93	Sample	Similar soils some GRAVEL; SP
34.0'						End of explorations 9/25/86	
34.3'		S-9	2 3/8"	100%	120/3" BOUNCE	Explorations continue 9/26/86	Brown c-m&f GRAVEL, little c-m&f SAND, trace SILT (wet, nonplastic) dense GP
35.0'						Drill to 34' using water, due to cobbles. Sample	
		R-1	2 1/8"	40%		Due to coarse gravel/cobbles, drill to 35'. NX diamond core using water to 40'.	Possible bedrock @ 35'. Boulders/cobbles encountered. Sample placed in Core Box.
40.0'							
						Sample attempts yield bouncing refusals. Alternating sampling with 3 7/8" OD rotary drilling using water	Assumed sandy boulders and cobbles
44'							

Site	Boring No.	Page 5 of 9
Hop Brook Dam, CT	FD86-14	

DEPTH		CORE/SAMPLE NO.	SIZE	DEPTH RANGE	BLOWS PER FT. / CORE REC'VY	SAMPLING AND CORING OPERATIONS	CLASSIFICATION OF MATERIALS
44.0'	1" 2"					Attempt to sample using ⊖ 3/8" ID split spoon samplet. Sample attempts yeild bouncing refusals. 3 7/8" OD wet rotary drilling using water.	assumed sandy boulders and cobbles
49.0'		R-2	2 1/8"	49.0 54.0	90%	NX diamond core using water coring operation easy	Bedrock at 49.0' Run # 2: black/white gneiss 14 pieces 22 chips & fragments RQD = 37%
54.0'						Boring Terminated at 9/26/86 Piezometer Tip set at 47.0' 9/26/86	

FIELD LOG OF TEST BORING IN ROCK

SITE Hop Brook Dam, CT ROLE NO. FD86-14 PAGE 6 of 9

DATE	DEPTH PT. FROM	DEPTH PT. TO	RUN PT.	RUN REC'V'Y PT.	REC'V'Y %	DRILLING BEHAVIOR: FEED	DRILLING BEHAVIOR: WATER	DRILLING BEHAVIOR: REASON FOR PULL	ACTUAL DRILLING TIME	BIT NO. SIZE AND TYPE	ADDITIONAL REMARKS
9/26/86	35.0	40.0	5.0	2.0	40	Medium	No water loss	5' run	30 min.	NX diamond	Cobble / coarse gravel. Weathered.
9/26/86	49.0	54.0	5.0	4.5	90%	Medium	No water loss	5' run	60 min	NX diamond	Run # 2 - only bedrock sample taken - fractures are altered.

TOTAL BED ROCK DRILLED 5.0 FEET

TOTAL BED-ROCK RECOVERED 4.5 FEET

BED ROCK RECOVERY 90% PERCENT

DRILLER Todd, Saavinen & Cambridge

INSPECTOR D. Ferris

NED FORM DEC 63 130

REPLACES EDITION OF APR 63 WHICH MAY BE USED UNTIL EXHAUSTED

PIEZOMETER INSTALLATION REPORT

PROJECT: Hop Brook Dam, CT | DATE: 9/26/86

LOCATION (STA): 3+97 | OFFSET FROM CENTER LINE: 162' D/S | PIEZ NO.: FD86-14

PIEZ TYPE: 1" ID x 2' porous plastic | DEPTH OF PIEZ: 47.0 | RISER PIPE DIAM: 3/4" Sch 80

PIEZ TIP SET IN (SOIL TYPE): assumed cobbly GP | SOIL SAMPLE NO.: S-9* | BORING DIAM: 4"

METHOD OF INSTALLATION: 3 7/8" wet rotary drilling using water

TYPE OF PROTECTION FOR PIEZ: 10' long steel pipe (3" ID) | VENT: 1/8" hole in screw cap

GROUND ELEV.: 319.6 | ELEV. TOP OF RISER: 324.6' | ELEV PIEZ TIP: 272.6'

FILTER: #2 sand | FROM ELEV: 265.6' | TO ELEV: 308.6'

SEAL: 3/8" bentonite pellets | FROM ELEV: 308.6' | TO ELEV: 312.6'

INSTALLED BY: Todd, Saarinen, Cambridge | CONTRACT NO.: DACW 33-85-D-0011 | FOREMAN: T.A. Beddoe

DATE OF INSTALLATION: 9/26/86 - 9/29/86 | DATE OF OBSERVATIONS: 9/30/86

METHOD OF TESTING PIEZ.: Falling Head Test

TIME	ELAPSED TIME MINUTES	DEPTH TO WATER FEET**	TIME	ELAPSED TIME MINUTES	DEPTH TO WATER FEET	TIME	ELAPSED TIME MINUTES	DEPTH TO WATER FEET
	Before test	39.8		30	38.0'			
	0***	0						
	1	25.1'						
	5	36.8'						
	10	37.6'						

REMARKS: * unable to obtain sample from piez. tip location due to bouncing refusal on cobbles and boulders. S-9 is the most representative sample.

** Depth to water from top of PVC (5.0' stickup)

*** Test began when water level was at top of PVC.

D. Ferris, ~~T.A. Beddoe~~
INSPECTOR

Site: Hop Brook Dam, CT
Boring No: FD86-14

SUBSURFACE WATER OBSERVATIONS

DATE	TIME	DEPTH-BOT. OF CASING	DEPTH-BOT. OF BORING	DEPTH TO WATER	ELEVATION WATER	REMARKS
9/29/86	17:16	—	54.0	34.7'	284.9'	casing pulled
9/30/86	8:00	—	54.0	34.8'	284.8'	casing pulled

Note: Depths are in feet below original ground (elev. 319.6')

BORING LOCATION SKETCH

Not-to-scale

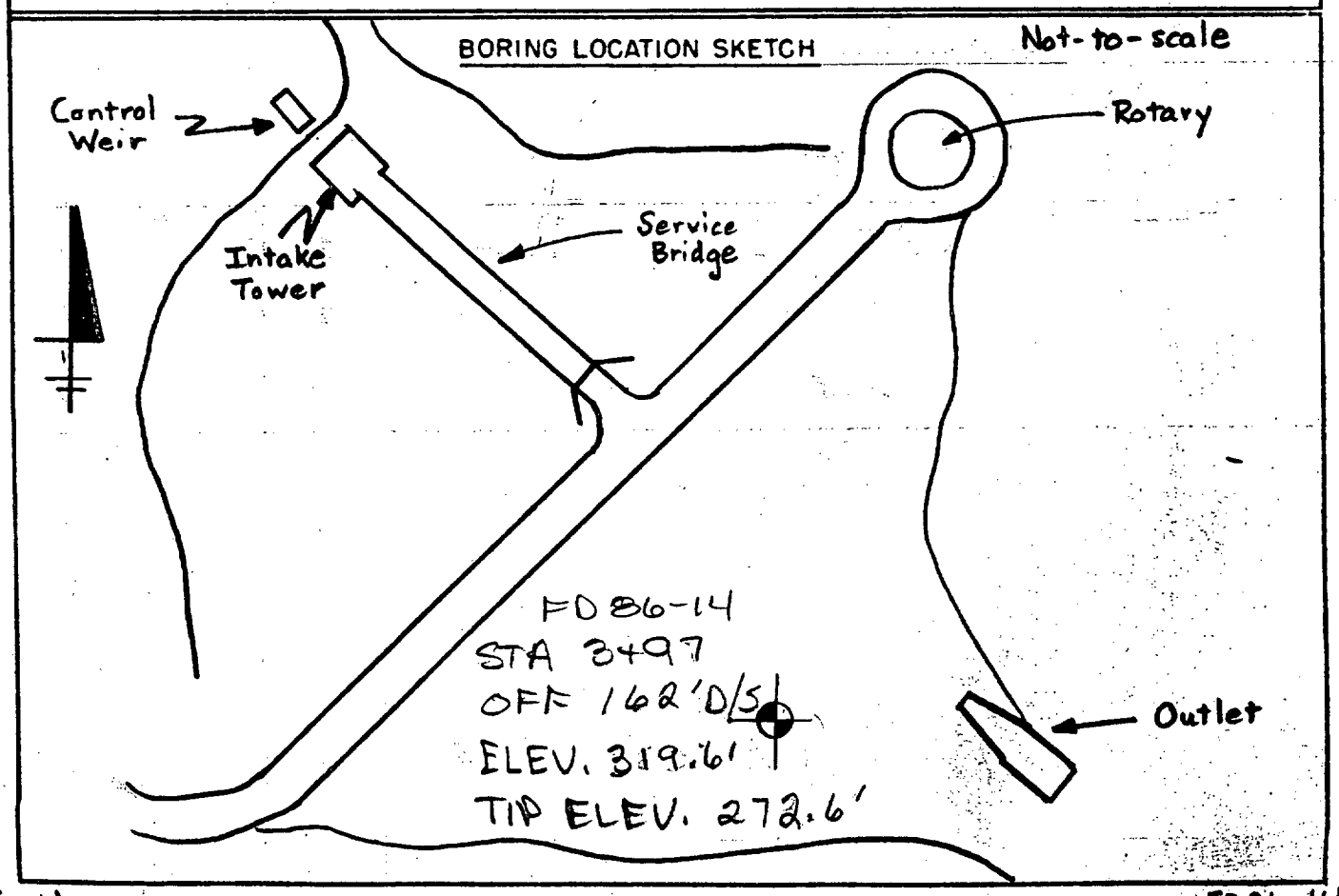

ATLANTIC TESTING LABORATORIES, LIMITED

MONITORING WELL INSTALLATION DETAIL

PROJECT: Hop Brook Dam, CT D.O.# 0014 **PROJECT NO.** CD017

CLIENT: USACE, NED **WELL NO.** FD86-14

ELEVATION 324.8' top of pipe (5.2' stickup)
324.6' top of PVC (5.0' stickup)

SURFACE ELEVATION 319.6

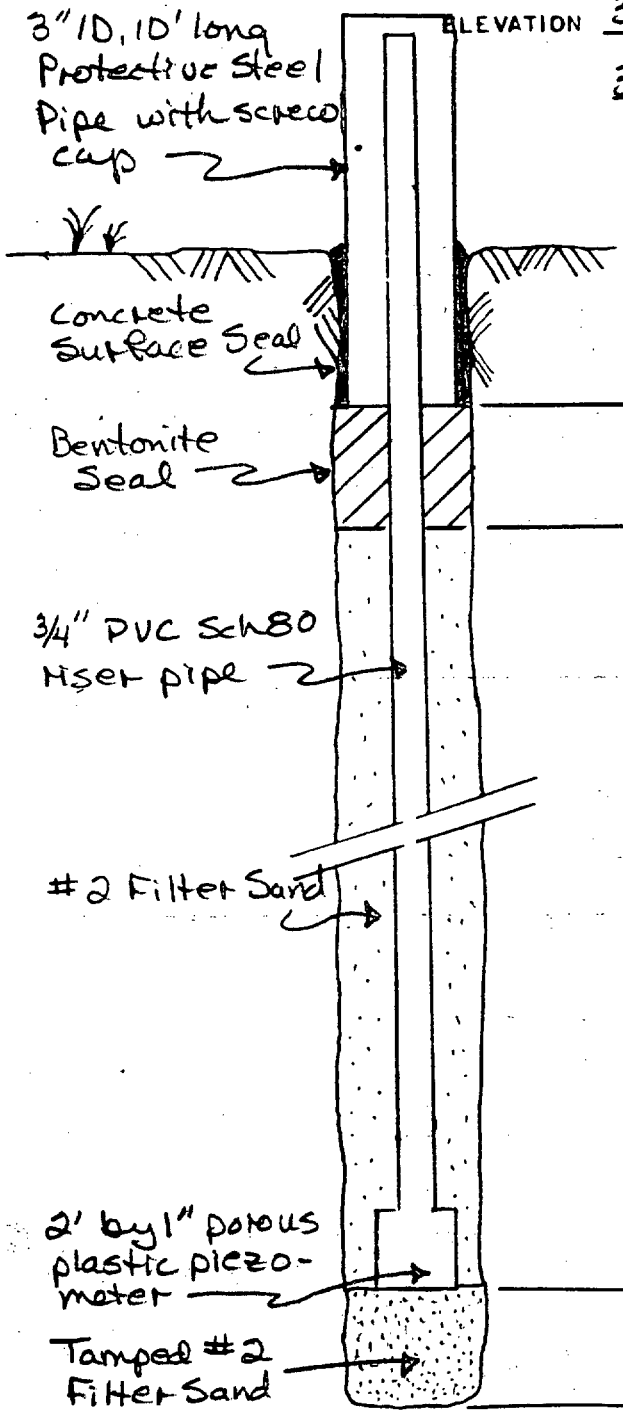

DEPTH	SOIL STRATA
4.8'	Boulders (gneiss)
7.5'	
11.0'	Sandy Gravel and Gravelly Sand GP, SP
35.0'	
47.0'	Sandy Boulders and Cobbles
49.0'	
54.0'	Bedrock (gneiss)

SECTION 9

Other Records Taken

a. Control Point Sketch

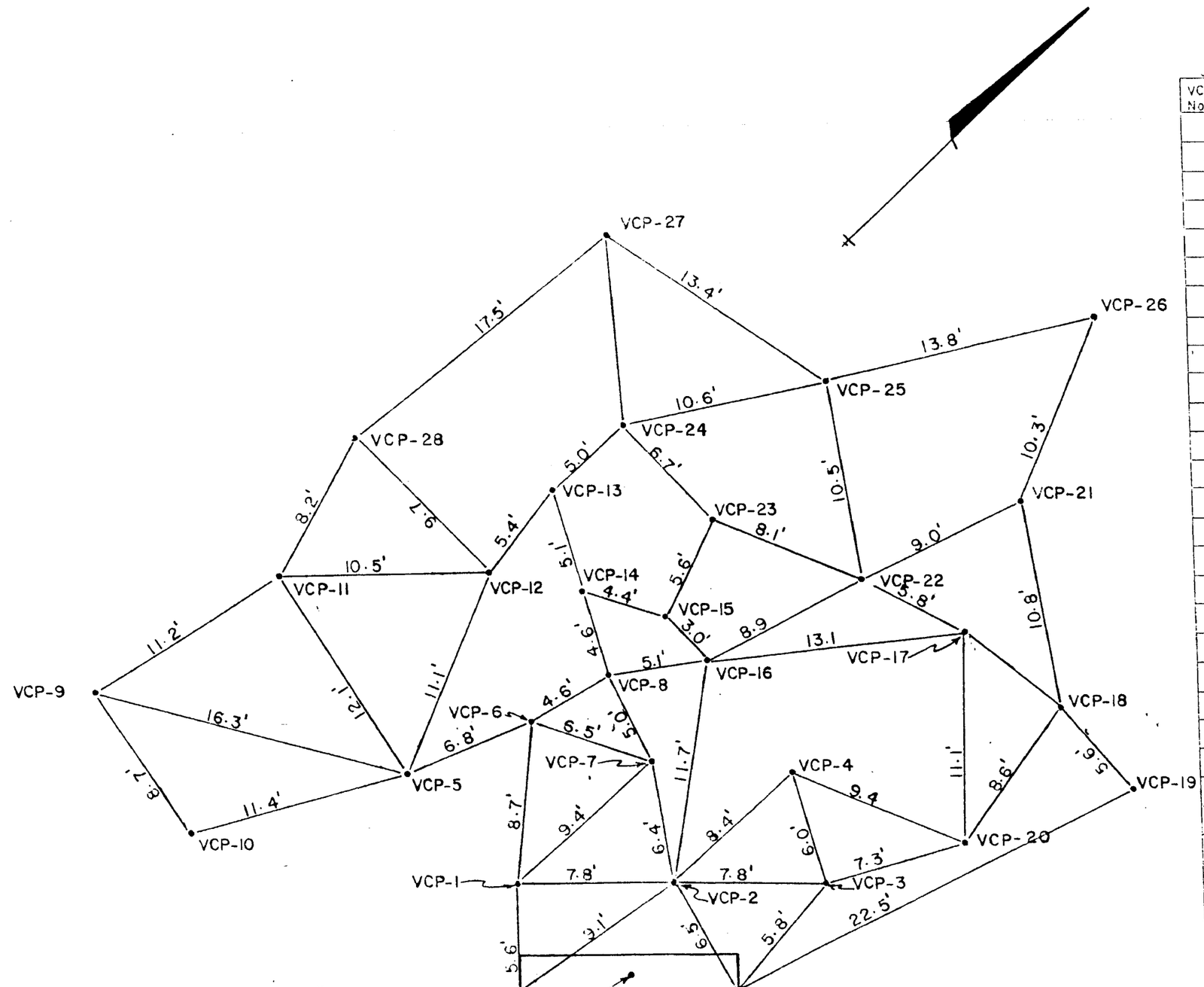

VERTICAL CONTROL POINT ELEVATIONS

VCP No.	OCTOBER		DECEMBER		FEBRUARY	
1	297.47					
2	298.44					
3	298.17					
4	300.12					
5	300.59					
6	301.18					
7	300.08					
8	301.82					
9	302.00					
10	299.00					
11	304.95					
12	305.10					
13	306.52					
14	304.71					
15	303.27					
16	302.03					
17	301.72					
18	302.81					
19	302.76					
20	298.21					
21	306.95					
22	305.26					
23	306.56					
24	308.27					
25	309.79					
26	311.30					
27	312.26					
28	308.40					

CONTRACT No. DACW 33-85-D-0011
DELIVERY ORDER No. 0014

BM. 1/2" DRILL HOLE TOP OF CONCRETE HEADWALL OUTLET STRUCTURE ELEV. 297.83
THIS BM WAS SET USING BM No. 4 ON TOP OF THE DAM REFERENCE ELEV. 380.93

CONTROL POINT SKETCH HOPBROOK DAM HOPBROOK LAKE, CONN.	DATE 10-06-86
PROJECT NUMBER CD-01-017-86	SCALE 1" = 6'

ATLANTIC TESTING LABORATORIES, Limited
P.O. BOX 29, CANTON, NEW YORK (315) 386-4578
CICERO, N.Y. ENDICOTT, N.Y. BURLINGTON, VT. MANCHESTER, N.H.

b. Hop Brook Lake Pool Elevations

The following Hop Brook Lake pool elevations were provided by the Corp
Engineers.

DATE	TIME	POOL ELEVATION (ft)
8-3-86	8:18	311.25
8-4-86	6:01	311.07
8-5-86	5:53	310.98
8-6-86	7:32	310.91
8-7-86	6:53	310.89
8-8-86	4:43	310.89
8-11-86	12:35	311.07
8-12-86	4:43	310.94
8-13-86	3:39	310.85
8-14-86	8:46	310.71
8-15-86	4:12	310.61
8-16-86	5:04	310.49
8-17-86	6:39	310.36
8-18-86	8:45	312.04
8-19-86	3:45	311.30
8-20-86	9:34	311.07
8-21-86	5:16	311.03
8-22-86	3:11	311.45
8-23-86	2:33	311.14
8-24-86	1:39	311.03
8-25-86	5:38	311.00
8-26-86	9:12	310.94
8-27-86	4:33	310.89
8-28-86	5:01	310.89
8-30-86	9:22	310.89
8-31-86	6:32	310.87
9-1-86	8:17	310.85
9-2-86	3:00	310.82
9-3-86	9:35	310.63
9-4-86	5:49	310.45
9-5-86	10:20	310.31
9-6-86	4:15	310.36
9-7-86	3:00	310.40
9-8-86	14:06	310.36
9-9-86	4:24	310.34
9-10-86	3:52	310.25
9-11-86	15:38	310.09
9-12-86	6:14	310.04
9-13-86	4:43	309.98
9-14-86	8:49	309.84
9-15-86	6:00	309.77
9-16-86	4:13	309.68
9-17-86	5:47	309.89
9-18-86	9:17	309.89
9-19-86	9:33	309.82
9-20-86	5:55	309.77
9-21-86	2:53	309.71
9-22-86	10:04	309.71
9-23-86	3:43	309.73
9-24-86	5:32	309.89
9-25-86	1:44	309.98
9-26-86	10:03	310.00
9-27-86	4:50	310.16
9-29-86	9:37	310.25