CONNECTICUT RIVER BASIN
WINCHENDON, MASSACHUSETTS

HUNTS POND DAM
MA 00634

PHASE I INSPECTION REPORT
NATIONAL DAM INSPECTION PROGRAM

The original hardcopy version of
contains color photographs and/or drawings
For additional information on this report
please email

U.S. Army Corps of Engineers
New England District
Email: Library@nae02.usace.army.mil

DEPARTMENT OF THE ARMY
NEW ENGLAND DIVISION, CORPS OF ENGINEERS
WALTHAM, MASS. 02154

DECEMBER 1979

UNCLASSIFIED
RITY CLASSIFICATION OF THIS PAGE (When Data Entered)

REPORT DOCUMENTATION PAGE

READ INSTRUCTIONS BEFORE COMPLETING FORM

EPORT NUMBER
MA 00634

2. GOVT ACCESSION NO.

3. RECIPIENT'S CATALOG NUMBER

ITLE (and Subtitle)
Hunts Pond Dam
TIONAL PROGRAM FOR INSPECTION OF NON-FEDERAL
MS

5. TYPE OF REPORT & PERIOD COVERED
INSPECTION REPORT

6. PERFORMING ORG. REPORT NUMBER

UTHOR(s)
S. ARMY CORPS OF ENGINEERS
W ENGLAND DIVISION

8. CONTRACT OR GRANT NUMBER(s)

ERFORMING ORGANIZATION NAME AND ADDRESS

10. PROGRAM ELEMENT, PROJECT, TASK AREA & WORK UNIT NUMBERS

CONTROLLING OFFICE NAME AND ADDRESS
PT. OF THE ARMY, CORPS OF ENGINEERS
W ENGLAND DIVISION, NEDED
4 TRAPELO ROAD, WALTHAM, MA. 02254

12. REPORT DATE
December 1979

13. NUMBER OF PAGES
80

MONITORING AGENCY NAME & ADDRESS(if different from Controlling Office)

15. SECURITY CLASS. (of this report)
UNCLASSIFIED

15a. DECLASSIFICATION/DOWNGRADING SCHEDULE

DISTRIBUTION STATEMENT (of this Report)
PROVAL FOR PUBLIC RELEASE: DISTRIBUTION UNLIMITED

DISTRIBUTION STATEMENT (of the abstract entered in Block 20, if different from Report)

SUPPLEMENTARY NOTES
ver program reads: Phase I Inspection Report, National Dam Inspection Program; wever, the official title of the program is: National Program for Inspection of n-Federal Dams; use cover date for date of report.

KEY WORDS (Continue on reverse side if necessary and identify by block number)
DAMS, INSPECTION, DAM SAFETY,

Connecticut River Basin
Winchendon, Massachusetts
Millers River, Tributary of the Connecticut River.

ABSTRACT (Continue on reverse side if necessary and identify by block number)

The dam is a 184 ft.long concrete dam with a maximum height of 16 ft. There are deficiencies which must be corrected to assure the continued performance of the dam. Generally the dam is considered to be in fair to good condition. It is small in size having a significant hazard potential.

DEPARTMENT OF THE ARMY
NEW ENGLAND DIVISION, CORPS OF ENGINEERS
424 TRAPELO ROAD
WALTHAM, MASSACHUSETTS 02154

REPLY TO
ATTENTION OF
NEDED

MAR 06 1980

Honorable Edward J. King
Governor of the Commonwealth of
Massachusetts
State House
Boston, Massachusetts 02133

Dear Governor King:

Inclosed is a copy of the Hunts Pond Dam Phase I Inspection Report, which was prepared under the National Program for Inspection of Non-Federal Dams. This report is presented for your use and is based upon a visual inspection, a review of the past performance and a brief hydrological study of the dam. A brief assessment is included at the beginning of the report. I have approved the report and support the findings and recommendations described in Section 7 and ask that you keep me informed of the actions taken to implement them. This follow-up action is a vitally important part of this program.

A copy of this report has been forwarded to the Department of Environmental Quality Engineering, the cooperating agency for the Commonwealth of Massachusetts. In addition, a copy of the report has also been furnished the owner, Mason & Parker Manufacturing Company, Winchendon, Massachusetts.

Copies of this report will be made available to the public, upon request, by this office under the Freedom of Information Act. In the case of this report the release date will be thirty days from the date of this letter.

I wish to take this opportunity to thank you and the Department of Environmental Quality Engineering for your cooperation in carrying out this program.

Sincerely,

MAX B. SCHEIDER
Colonel, Corps of Engineers
Division Engineer

Incl
As stated

HUNTS POND DAM

MA 00634

CONNECTICUT RIVER BASIN
WINCHENDON, MASSACHUSETTS

PHASE I INSPECTION REPORT
NATIONAL DAM INSPECTION
PROGRAM

NATIONAL DAM INSPECTION
PROGRAM

PHASE I INSPECTION REPORT

BRIEF ASSESSMENT

Identification No.: MA00634

Name of Dam: Hunts Pond

Town: Winchendon

County and State: Worcester County, Massachusetts

Stream: Millers River, tributary of the Connecticut River

Date of Inspection: September 29, 1979

Hunts Pond Dam is a 184-foot long concrete dam built in 1936. The dam has a maximum height of 16 feet and consists of a spillway, outlet structure, and retaining walls at the north and south ends of the dam. The top of the dam (retaining walls) is at elevation (El) 956.1. The spillway is a concrete ogee weir 97 feet long with the crest at El 947.8. There are 12 bays of stoplogs on the spillway. The stoplogs have a total combined length of 90 feet and are at El 952.0. A steel framework on the top of the dam holds the stoplogs in place. A mechanism for releasing the stoplogs is accessible from the framework. The outlet is 9.2 feet wide by 10.5 feet high and is controlled by a wooden slide gate adjacent to the spillway. The invert of the slide gate is at El 942.3.

There are deficiencies which must be corrected to assure the continued performance of this dam. This conclusion is based on the visual inspection of the site and a review of the available data. Generally, the dam is in fair to good condition.

The following deficiencies were observed at the site: lack of suitable access to operate the stoplogs; spalling and/or cracking of the concrete at several locations on the dam, spillway, and outlet struc-

ture; slight seepage next to the south sidewall of the spillway; insufficient earth fill along the south reaining wall; and trees and brush growing on the top and downstream slope of the dam along the south retaining wall.

Based on Corps of Engineers' guidelines, the dam has been classified in the "small" size and "significant" hazard categories. A test flood equal to one-half the probable maximum flood (PMF) was used to evaluate the capacity of the spillway. The drainage area for Hunts Pond is 54 square miles. The test flood inflow is calculated to be 18,900 cubic feet per second (cfs). The test flood outflow is 18,800 cfs, resulting in the pond at El 961.6 assuming that the stoplogs on the spillway are released. The test flood would overtop a low area adjacent to the north abutment of the dam by 7.2 feet and would overtop the dam by 5.5 feet. Hydraulic analyses indicate that the spillway without stoplogs can discharge 4900 cfs or 26 percent of the test flood outflow before the low area is overtopped. With stoplogs, the spillway can discharge 1030 cfs or 5 percent of the outflow before the low area is overtopped. There is no means of significantly increasing the discharge capacity of the spillway.

It is recommended that the Owner employ a qualified engineer to design a suitable means of access to operate the stoplogs at the dam. The Owner should also establish a definite procedure for gradual release of the stoplogs during storms. A plan should be established for surveillance of the dam during storms and for notifying people in downstream areas in case of an emergency at the dam or before releasing the stoplogs. The Owner should also repair the deficiencies listed above, as described in Section 7.3, and conduct monthly maintenance and biennial technical inspections of the dam.

The measures outlined above and in Section 7 should be implemented by the Owner within a period of one year after receipt of this Phase I Inspection Report.

Edward M. Greco, P.E.
Project Manager
Metcalf & Eddy, Inc.

Massachusetts Registration
No. 29800

Approved by:

Stephen L. Bishop, P.E.
Vice President
Metcalf & Eddy, Inc.

Massachusetts Registration
No. 19703

This Phase I Inspection Report on Hunts Pond Dam has been reviewed by the undersigned Review Board members. In our opinion, the reported findings, conclusions, and recommendations are consistent with the Recommended Guidelines for Safety Inspection of Dams, and with good engineering judgment and practice, and is hereby submitted for approval.

ARAMAST MAHTESIAN, MEMBER
Foundation & Materials Branch
Engineering Division

CARNEY M. TERZIAN, MEMBER
Design Branch
Engineering Division

RICHARD DIBUONO, CHAIRMAN
Water Control Branch
Engineering Division

APPROVAL RECOMMENDED:

JOE B. FRYAR
Chief, Engineering Division

PREFACE

This report is prepared under guidance contained in Recommended Guidelines for Safety Inspection of Dams, for a Phase I Investigation. Copies of these guidelines may be obtained from the Office of Chief of Engineers, Washington, D.C. 20314. The purpose of a Phase I Investigation is to identify expeditiously those dams which may pose hazards to human life or property. The assessment of the general condition of the dam is based upon available data and visual inspections. Detailed inveseigations, and analyses involving topographic mapping, subsurface investigations, testing, and detailed computational evaluations are beyond the scope of a Phase I investigation; however, the investigation is intended to identify any need for such studies.

In reviewing this report, it should be realized that the reported condition of the dam is based on observations of field conditions at the time of inspection along with data available to the inspection team. In cases where the reservoir was lowered or drained prior to inspection, such action, while improving the stability and safety of the dam, removes the normal load on the structure and may obscure certain conditions which might otherwise be detectable if inspected under the normal operating environment of the structure.

It is important to note that the condition of a dam depends on numerous and constantly changing internal and external conditions, and is evolutionary in nature. It would be incorrect to assume that the present condition of the dam will continue to represent the condition of the dam at some point in the future. Only through continued care and inspection can there be any chance that unsafe conditions will be detected.

Phase I inspections are not intended to provide detailed hydrologic and hydraulic analyses. In accordance with the established Guidelines, the Spillway Test Flood is based on the estimated "Probable Maximum Flood" for the region (greatest reasonably possible storm runoff), or fractions thereof. Because of the magnitude and rarity of such a storm event, a finding that a spillway will not pass the test flood should not be interpreted as necessarily posing a highly inadequate

condition. The test flood provides a measure of relative spillway capacity and serves as an aid in determining the need for more detailed hydrologic and hydraulic studies, considering the size of the dam, its general conditions and the downstream damage potential.

TABLE OF CONTENTS

	Page
BRIEF ASSESSMENT	
PREFACE	
OVERVIEW PHOTO	iii
LOCATION MAP	iv
MAP OF FLOOD IMPACT AREA	v
REPORT	
SECTION 1 - PROJECT INFORMATION	1
1.1 General	1
1.2 Description of Project	2
1.3 Pertinent Data	6
SECTION 2 - ENGINEERING DATA	10
2.1 General	10
2.2 Construction Records	10
2.3 Operating records	10
2.4 Evaluation	10
SECTION 3 - VISUAL INSPECTION	12
3.1 Findings	12
3.2 Evaluation	14
SECTION 4 - OPERATING PROCEDURES	15
4.1 Procedures	15
4.2 Maintenance of Dam	15
4.3 Maintenance of Operating Facilities	15
4.4 Description of Any Warning System in Effect	15
4.5 Evaluation	16
SECTION 5 - HYDRAULIC/HYDROLOGIC	17
5.1 Evaluation of Features	17

TABLE OF CONTENTS (Continued)

	Page
SECTION 6 - STRUCTURAL STABILITY	22
6.1 Evaluation of Structural Stability	22
SECTION 7 - ASSESSMENT, RECOMMENDATIONS, AND REMEDIAL MEASURES	24
7.1 Dam Assessment	24
7.2 Recommendations	25
7.3 Remedial Measures	25
7.4 Alternatives	26

APPENDIXES

APPENDIX A - PERIODIC INSPECTION CHECKLIST

APPENDIX B - PLANS OF DAM AND PREVIOUS INSPECTION REPORTS

APPENDIX C - PHOTOGRAPHS

APPENDIX D - HYDROLOGIC AND HYDRAULIC COMPUTATIONS

APPENDIX E - INFORMATION AS CONTAINED IN THE NATIONAL INVENTORY OF DAMS

OVERVIEW
HUNTS POND DAM
WINCHENDON, MASSACHUSETTS

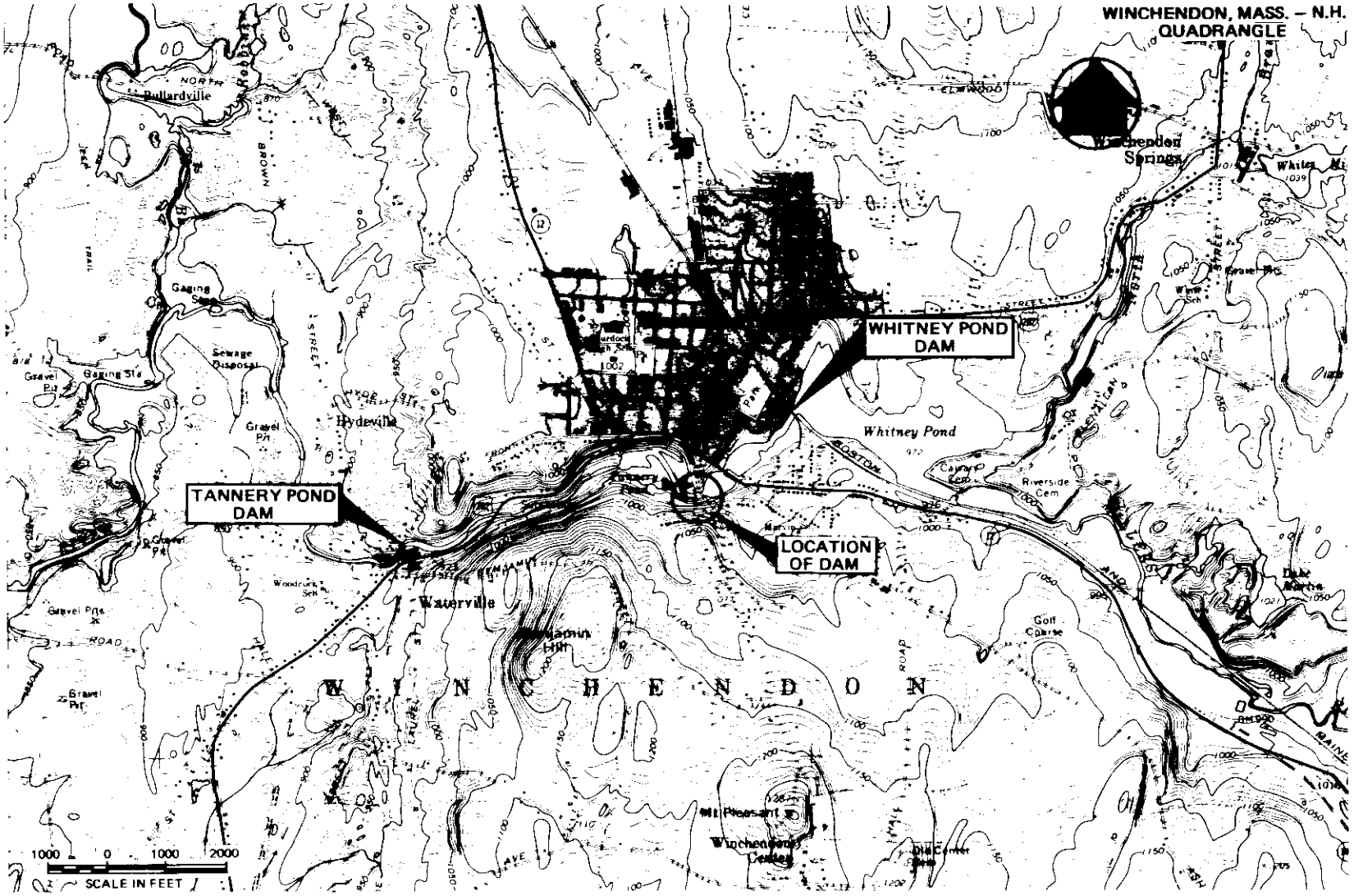

LOCATION MAP – HUNTS POND

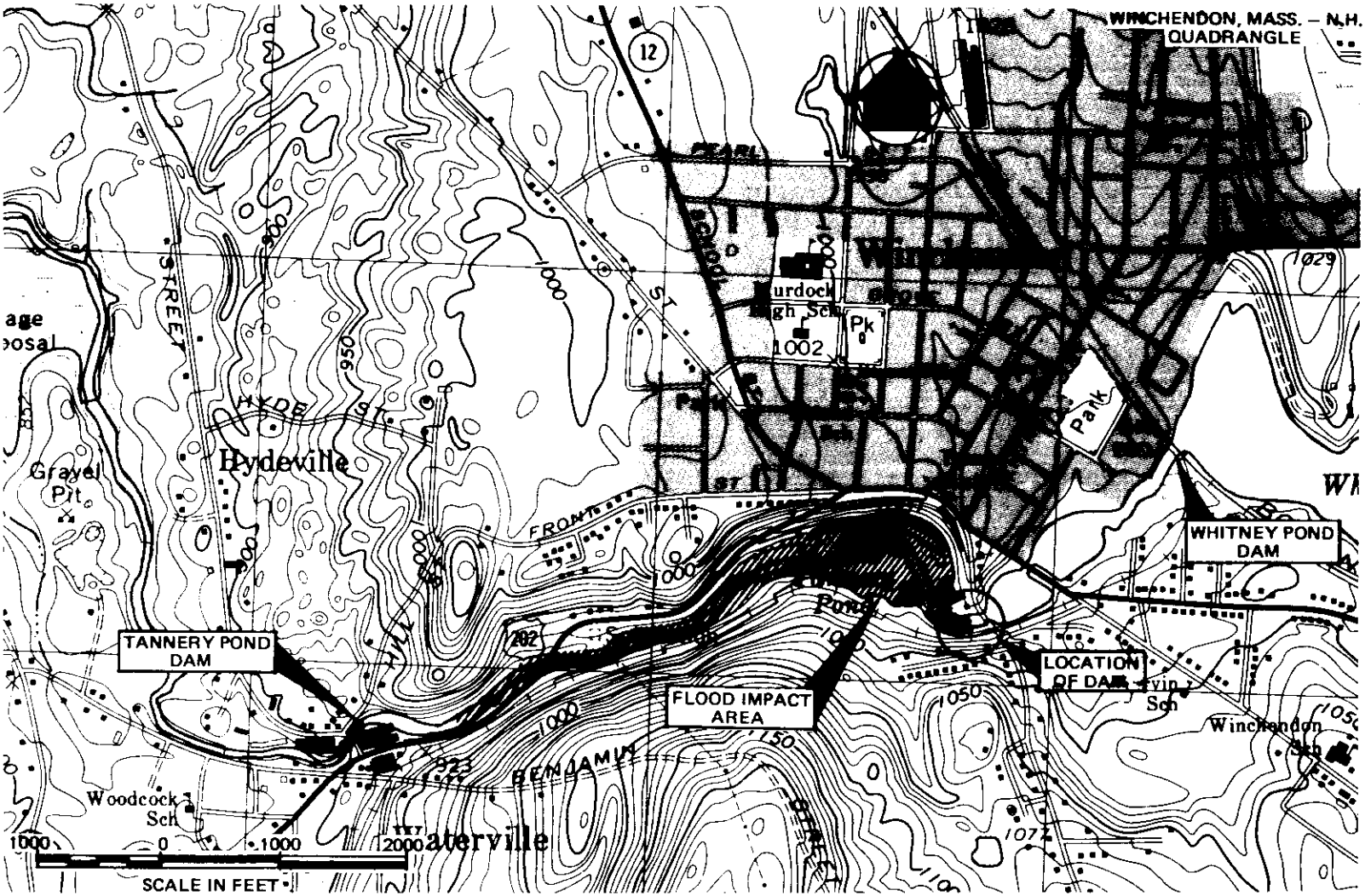

MAP OF FLOOD IMPACT AREA – HUNTS POND DAM

NATIONAL DAM INSPECTION
PROGRAM

PHASE I INSPECTION REPORT

HUNTS POND DAM

SECTION 1

PROJECT INFORMATION

1.1 General

a. Authority. Public Law 92-367, dated August 8, 1972, authorized the Secretary of the Army, through the Corps of Engineers, to initiate a national program of dam inspection throughout the United States. The New England Division of the Corps of Engineers has been assigned the responsibility of supervising the inspection of the dams within the New England Region. Metcalf & Eddy, Inc. has been retained by the New England Division to inspect and report on selected dams in the State of Massachusetts. Contract No. DACW 33-79-C-0054, dated March 27, 1979, has been assigned by the Corps of Engineers for this work.

b. Purpose:

(1) Perform technical inspection and evaluation of non-Federal dams to identify conditions which threaten the public safety and thus permit correction in a timely manner by non-Federal interests.

(2) Encourage and assist the states to initiate quickly effective dam safety programs for non-Federal dams.

(3) Update, verify and complete the National Inventory of Dams.

1.2 Description of Project

a. Location. The dam is located on the Millers River in the Town of Winchendon, Worcester County, Massachusetts (see Location Map). The coordinates of this location are Latitude 42 deg. 40.7 min. north and Longitude 72 deg. 2.9 min. west. Millers River is a tributary of the Connecticut River.

b. Description of Dam and Appurtenances. Hunts Pond Dam is a 184-foot long, 16-foot high concrete dam which consists of a spillway, a low-level outlet, and retaining walls at the north and south ends of the dam (see Figures B-1 through B-3 in Appendix B and photographs in Appendix C).

The spillway is a 97-foot long, ogee-shaped, concrete weir with 12 bays of stoplogs on the crest. The effective length of the weir is 90 feet. The top of the stoplogs is at El 952.0, and the crest of the weir is at El 947.8. A concrete pier is located at the center of the weir, and vertical concrete walls form the sides of the spillway. The pier and sidewalls partially support a steel framework which spans the spillway. The framework contains guiderails for the stoplogs, a mechanism for releasing the stoplogs, and beams for a walkway which has been removed. There are also two vertical steel supports for the framework embedded in the downstream face of the weir. At the toe of the weir, a concrete apron extends approximately 6 feet downstream. The discharge channel is 110 feet wide at the spillway and narrows to 20 feet wide 220 feet downstream. The south side of the channel is a steep earth slope about 9 feet high. The north side of the channel is a vertical wall made of concrete and masonry varying from 7 to 9 feet high. The floor of the channel is covered with boulders, gravel, and some bedrock outcrops. The discharge channel makes a sharp bend to the north 220 feet downstream (see Overview Photo and Figure B-1).

Adjacent to the north end of the spillway, there is a concrete outlet structure containing a wooden slide gate. The slide gate controls flow through a 9.2-foot wide by 10.5-foot high opening with an invert at El 942.3. The Owner states that upstream of the slide gate there is a stone-lined depression in the bottom of the pond to drain water toward the outlet. Vertical concrete walls form the upstream headwall and sidewalls of the outlet. A rack and pinion mechanism for operating the slide gate is mounted on a concrete slab over the outlet. Flow through the outlet would discharge into the channel below the spillway.

Vertical concrete retaining walls form the north and south ends of the dam. They are 40 and 32 feet long, respectively, and the tops of the walls are at El 956.1. A drawing of the dam (Figure B-3) shows that these walls extend below the footing of the spillway and serve as cut-off walls. The walls are shown on the drawing as having a maximum height of at least 24 feet. There is also a concrete cut-off wall under the upseream side of the spillway. Earth fill has been placed on the downstream side of the retaining walls to form the top and downstream slopes of the dam. The top of the dam is about 10 feet wide. The downstream slope at the north retaining wall has been filled in with earth to the level of the adjacent parking lot. The downstream slope at the south retaining wall is about 1:1 (horizontal:vertical).

c. Size Classification. Hunts Pond Dam is classified in the "small" category since it has a maximum height of 16 feet and a maximum storage capacity of 120 acre-feet.

d. Hazard Classification. Several factory buildings and a parking area for Mason & Parker Manufacturing Company are located adjacent to the north side of the dam and discharge channel. These buildings are 5 to 6 feet above the stream bed, but the wall along the north side of the channel is 7 to 9 feet high (see photo No. 7).

A factory store is located on the left (west) side of the river about 400 feet downstream of the dam. The foundation of this building is at the elevation of the stream bed (see photo No. 8).

Failure of the dam with the stoplogs in place and with the pond at El 954.4 would produce a flood wave about 10 feet deep as compared to a water depth in the stream of 4 feet prior to failure. If the stoplogs were released, the discharge from the spillway prior to failure would produce a tailwater 10 feet deep, submerging the spillway by 2.2 feet. If failure of the dam occurred in addition to this discharge, the tailwater would rise an additional foot. Under both conditions, it is likely that flooding would result in appreciable property damage and possible loss of a few lives in the factory buildings and store located downstream. For this reason, the dam at Hunts Pond has been classified in the "significant" hazard category.

e. Ownership. The dam is owned by Mason & Parker Manufacturing Company, 28 Front Street, Winchendon, Massachusetts 01475. Mr. Warren Harris, Jr. (telephone 617-297-1500) granted permission to enter the property and inspect the dam.

f. Operator. Personnel from Mason & Parker Manufacturing Company operate the dam.

g. Purpose of Dam. Water from Hunts Pond was formerly used to drive machinery in the factory buildings adjacent to the dam. Recently the Owner has evaluated using the dam for hydroelectric power. At the present time, however, the pond is used for limited recreation. Also, a well has been installed upstream of the south abutment of the dam, so that water from the pond could be used by the Town Fire Department.

h. Design and Construction History. Information on the history of the dam was provided by past inspection reports from the Worcester County Engineering Department (copies in Appendix B) and by conversations with personnel at Mason and Parker Manufacturing Company. The original dam at the site was built before 1700 and repaired in 1921. The earliest description of the structure (Worcester County file card) states that the dam consisted of a rubble wall with a "log-plank rollway" and earth embankments. Water was diverted from the pond to operate machinery in factory buildings located adjacent to the north abutment. During the March 1936 storm, the dam was overtopped by about 3 feet (flood El 954.4) and completely failed.

The present dam was built at approximately the same location in the latter part of 1936. During construction, numerous inspections were made by the Worcester County Engineers. The dam has not been used for power since about 1940, and the canal to divert water to the factories has been filled in. Since 1941, various repairs to the dam were recommended by the Worcester County Engineers. These included placing of additional earthfill at the "east" abutment, placing of quarry stone at the downstream toe of the spillway, and addition of cross struts to reinforce the framework supporting the stoplogs.

In 1978, some repairs were made by the Onwer. Additional concrete was placed along the downstream toe of the spillway, the concrete was repaired on the sidewalls and overhead slab of the outlet structure, and a new wooden slide gate was installed. Also, a wooden walkway over the spillway has been removed.

i. Normal Operating Procedures. There are no normal operating procedures at this dam. Periodically, the release mechanisms for the stoplogs are tested. The slide gate has not been operated since it was installed in 1978.

1.3 Pertinent Data

a. Drainage Area. The 34,700-acre (54 square mile) drainage area extends eastward into the Town of Ashburnham, Massachusetts and northward into the towns of Rindge and New Ipswich, New Hampshire. The land is gently rolling, wooded, and mostly undeveloped. Numerous dams associated with factories and recreational lakes are located upstream of Hunts Pond. There are some homes and cottages built around recreational lakes in the drainage area.

b. Discharge. Normal discharge from Hunts Pond Dam flows over the stoplogs on the spillway and into Millers River. The stoplogs sections are a total of 90 feet long and have a top elevation of 952.0. The discharge channel is 110 feet wide at the dam and narrows to 20 feet wide 220 feet downstream, where the river bends sharply to the north. About 1600 feet downstream of Hunts Pond Dam is Dionne's Dam which impounds Tannery Pond. This dam was used to generate power, but is now abandoned that the outlet gate is collapsing. Below Tannery Pond, the river flows in a narrow valley through the village of Waterville which is located about 1 mile downstream of Hunts Pond Dam. Below Waterville, the valley widens and the river meanders. Eventually, the river reaches the Birch Hill flood control dam located about 8 miles downstream of Hunts Pond Dam.

Hydraulic analyses indicate that the spillway without stoplogs can discharge an estimated flow of 4900 cfs with the pond at El 954.4 (low point upstream of north abutment). With stoplogs, the spillway can discharge 1030 cfs with the pond at El 954.4. The test flood outflow (one-half PMF) is estimated to be 18,800 cfs with the pond at El 961.6 and the stoplogs released. The spillway without stoplogs can discharge 26 percent of this outflow, and with stoplogs the spillway can discharge 5 percent of the outflow. With the stoplogs released, the test flood would overtop the low area by 7.2 feet and overtop the dam by 5.5 feet.

Records from the Worcester County Engineer's office indicate that in the March 1936 storm, the flood level at Hunts Pond reached El 954.4. The dam was overtopped by 3 feet and completely failed (see pages B-4 and B-5). The present dam was built at the same site in the latter part of 1936. On September 22, 1938, a hurricane produced a flood level 6 inches below the top of the retaining wall (El 955.6), as given in a previous inspection report (see page B-20). This caused flooding of the parking area at the north end of the dam. Records from a U.S. Geological Survey gaging station (No. 162000) located 2.5 miles downstream indicate that the September 22, 1938 discharge was the maximum recorded flow since 1916. The flow at the gaging station was 8500 cfs for an 83-square mile drainage area.

c. Elevation (feet above National Geodetic Vertical Datum (NGVD). A benchmark was established at El 978.5 at the bottom of the bridge beam at Whitney Pond Dam. This elevation is given in the Phase 1 Inspection report for that dam.

(1) Top of dam - 954.4 (low area at north abutment)
956.1 (top of retaining walls)

(2) Test flood pool: 961.6

(3) Design surcharge (original design): Unknown

(4) Full flood control pool: Not Applicable (N/A)

(5) Recreation pool: 952.0 (top of stoplogs)

(6) Spillway crest: 947.8 (top of concrete)

(7) Upstream portal invert diversion tunnel: N/A

(8) Streambed at centerline of dam: 940.0

(9) Tailwater: 941.0 Millers River below dam

d. Reservoir

(1) Length of maximum pool: 2,100 feet

(2) Length of recreation pool: 2,100 feet

(3) Length of flood control pool: N/A

e. Storage (acre-feet)

(1) Test flood surcharge (net-at El 961.6): 125 with stoplogs, 180 without stoplogs

(2) Top of dam (El 954.4): 120

(3) Flood control pool: N/A

(4) Recreation pool (El 952.0): 90

(5) Spillway crest (El 947.8): 35

f. Reservoir Surface (acres)

*(1) Top of dam: 13

*(2) Test flood pool: 13

(3) Flood control pool: N/A

(4) Recreation pool: 13

(5) Spillway crest: 13

g. Dam

(1) Type - concrete

(2) Length - 184 feet

(3) Height - 16 feet

(4) Top width - 10 feet

*Based on the assumption that the surface area will not significantly increase with changes in pond elevation from 947.8 to 961.6.

(5) Side slopes - vertical concrete walls upstream; 1:1 earth slope downstream of south retaining wall; earthfill level with natural ground downstream of north retaining wall

(6) Zoning: N/A

(7) Impervious core: N/A

(8) Cutoff: retaining walls at north and south ends of dam and concrete cut-off beneath spillway and outlet

(9) Grout curtain: none shown on drawing

h. Spillway

(1) Type: ogee weir with 12 bays of stoplogs

(2) Crest length: 90 feet (length of stoplogs)
97 feet (total length)

(3) Crest elevation: 952.0 (top of stoplogs)
947.8 (top of concrete)

(4) Gates: none

(5) Upstream channel: none

(6) Downstream channel: 110 feet wide at spillway narrows to 20 feet wide 220 feet downstream; north side-vertical wall 7 to 9 feet high; south side-steep earth slope 9 feet high; channel makes sharp bend to north 220 feet downstream of dam.

i. Regulating Outlets. The regulating outlet at the dam consists of a wooden slide gate adjacent to the north end of the spillway. The slide gate opening is 9.2 feet wide by 10.5 feet high with an invert at El 942.3. The gate is operated by a rack and pinion mechanism located on a concrete slab over the outlet. The gate may be raised 7.25 feet. Discharge would flow into the channel below the spillway.

SECTION 2

ENGINEERING DATA

2.1 General. The only engineering data available is one drawing prepared in 1936 for the proposed reconstruction of Hunts Pond Dam (see Figure B-3). The drawing shows sections through the spillway, some construction details, and notes specifying the concrete mixes. The drawing was prepared by James E. Young, C.E. and was obtained from the Worcester County engineers' Office. There are no other drawings, specifications, or computations available from the Owner, State, or County agencies. Copies of previous inspection reports dated 1936 through 1968 prepared by the Worcester County Engineers are included in Appendix B. The most recent inspection was conducted in 1971 by the Massachusetts Department of Public Works. A copy of that report is also given in Appendix B.

We acknowledge the assistance and cooperation of personnel from the Massachusetts Division of Waterways, the Massachusetts Department of Public Works, and the Worcester County Engineers' Office. In addition, we acknowledge the assistance of Mr. Warren Harris, Jr. of Mason & Parker Manufacturing Company, who provided information on the history and operation of the dam.

2.2 Construction Records. There are no construction records or as-built drawings available for the dam or appurtenances. Previous inspection reports by the Worcester County Engineers' Office provide some observations made during construction of the present dam in 1936.

2.3 Operating Records. No operating records are available, and there is no daily record kept of the elevation of the pool or rainfall at the dam site.

2.4 Evaluation

a. Availability. There is limited engineering data available for this dam.

b. Adequacy. The lack of detailed hydraulic, structural and construction data did not allow for a definitive review. Therefore, the evaluation of the adequacy of this dam is based on the visual inspection, past performance history, and engineering judgment.

c. Validity. Comparison of the available drawing from the Worcester County engineers' Office with the field survey conducted during the Phase I Inspection indicates that the available information is valid.

SECTION 3

VISUAL INSPECTION

3.1 Findings

a. General. The Phase 1 Inspection of the dam at Hunts Pond was performed on September 29, 1979. A copy of the inspection checklist is included in Appendix A. Previous inspections were conducted by the Worcester County Engineering Department from 1936 to 1968 and by the Massachusetts Department of Public Works in 1971. Copies of those reports are given in Appendix B.

b. Dam. The dam is a concrete structure and consists of a spillway, outlet, and two retaining walls that form the north and south ends of the dam.

The most obvious deficiency is localized spalling and cracking of the concrete. This was observed on the upstream face of the north retaining wall and outlet headwall (see photo No. 3), on the center pier of the spillway (see photo No. 4), and on the south sidewall of the spillway just downstream of the weir. Slight seepage was observed about midway on the downstream slope below the south retaining wall and next to the spillway sidewall. The seepage appears to be through a vertical crack on the upstream face of the south retaining wall. A significant growth of trees and brush has occurred on the top and downstream slope of the dam below the south retaining wall. The earth fill forming the crest of the dam along the south retaining wall is about 2 feet lower than the top of the wall. Also, a footpath was observed on the downstream slope along the south sidewall of the spillway. The top of the dam along the north retaining wall is clear of trees, and the downstream slope has been filled in to form a parking area.

c. Appurtenant Structures. The spillway is a concrete ogee weir with 12 bays of stoplogs supported by a steel framework. At the time of inspection, water was discharging over the spillway, so the weir, stoplogs, and downstream toe could not be examined. Spalling of the concrete on the center pier and south sidewall was noted as discussed above. The steel framework contains release mechanisms for the stoplogs, however wooden planks which formed a walkway have been removed. The framework is slightly bowed between the guideposts forming the bays of stoplogs (see photo No. 5). The framework could trap ice, logs and other debris during a storm and interfere with discharge over the spillway. Consideration should be given to removing the framework and replacing it with collapsable pins to support the stoplogs.

The outlet structure is located adjacent to the north end of the spillway. Spalling of the concrete on the upstream headwall was mentioned above. Cracking and efflorescence was also observed on the sidewalls of the outlet. The slide gate which was replaced in 1978 is in good condition, although slight leakage is occurring from the bottom and sides of the gate. The operating mechanism was recently painted and is in good condition. Also, the concrete slab supporting the mechanism was repaired in 1978 and is in good condition.

d. Reservoir Area. The Town of Winchendon is located on the north side of Hunts Pond. This area contains a moderate to dense development of commercial and residential buildings. There are also two paved roads that cross Hunts Pond upstream of the dam. The bridge for Old County Road is located about 100 feet upstream and is supported by two concrete piers. The bridge for Route 12 is located about 600 feet upstream and is a stone masonry bridge with a 45-foot wide arch opening. An embankment for the Boston & Maine railroad is located at the northeast end of Hunts Pond. This embankment is 25 feet high and is an

integral part of the dam for Whitney Pond. There are a few residential and commercial buildings along the south side of Hunts Pond.

e. Downstream Channel. The channel below the dam carries discharge from both the spillway and outlet. The channel has a natural bed of cobbles and boulders with a few bedrock outcrops. The river flows rapidly downstream, and there is no accumulation of debris in the downstream channel. The concrete retaining wall on the north side of the channel is cracked and spalled locally. There is also a tree growing at the base of the wall. A few sandbags have been placed at one low area in the top of the wall. The south side of the channel is a steep earth slope covered with rock fill. There is a dense growth of trees and brush on this slope and overhanging the channel.

About 220 feet downstream of the dam, the channel narrows to only about 20 feet wide and bends sharply northward. In this area, a new concrete wall was built in 1978 on the north/east side of the channel. The wall extends about 20 feet downstream of the bend. Below this point, the sides of the channel are lower natural earth slopes (see Photo No. 8).

3.2 Evaluation. The visual inspection indicates that the dam is in fair to good condition. At the present time, there is no suitable access to operate the stoplogs during storms. Although some repairs have been made recently, further maintenance is required to assure the continued performance of this dam. Measures to improve this condition are stated in Section 7.3.

SECTION 4

OPERATING PROCEDURES

4.1 Procedures. There are no regular operating procedures for this dam. However, Mason & Parker Manufacturing Company, the Owner of the dam, is located at the site. Reportedly, the release mechanisms for the stoplogs are checked but there is no definite timetable for this procedure. Also, there is no ready means of access to the release mechanisms since the walkway has been removed. The slide gate is opened occasionally, but has not been opened since it was replaced in 1978.

4.2 Maintenance of Dam. In 1978, concrete was placed on the apron along the toe of the spillway. At the present time, however, the concrete on both retaining walls and on the pier in the center of the spillway is cracked and spalled. Slight seepage is occurring on the downstream slope of the dam next to the south sidewall of the spillway. Also, trees and brush are growing on the top and downstream slope of the dam below the south retaining wall.

4.3 Maintenance of Operating Procedures. In 1978, the wooden slide gate was replaced in the outlet. At the present time, slight leakage is occurring from the sides and bottom of the gate. Also in 1978, concrete was repaired at the base of the sidewalls and on the overhead slab of the outlet. However, the upstream side of the headwall is cracked and spalled. The unrepaired portions of the sidewalls are cracked and show some efflorescence. The rack and pinion mechanism for operating the slide gate is intact and recently painted.

4.4 Description of Any Warning System in Effect. There is no warning system in effect at this dam. Personnel from Mason & Parker Manufacturing Company are at the dam during the day and live nearby.

4.5 Evaluation. There is no suitable access to the stoplogs or definite procedure for their gradual release during storms. Although repairs were recently made at the dam, further maintenance is required. There is no program of technical inspections or a plan for surveillance of the dam during storms and warning people in downstream areas. This is undesirable considering that the dam is in the "significant" hazard category. Proper operation of the stoplogs, additional maintenance, regular technical inspections, and a surveillance and warning system should be implemented, as recommended in Sections 7.2 and 7.3.

SECTION 5

HYDRAULIC/HYDROLOGIC

5.1 Evaluation of Features

a. General. Hunts Pond Dam has a 54-square mile drainage area, about 13 percent of which is ponds and swamps (see Figure D-1, Drainage Area Map). The land is gently rolling, wooded, and mostly undeveloped. There are numerous ponds, lakes and reservoirs upstream. Some homes and small towns are located around the lakes and ponds.

Hunts Pond Dam is a run-of-the-river type of structure consisting mainly of a spillway. The surface area of the pond is about 13 acres, and the maximum storage capacity of the dam is about 120 acre-feet. The spillway is a concrete ogee weir with a center pier and 12 bays of stoplogs. The stoplogs are 4.2 feet high and are supported by a steel framework which contains mechanisms for releasing the stoplogs if necessary. The total length of the weir is 97 feet, and the effective length is 90 feet.

The low-level outlet is a wooden slide gate adjacent to the north end of the spillway. The maximum opening provided by the slide gate is 9.2 feet wide and 7.3 feet high. This opening can discharge a flow of 950 cfs when the pond is at El 954.4, the elevation of the low area just upstream of the north abutment of the dam. With the pond at El 954.4 and assuming no additional inflow, the outlet can lower the pond by 1 foot in about 0.17 hours, or 10 minutes.

b. Design Data. There are no hydraulic or hydrologic computations available for the design of the spillway at Hunts Pond Dam.

c. Experience Data. The original dam at the site was overtopped and washed out in the March 1936 flood when the water level reached El 954.4 (Worcester County Engineers' records). Records of past discharge are available for the U.S. Geological Survey gaging station No. 162000 located about 2.5 miles downstream of Hunts Pond Dam. The records date back to 1916 and indicate that the maximum discharge was 8500 cfs on September 22, 1938 (approximately the 100-year storm). This discharge is for an 83-square mile drainage area. An inspection report made on that date by the Worcester County Engineer's Office states that the high water level at Hunts Pond Dam was 6 inches below the top of the concrete abutments (El 955.6). Personnel at the Mason & Parker Manufacturing Company recall that during the 1938 hurricane water was flooding the parking area. However, they do not recall that the dam (retaining wall) has ever been overtopped.

d. Visual Inspection. The dam consists of a spillway flanked by two retaining walls that extend into natural ground. Just upstream of the north abutment of the dam, there is an area about 20 feet wide where the natural ground is lower than the retaining wall of the dam. As the pond level rises, water will initially overflow this area and flow around the end of the retaining wall, over a parking area, and into factory buildings.

Both the spillway and outlet discharge into a downstream channel which is about 110 feet wide at the dam but narrows to 20 feet wide 220 feet downstream. This constriction is located where the river makes a 90-degree bend to the north. Under high flows, tailwater levels below the dam are controlled by this narrow area. If the river rises above the top of the wall on the north side of the channel (El 947), flooding of the factory area will occur.

A detailed discussion of the condition of the dam and appurtenances is given in Section 3, Visual Inspection.

e. Test Flood Analysis. Hunts Pond Dam has been placed in the "small" size and "high" hazard categories. According to the Corps of Engineers guidelines, a test flood ranging from a one-half to a full PMF (probable maximum flood) should be used to evaluate the capacity of the spillway. A one-half PMF was used for this analysis.

The PMF rate for the Hunts Pond watershed is 700 cfs per square mile of drainage area. This calculation is based on the average slope of 1 percent in the drainage area, the pond-plus-swamp area to drainage area ratio of 12.6 percent, and the U.S. Army Corps of Engineers' guide curves for Maximum Probable Flood Peak Flow Rates (dated December 1977). The guide curve for "flat and coastal" topography was used to determine the peak flow rate. Applying one-half the PMF rate to the 54 square mile drainage area results in a peak test flood inflow of 18,900 cfs. By adjusting the test flood inflow for surcharge storage, the peak test flood outflow was calculated to be 18,800 cfs (348 cfs per square mile). With the stoplogs in place, the pond level would rise to El 963.8. Without stoplogs, the pond would rise to El 961.6.

Hydraulic analyses indicate that the spillway without stoplogs can discharge 4,900 cfs or 26 percent of the antest flood outflow with the pond at El 954.4, which is the low area near the north abutment of the dam. With stoplogs, the spillway could discharge 1,030 cfs or 5 percent of the test flood outflow before the low area is overtopped. Although the capacity of the spillway is inadequate there is no means of significantly increasing the discharge from such a large drainage area. Overtopping and flooding are due more to the volume of runoff than the limited capacity of the spillway.

During the test flood with stoplogs released, the low area would be overtopped by 7.2 feet and the retaining walls of the dam would be overtopped by 5.5 feet. About 11,000 cfs would discharge over the spillway, about 4,000 cfs would discharge over the dam, and about 3,800 cfs would discharge over the low area. Where critical flow occurs over the low area, the water would be 4.2 feet deep at a velocity of 12 feet per second (fps).

During the test flood with the stoplogs in place, the low area would be overtopped by 9.4 feet and the retaining walls of the dam would be overtopped by 7.7 feet. About 11,000 cfs would discharge over the spillway, about 6,300 cfs over the dam, and about 1,500 cfs over the low area. Critical flow on the low area would occur with the water 5.5 feet deep at a velocity of 13 fps.

During both test floods, discharge downstream of the dam will back up at the constriction where the channel narrows to 20 feet wide. A tailwater will build up below the dam, however, the elevation of the tailwater cannot be determined without a detailed survey of the factory area which would also be flooded. Preliminary computations indicate that the dam would be submerged during the test floods.

e. Dam Failure Analysis. The peak discharge rate due to failure of the dam was calculated to be 4287 cfs with the pond at El 954.4. This calculation is based on a head of 14.4 feet and assumes failure of half of the spillway. Without stoplogs, the discharge from the spillway prior to failure would produce a tailwater 10 feet deep, submerging the spillway by 2.2 feet. If the dam failed under this condition, the tailwater would rise an additional foot. Failure of the dam with stoplogs would produce a flood 10 feet deep as compared to 4 feet deep prior to failure. It would take about 0.8 hours to drain the pond.

If failure of the dam occurs with the pond at El 954.4, water will initially overflow the north side of the channel and flood the factory area by as much as 5 feet. Additional flooding would occur due to the constriction in the downstream channel causing the flood water to back up into the factory area. It is expected that the flood level in the downstream channel would also affect a factory outlet store located next to the river just downstream of the constriction.

In addition to appreciable property damage, flooding during failure of the dam could result in the loss of a few lives. For these reasons, the dam has been placed in the "significant" hazard category.

SECTION 6

STRUCTURAL STABILITY

6.1 Evaluation of Structural Stability

a. Visual Observations. The evaluation of the structural stability of Hunts Pond Dam is based on a review of previous inspection reports, one available drawing, and the visual inspection conducted on September 29, 1979. The downstream toe of the dam could not be examined since water was flowing over the spillway during the inspection.

As discussed in Section 3, Visual Inspection, the dam is in fair to good condition. The concrete is spalling at several locations, slight seepage is occurring next to the south wall of the spillway, earthfill is needed behind the south retaining wall, and trees are growing on the crest and downstream slope of the dam behind the south retaining wall.

b. Design and Construction data. The existing dam was built in 1936 after the original dam was washed out in the March 1936 storm. A drawing dated June 26, 1936, prepared by James E. Young, C.E. shows the proposed construction of the dam (see Figure B-3). The drawing indicates that the spillway and sidewalls are constructed of reinforced concrete. There is no typical section of the retaining walls. The drawing shows a 2.5-foot thick concrete cut-off wall below the toe of the spillway. The bottom of the cut-off is noted as to be determined by the Engineer. This cut-off is shown to extend laterally beneath the outlet and ties into the bottom of the retaining walls. The retaining walls are shown to be a maximum of 24 feet high, with the footings stepped up at the abutments for a minimum wall height of 5 feet. Specifications for various concrete mixes are given in notes on the drawing.

Several inspection reports were made by the Worcester County Engineer's office during construction of the dam. These state that the foundation of the dam is constructed on "hardpan" (glacial till) with large boulders (see page B-11). They also state that the cut-off beneath the dam is 4 feet thick (see page B-12). Several times the concrete is described as "poor" or "too wet" (see pages B-11, B-12, B-15, and B-16).

c. Operating Records. There is no instrumentation of any type in the concrete or foundation at Hunts Pond Dam, and no instrumentation was ever installed at this site. The performance of the dam prior under prior loading can only be inferred by physical evidence at the site.

d. Post-Construction Changes. A wooden walkway which was supported by the steel framework over the spillway has been removed to prevent trespassing. In 1978, a new wooden slide gate was installed in the outlet. At that time, additional concrete was placed on the apron at the toe of the spillway, and concrete was repaired on the sidewalls and overhead slab of the outlet.

e. Seismic Stability. The dam is located in Seismic Zone No. 2, and in accordance with Corps of Engineers' guidelines does not warrant further seismic analysis at this time.

SECTION 7

ASSESSMENT, RECOMMENDATIONS, AND REMEDIAL MEASURES

7.1 Dam assessment

a. Condition. Based upon a review of available data, and the visual inspection of the site, there are deficiencies which must be corrected to assure the continued performance of the dam. The concrete is spalling on the upstream face of the north retaining wall, the headwall of the outlet, the center pier of the spillway, and the south sidewall of the spillway. The concrete is cracked on the upstream face of the south retaining wall and the sidewalls of the outlet. Slight seepage is occurring adjacent to the south sidewall of the spillway. Additional earth fill is needed on the top of the dam along the south retaining wall. Trees and brush are growing on the top of the dam and downstream slope along the south retaining wall.

The peak test flood (one-half PMF) outflow is estimated to be 18,800 cfs with the pond at El 961.6 assuming the stoplogs are released. The test flood would overtop the low area just upstream of the north abutment by 7.2 feet and overtop the dam by 5.5 feet. Hydraulic analyses indicate that the spillway without stoplogs can discharge 4900 cfs or 26 percent of the test flood outflow before the low area is overtopped. With the stoplogs in place, the spillway can discharge 1,030 cfs or 5 percent of the test flood outflow before the low area is overtopped.

b. Adequacy. The lack of detailed design and construction data did not allow for a definitive review. Therefore, the evaluation of this dam is based on a review of the available data, the visual inspection, past performance and engineering judgment.

c. Urgency. The remedial measures outlined below should be implemented by the Owner within one year after receipt of this Phase I Inspection Report.

d. Need for Additional Investigation. Additional investigations to further assess the adequacy of the dam and spillway are not required at this time. However, future changes in the structure or in the reservoir area may alter this conclusion.

7.2 Recommendations. Further hydraulic studies are not recommended. Although the spillway can discharge only 5 to 26 percent of the test flood outflow, the capacity cannot be significantly increased to discharge flood flows from such a large drainage area. The flood hazard is due more to the volume of runoff than the limited capacity of the spillway.

The Owner should retain the services of a qualified engineering consultant to conduct the following:

a. Design a suitable means of access to the stoplogs and establish a procedure for their gradual release before and during storms;

b. Inspect the weir, stoplogs, and toe of the dam during a period when there is no flow over the spillway. The slide gate should also be opened and tested. Consideration should be given to lowering the pond and inspecting both sides of the dam. The consultant should design appropriate remedial works, if necessary.

The Owner should implement the recommendations of the consultant.

7.3 Remedial Measures

a. Operating and Maintenance Procedures. It is recommended that the Owner accomplish the following:

(1) Repair spalled and/or cracked concrete on the upstream face of the dam, on the center pier and south sidewall of the spillway, and on the upstream headwall and sidewalls of the outlet.

(2) Monitor seepage occurring midway on the downstream slope of the dam next to the south sidewall of the spillway.

(3) Place additional earthfill on the top of the dam along the south retaining wall.

(4) Consideration should be given by the Owner to raising the elevation of the low area adjacent to the north abutment of the dam.

(5) Selectively clear trees, brush, and roots from the top and downstream slope of the dam along the south retaining wall. Any voids left from removal of roots should be backfilled with selected material.

(6) Implement a systematic program of maintenance inspections. As a minimum, the inspection program should consist of a monthly inspection of the dam and appurtenances, supplemented by additional inspections during and after severe storms. All repairs and maintenance should be undertaken in accordance with all applicable State regulations.

(7) Conduct periodic technical inspections of this dam on a biennial basis.

(8) Establish a plan for round-the-clock surveillance of the dam during storms and a plan for notifying and evacuating people in the factory and downstream areas in case of an emergency at the dam or before releasing the stoplogs.

7.4 Alternatives. An alternative to designing suitable access to the stoplogs would be to remove the steel framework and replace it with collapsable pins to support the stoplogs. This would also eliminate the potential of the framework to trap debris and obstruct discharge over the spillway. A qualified engineer should supervise and design the removal of the framework and installation of the pins.

APPENDIX A

PERIODIC INSPECTION CHECKLIST

HUNTS POND DAM

PERIODIC INSPECTION

PARTY ORGANIZATION

ROJECT Hunts Pond

DATE Sept. 29, 1979

TIME 10:00 A.M.

WEATHER Sunny-Temp. 70°

W.S. ELEV. 952.5* U.S 941.0* DN.S.

*Based on benchmark at El 978.5 located at the bottom of the bridge beam at Whitney Pond Dam.

ARTY:

. C. Sweet

. E. Greco

. F. Sviokla

. W. Cheechi

. P. Reilly

6.

7. L. Branagan

8.

9.

10.

PROJECT FEATURE	INSPECTED BY	REMARKS
. Dam/Spillway	Sweet/Greco/Branagan	
.		
3.		
4.		
5.		
6.		
7.		
8.		
9.		
0.		

PERIODIC INSPECTION CHECK LIST

PROJECT Hunts Pond DATE 9/29/79

PROJECT FEATURE Dam/spillway NAME E. Greco

DISCIPLINE Geotechnical NAME C. Sweet

AREA EVALUATED	CONDITIONS
DAM EMBANKMENT Crest Elevation	dam is concrete spillway with stoplogs and concrete retaining walls 956.1 - top of retaining walls
Current Pool Elevation	952.5
Maximum Impoundment to Date	September 1938 flood El 955.6 from Worcester Co. Engr. records
Surface Cracks	spalling and cracking of concrete on center pier and retaining walls - weir
Pavement Condition	not visible. Not applicable (N/A)
Movement or Settlement of Crest	none visible
Lateral Movement	steel framework supporting stoplogs is bowed
Vertical Alignment	level
Horizontal Alignment	straight
Condition at Abutment and at Concrete Structures	north retaining wall spalling on upstream face-south retaining wall has large spall where weir meets wall.
Indications of Movement of Structural Items on Slopes	none visible
Trespassing on Slopes	footpaths on crest and downstream slope at south retaining wall
Sloughing or Erosion of Slopes or Abutments	erosion and growth of trees on earthfill of south retaining wall
Rock Slope Protection - Riprap Failures	N/A
Unusual Movement or Cracking at or near Toes	toe not visible - additional concrete placed along toe of spillway in 1978
Unusual Embankment or Downstream Seepage	seepage midway down outside of south retaining wall
Piping or Boils	none visible
Foundation Drainage Features	none visible
Toe Drains	none visible
Instrumentation System	none

PERIODIC INSPECTION CHECK LIST

PROJECT Hunts Pond Dam DATE 9/29/79

PROJECT FEATURE Spillway NAME E. Greco

DISCIPLINE Geotechnical NAME L. Branagan

AREA EVALUATED	CONDITION
OUTLET WORKS - SPILLWAY WEIR, APPROACH AND DISCHARGE CHANNELS	
a. Approach Channel	Pond and road bridge (1973) upstream
General Condition	Good
Loose Rock Overhanging Channel	None
Trees Overhanging Channel	Couple of trees and brush on both sides of pond - house on north side
Floor of Approach Channel	Natural earth - bottom is 4' to 5' below top of retaining wall on south side of dam.
b. Weir and Training Walls	Concrete ogee weir and retaining walls
General Condition of Concrete	Weir not visible due to overflow-south wall has large spall near weir
Rust or Staining	Stain at water line
Spalling	Spalling of center pier and south wall near weir
Any Visible Reinforcing	None
Any Seepage or Efflorescence	Cracking and efflorescence on center pier
Drain Holes	None visible
c. Discharge Channel	
General Condition	Fair
Loose Rock Overhanging Channel	North side constructed of concrete and masonry walls - minor cracks and spalls
Trees Overhanging Channel	Trees growing along south bank
Floor of Channel	Boulders, cobbles, bedrock outcrops no significant debris.
Other Obstructions	None

PERIODIC INSPECTION CHECK LIST

ROJECT Hunts Pond Dam DATE 9/29/79

ROJECT FEATURE Outlet structure NAME E. Greco

ISCIPLINE Geotechnical NAME C. Sweet

AREA EVALUATED	CONDITION
UTLET WORKS - OUTLET STRUCTURE AND OUTLET CHANNEL	
General Condition of Concrete	Fair - concrete repaired on overhead slab and base of sidewalls in 1978
Rust or Staining	None
Spalling	Headwall on upstream side is cracked and spalled
Erosion or Cavitation	Upstream side of headwall
Visible Reinforcing	None - mass concrete
Any Seepage or Efflorescence	Cracking and efflorescence on inside of sidewalls-seepage at bottom of slide gate
Condition at Joints	Fair to good
Drain Holes	None visible
Channel	Same as spillway
Loose Rock or Trees Overhanging Channel	See spillway
Condition of Discharge Channel	See spillway

OTE: Flow through outlet controlled by wooden slide gate replaced in 1978. Gate is 7" thick and 10' wide, opening is 9.2' wide. Gate is operated by rack and pinion mechanism on overhead slab - mechanism recently painted. Owner reports that there is a stone-lined well extending 12' upstream of slide gate to drain water toward outlet.

APPENDIX B

PLANS OF DAM AND PREVIOUS INSPECTION REPORTS

	Page
Figure B-1, Plan of Dam	B-1
Fiyure B-2, Sections through Dam	B-2
Figure B-3, Drawing of Dam, dated June 26, 1936	B-3
File card for original dam and Hunts Pond Dam from Worcester County Engineer's Office	B-4
Previous Inspection Reports Dated March 1936 through November 1968 by Worcester County Engineer's Office	B-5
Dated December 1971 by Massachusetts Department of Public Works	B-39

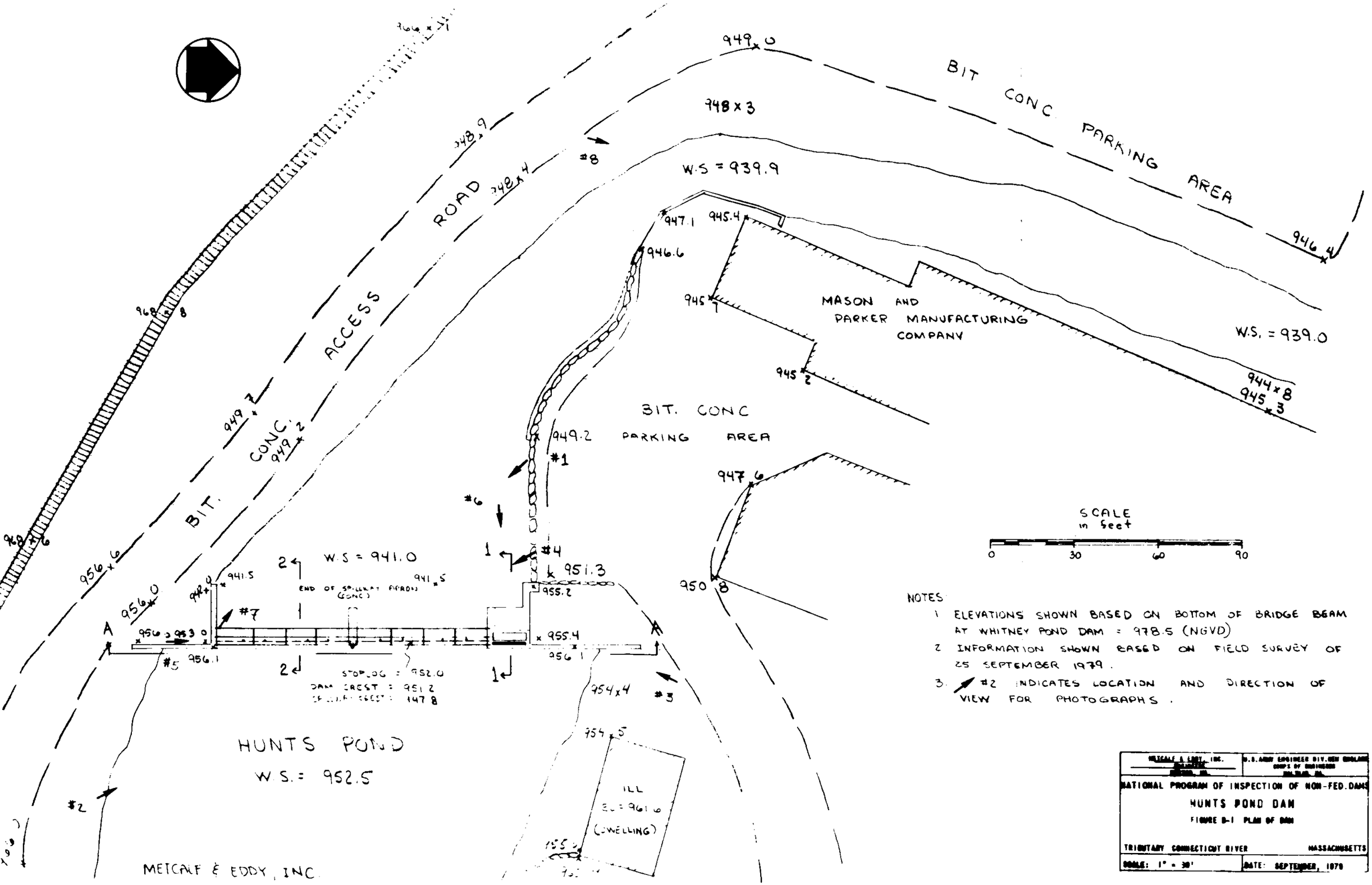

NOTES:

1. ELEVATIONS SHOWN BASED ON BOTTOM OF BRIDGE BEAM AT WHITNEY POND DAM = 978.5 (NGVD)
2. INFORMATION SHOWN BASED ON FIELD SURVEY OF 25 SEPTEMBER 1979.
3. ↗ #2 INDICATES LOCATION AND DIRECTION OF VIEW FOR PHOTOGRAPHS.

METCALF & EDDY, INC. BOSTON, MA.	U.S. ARMY ENGINEER DIV. NEW ENGLAND CORPS OF ENGINEERS WALTHAM, MA.
NATIONAL PROGRAM OF INSPECTION OF NON-FED. DAMS	
HUNTS POND DAM	
FIGURE B-1 PLAN OF DAM	
TRIBUTARY CONNECTICUT RIVER	MASSACHUSETTS
SCALE: 1" = 30'	DATE: SEPTEMBER, 1979

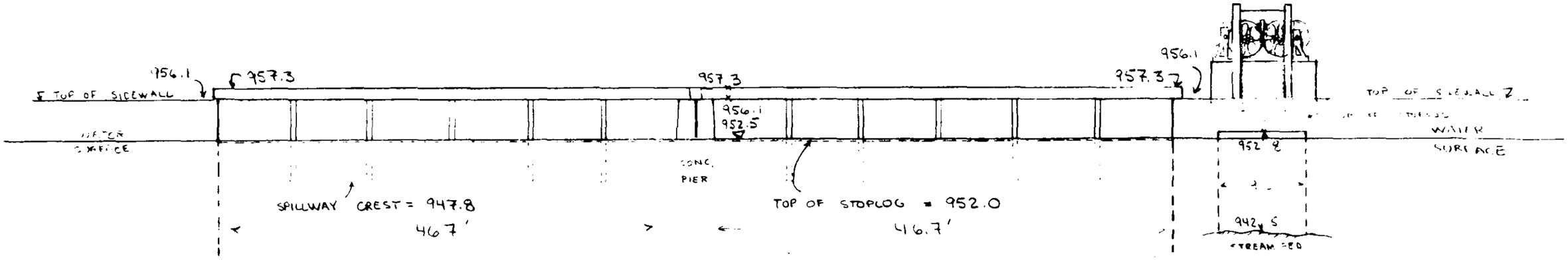

PROFILE A-A

DAM

SCALE 1 IN = 10 FT.

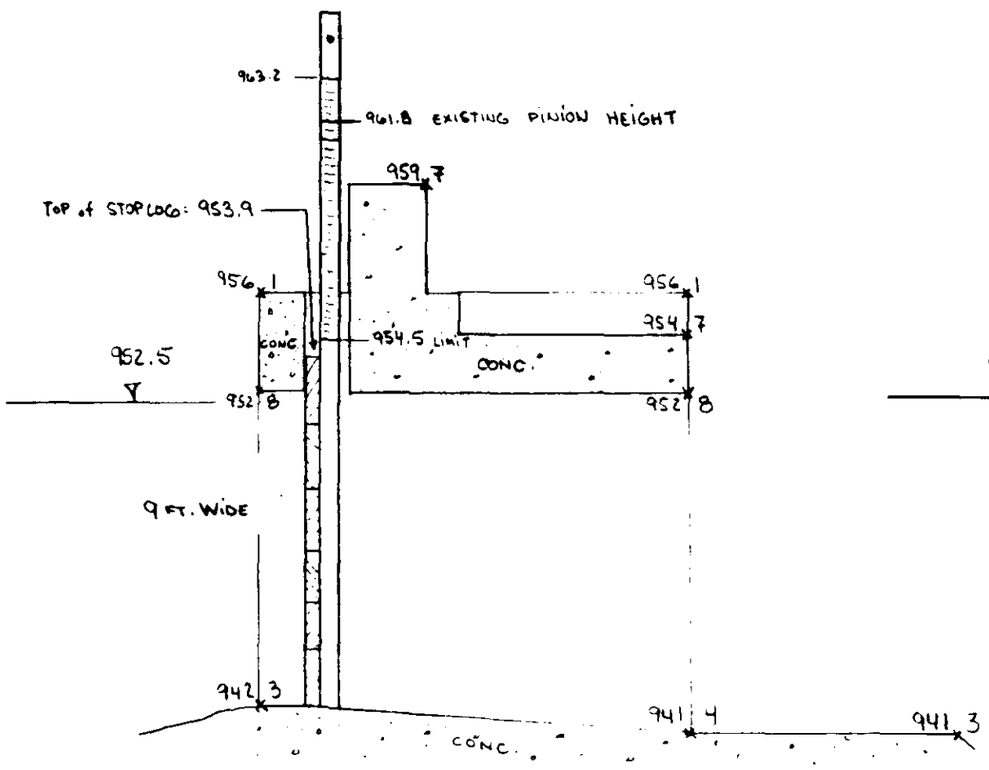

SECTION 1-1

OUTLET STRUCTURE

SCALE 1 in. = 5 FT.

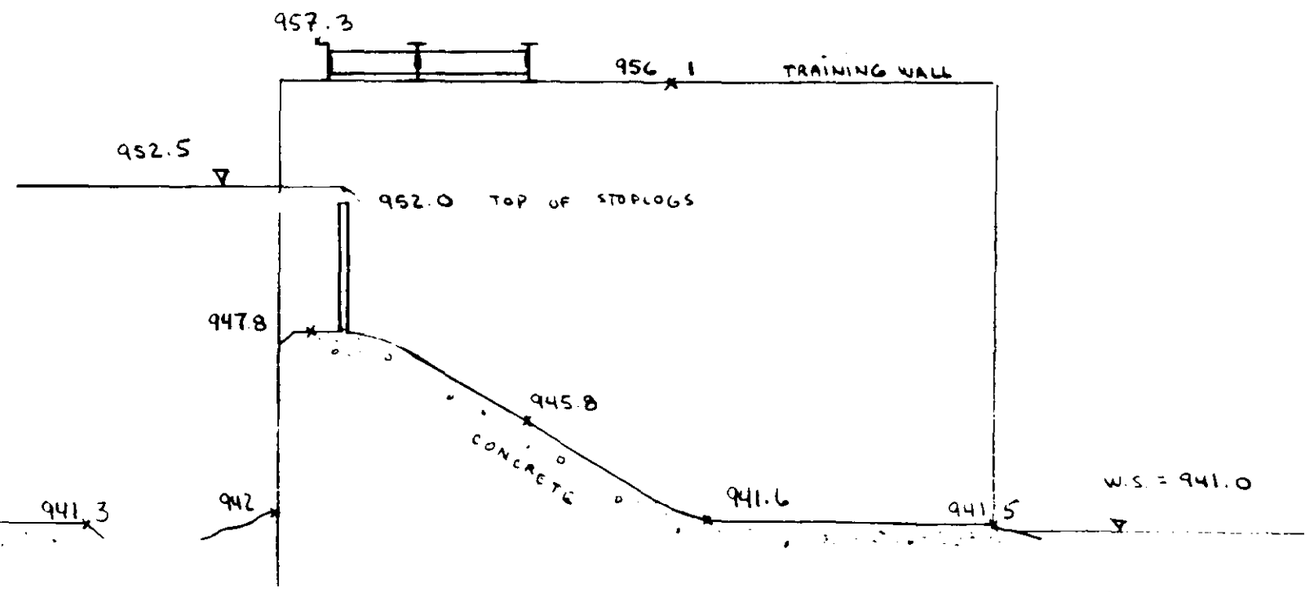

SECTION 2-2

SPILLWAY

SCALE 1 in = 5 FT.

SCALE in feet

5 10 15 30

METCALF & EDDY, INC.

METCALF & EDDY, INC.

U.S. ARMY ENGINEER DIV. NEW ENGLAND CORPS OF ENGINEERS WALTHAM, MA.

NATIONAL PROGRAM OF INSPECTION OF NON-FED. DAMS

HUNTS POND DAM

FIGURE B-2 SECTIONS THROUGH DAM

TRIBUTARY CONNECTICUT RIVER MASSACHUSETTS

SCALE: AS SHOWN

DATE: SEPTEMBER, 1979

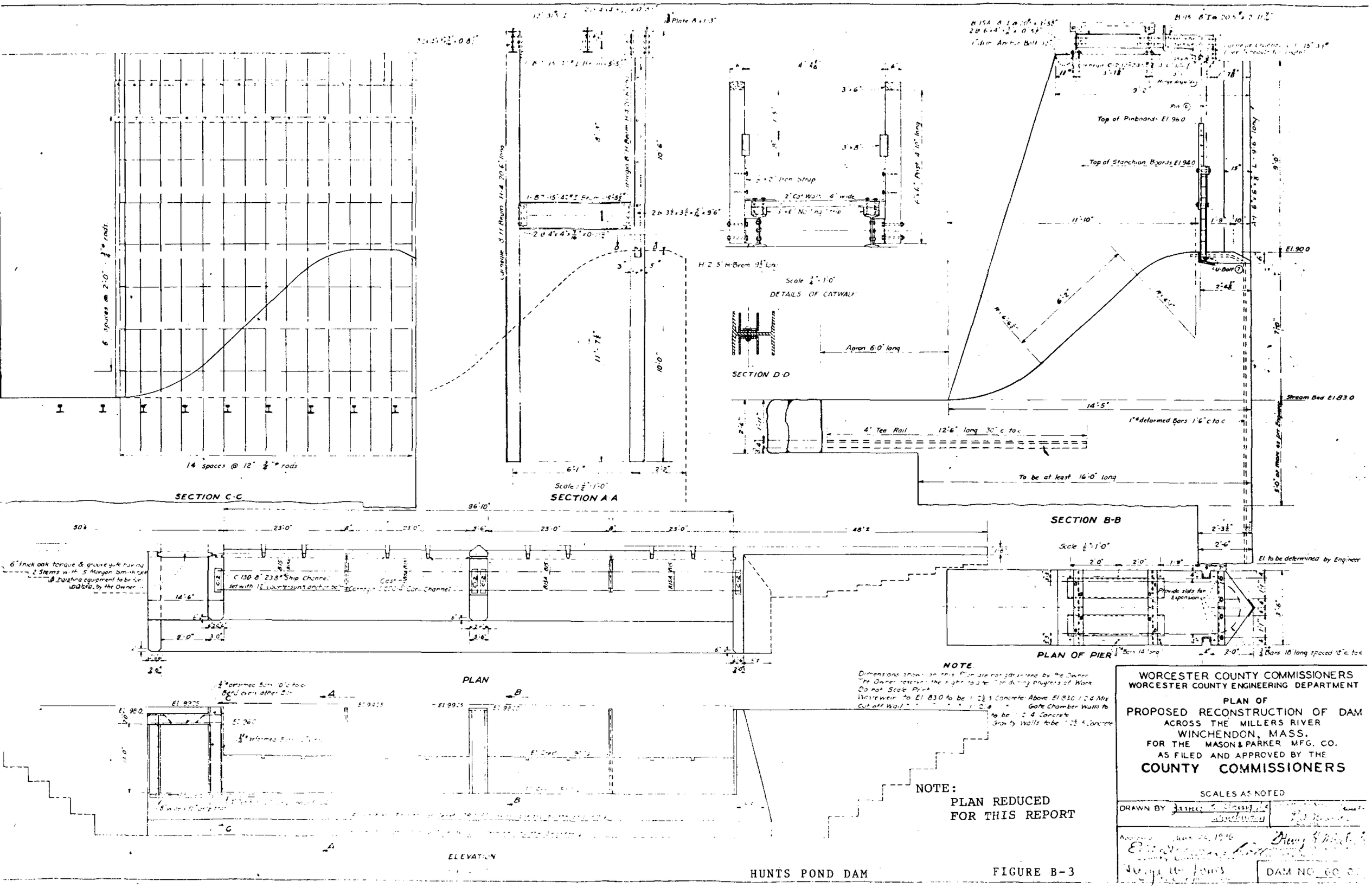

HUNTS POND DAM

FIGURE B-3

N OR CITY Winchendon DECREE NO. PLAN NO. DAM NO. 56-06.

TION Winchendon. Mason Parker Dam Note book-5 Page 19. Note book 9-132

DESCRIPTION OF DAM

Rubble Wall- Log-plank Rollway -Earth Embankments.
190.'±
11.'0 From top Flashboards to Apron.
top 21.'0 - to 24.'5
bottom 36.'0 " 40.'0
m Slope Vert. Emb. 45° Slope Rollway
" 1½:1
Spillway 80.'±
tes 18'-20'
of Gates To West of Rollway.- Canal to Mill separate from dam
is used Yes
shboards or Gates 24" high.
gned by Ledge Fdtn.
ructed by
ructed Before 1700- Repaired 1921. L.O.M.

GENERAL REMARKS Inspected: 3-30-26

ned by Mason & Parker- Mfg Co.
" wheels - 14 Ft. head - 100. H.P.
Dynamo - 1- 30" Hunt Wheel- Flume 8'x8'- 100. H.P.
cted: Dec. 14. 1927 - L.O. Marden.
" Oct. 14. 1929 " " 4-25-31
" July 14, 1933
" June 1, 1934
" Mar 14, 1936 L.O.M. Langdon, Dunbar
L.O.M. Aug. 11, 1936
Sept. 24 1936 - Chapman, Crockett, Jubert Young

DESCRIPTION OF RESERVOIR & WATERSHED

Name of Main Stream Millers River
" " any other Streams
Length of Watershed (Traced and Approve
Width " "
Is Watershed Cultivated
Percent In Forests
Steepness of Slope
Kind of Soil
No. of Acres in Watershed 54 Sq. Miles = 34,560 A.
" " " " Reservoir 11.7"
Length of Reservoir
Width " "
Max Flow Cu. Ft. per Sec.
Head of Flashboards-Low Water
" " " High " 13' Ave. Head

GENERAL REMARKS

9-10-36 - L.O.M., M.M. Day
9-19-36 - L.O.M. Young, Tornquist)
Dec. 2, 1932 [illegible]
Inspected: Oct. 5, 1936 - L.O.M. - Oct. 7, 1936
" : Oct. 14, 1936 " " Oct. 25, "
" : Oct. 29, 1936 " " Tornquist
" : Mar. 20, 1936 - L.O.M. M.F. Hunt
" : Mar. 22, 1936 - L.O.M. W. Jones
" : Mar. 23, 1936 - Chapman
1936 Flood [illegible] (over)

pected: July 24, 1938 - L.O. Marden. 60-06
spected: Oct. 14, 1938 - M. F. Hunt
" : Dec. 6, 1938 - E. S. Grover - 4' boards in place. 2' water over crest. LOM
" : Sept. 22 1938 - L.O.M., Hunt, Casella., Chapman
" : Nov. 15, 1938 - "
" : Dec. 6. 1938 - E.S. Grover
" : Sept. 20, 1939. - L.O. Marden
Patrol : Jan. 6, 1939 - E. S. Grover - Flood Patrol
" : Mar. 16. 1939 - " "
nspected : April 13. 1940 - L.O.M.
" : Dec. 1, 1941 - " - W. E. Chapman
" : Feb. 26, 1944 "
" : Oct. 17, 1946 - "
" : Oct. 16, 1947 "
" : July 8. 1948 "
" : May 16, 1950 "
" : Dec. 12, 1951 "

Constructed by Francis Young C.E. 1936
Type Concrete Waste Weir dam, middle open apron, gate chamber

COUNTY OF WORCESTER MASSACHUSETTS

COUNTY ENGINEER

Inspection of Dams, Reservoir Dams, and Reservoirs.

Inspected by W. O. L., M. F. H. Date 3/20/36 Dam No. 60-06

Town Winchendon Location Millers River

Owner Use

Material and Type

Dam Designed by Constructed by Year

SPILLWAY—Length Feet. Depth Feet

El. top Abutment El. Crest El. Apron El. Streambed

Width top Abutment Width top Crest Width bottom Spillway

Width Flashboards carried Kind Flashboards

El. Flowline Cleanout Pipe Size and Kind Cleanout Pipe

Kind of Foundation under Spillway

Condition

EMBANKMENT—Length overall Feet

El. Top El. Natural Ground Width Top

Width of Bottom Upstream Slope Downstream Slope

Kind of Corewall Riprap

Material in Embankment Foundation

Condition Entier dam out. Water was going over entire dam. 3' or more. Wooden bridge above also gone

GATES Ice in pond went out and helped take both bridge and dam out Location

Size Kind El. Flowline

Condition

WHEEL Kind Size Rated H. P.

Location Ave. Head

Evidence of Leaks in Structure

Recent Repairs and Date

Topography of Country below Dam

Nature of Buildings and Roads below Dam.

Number of Acres in Pond Drainage Area in Square Miles

Discharge in Second Feet per Square Mile

Estimated Storage Million Cubic Feet

COUNTY OF WORCESTER MASSACHUSETTS

COUNTY ENGINEER

Inspection of Dams, Reservoir Dams, and Reservoirs.

Inspected by L.O.M., G.W. Jones Date 3/[illegible]/76 Dam No. 60-06

Town Winchendon Location Millers River

Owner Mason Parker Mfg. Co. Use

Material and Type Part old sheeting and cap [illegible] still in river

Dam Designed by Constructed by Year

SPILLWAY—Length Feet. Depth Feet

El. top Abutment El. Crest El. Apron El. Streambed

Width top Abutment Width top Crest Width bottom Spillway

Width Flashboards carried Kind Flashboards

El. Flowline Cleanout Pipe Size and Kind Cleanout Pipe

Kind of Foundation under Spillway

Condition Washed out during flood due to two(2) bents upstream. High St. bridge going out. Ice and I-beams hit dam and started it going out.

EMBANKMENT—Length overall Feet

El. Top El. Natural Ground Width Top

Width of Bottom Upstream Slope Downstream Slope

Kind of Corewall Riprap

Material in Embankment Foundation

Condition

GATES Location

Size Kind El. Flowline

Condition Wooden side walls partly in place

WHEEL Kind Size Rated H. P.

Location Ave. Head

Evidence of Leaks in Structure

Recent Repairs and Date

Topography of Country below Dam

Nature of Buildings and Roads below Dam

Number of Acres in Pond Drainage Area in Square Miles

Discharge in Second Feet per Square Mile

Estimated Storage Million Cubic Feet

COUNTY OF WORCESTER MASSACHUSETTS

COUNTY ENGINEER

Inspection of Dams, Reservoir Dams, and Reservoirs.

Inspected by L.O.M., C. Tornquist Date 3/23/36 Dam No. 60-06

Town Winchendon Location Millers River

Owner Mason-Parker Mfg. Co. Use

Material and Type Discuss feasibility of reconstruction and type of dam that would meet approval of County

Dam Designed by Constructed by Year

SPILLWAY—Length Feet. Depth Feet

El. top Abutment El. Crest El. Apron El. Streambed

Width top Abutment Width top Crest Width bottom Spillway

Width Flashboards carried Kind Flashboards

El. Flowline Cleanout Pipe Size and Kind Cleanout Pipe

Kind of Foundation under Spillway

Condition

EMBANKMENT—Length overall Feet

El. Top El. Natural Ground Width Top

Width of Bottom Upstream Slope Downstream Slope

Kind of Corewall Riprap

Material in Embankment Foundation

Condition

GATES Location

Size Kind El. Flowline

Condition

WHEEL Kind Size Rated H. P.

Location Ave. Head

Evidence of Leaks in Structure

Recent Repairs and Date

Topography of Country below Dam

Nature of Buildings and Roads below Dam

Number of Acres in Pond Drainage Area in Square Miles

Discharge in Second Feet per Square Mile

Estimated Storage Million Cubic Feet

HUNTS POND DAM

COUNTY OF WORCESTER MASSACHUSETTS

COUNTY ENGINEER

Inspection of Dams, Reservoir Dams, and Reservoirs.

Mr. Burbank

Inspected by L.O.M., C.A. Tornquist, Date 5/14/36 Dam No. 22-20

Town Winchendon Location Millers River

Owner Mason-Parker Mfg. Co. Use

Material and Type

Dam Designed by Constructed by Year

SPILLWAY—Length Feet. Depth Feet

El. top Abutment El. Crest El. Apron El. Streambed

Width top Abutment Width top Crest Width bottom Spillway

Width Flashboards carried Kind Flashboards

El. Flowline Cleanout Pipe Size and Kind Cleanout Pipe

Kind of Foundation under Spillway

Condition

EMBANKMENT—Length overall Feet

El. Top El. Natural Ground Width Top

Width of Bottom Upstream Slope Downstream Slope

Kind of Corewall Riprap

Material in Embankment Foundation

Condition Examine foundations of proposed new wall and approve same

GATES Location

Size Kind El. Flowline

Condition

WHEEL Kind Size Rated H. P.

Location Ave. Head

Evidence of Leaks in Structure

Recent Repairs and Date

Topography of Country below Dam

Nature of Buildings and Roads below Dam

Number of Acres in Pond Drainage Area in Square Miles

Discharge in Second Feet per Square Mile

Estimated Storage Million Cubic Feet

COUNTY OF WORCESTER MASSACHUSETTS

COUNTY ENGINEER

Inspection of Dams, Reservoir Dams, and Reservoirs.

Inspected by L. O. M. Date 8-14-36 Dam No. 60-06

Town Winchendon Location Millers River

Owner Mason-Parker Mfg. Co. Use

Material and Type See S.A. Torquist regard type etc. foundations, examined stone to be used.

Dam Designed by Constructed by Year

SPILLWAY—Length Feet. Depth Feet

El. top Abutment El. Crest El. Apron El. Streambed

Width top Abutment Width top Crest Width bottom Spillway

Width Flashboards carried Kind Flashboards

El. Flowline Cleanout Pipe Size and Kind Cleanout Pipe

Kind of Foundation under Spillway

Condition

EMBANKMENT—Length overall Feet

El. Top El. Natural Ground Width Top

Width of Bottom Upstream Slope Downstream Slope

Kind of Corewall Riprap

Material in Embankment Foundation

Condition

GATES Location

Size Kind El. Flowline

Condition

WHEEL Kind Size Rated H. P.

Location Ave. Head

Evidence of Leaks in Structure

Recent Repairs and Date

Topography of Country below Dam

Nature of Buildings and Roads below Dam

Number of Acres in Pond Drainage Area in Square Miles

Discharge in Second Feet per Square Mile

Estimated Storage Million Cubic Feet

COUNTY OF WORCESTER MASSACHUSETTS

COUNTY ENGINEER

Inspection of Dams, Reservoir Dams, and Reservoirs.

Inspected by L. O. M., M. M. Day Date 9/10/36 Dam No. 60-06

Town Athol Location Millers River

Owner Mason-Parker Mfg. Co. Use

Material and Type

Dam Designed by Constructed by Year

SPILLWAY—Length Feet. Depth Feet

El. top Abutment El. Crest El. Apron El. Streambed

Width top Abutment Width top Crest Width bottom Spillway

Width Flashboards carried Kind Flashboards

El. Flowline Cleanout Pipe Size and Kind Cleanout Pipe

Kind of Foundation under Spillway

Condition new foundations of new dam. Recommend same to be lowered to hardpan.

EMBANKMENT—Length overall Feet

El. Top El. Natural Ground Width Top

Width of Bottom Upstream Slope Downstream Slope

Kind of Corewall Riprap

Material in Embankment Foundation

Condition

GATES Location

Size Kind El. Flowline

Condition

WHEEL Kind Size Rated H. P.

Location Ave. Head

Evidence of Leaks in Structure

Recent Repairs and Date

Topography of Country below Dam

Nature of Buildings and Roads below Dam

Number of Acres in Pond Drainage Area in Square Miles

Discharge in Second Feet per Square Mile

Estimated Storage Million Cubic Feet

COUNTY OF WORCESTER MASSACHUSETTS

COUNTY ENGINEER

Inspection of Dams, Reservoir Dams, and Reservoirs.

Inspected by LOM, J.E.Young, C.A.Tornquist Date 9/19/36 Dam No. 160-06

Town Winchendon Location Millers River

Owner Mason-Parker Mfg. Co. Use

Material and Type

Dam Designed by Constructed by Year

SPILLWAY—Length Feet. Depth Feet

El. top Abutment El. Crest El. Apron El. Streambed

Width top Abutment Width top Crest Width bottom Spillway

Width Flashboards carried Kind Flashboards

El. Flowline Cleanout Pipe Size and Kind Cleanout Pipe

Kind of Foundation under Spillway

Condition Examine foundation under same large boulders--hardpan. Recomme test holes be made for ledge.

EMBANKMENT—Length overall Feet

El. Top El. Natural Ground Width Top

Width of Bottom Upstream Slope Downstream Slope

Kind of Corewall Riprap

Material in Embankment Foundation

Condition Poor concrete being placed. Easterly abutment

GATES Location

Size Kind El. Flowline

Condition

WHEEL Kind Size Rated H. P.

Location Ave. Head

Evidence of Leaks in Structure

Recent Repairs and Date

Topography of Country below Dam

Nature of Buildings and Roads below Dam

Number of Acres in Pond Drainage Area in Square Miles

Discharge in Second Feet per Square Mile

Estimated Storage Million Cubic Feet

HUNTS POND DAM

COUNTY OF WORCESTER MASSACHUSETTS

COUNTY ENGINEER

Inspection of Dams, Reservoir Dams, and Reservoirs.

Inspected by L. O. M. Date 9/20/36 Dam No. 60-06

Town Winchendon Location Millers River

Owner Mason-Parker Mfg. Co. Use

Material and Type

Dam Designed by Constructed by Year

SPILLWAY—Length Feet. Depth Feet

El. top Abutment El. Crest El. Apron El. Streambed

Width top Abutment Width top Crest Width bottom Spillway

Width Flashboards carried Kind Flashboards

El. Flowline Cleanout Pipe Size and Kind Cleanout Pipe

Kind of Foundation under Spillway

Condition Placing poor quality concretein tow of dam for cut-off 4 ft. wide should have been concrete base and masonry.

EMBANKMENT—Length overall Feet

El. Top El. Natural Ground Width Top

Width of Bottom Upstream Slope Downstream Slope

Kind of Corewall Riprap

Material in Embankment Foundation

Condition

GATES Location

Size Kind El. Flowline

Condition

WHEEL Kind Size Rated H. P.

Location Ave. Head

Evidence of Leaks in Structure

Recent Repairs and Date

Topography of Country below Dam

Nature of Buildings and Roads below Dam

Number of Acres in Pond Drainage Area in Square Miles

Discharge in Second Feet per Square Mile

Estimated Storage Million Cubic Feet

COUNTY OF WORCESTER MASSACHUSETTS

COUNTY ENGINEER

Inspection of Dams, Reservoir Dams, and Reservoirs.

Inspected by C. C. Crockett, Jones L. O. M., Chapman, Young Date 9/24/36 Dam No. 6 [illegible]

Town Winchendon Location Millers River

Owner Mason-Parker Mfg. Co. Use

Material and Type

Dam Designed by Constructed by Year

SPILLWAY—Length Feet. Depth Feet

El. top Abutment El. Crest El. Apron El. Streambed

Width top Abutment Width top Crest Width bottom Spillway

Width Flashboards carried Kind Flashboards

El. Flowline Cleanout Pipe Size and Kind Cleanout Pipe

Kind of Foundation under Spillway

Condition under construction--granite masonry being placed--about 60% cut-off in place

EMBANKMENT—Length overall Feet

El. Top El. Natural Ground Width Top

Width of Bottom Upstream Slope Downstream Slope

Kind of Corewall Riprap

Material in Embankment Foundation

Condition

GATES Location

Size Kind El. Flowline

Condition Concrete bed in place

WHEEL Kind Size Rated H. P.

Location Ave. Head

Evidence of Leaks in Structure

Recent Repairs and Date

Topography of Country below Dam

Nature of Buildings and Roads below Dam

Number of Acres in Pond Drainage Area in Square Miles

Discharge in Second Feet per Square Mile

Estimated Storage Million Cubic Feet

COUNTY OF WORCESTER MASSACHUSETTS

COUNTY ENGINEER

Inspection of Dams, Reservoir Dams, and Reservoirs.

Inspected by L. O. M. Date 10-5-36 Dam No. 60-06

Town Winchendon Location Millers River

Owner Mason-Parker Mfg. Co. Use

Material and Type

Dam Designed by Constructed by Year

SPILLWAY—Length Feet. Depth Feet

El. top Abutment El. Crest El. Apron El. Streambed

Width top Abutment Width top Crest Width bottom Spillway

Width Flashboards carried Kind Flashboards

El. Flowline Cleanout Pipe Size and Kind Cleanout Pipe

Kind of Foundation under Spillway

Condition completed. Back fill finished against concrete heel. Water flowing over crest. Walkway completed. Flash boards not in place.

EMBANKMENT—Length overall Feet

El. Top El. Natural Ground Width Top

Width of Bottom Upstream Slope Downstream Slope

Kind of Corewall Riprap

Material in Embankment Foundation

Condition

GATES Location

Size Kind El. Flowline

Condition

WHEEL Kind Size Rated H. P.

Location Ave. Head

Evidence of Leaks in Structure

Recent Repairs and Date

Topography of Country below Dam

Nature of Buildings and Roads below Dam

Number of Acres in Pond Drainage Area in Square Miles

Discharge in Second Feet per Square Mile

Estimated Storage Million Cubic Feet

HUNTS POND DAM

COUNTY OF WORCESTER MASSACHUSETTS

COUNTY ENGINEER

Inspection of Dams, Reservoir Dams, and Reservoirs.

Inspected by L. O. M. Date 10-7-36 Dam No. 60-66

Town Winchendon Location Millers River

Owner [illegible] Mfg. Co. Use

Material and Type

Dam Designed by Constructed by Year

SPILLWAY—Length Feet. Depth Feet

El. top Abutment El. Crest El. Apron El. Streambed

Width top Abutment Width top Crest Width bottom Spillway

Width Flashboards carried Kind Flashboards

El. Flowline Cleanout Pipe Size and Kind Cleanout Pipe

Kind of Foundation under Spillway

Condition under construction

EMBANKMENT—Length overall Feet

El. Top El. Natural Ground Width Top

Width of Bottom Upstream Slope Downstream Slope

Kind of Corewall Riprap

Material in Embankment Foundation

Condition Placing rein. steel in slab over gate. Poor bends and poorly placed 5/8 inch rods. About 8 inches every other rod. Too much water in concrete.

GATES Location

Size Kind El. Flowline

Condition

WHEEL Kind Size Rated H. P.

Location Ave. Head

Evidence of Leaks in Structure

Recent Repairs and Date

Topography of Country below Dam

Nature of Buildings and Roads below Dam

Number of Acres in Pond Drainage Area in Square Miles

Discharge in Second Feet per Square Mile

Estimated Storage Million Cubic Feet

COUNTY OF WORCESTER MASSACHUSETTS

COUNTY ENGINEER

Inspection of Dams, Reservoir Dams, and Reservoirs.

Inspected by L. O. J. Date 10-14-36 Dam No. 60-06

Town Winchendon Location Millers River

Owner Mason-Parker Mfg. Co. Use

Material and Type

Dam Designed by Constructed by Year

SPILLWAY—Length Feet. Depth Feet

El. top Abutment El. Crest El. Apron El. Streambed

Width top Abutment Width top Crest Width bottom Spillway

Width Flashboards carried Kind Flashboards

El. Flowline Cleanout Pipe Size and Kind Cleanout Pipe

Kind of Foundation under Spillway

Condition Check depth to foundations in spillway. Check cement mix - using too wet a mix - corrected.

EMBANKMENT—Length overall Feet

El. Top El. Natural Ground Width Top

Width of Bottom Upstream Slope Downstream Slope

Kind of Corewall Riprap

Material in Embankment Foundation

Condition

GATES Location

Size Kind El. Flowline

Condition

WHEEL Kind Size Rated H. P.

Location Ave. Head

Evidence of Leaks in Structure

Recent Repairs and Date

Topography of Country below Dam

Nature of Buildings and Roads below Dam

Number of Acres in Pond Drainage Area in Square Miles

Discharge in Second Feet per Square Mile

Estimated Storage Million Cubic Feet

COUNTY OF WORCESTER MASSACHUSETTS

COUNTY ENGINEER

Inspection of Dams, Reservoir Dams, and Reservoirs.

Inspected by L. O. M. Date 10-25-36 Dam No. 60-06

Town Winchendon Location Millers River

Owner Mason-Parker Mfg. Co. Use

Material and Type Quality of work is satisfactory

Dam Designed by Constructed by Year

SPILLWAY—Length Feet. Depth Feet

El. top Abutment El. Crest El. Apron El. Streambed

Width top Abutment Width top Crest Width bottom Spillway

Width Flashboards carried Kind Flashboards

El. Flowline Cleanout Pipe Size and Kind Cleanout Pipe

Kind of Foundation under Spillway

Condition ½ wasteweir completed. Excavation under way for other ½ of same

EMBANKMENT—Length overall Feet

El. Top El. Natural Ground Width Top

Width of Bottom Upstream Slope Downstream Slope

Kind of Corewall Riprap

Material in Embankment Foundation

Condition

GATES Location

Size Kind El. Flowline

Condition

WHEEL Kind Size Rated H. P.

Location Ave. Head

Evidence of Leaks in Structure

Recent Repairs and Date

Topography of Country below Dam

Nature of Buildings and Roads below Dam

Number of Acres in Pond Drainage Area in Square Miles

Discharge in Second Feet per Square Mile

Estimated Storage Million Cubic Feet

COUNTY OF WORCESTER MASSACHUSETTS

COUNTY ENGINEER

Inspection of Dams, Reservoir Dams, and Reservoirs.

Inspected by L.O.M., C.E. Tornquist Date 10-29-36 Dam No. 60-06

Town Winchendon Location

Owner Mason-Parker Mfg. Co. Use

Material and Type

Dam Designed by Constructed by Year

SPILLWAY—Length Feet. Depth Feet

El. top Abutment El. Crest El. Apron El. Streambed

Width top Abutment Width top Crest Width bottom Spillway

Width Flashboards carried Kind Flashboards

El. Flowline Cleanout Pipe Size and Kind Cleanout Pipe

Kind of Foundation under Spillway

Condition ½ wasteweir completed and back filled. Remainder has wire mesh placed and finish coat to be poured.

EMBANKMENT—Length overall Feet

El. Top El. Natural Ground Width Top

Width of Bottom Upstream Slope Downstream Slope

Kind of Curewall Riprap

Material in Embankment Foundation

Condition

GATES Location

Size Kind El. Flowline

Condition

WHEEL Kind Size Rated H. P.

Location Ave. Head

Evidence of Leaks in Structure

Recent Repairs and Date

Topography of Country below Dam

Nature of Buildings and Roads below Dam

Number of Acres in Pond Drainage Area in Square Miles

Discharge in Second Feet per Square Mile

Estimated Storage Million Cubic Feet

HUNTS POND DAM

COUNTY OF WORCESTER MASSACHUSETTS

COUNTY ENGINEER

Inspection of Dams, Reservoir Dams, and Reservoirs.

Inspected by L.O.Marden Date July 24, 1938 Dam No. 60-06

Town Winchendon Location High St Pond-

Owner Mason-Parker Mfg Co. Use

Material and Type

Dam Designed by Constructed by Year

SPILLWAY

El. top Abutment El. Crest El. Apron El. Streambed

Width top Abutment Width top Crest Width bottom Spillway

Width Flashboards carried Kind Flashboards

El. Flowline Cleanout Pipe Size and Kind Cleanout Pipe

Kind of Foundation under Spillway

Condition OK

EMBANKMENT

El. Top El. Natural Ground Width Top

Width of Bottom Upstream Slope Downstream Slope

Kind of Corewall Riprap

Material in Embankment Foundation

Condition OK

GATES Location

Size Kind El. Flowline

Condition OK

WHEEL Kind Size Rated H. P.

Location Ave. Head

Evidence of Leaks in Structure

Recent Repairs and Date

Topography of Country below Dam

Nature of Buildings and Roads below Dam

Number Acres in Pond Drainage Area in Square Miles

Discharge in Second Feet per Square Mile

Estimated Storage Million Cubic Feet

COUNTY OF WORCESTER MASSACHUSETTS
COUNTY ENGINEER

Inspection of Dams, Reservoir Dams, and Reservoirs.

Inspected by Chapman-Vice President L.O.Marden-Hunt-Casella Date 9-22-1938 Dam No. 60-06

Town Winchendon Location Mill Pond-High St.

Owner Mason-Parker Mfg Co. Use power

Material and Type

Dam Designed by Constructed by Year

SPILLWAY

El. top Abutment El. Crest El. Apron El. Streambed

Width top Abutment Width top Crest Width bottom Spillway

Width Flashboards carried Kind Flashboards

El. Flowline Cleanout Pipe Size and Kind Cleanout Pipe

Kind of Foundation under Spillway

Condition O.K. high water about 6 inches below top concrete abutments.

EMBANKMENT

El. Top El. Natural Ground Width Top

Width of Bottom Upstream Slope Downstream Slope

Kind of Corewall Riprap

Material in Embankment Foundation

Condition O.K.

GATES Location

Size Kind El. Flowline

Condition OK.

WHEEL Kind Size Rated H. P.

Location Ave. Head

Evidence of Leaks in Structure

Recent Repairs and Date

Topography of Country below Dam

Nature of Buildings and Roads below Dam

Number Acres in Pond Drainage Area in Square Miles

Discharge in Second Feet per Square Mile

Estimated Storage Million Cubic Feet

WORCESTER COUNTY ENGINEER

Inspection of Dams, Reservoir Dams, and Reservoirs

Inspected by M. F. Hunt Date 10-14-38 Dam No. 60-06

Town Winchendon Location Millers River

Owner Mason & Parker Use

SPILLWAY

El.top Abutment El.Crest El.Apron El.St.Bed

Width top Abut. Width top Crest Width bottom Sp.way

Width flashboards Kind Flashboards

El.Flowline Cleanout Pipe Size and Kind Pipe

Kind of Foundation under Spillway

Condition Two flashboard supports taken away. Now replaces with temporary ones

EMBANKMENT

El.Top El.Natural Ground Width Top

Width of Bottom Upstream Slope Downstream Slope

Kind of Coreswall Riprap

Material in Embankment Foundation

Condition OK

GATES Location

Size Kind El.Flowline

Condition OK

Evidence of Leaks in Structure

Recent Repairs and Date

Number Acres in Pond Drainage Area in Sq.Miles

Discharge in Second Feet per Square Mile

Estimated Storage Million Cubic Feet

COUNTY OF WORCESTER MASSACHUSETTS
COUNTY ENGINEER

Inspection of Dams, Reservoir Dams, and Reservoirs.

Inspected by L. O. Marden Date 11-15-1938 Dam No. 60-06

Town Winchendon Location Mill Pond. High St.

Owner Mason-Parker Mfg Co., Use

Material and Type

Dam Designed by Constructed by Year

SPILLWAY

El. top Abutment El. Crest El. Apron El. Streambed

Width top Abutment Width top Crest Width bottom Spillway

Width Flashboards carried Kind Flashboards

El. Flowline Cleanout Pipe Size and Kind Cleanout Pipe

Kind of Foundation under Spillway

Condition O.K. stanchion boards at legal level.

EMBANKMENT

El. Top El. Natural Ground Width Top

Width of Bottom Upstream Slope Downstream Slope

Kind of Corewall Riprap

Material in Embankment Foundation

Condition O.K.

GATES Location

Size Kind El. Flowline

Condition

WHEEL Kind Size Rated H. P.

Location Ave. Head

Evidence of Leaks in Structure

Recent Repairs and Date

Topography of Country below Dam

Nature of Buildings and Roads below Dam

Number Acres in Pond Drainage Area in Square Miles

Discharge in Second Feet per Square Mile

Estimated Storage Million Cubic Feet

COUNTY OF WORCESTER MASSACHUSETTS
COUNTY ENGINEER

Inspection of Dams, Reservoir Dams, and Reservoirs.

Inspected by L.O.Marden Date 4-13-1940 Dam No. 60-06

Town Winchendon Location Millers River.
Owner Mason & Parker Mfg Co. Use
Material and Type

Dam Designed by Constructed by Year

SPILLWAY

El. top Abutment El. Crest El. Apron El. Streambed
Width top Abutment Width top Crest Width bottom Spillway
Width Flashboards carried Kind Flashboards
El. Flowline Cleanout Pipe Size and Kind Cleanout Pipe
Kind of Foundation under Spillway
Condition OK-high water

EMBANKMENT

El. Top El. Natural Ground Width Top
Width of Bottom Upstream Slope Downstream Slope
Kind of Corewall Riprap
Material in Embankment Foundation
Condition OK

GATES Location
Size Kind El. Flowline
Condition OK

WHEEL Kind Size Rated H. P.
Location Ave. Head
Evidence of Leaks in Structure none visible.

Recent Repairs and Date
Topography of Country below Dam

Nature of Buildings and Roads below Dam

Number Acres in Pond Drainage Area in Square Miles
Discharge in Second Feet per Square Mile
Estimated Storage Million Cubic Feet

WORCESTER COUNTY ENGINEER

Inspection of Dams, Reservoir Dams, and Reservoirs

Inspected by Lom. W. E. Chapman Date 12-1-41 Dam No. 60-06

Town Winchington Location

Owner Mason-Parker Mfg Co. Use

SPILLWAY

El.top Abutment El.Crest El.Apron El.St.Bed

Width top Abut. Width top Crest Width bottom Sp.way

Width flashboards Kind Flashboards

El.Flowline Cleanout Pipe Size and Kind Pipe

Kind of Foundation under Spillway

Condition Ok - should rebuild earth fill back of the eastern concrete abt. - should build splash apron of quarry run granite at the downstream toe of the ogee spillway

EMBANKMENT

El.Top El.Natural Ground Width Top

Width at Bottom Upstream Slope Downstream Slope

Kind of Corewall Riprap

Material in Embankment Foundation

Condition

GATES Location

Size Kind El.Flowline

Condition

Evidence of Leaks in Structure

Recent Repairs and Date

Number Acres in Pond Drainage Area in Sq.Miles

Discharge in Second Feet per Square Mile

Estimated Storage Million Cubic Feet

COUNTY OF WORCESTER MASSACHUSETTS

COUNTY ENGINEER

Inspection of Dams, Reservoir Dams, and Reservoirs.

Inspected by [illegible] Date Feb 26 1944 Dam No. 60:06

Town [illegible] Location [illegible]

Owner [illegible] Use [illegible]

Material and Type

Dam Designed by Constructed by Year

SPILLWAY

El. top Abutment El. Crest El. Apron El. Streambed

Width top Abutment Width top Crest Width bottom Spillway

Width Flashboards carried Kind Flashboards

El. Flowline Cleanout Pipe Size and Kind Cleanout Pipe

Kind of Foundation under Spillway

Condition OK New Concrete Dam Holes in channel at foot of spillway washed out by floods

EMBANKMENT

El. Top El. Natural Ground Width Top

Width of Bottom Upstream Slope Downstream Slope

Kind of Corewall Riprap

Material in Embankment Foundation

Condition

GATES Location

Size Kind El. Flowline

Condition

WHEEL Kind Size Rated H. P.

Location Ave. Head

Evidence of Leaks in Structure

Recent Repairs and Date

Topography of Country below Dam

Nature of Buildings and Roads below Dam

Number Acres in Pond Drainage Area in Square Miles

Discharge in Second Feet per Square Mile

Estimated Storage Million Cubic Feet

TOWN Winchendon DAM NO. 60-06

LOCATION At plant STREAM Millers

WORCESTER COUNTY ENGINEERING DEPARTMENT

WORCESTER, MASSACHUSETTS

DAM INSPECTION REPORT

OWNED BY Mason-Parker Mfg Co. PLACE Winchendon USE power

INSPECTED BY LOM DATE Oct.17,1946

TYPE OF DAM concrete-earth emb CONDITION fair to good

SPILLWAY

FLASHBOARDS IN PLACE semi.auto-trips RECENT REPAIRS none.

CONDITION I beams holding trip bent due to water being caried too hi

REPAIRS NEEDED should reinforce these beams.
should place large quarry run stone at toe of spillway

EMBANKMENT

RECENT REPAIRS none

CONDITION needs filling in back of abutments

REPAIRS NEEDED fill in back of abutments

GATES

RECENT REPAIRS none

CONDITION appear OK

REPAIRS NEEDED none

LEAKS

HOW SERIOUS none visible.

DATE

COUNTY ENGINEER

TOWN Winchendon

LOCATION Winchendon

THIS DAM NEEDS ATTENTION

DAM NO. 60-06

STREAM Millers R

WORCESTER COUNTY ENGINEERING DEPARTMENT

WORCESTER, MASSACHUSETTS

DAM INSPECTION REPORT

OWNED BY Mason & Parker Mfg Co. PLACE Winchendon USE power

INSPECTED BY L.O.Marden DATE Oct.16,1947

TYPE OF DAM Concrete ogee, with semi-automatic tria CONDITION fair to go

SPILLWAY

FLASHBOARDS IN PLACE stanchion boards RECENT REPAIRS none

CONDITION fair, except see below.

REPAIRS NEEDED need cross struts in panels to prevent bulge in cat al when carrying water to high. Holes at toe spillway inchannel not refilled.

EMBANKMENT

RECENT REPAIRS none

CONDITION washed out back of east spillway abutment.

REPAIRS NEEDED refill back of east spillway abutment.

GATES

RECENT REPAIRS none

CONDITION good

REPAIRS NEEDED none

LEAKS

HOW SERIOUS none visible.

DATE Oct.16,1947

L. O. Marden
COUNTY ENGINEER

HUNTS POND DAM

TOWN Winchendon DAM NO. 60-06

LOCATION 60-07 STREAM

WORCESTER COUNTY ENGINEERING DEPARTMENT

WORCESTER, MASSACHUSETTS

DAM INSPECTION REPORT

OWNED BY Mason - Parker Mfg Co PLACE Winchendon USE Power

INSPECTED BY LOM DATE July 8, 1948

TYPE OF DAM Spillway CONDITION

SPILLWAY

FLASHBOARDS IN PLACE Stanchion Bds RECENT REPAIRS None

CONDITION Should reinforce the trip holding stanchion B.

REPAIRS NEEDED

EMBANKMENT

RECENT REPAIRS None

CONDITION Fill on So. side spillway abt

REPAIRS NEEDED " " " " " "

GATES

RECENT REPAIRS None

CONDITION Good

REPAIRS NEEDED None

LEAKS

HOW SERIOUS

DATE

COUNTY ENGINEER

TOWN Winchendon DAM NO. 60-06

LOCATION Mason Parker Plant STREAM Millers R.

WORCESTER COUNTY ENGINEERING DEPARTMENT

WORCESTER, MASSACHUSETTS

DAM INSPECTION REPORT

OWNED BY Mason-Parker Mfg Co PLACE Winchendon USE woodwork sh.

INSPECTED BY LOM DATE May 16, 1950

TYPE OF DAM ogee concrete pitch & fireboy earth shut CONDITION good except as follows

SPILLWAY

FLASHBOARDS IN PLACE Stanchion boards RECENT REPAIRS None

CONDITION Should put x struts in walking section

REPAIRS NEEDED " " " " " " "

Should fill channel downstream toe with rip rap.

EMBANKMENT

RECENT REPAIRS None

CONDITION fill downstream side easterly embankment

REPAIRS NEEDED " " " " "

GATES

RECENT REPAIRS None

CONDITION good

REPAIRS NEEDED None

LEAKS

HOW SERIOUS See none.

DATE May 16, 1950

L. O. Marion
COUNTY ENGINEER

TOWN Winchendon DAM NO. 60-06.

LOCATION Mill Pond STREAM Millers R.

WORCESTER COUNTY ENGINEERING DEPARTMENT

WORCESTER, MASSACHUSETTS

DAM INSPECTION REPORT

OWNED BY Mason-Parker Mfg Co. PLACE Winchendon USE power,etc.

INSPECTED BY LOM DATE Dec.12, 1951.

TYPE OF DAM Earth, ogee stone & concrete spillway CONDITION spillway good

SPILLWAY

FLASHBOARDS IN PLACE stanchion boards RECENT REPAIRS none

CONDITION steel cat walk frame should have cross struts welded in plac

REPAIRS NEEDED " " " " " " " " " " "

spillway channel should be filled below spillway with stones to form rough apron.

EMBANKMENT

RECENT REPAIRS none

CONDITION needs filling at east end.

REPAIRS NEEDED " " " " " .

GATES

RECENT REPAIRS

CONDITION

REPAIRS NEEDED

LEAKS

HOW SERIOUS

DATE

COUNTY ENGINEER

TOWN Winchendon DAM NO. 60-06

LOCATION STREAM

WORCESTER COUNTY ENGINEERING DEPARTMENT

WORCESTER, MASSACHUSETTS

DAM INSPECTION REPORT

OWNED BY Mason Parker Mfg Co PLACE Winchendon USE

INSPECTED BY Lom DATE 56

TYPE OF DAM Concrete - stone - stanchion bds CONDITION

SPILLWAY

FLASHBOARDS IN PLACE stan bds RECENT REPAIRS None

CONDITION Should add Stone. Steel x bracing to Horizontal truss

REPAIRS NEEDED " " " " " " " "

EMBANKMENT

RECENT REPAIRS None

CONDITION Fair

REPAIRS NEEDED —

GATES

RECENT REPAIRS None

CONDITION Fair to good

REPAIRS NEEDED None

LEAKS

HOW SERIOUS

DATE 56

Lom
COUNTY ENGINEER

TOWN Winchendon DAM NO. 6006

LOCATION Mason-Parker Mfg Co STREAM Millers River.

WORCESTER COUNTY ENGINEERING DEPARTMENT
WORCESTER, MASSACHUSETTS

DAM INSPECTION REPORT

Owned by Mason Parker Mfg Co Place Winchendon Use

Inspected by L.O.M. & Serage of M.P. Date Jan. 31, 1958

Type of Dam Stone-concrete and steel walkway Condition fair

SPILLWAY

Flashboards in Place yes stanchion bdr Recent Repairs No.

Condition Need x strut each panel - should paint all structural steel

Repairs Needed new planks in where needed - check at low water 1959

EMBANKMENT

Recent Repairs Fill at East end

Condition " " " "

Repairs Needed " " " "

GATES

Recent Repairs check gates at wheels

Condition fair

Repairs Needed

LEAKS

How Serious Non visible

DATE: Jan 31, 1958 D.D. Warden County Engineer

TOWN Winchendon DAM NO. 60-06

LOCATION 200' below High St STREAM Millers River

WORCESTER COUNTY ENGINEERING DEPARTMENT
WORCESTER, MASSACHUSETTS

DAM INSPECTION REPORT

Owned by Mason Parker Mfg Co Place Winchendon Use Mill Pond

Inspected by [illegible] Date May 27, 1959

Type of Dam _____ Condition _____

SPILLWAY

Flashboards in Place 60" of boards Recent Repairs _____

Condition Automatic trip for boards - Planks are poor and need to be

Repairs Needed replaced. All steel work on walkway bridge including steel trips, [illegible] are beginning to corrode - should be painted.

EMBANKMENT

Recent Repairs Concrete is beginning to spall in a few places

Condition - should be repaired with epoxy cement.

Repairs Needed (Pond is full to within 8" of top of boards - one plank is removed from one bay.)

GATES

Recent Repairs _____

Condition Gates look good

Repairs Needed _____

LEAKS

How Serious _____

DATE: _____ County Engineer

TOWN Winchendon DAM NO. 60-06

LOCATION 200's W'ly of High St. STREAM Millers River

WORCESTER COUNTY ENGINEERING DEPARTMENT
WORCESTER, MASSACHUSETTS

DAM INSPECTION REPORT

Owned by Family Mason Parker Mfg Co. Place Winchendon Use Mill Pond

Inspected by WOL Date July 27, 1960

Type of Dam Earth - Concrete Condition Poor

SPILLWAY

Flashboards in Place 3 to 5 boards Recent Repairs

Condition Poor - Some boards should be replaced - steel work

Repairs Needed should be painted - concrete in spillway and piers is beginning to spall

EMBANKMENT

Recent Repairs

Condition Good

Repairs Needed

GATES

Recent Repairs

Condition Fair condition

Repairs Needed Some gate timbers have deteriorated - should be replaced

LEAKS

How Serious No leaks visible - high water condition

DATE: County Engineer

TOWN [illegible] DAM NO. [illegible]

LOCATION [illegible] STREAM [illegible]

WORCESTER COUNTY ENGINEERING DEPARTMENT
WORCESTER, MASSACHUSETTS

DAM INSPECTION REPORT

Owned by [illegible] Place [illegible] Use [illegible]

Inspected by [illegible] Date Nov 6, 1964

Type of Dam Stone and concrete Condition Fair

SPILLWAY

Flashboards in Place [illegible] Recent Repairs

Condition The concrete is beginning to spall - the steel walkway should

Repairs Needed be painted. the walkway is fair. The pond is full to the top of the boards. There are 12 panels of boards and 2 tripping devices.

EMBANKMENT

Recent Repairs There are 3 small cracks in the concrete upstr. wall

Condition on the south easterly end of the dam. Additional earth fill

Repairs Needed is required on the upstr. wall. At the westerly end the dam is 20' wide between the concrete upstr. wall and the dry stone downstr. wall.

GATES

Recent Repairs

Condition Good condition

Repairs Needed

LEAKS

How Serious Numerous small leaks between the boards

DATE: County Engineer

TOWN [illegible] DAM NO. 60-06

LOCATION [illegible] STREAM [illegible]

WORCESTER COUNTY ENGINEERING DEPARTMENT
WORCESTER, MASSACHUSETTS

DAM INSPECTION REPORT

Owned by [illegible] Place [illegible] Use [illegible]

Inspected by [illegible] Date Nov. 30, 1967

Type of Dam Earth, stone and concrete Condition Good to fair

SPILLWAY

Flashboards in Place 30" of boards Recent Repairs

Condition 2 sections are 48" high - some boards should be repaired

Repairs Needed The automatic trips are ok. All of the steelwork including the walkway, should be painted.

EMBANKMENT

Recent Repairs The concrete is beginning to spall

Condition Additional earth backing is required in back of the

Repairs Needed southerly abutment wall.

GATES

Recent Repairs

Condition Small leaks are visible at the storm gate

Repairs Needed also at the flash boards

LEAKS

How Serious

DATE: County Engineer

TOWN [illegible] DAM NO. [illegible]

LOCATION [illegible] STREAM [illegible]

Old "Mason Parker Mill Pond"

WORCESTER COUNTY ENGINEERING DEPARTMENT
WORCESTER, MASSACHUSETTS

DAM INSPECTION REPORT

Owned by United Industrial Syndicate Inc. Place [illegible] Use [illegible]

Inspected by [illegible] Date Oct. 14, 1968

Type of Dam Earth and Concrete Condition Fair

SPILLWAY

Flashboards in Place Trip boards in place Recent Repairs

Condition There are 6 trip sections on this spillway

Repairs Needed Some boards are in poor condition and should be replaced

EMBANKMENT

Recent Repairs The steel walkway is badly rusted and should be

Condition painted by the owners

Repairs Needed

GATES

Recent Repairs The storm gate looks ok.

Condition It is a double stem rack & pinion operated gate

Repairs Needed - large size - vertical hand operated wheels. There are some small leaks between the boards.

LEAKS

How Serious See above

DATE: County Engineer

HUNTS POND DAM

TOWN [illegible] DAM NO. 60-06

LOCATION [illegible] STREAM [illegible]

WORCESTER COUNTY ENGINEERING DEPARTMENT
WORCESTER, MASSACHUSETTS

DAM INSPECTION REPORT

Owned by _____ Place _____ Use _____

Inspected by M.E. Hunt Date Nov 6 1968

Type of Dam _____ Condition _____

SPILLWAY

Flashboards in Place 1.5' to 3.0' Recent Repairs _____

Condition Flashboards poor shape [illegible]

Repairs Needed _____

EMBANKMENT

Recent Repairs _____

Condition _____

Repairs Needed _____

GATES

Recent Repairs _____

Condition Look O.K.

Repairs Needed _____

LEAKS

How Serious _____

DATE: _____ County Engineer

INSPECTION REPORT & DATA FOR DAMS

Dam No. 60-06
Town: Winchendon
Stream: Millers River
Pond: Hunts Pond
Date: 12-27-71
By:

Owner: Warren Harris
His Address: Russell Farm Rd. Winchendon
Function of Dam: Storage

Location & Access: Just Westerly of Bridge on Road to Hospital from center of town
USGS Quad. Winchendon Lat. 42°40'45" Long. 72°02'57"
Drain.Ar.: 54.66 Sq.Mi.; Ponds: 1.7 ac.; Res.@dam:
Character of D.A.:

CONDITION RATING
Structural: Good
Hydraulic: 90 x 9
General: Good
PRIORITY:

Estimated
Discharge
Capacity:

General Description of Dam and Discharge Control:
Concrete dam with mechanical gate. Steel I beams + platform for Flashboards, 4' of flashboards in place

Sketch (Not to Scale):

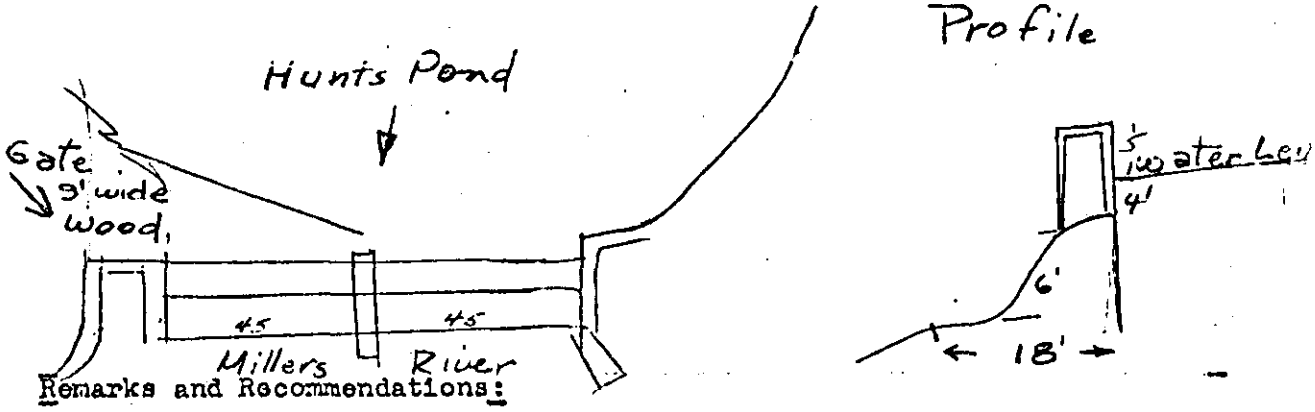

Remarks and Recommendations:

Date 12/27/71 By Eaton+Cano Comment

Dam No. 3-14-343-05

APPENDIX C

PHOTOGRAPHS

Note: Location and direction of photographs shown on Figure B-1 in Appendix B.

NO. 1 DOWNSTREAM FACE OF DAM

NO. 2 UPSTREAM FACE OF DAM

NO. 3 SPALLED CONCRETE ON UPSTREAM FACE OF NORTH RETAINING WALL

NO. 4 SPALLED CONCRETE ON DOWNSTREAM FACE OF SPILLWAY PIER

NO. 5 CREST OF SPILLWAY

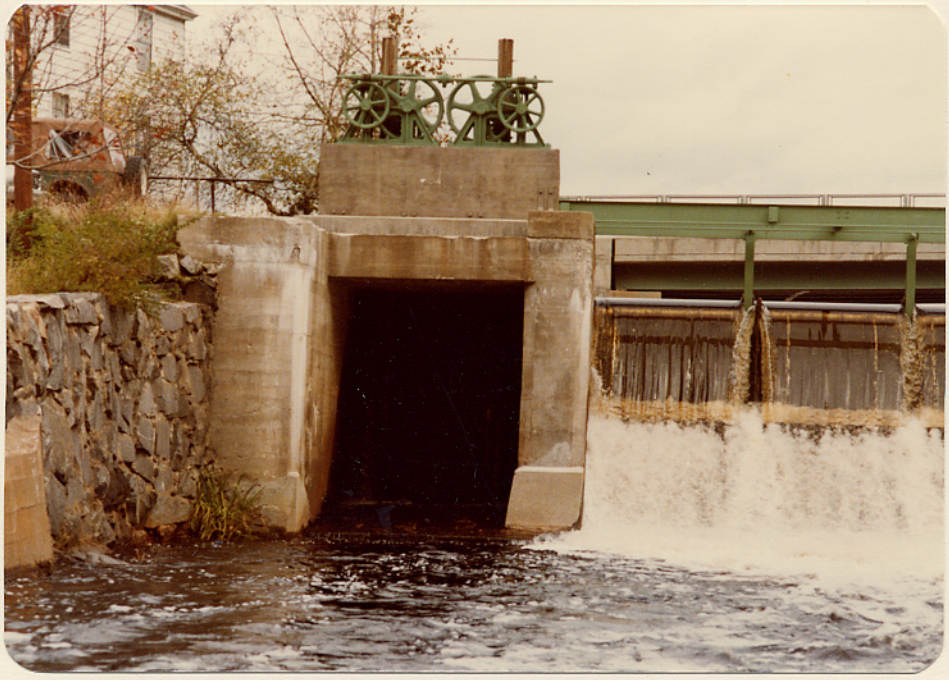

NO. 6 OUTLET GATE

NO. 7 DISCHARGE CHANNEL BELOW DAM

NO. 8 DISCHARGE CHANNEL BELOW BEND IN RIVER

APPENDIX D

HYDROLOGIC AND HYDRAULIC COMPUTATIONS

	Page
Figure D-1, Drainage Area Map	D-1
Hydrologic and Hyraulic Computations	D-2

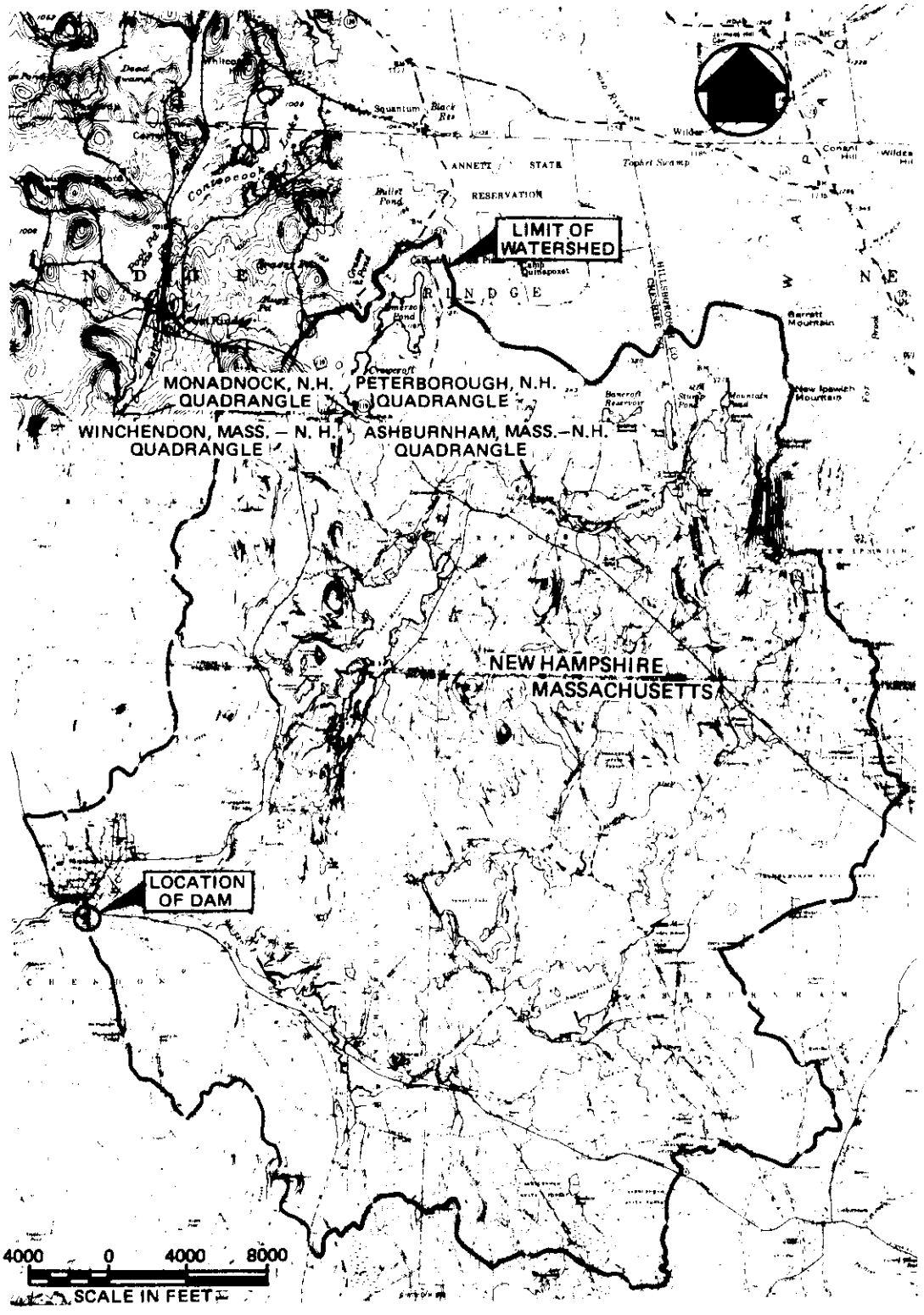

FIG. D-1 DRAINAGE AREA MAP

Rev. 11/9/79

(I) Test Flood, Storage & Storage Functions

1- Total Drainage Area - 54 mi²

2- Pond(s) Area: 3.47 mi²
Swamp(s) Area: 3.36 "
Total Area Pond(s) & Swamp(s): 6.83 "

% Ponds & Swamps = $\frac{6.83}{54}$ = 12.6%

3- Main. $\frac{1817-960}{74100}$ = 1.16%
No Br. $\frac{1316-900}{46300}$ = 0.77%
} Say Ave Slope = 1.0%

4- Using C. of E. Curves for Peak Flow Rates & above guide values the Peak Flow Rate was estimated to be slightly above Flat & Coastal and taken at 700 c.f.s./mi²
Size Class: Small ; Hazard Pot.: High ; Spill. Des. Flood: ½ to Full PMF
Use: Test Flood = Half PMF

5- Test Flood Inflow = $\frac{1}{2}$ (700) 54 = 18900 c.f.s.

6- Pond Storage
The pond area is 0.02 sq. mi. at elev. 952.0
Based on a const. area, storage increases at 12.9 ac. feet per foot of depth increase.

7- Spillway crest elev. is 947.8 without stop logs

8- Storage Functions are based on $Q_{out} = Q_{in}\left[1 - \frac{S_{out}}{R}\right]$
S_{out} = Storage Vol. in Reservoir related to final Q_{out} in terms of inches of rain over the drainage area.

S(in Inches) = $12\,D\left(\frac{.02}{54}\right) = .004\,D$; R = 6hr rain of Storm.
D = Storage depth in feet above spillway crest in reservoir

9- Storage Functions: (Test Flood & PMF)

$F_{TF} = 18900 - 1989.5\,S = 18900 - 8.84\,D$

$F_{PMF} = 37800 - 1989.5\,S = 37800 - 8.84\,D$

(II) Discharge Relations

A - Over stoplogs @ el. 952.0 - As weir

12 bays w/ stoplogs 7.5' wide. $Q_A = 3.3\, L\, H^{1.5}$; $L = 90' - 24(0.1)H$

$L = 12 \times 7.5 - 24(0.1)\, H_A = 90 - 2.4\, H_A$

H_A	1	2	3	4	5
Pond El.	953	954	955	956	957
L	87.6	85.2	82.8	80.4	78.0
Q_L	290	800	1420	2120	2880

B - Over stoplogs @ el. 952.0 - As orifice

12 orifices - 4.1' × 7.5' - w/ ℄ @ el. 954 ±

$Q_B = 12(4.1)7.5(0.6)\sqrt{2gH_B} = 1777\sqrt{H_B}$

Pond El.	957	958	960	962	964	966	968	970
H_B	3	4	6	8	10	12	14	16
Q_B	3080	3550	4350	5020	5620	6150	6650	7110

C - Over spillway crest (no stoplogs) @ el. 947.8

$Q_C = 3.9\, L\, H_C^{1.5}$; $L = 90 - 2.4H$

H_C	1.2	2.2	4.2	6.2	8.2	9.2
Pond El.	949	950	952	954	956	957
L	87.1	84.7	79.9	75.1	70.3	67.9
Q_C	450	1080	2680	4520	6440	7390

D - Over spillway - as orifice - ℄ el. 952 ±

$Q_D = 12(7.5)8.3(0.6)\sqrt{2gH_D} = 3597\sqrt{H_D}$

Pond El.	957	958	960	962	964	966	968	970
H_D	5	6	8	10	12	14	16	18
Q_D	8040	8810	10170	11370	12460	13460	14390	15260

(II) Discharge Relations - Cont.

E - Over top of stoplog support structure - @ el. 957.3

$Q = 3.3(98')H_E^{1.5} =$

H_E	0.7	2.7	4.7	6.7	8.7	10.7	12.7
Pond El.	958	960	962	964	966	968	970
Q_E	190	1430	3300	5610	8300	11320	14640

F - Over dam crest (el. 956.1) and end abutments (el. 954.4)

$q = 2.55\ H_F^{1.5}$, 20' @ el. 954.4 ±, 120' @ el. 956.1

	Pond El.	956	958	960	962	964	966	968	970
(1.6)	Q_1	100	350	680	1070	1520	2010	2560	3140
(1.9)	Q_2	–	800	2360	4390	6790	9530	12560	15860
	Q_F	100	1150	3040	5460	8310	11540	15120	19000

G - Outlet Structure

Gate can be raised 7.3 ft. in 10.5 ft high opening. Opening is 9' wide, ℄ elev. of opening is ± 945.9

$Q_G = 0.62(7.3 \times 9)\sqrt{2g\,H_G} = 326.9\sqrt{H_G}$

Pond El.	956	958	960	962	964	966	954	968	970
H_G	10.1	12.1	14.1	16.1	18.1	20.1	8.1	22.1	24.1
Q_G	1040	1140	1230	1310	1390	1470	930	1540	1600

Project Nat. Review of Non Fed. Dams Acct. No. 6356 Page 4 of 8

Subject Worcester County, Mass. Compd. By LEB Date 10/30/79

Detail HUNTS POND Ck'd. By WC Date 11/19/79 Rev. 11/9/79

(III) Discharge with Stoplogs @ El. 952, & Storage Function vs Pond Elev.

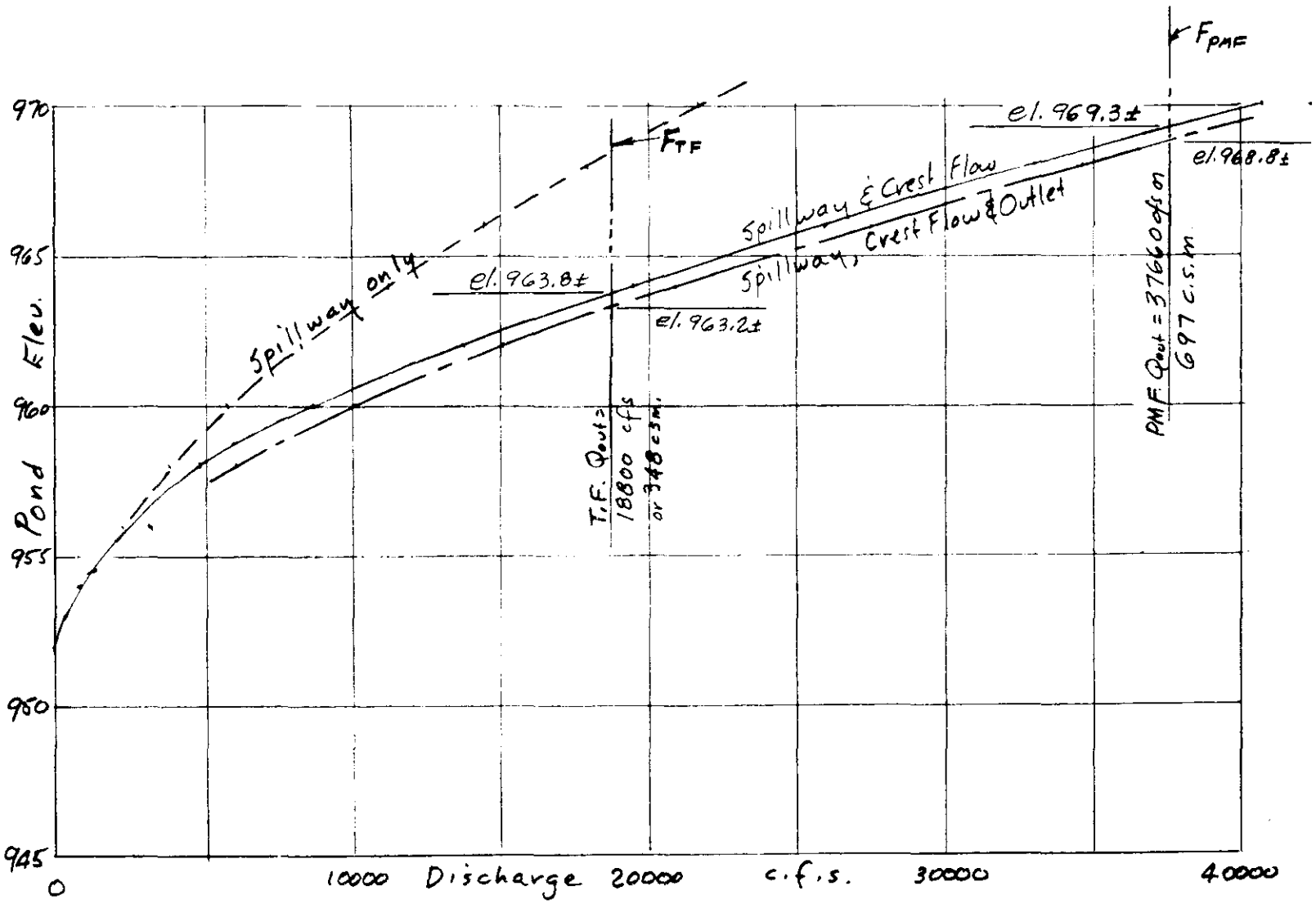

V Crest Flows

The low point on the dam is on the north abutment at elev. 954.4. $q = 2.55 H^{1.5}$

A - Without stoplogs (outlet shut)

$$q = 2.55(961.6 - 954.4)^{1.5} = 49 \text{ cfs/ft}$$

As critical flow:

$$y_c = \left(\frac{q^2}{g}\right)^{1/3} = 4.2 \text{ ft.}$$

$$V_c = 12 \text{ fps.}$$

B - With stoplogs to el. 952.0 (outlet shut)

$$q = 2.55(963.8 - 954.4)^{1.5} = 73.5 \text{ cfs/ft}$$

As critical flow:

$$y_c = 5.5$$

$$V_c = 13 \text{ fps.}$$

VI Pond Lowering

Outlet - discharge is 930± cfs with pond at el. 954±

Time to lower pond one ft. (954.4 to 953.4) is:

$$\frac{12.9\,(43560)(1)}{930\,(3600)} = 0.17 \text{ hours or 10 minutes}$$

Note: Storage in Hunt's Pond does not produce a significant reduction in outflow for flood inflows.

Project Nat. Review of Non Fed. Dams Acct. No. 6356 Page 5 of 8
Subject Worcester County, Mass. Comptd. By LEB Date 10/30/79
Detail HUNT POND Ck'd. By WC Date 11/19/79
Rev. 11/9/79

(IV) Discharge (no stoplogs), Storage, & Storage Funct. vs Pond Elev.

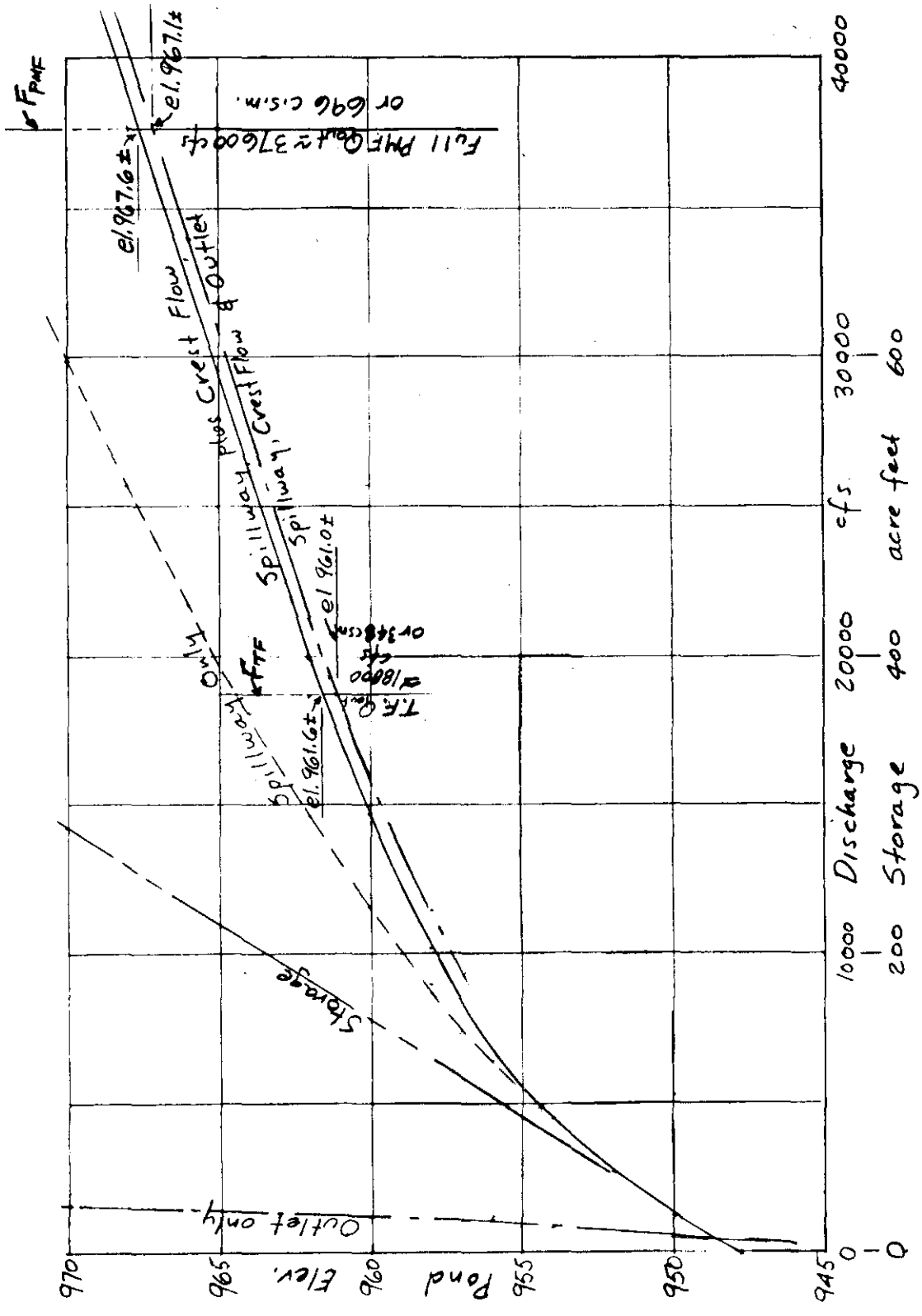

(VII) Downstream Channel

About 220' dnstr. from dam a narrows and bend occur in channel. Assume critical flow at this point for Q vs Depth relation. Channel el. 940±

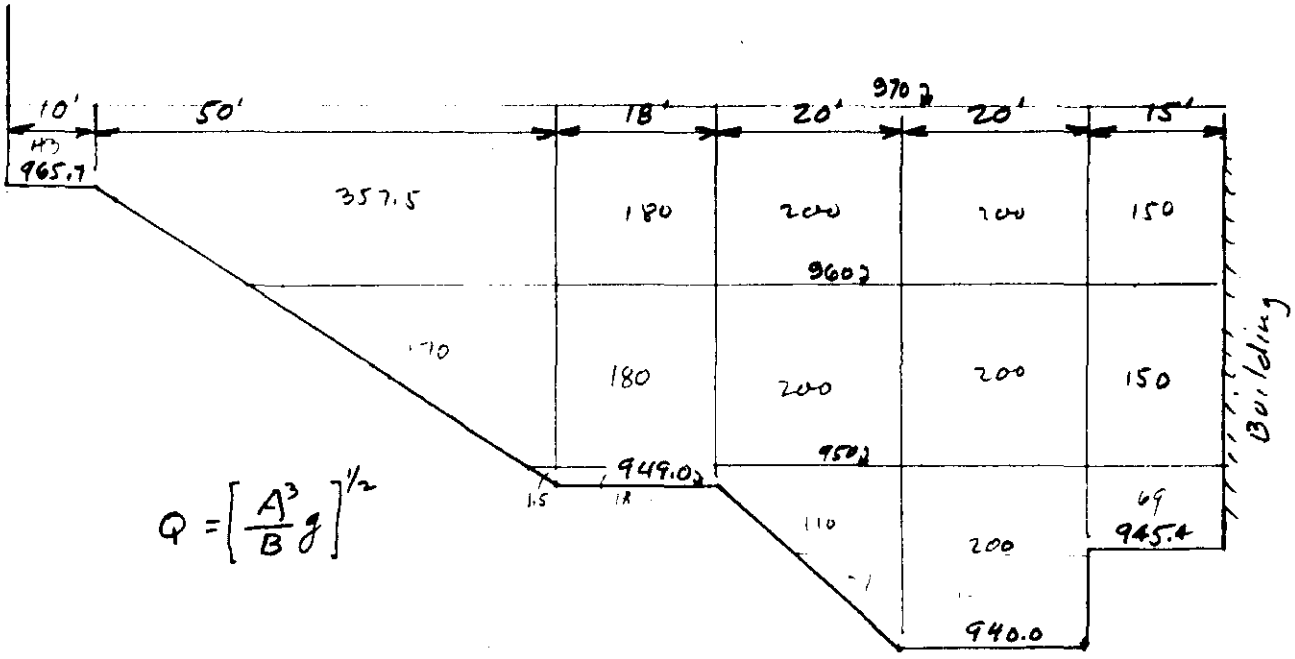

$$Q = \left[\frac{A^3}{B} g\right]^{1/2}$$

Water El.	950	960	970	955	965	945
A	398.5	1298.5	2429	803.5	1868.5	128
B	74.5	107	133	91	121	31
Q	5230	25700	58900	13550	41670	1480

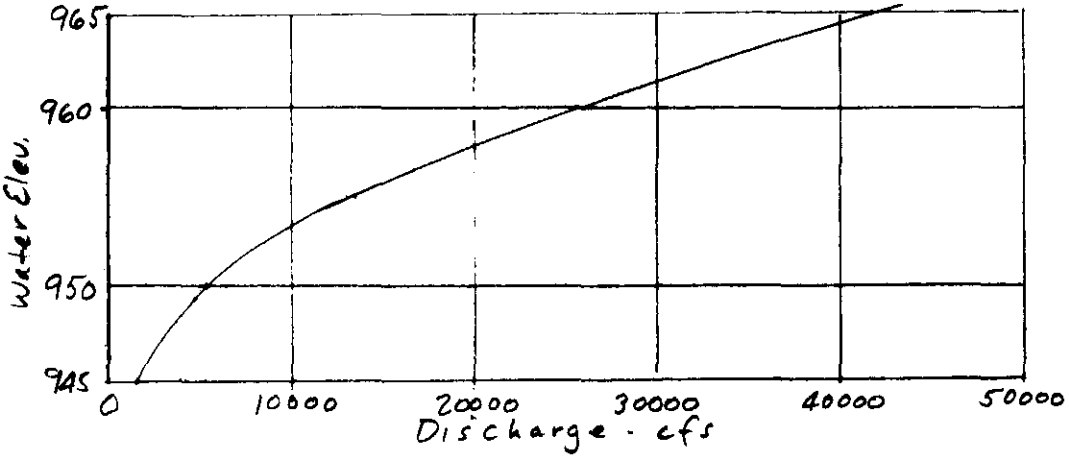

Rev. 11/9/79
Rev. 11/13/79
Rev 11/15/79

(VIII) Failure of Dam

Peak Failure Flow:

Pond Elevation - 954.4 (L.P. on crest)
Toe Elevation — 940.0 ±
Y_0 = 14.4

Dam Length Subject to Breaching = 46.7' (50% of spillway)
W_0 = 40% ( ) =

$$Q_{P_1} = 1.68\, W_0 (Y_0)^{1.5} = 1.68(46.7)(14.4)^{1.5} \cong \underline{4300 \text{ cfs}}$$

Storage Volume Released:

Storage Above Spillway 12.9ac(954.4-947.8) = 85 ac. ft.
Storage Below Spillway 12.9 ac (947.8-940) ½ = 34 " "
S = Total Storage = 119 " "

Channel Hydraulics:

See (VI). With pond at el. 954.4, discharge is 4900 cfs without stoplogs & 1030 cfs with stoplogs. With 50% of the dam failed 50% of this flow is additive to failure flow. In the case of failure without stoplogs, the water elev. at the control rises from 949± to 951 ±, and with stoplogs it rises from 944± to 950±. The depth change associated with either case might extend down stream to the pond of the next dam. Two highway bridge upstream of the dam should restrict the volume of peak failure flow.

Time to Drain:

$$\frac{43560\,(119)}{3600(\tfrac{1}{2})(4300)} = 0.67 \text{ Hours.}$$

APPENDIX E

INFORMATION AS CONTAINED IN THE NATIONAL INVENTORY OF DAMS

HUNTS POND DAM

INVENTORY OF DAMS IN THE UNITED STATES

STATE	IDENTITY NUMBER	DIVISION	STATE	COUNTY	CONGR DIST.	STATE	COUNTY	CONGR DIST.	NAME	LATITUDE (NORTH)	LONGITUDE (WEST)	REPORT DATE DAY / MO / YR
MA	654	NED	MA	027	02				HUNTS POND DAM	4240.7	7202.9	21NOV79

POPULAR NAME	NAME OF IMPOUNDMENT
	HUNTS POND

REGION	BASIN	RIVER OR STREAM	NEAREST DOWNSTREAM CITY-TOWN-VILLAGE	DIST FROM DAM (MI.)	POPULATION
01	06	MILLERS RIVER	WINCHENDON	0	6850

TYPE OF DAM	YEAR COMPLETED	PURPOSES	STRUCTURAL HEIGHT (FT.)	HYDRAULIC HEIGHT (FT.)	IMPOUNDING CAPACITIES MAXIMUM (ACRE-FT.)	IMPOUNDING CAPACITIES NORMAL (ACRE-FT.)	DIST	OWN	FED R	PRV/FED	SCS A	VER/DATE
CTRG	1930	R	16	16	120	90	NED	N	N	N	N	

REMARKS

D/S HAZ	SPILLWAY CREST LENGTH	SPILLWAY TYPE	SPILLWAY WIDTH (FT.)	MAXIMUM DISCHARGE (FT.)	VOLUME OF DAM (CY)	POWER CAPACITY INSTALLED (MW)	POWER CAPACITY PROPOSED (MW)	NAVIGATION LOCKS NO.	LENGTH (FT.)	WIDTH (FT.)	LENGTH (FT.)	WIDTH (FT.)	LENGTH (FT.)	WIDTH (FT.)	LENGTH (FT.)	WIDTH (FT.)
P	180	U	90	1030	800											

OWNER	ENGINEERING BY	CONSTRUCTION BY
MASON + PARKER MFG CO	JAMES E YOUNG	UNKNOWN

REGULATORY AGENCY			
DESIGN	CONSTRUCTION	OPERATION	MAINTENANCE
NONE	NONE	NONE	NONE

INSPECTION BY	INSPECTION DATE DAY / MO / YR	AUTHORITY FOR INSPECTION
METCALF + EDDY INC	29SEP79	PL92-367

REMARKS