U. S. ARMY CORPS
OF ENGINEERS

ROUTINE INSPECTION

OF THE

BOURNE HIGHWAY BRIDGE

OVER THE

CAPE COD CANAL - BOURNE, MA

ROUTINE INSPECTION REPORT

VOLUME II OF II

Prepared by:
A. G. Lichtenstein & Associates, Inc.
Framingham, MA
December 1998

Prepared for:
U. S. Army Corps of Engineers
New England District
North Atlantic Division

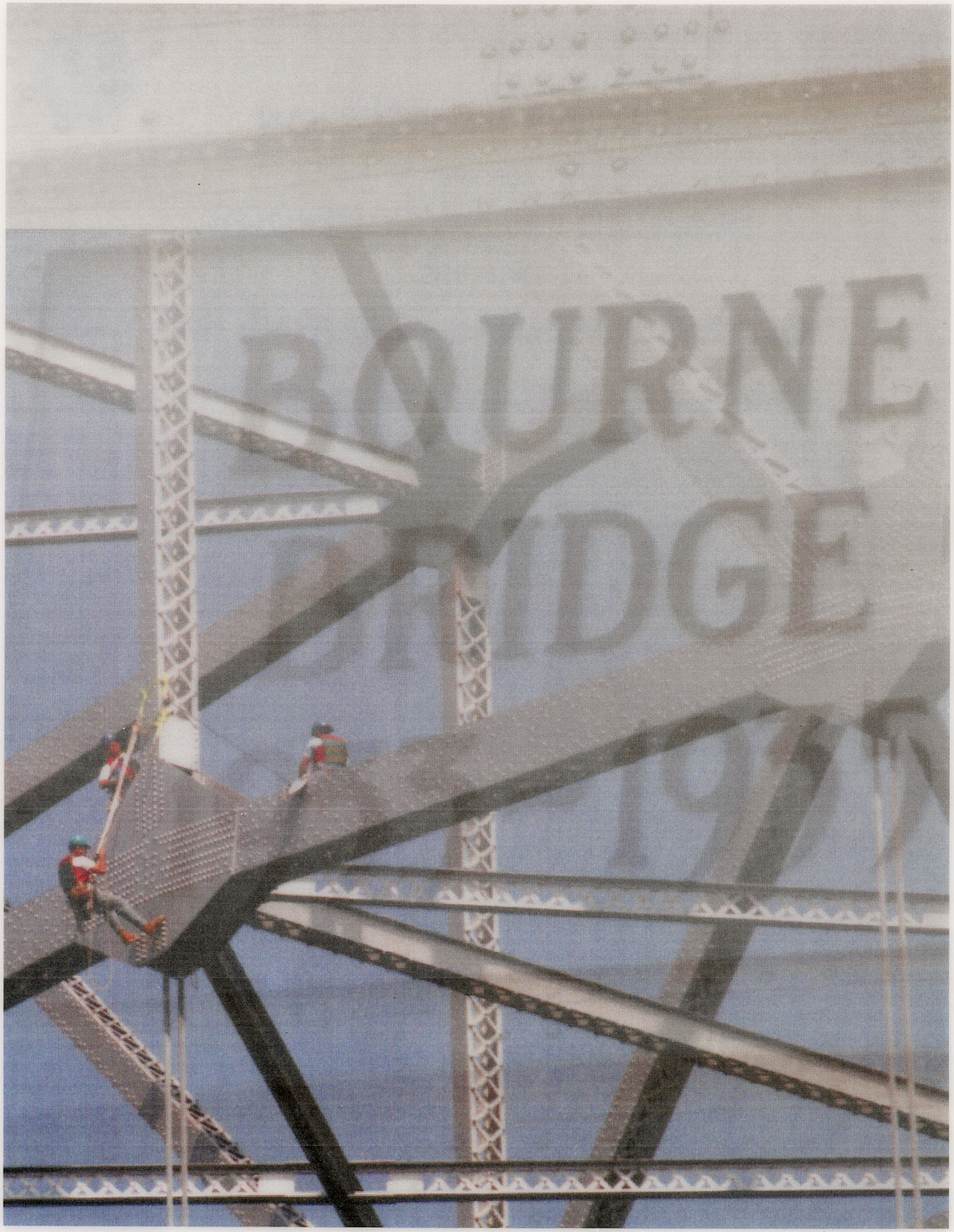
BOURNE
BRIDGE

Borne

VOLUME II

APPENDIX C

TABLE OF CONTENTS

PAGE

GENERAL PLAN & ELEVATION i
ABBREVIATIONS & LEGEND ii
TYPICAL CONDITIONS iii

I. MAIN TRUSS MEMBERS
- Span 7 1
- Span 5 5
- Span 3 9
- Span 1 13
- Span 2 24
- Span 4 30
- Span 6 34

II. FLOOR SYSTEM
- Span 7 42
- Span 5 53
- Span 3 57
- Span 1 66
- Span 2 76
- Pier 4 Expansion Joint 93
- Span 4 101
- Span 6 114

III. BEARINGS 124

IV. SUBSTRUCTURE
- South Abutment 148
- Pier 5 169
- Pier 3 173
- Pier 1 176
- Pier 2 179
- Pier 4 182
- Pier 6 185
- North Abutment 188

V. TOP OF DECK 213

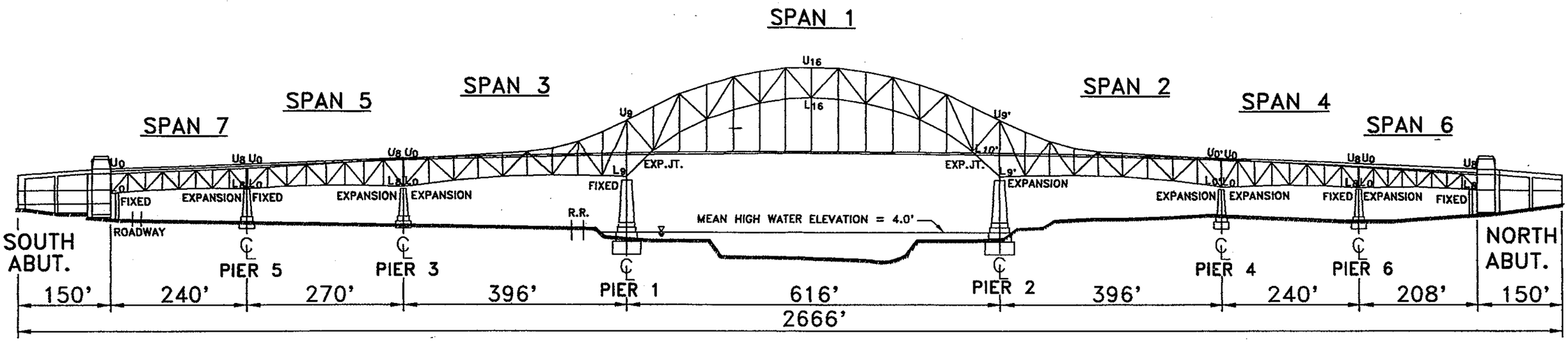

EAST ELEVATION

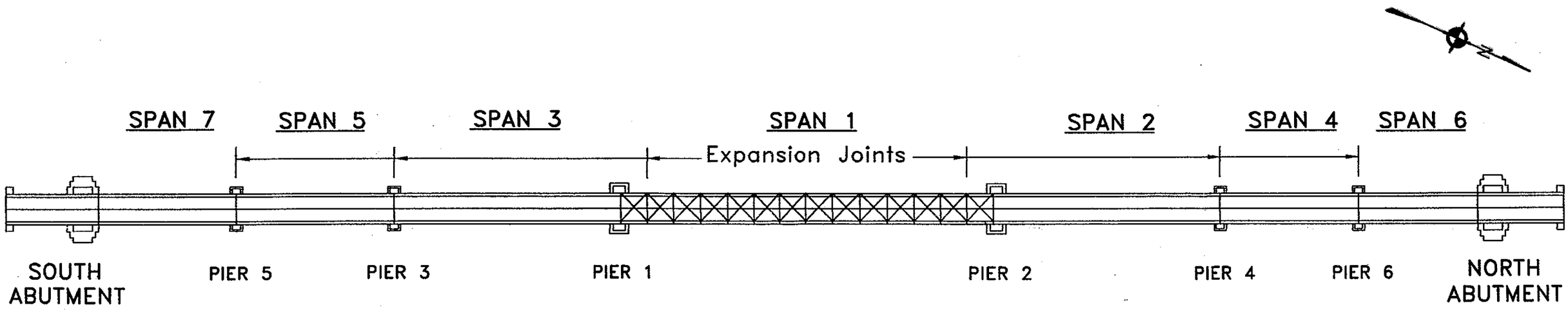

PLAN

NOTE: SPAN AND PIER NUMBERING PRESENTED ARE FROM ORIGINAL DESIGN PLANS DATED 1933.

DEPARTMENT OF THE ARMY
NEW ENGLAND DISTRICT, CORPS OF ENGINEERS

BOURNE HIGHWAY BRIDGE
ROUTINE INSPECTION

Lichtenstein
A.G. LICHTENSTEIN & ASSOCIATES, INC.
CONSULTING ENGINEERS

GENERAL PLAN & ELEVATION

FILE: BELEV24.dwg

SCALE: N.T.S.

DATE: 7/98

ABBREVIATIONS:

ORIENTATION		MEMBER TYPE		CONDITION	
BOT	BOTTOM	ABUT	ABUTMENT	AD	ABRASION DUST
BTWN	BETWEEN	∠	ANGLE	BR	BROKEN
℄	CENTER LINE	[	CHANNEL	CR	CRACK
E	EAST	CONC	CONCRETE	ø	DIAMETER
ELEV	ELEVATION	CONN	CONNECTION	EFFLO	EFFLORESCENCE
EXT	EXTERIOR	CONST	CONSTRUCTION	HL	HAIR LINE
FH	FULL HEIGHT	DIAG	DIAGONAL	HVY	HEAVY
FW	FULL WIDTH	EXP	EXPANSION	HC	HONEY COMBING
HORIZ	HORIZONTAL	FB	FLOORBEAM	ID	IMPACT DAMAGE
INT	INTERIOR	℄	FLANGE	IR	IMPACTED RUST
L	LOWER	LAT BR	LATERAL BRACING	LT	LIGHT
N	NORTH	ℙ	PLATE	LB	LOOSE BOLT
S	SOUTH	SIP	STAY IN PLACE FORM	MAX	MAXIMUM
SYM	SYMMETRICAL	STIFF	STIFFENER	MIN	MINIMUM
U	UPPER	STR	STRINGER	MED	MEDIUM
VERT	VERTICAL	JT	JOINT	MB	MISSING BOLT
W	WEST			PITT	PITTING
				REM	REMAINING
				HR	HEAVY RUST
				MR	MEDIUM RUST
				LR	LIGHT RUST
				TYP	TYPICAL
				V	VISUAL CHECK
				✓	CHECKED, OK

LEGEND

OR SPALL	SPALLED AREA
OR H	HOLLOW SOUNDING AREA (DELAMINATION)
OR MC	MAP CRACKED AREA
OR HC	HONEY COMBED AREA
OR SCALE	SCALED AREA
OR PATCH	PATCHED AREA

DEPARTMENT OF THE ARMY
NEW ENGLAND DISTRICT CORPS OF ENGINEERS

BOURNE HIGHWAY BRIDGE
ROUTINE INSPECTION

NOTES BY: LICHTENSTEIN
CONSULTING ENGINEERS

JOB #1986 | DATE: 7/98

TYPICAL TRUSS CONDITIONS:

CONDITION	DESCRIPTION
A	DRAIN PIPE SUPPORT BRACKET WELDED TO TRUSS MEMBER
B	UPTO 1/8" DEEP PITTING ON INSIDE FACE OF GUSSET PLATE, UPTO 1/2" WIDE, ALONG THE EDGES OF TRUSS MEMBERS
C	UPTO 1/8" DEEP PITTING, UPTO 1/2" HIGH ON GUSSET PLATE, ALONG THE TOP EDGE OF CROSS BRACING CONNECTION ANGLES.
D	UPTO 1/4" THICK IMPACTED RUST BETWEEN TRUSS MEMBER WEB PLATE AND SIDE PLATE OR BETWEEN ANGLES AND WEB PLATE OR BETWEEN CHANNEL WEB AND SIDE PLATE.

TYPICAL FLOOR SYSTEM CONDITIONS:

CONDITION	DESCRIPTION
R	UTILITY PIPE SUPPORT ANGLE WELDED TO FLOORBEAM WEB
S	3/4" DIAMETER DRILLED HOLES, 12" C. TO C., IN TOP FLANGE OF STRINGER
T	INSPECTION CATWALK RAILING ANGLE OUTSTANDING LEG & UPTO 3/8" HT. OF VERTICAL LEG COPED AROUND LATERAL BRACING MEMBER.
U, W	REPAIR PLATE WELDED TO OUTSTANDING LEG OF FLOORBEAM STIFFENER ANGLE.
X, AD	ABRASION DUST
Y	FLAME CUT COPE ON STRINGER WEB AT FLOORBEAM TOP FLANGE

TYPICAL CONDITIONS	
DEPARTMENT OF THE ARMY NEW ENGLAND DISTRICT CORPS OF ENGINEERS	
BOURNE HIGHWAY BRIDGE ROUTINE INSPECTION	
NOTES BY: LICHTENSTEIN CONSULTING ENGINEERS	
JOB #1986	DATE: 8/20/98
CREW: EL, WW, FP, PWN, SD, MM	SHEET 1 OF 1

I. MAIN TRUSS MEMBERS

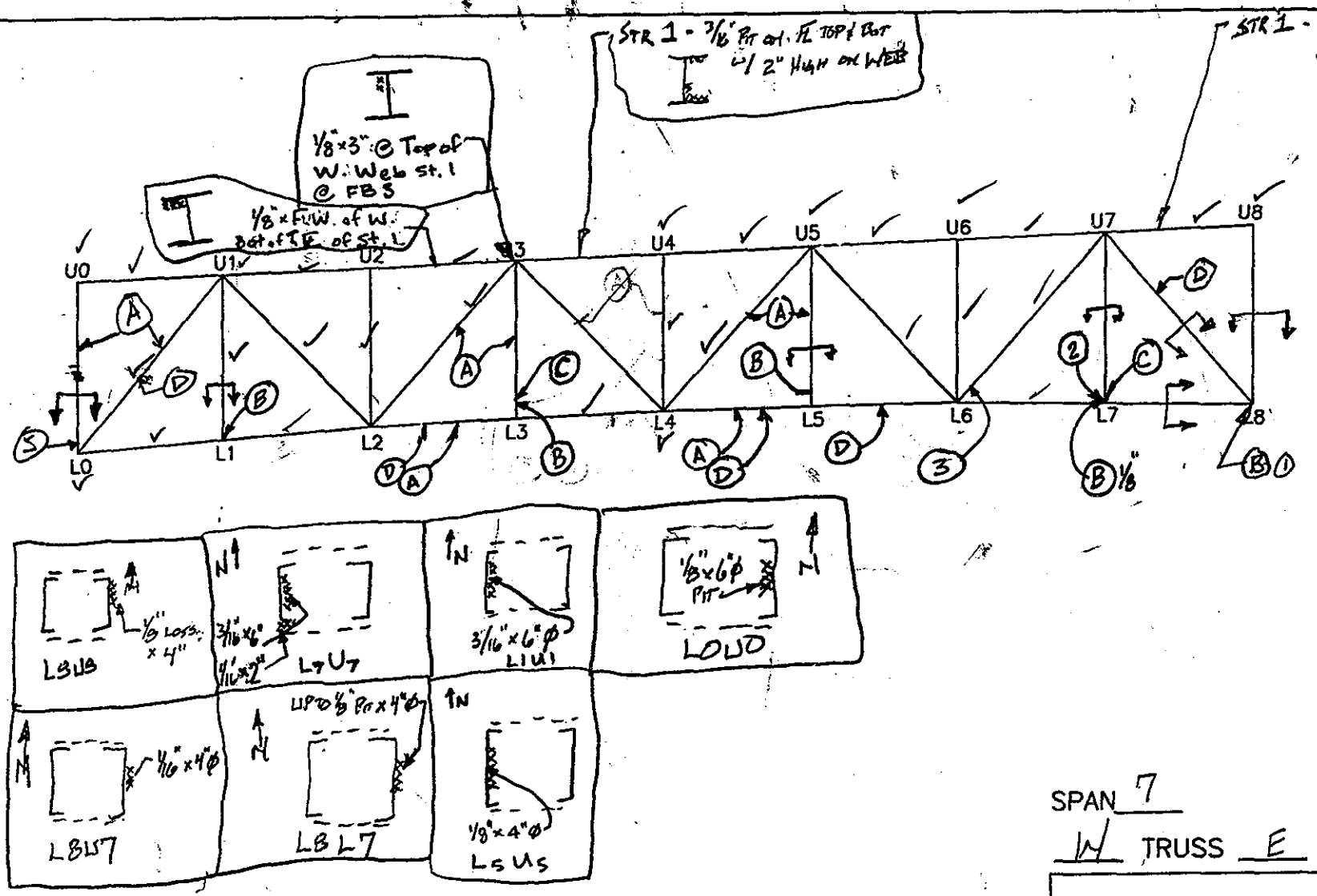

SPAN 7

W TRUSS E ELEVATION

NOTES:

1. 1/2" IR Btwn E. Gusset PL & 2nd E. Gusset PL
2. 1/2" IR Btwn. W. Gusset PL & Fill PL
3. 1/8" pit. x 5" on E. C around Gusset PL
4. 3/8" IR Btwn. E. Gusset & Bot. Chord
5. 3/16" IR Btwn S. Batten PL & Vert Mem

TRUSS ELEVATION

DEPARTMENT OF THE ARMY
NEW ENGLAND DISTRICT CORPS OF ENGINEERS

BOURNE HIGHWAY BRIDGE
ROUTINE INSPECTION

NOTES BY: LICHTENSTEIN CONSULTING ENGINEERS

JOB #1986	DATE: 7/22/98
CREW: W², SD	SHEET 1 OF 12

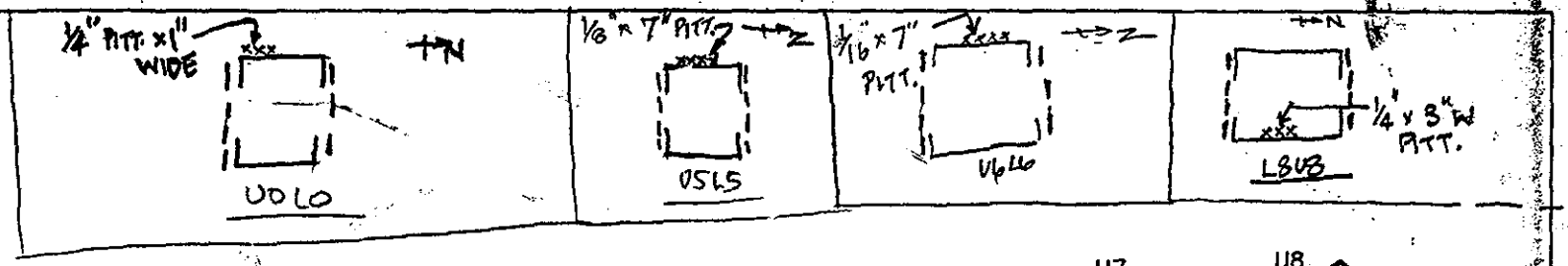

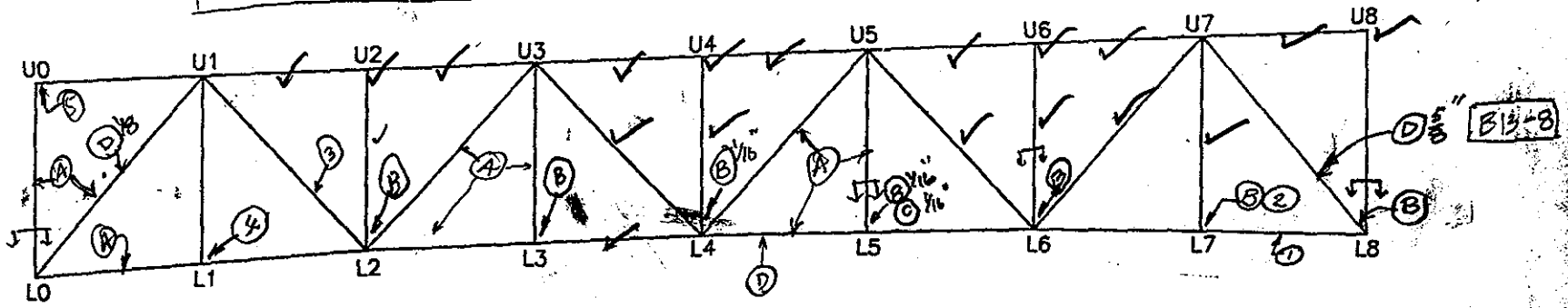

L22 2

SPAN 7

E TRUSS E ELEVATION

NOTES:
1. W. CHANNEL W. FACE 1/16" PITT. x 12" H
2. 1/4" (R) BET. NE EDGE OF E GUSSET PL & FILL PLS
3. 15/16" ϕ DRILLED HOLE (MISDRILLED AWAY FROM LACING CONN.) IN BOT. PL OF W E.
4. UPTO 1/8" PITT. x 25% AREA OF W GUSSET PL W. FACE
5. HR ON S. SIDE OF JT.

TRUSS ELEVATION

DEPARTMENT OF THE ARMY
NEW ENGLAND DISTRICT CORPS OF ENGINEERS

BOURNE HIGHWAY BRIDGE
ROUTINE INSPECTION

NOTES BY: LICHTENSTEIN CONSULTING ENGINEERS

JOB #1986 | DATE: 7/24/98

CREW: CP, RW | SHEET 11 OF 41

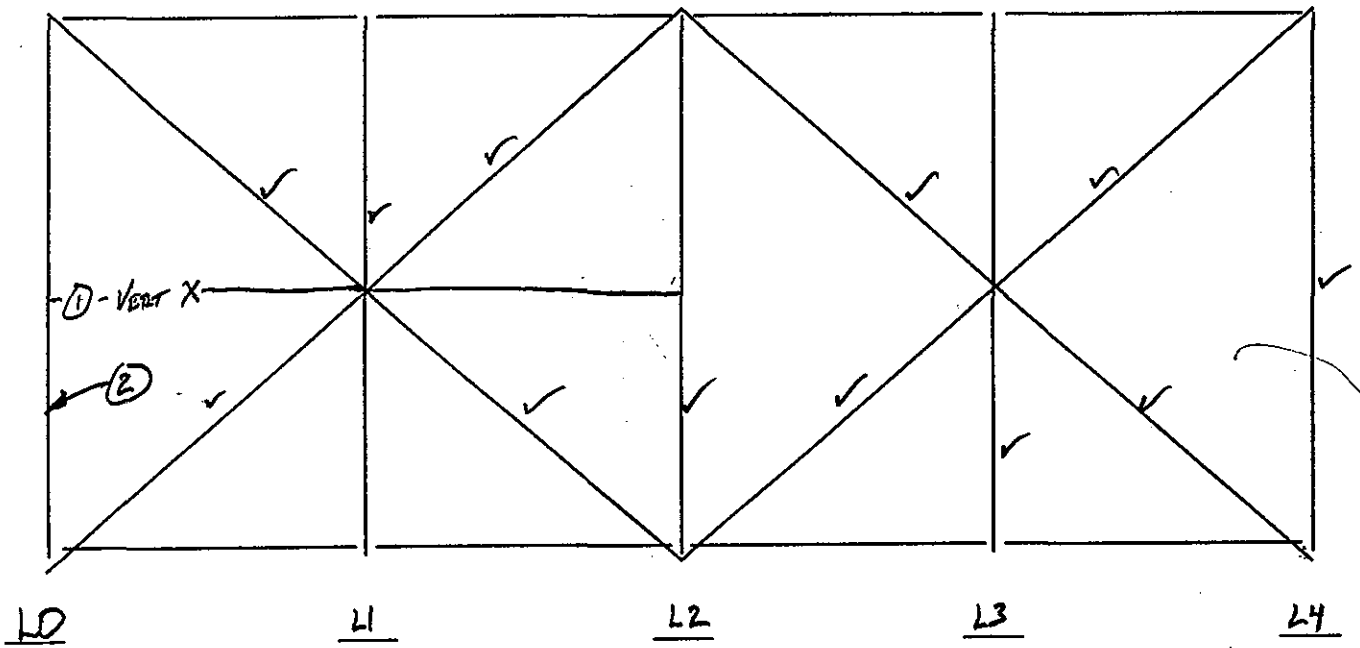

SPAN 7

NOTES:

① VERT X BRACE HAS 1/4" LOSS F/H "T" B13-11 B18-15 *

② AREAS OF 1/8" PITTING 3" Φ ON TOP OF FF X

* FP, EL 8/19/98

LOWER CHORD BRACING

DEPARTMENT OF THE ARMY
NEW ENGLAND DISTRICT CORPS OF ENGINEERS

BOURNE HIGHWAY BRIDGE
ROUTINE INSPECTION

NOTES BY: LICHTENSTEIN CONSULTING ENGINEERS

JOB #1986	DATE: 7/22/98
CREW: W², SD	SHEET 3 OF 12

227 3

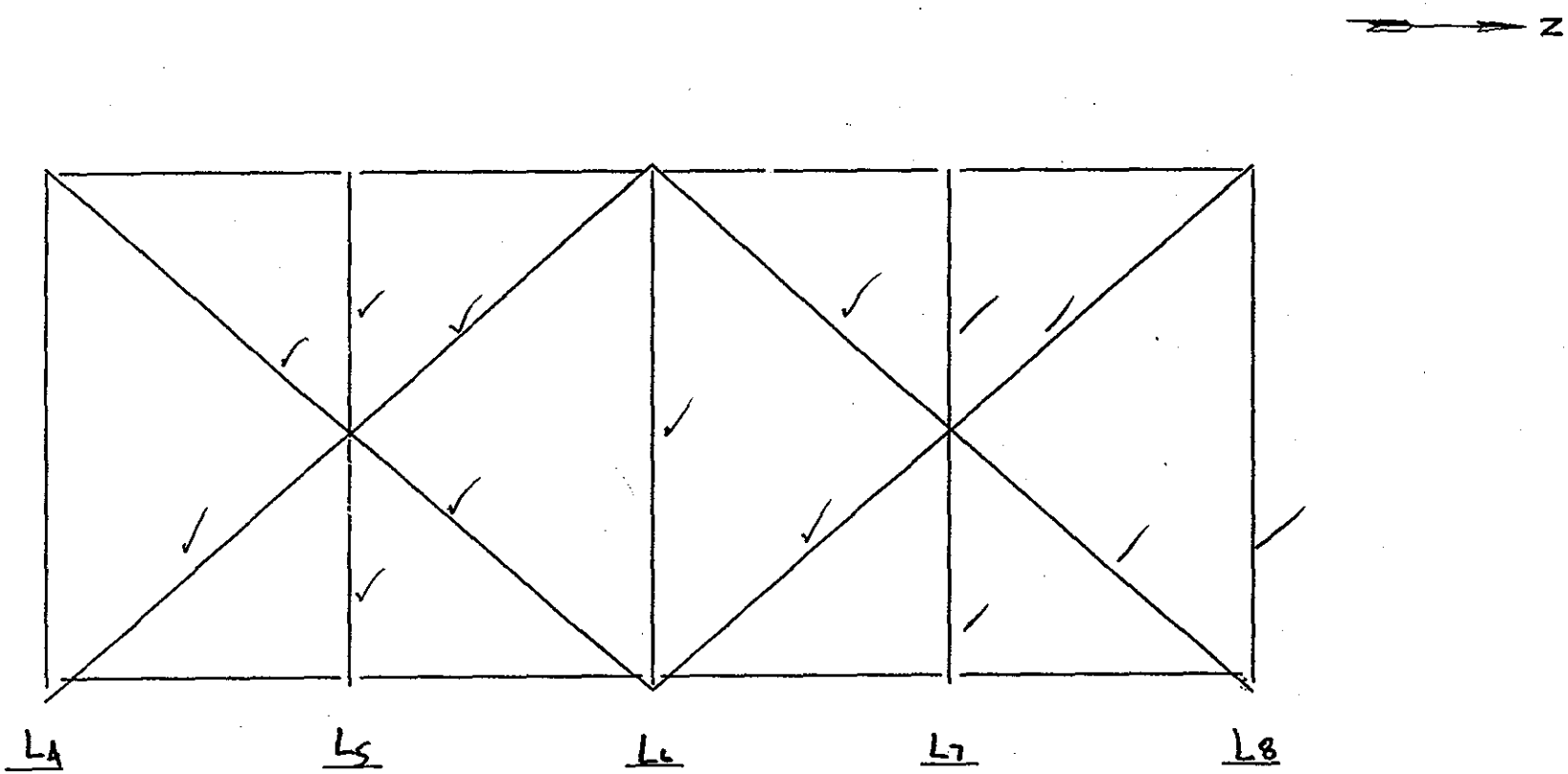

SPAN 7

NOTES: Typ. Cond. - Isolated 1/8" pitting x 2"ø on horizontal Surfaces

LOWER CHORD BRACING

DEPARTMENT OF THE ARMY
NEW ENGLAND DISTRICT CORPS OF ENGINEERS

BOURNE HIGHWAY BRIDGE
ROUTINE INSPECTION

NOTES BY: LICHTENSTEIN
CONSULTING ENGINEERS

JOB #1986 | DATE: 7/22/98

CREW: WJ, SD | SHEET 2 OF 12

4
227

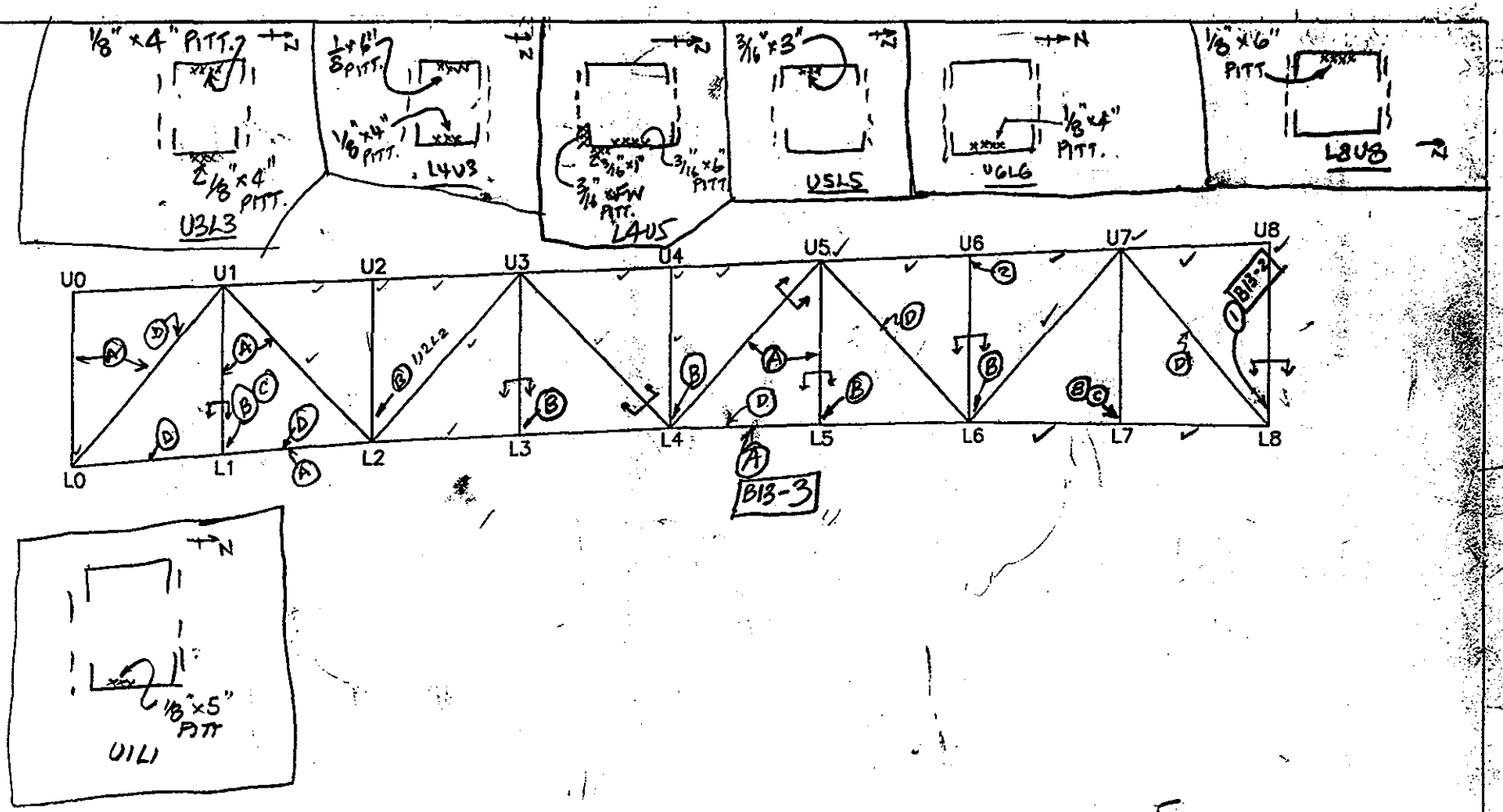

SPAN 5

W TRUSS E ELEVATION

NOTES: (A) DRAIN SUPPORT BRACKET WELDED TO TRUSS MEMBER
(B) UP TO 1/8" PITTING UP TO 1/2" W, INSIDE FACE GUSSET PL ALONG TRUSS L
(C) UP TO 1/8" PITTING ON GUSSET PL ALONG BRACING CONN.
(D) UP TO 1/4" (IR) BTWN L & CONN PL OF L'S & WEB PL
(1) 3"ϕ HOLE IN S. BOT. BATTEN PL
(2) 3/8" (IR) BET GUSSET PL & N. CORNER OF W.L

TRUSS ELEVATION

DEPARTMENT OF THE ARMY
NEW ENGLAND DISTRICT CORPS OF ENGINEERS

BOURNE HIGHWAY BRIDGE
ROUTINE INSPECTION

NOTES BY: LICHTENSTEIN
CONSULTING ENGINEERS

JOB #1986	DATE: 7/21/98
CREW: BW FP	SHEET 1 OF 5

227 5

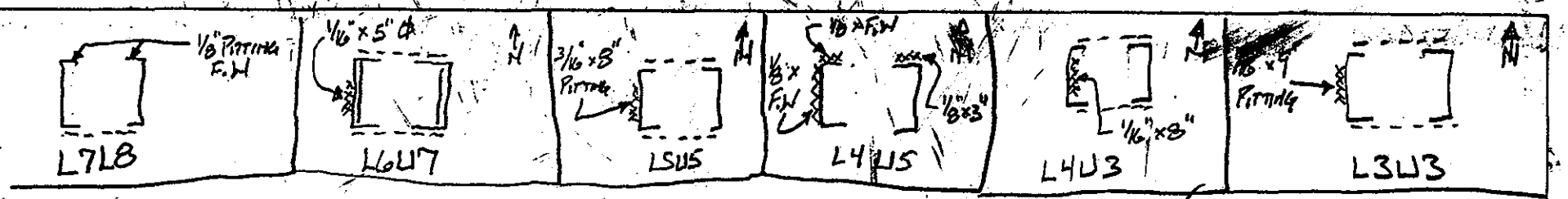

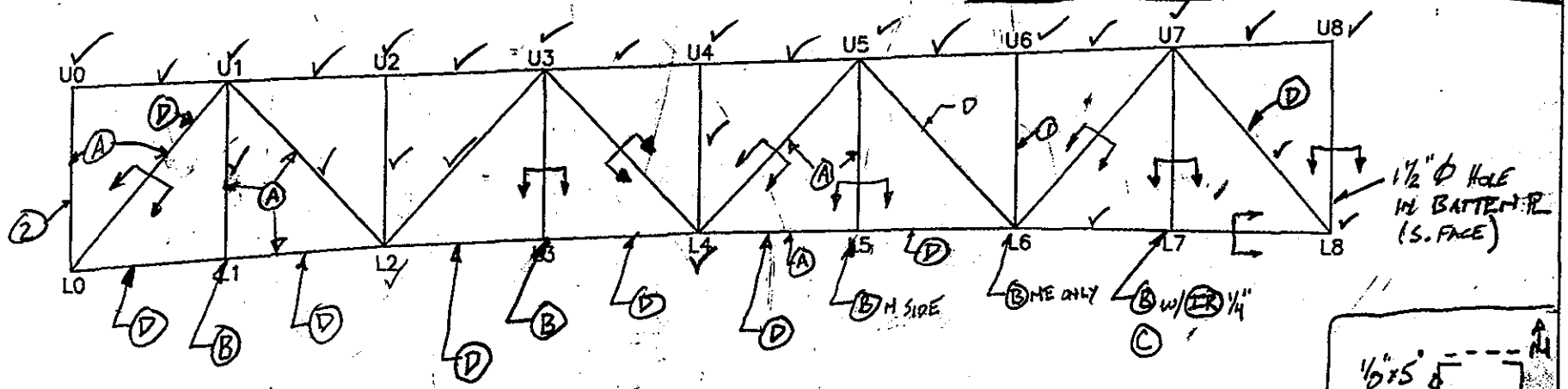

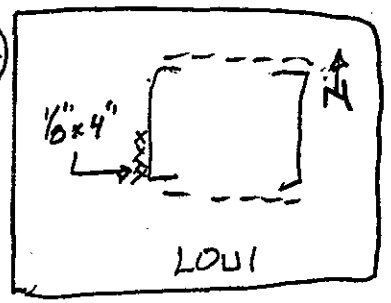

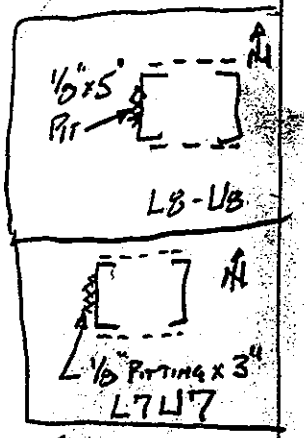

SPAN 5

E TRUSS E ELEVATION

NOTES:

Ⓐ Welded Drain Support Bracket to Truss Member Web

Ⓑ Up to 1/8" Pitting, 1/2" Wide, Along Truss Members on Interior Face of Guss

Ⓒ Up to 1/8" Pitting 1/2" High on Gusset PL Along Top of Bracing Conn. ∠'s

Ⓓ (IR) Btwn Web PL of Truss Members

① 1/8" Pit x 2" ϕ on W. E Exterior

② 1/8" x 2" ϕ Pitting on W E Exterior

TRUSS ELEVATION	
DEPARTMENT OF THE ARMY NEW ENGLAND DISTRICT CORPS OF ENGINEERS	
BOURNE HIGHWAY BRIDGE ROUTINE INSPECTION	
NOTES BY: LICHTENSTEIN CONSULTING ENGINEERS	W°
JOB #1986	DATE: 7/21/98
CREW: SD, WW	SHEET 1 OF 10

6 227

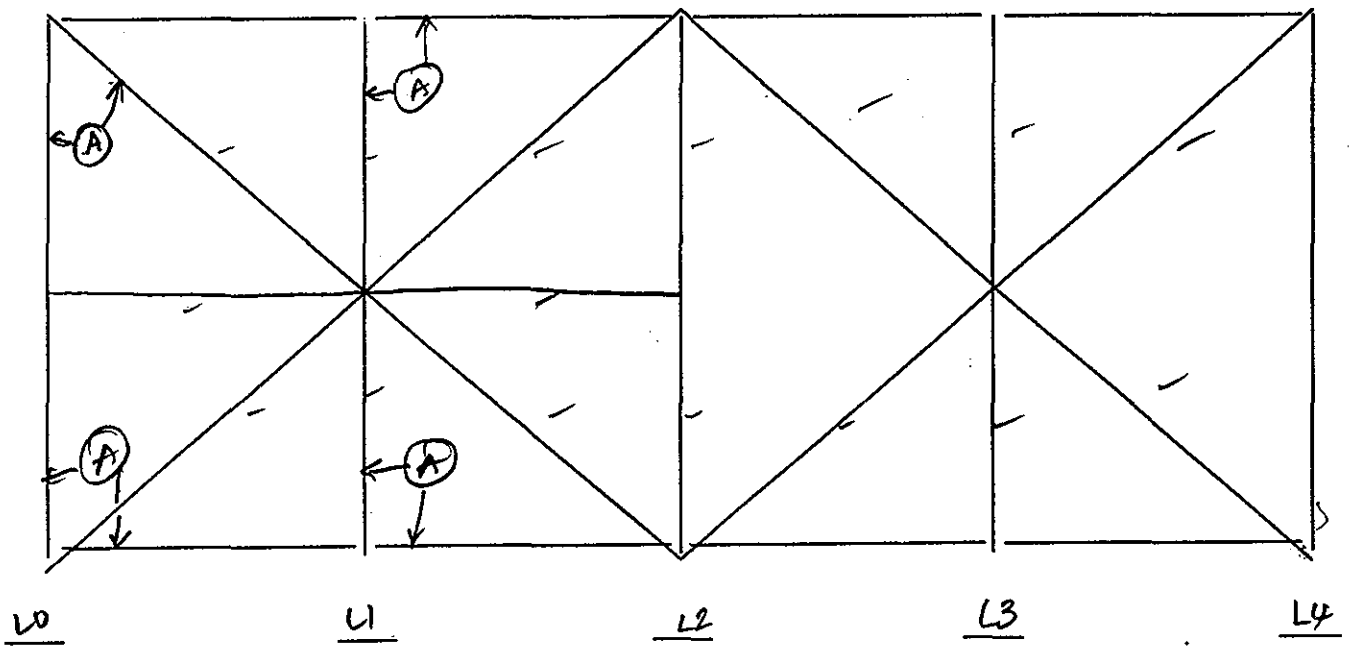

TYP. NOTES ① BRACING MEMBERS HAVE UPTO 1/8" PITT. × 1"-2" ϕ AT ISOLATED LOCATIONS

② LOWER GUSSET PLS FOR X BRACING FLAME CUT AT ALL X BRACING CONN.

SPAN 5

NOTES:

LOWER CHORD BRACING

DEPARTMENT OF THE ARMY
NEW ENGLAND DISTRICT CORPS OF ENGINEERS

BOURNE HIGHWAY BRIDGE
ROUTINE INSPECTION

NOTES BY: LICHTENSTEIN
CONSULTING ENGINEERS

JOB #1986	DATE: 7/21/98
CREW: PP, PWW	SHEET 2 OF 5

(227)

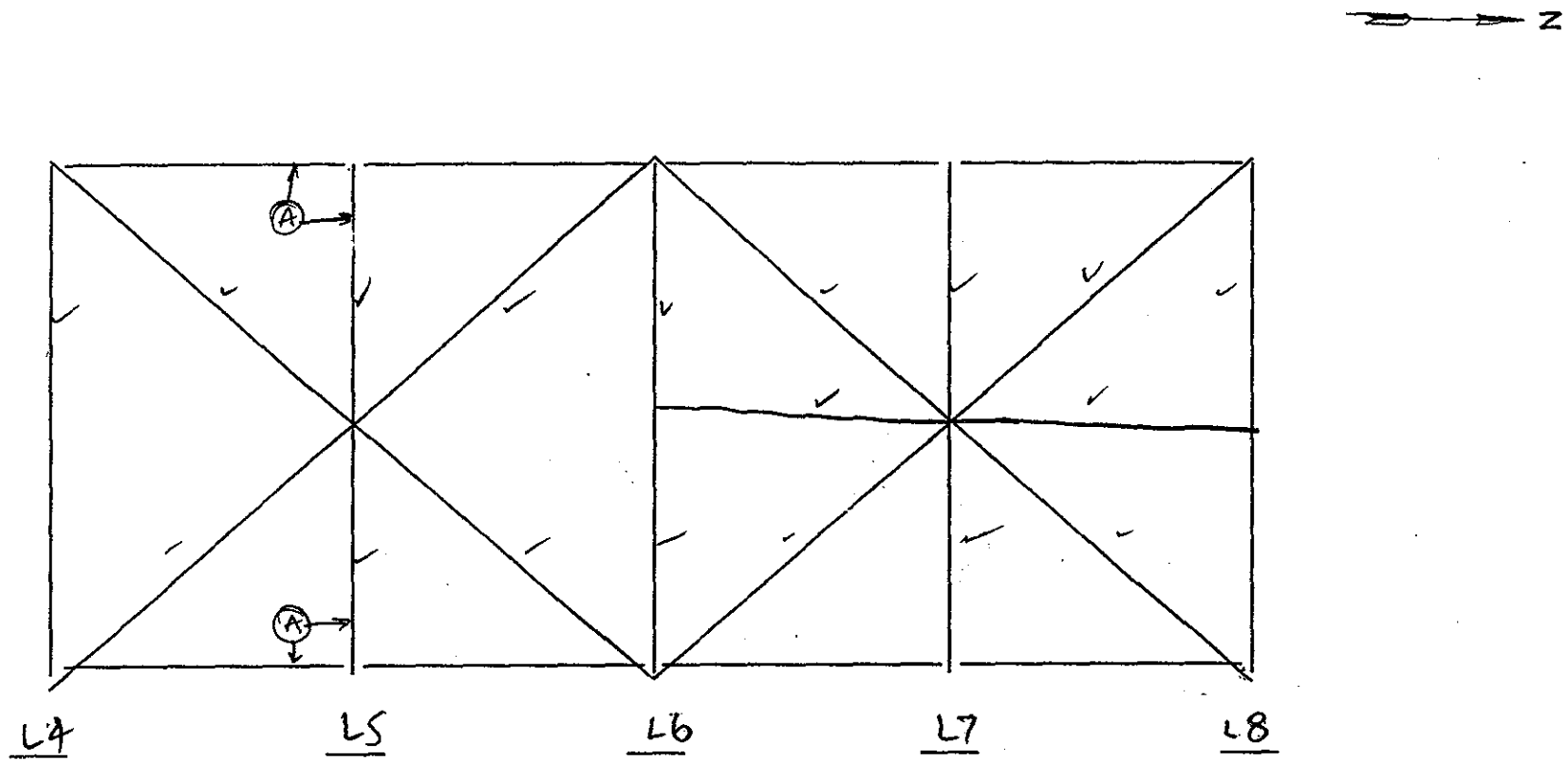

TYP. CONDITION: ① BRACING MEMBERS HAVE UPTO 1/8" PITT. 1"-2" ϕ ISOLATED LOCATION

② LOWER GUSSET PLs FOR X BRACING ARE FLAME CUT AT ALL X-BRACING CONN.

SPAN 5

NOTES:

LOWER CHORD BRACING

DEPARTMENT OF THE ARMY
NEW ENGLAND DISTRICT CORPS OF ENGINEERS

BOURNE HIGHWAY BRIDGE
ROUTINE INSPECTION

NOTES BY: LICHTENSTEIN
CONSULTING ENGINEERS

JOB #1986 | DATE: 7/21/98

CREW: FP PWN | SHEET 3 OF 5

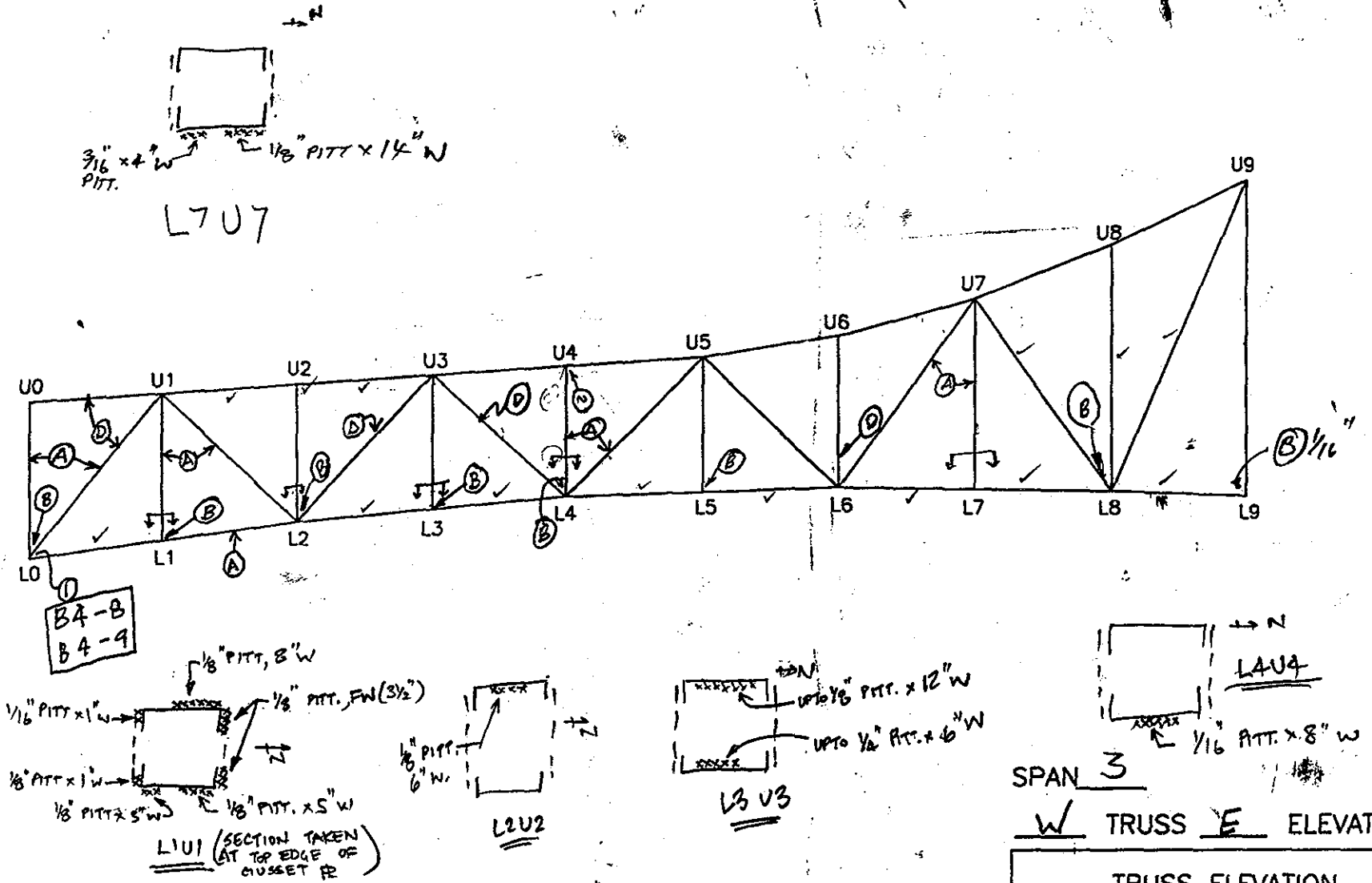

SPAN 3

W TRUSS E ELEVATION

NOTES: (A) DRAIN SUPPORT BRACKET WELDED TO TRUSS MEMBER

(B) UP TO 1/8" PITTING, 1/2" W, INSIDE FACE OF GUSSET PL ALONG TRUSS

(C) UP TO 1/8" PITTING, 1/2" H ON GUSSET PL ALONG TOP OF BRACING CONN ∠

(D) UP TO 1/4" (IR) BTWN TRUSS MEMBER [ ] COV. PL

(1) HR ON STIFF ∠S & CONN ∠S OF CROSS GIRDER TO TRUSS

(2) (IR) 1/4" BET [& GUSSET PL, S.W. CORNER OF JT.

TRUSS ELEVATION	
DEPARTMENT OF THE ARMY NEW ENGLAND DISTRICT CORPS OF ENGINEERS	
BOURNE HIGHWAY BRIDGE ROUTINE INSPECTION	
NOTES BY: LICHTENSTEIN CONSULTING ENGINEERS	
JOB #1986	DATE: 7/14/98
CREW: FP, PNN	SHEET 1 OF 3

227

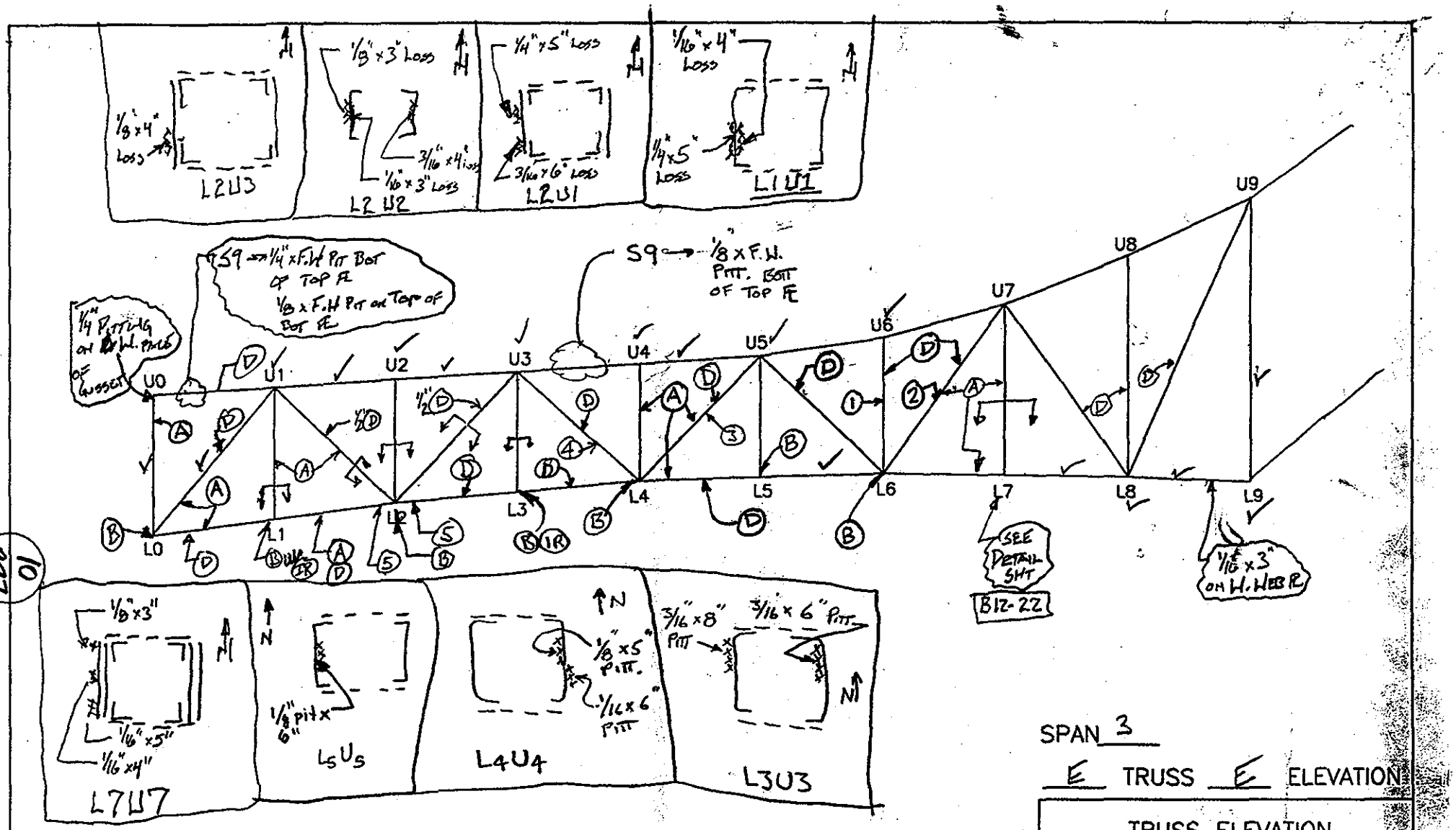

L22 10

SPAN 3

E TRUSS E ELEVATION

NOTES:
1. 1/8" pit. x 8" on W. Web PL
2. 1/8" pit x 3" Ø on W. Web PL
3. 3/16" x 3" Ø Pitt on outside face of west web of [
4. 1/8" x 10" Pitt outside of W. Web
5. 3/16 x 4" Ø on W. Ext. Web PL

TRUSS ELEVATION	
DEPARTMENT OF THE ARMY NEW ENGLAND DISTRICT CORPS OF ENGINEERS	
BOURNE HIGHWAY BRIDGE ROUTINE INSPECTION	
NOTES BY: LICHTENSTEIN CONSULTING ENGINEERS	
JOB #1986	DATE: 7/23/78
CREW: W², PWH, SD	SHEET 8 OF 11

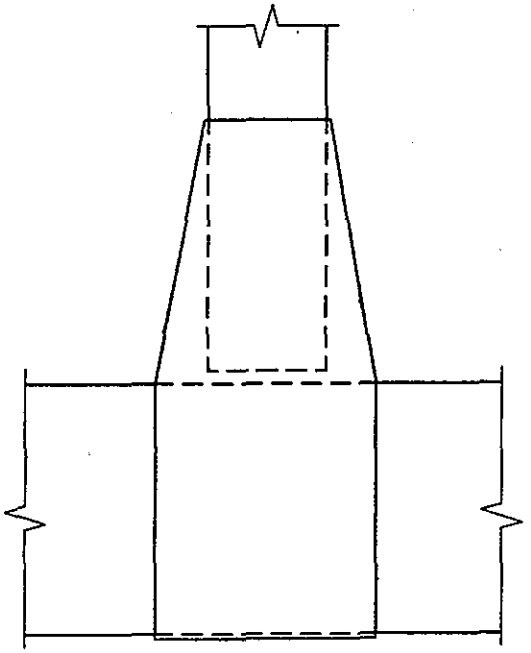

E ELEV.

PANEL POINT L7

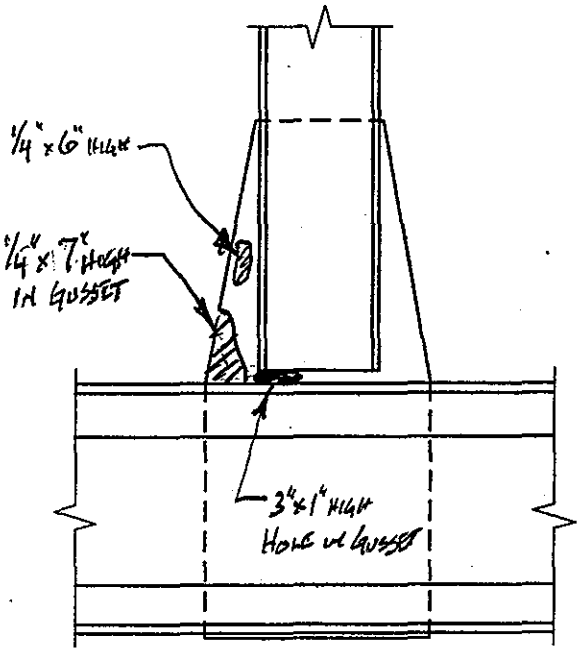

W ELEV. INBOARD FACE

PANEL POINT L7

(227/11)

SPAN 3 E TRUSS

NOTES:

TRUSS JOINT

DEPARTMENT OF THE ARMY
NEW ENGLAND DISTRICT CORPS OF ENGINEERS

BOURNE HIGHWAY BRIDGE
ROUTINE INSPECTION

NOTES BY: LICHTENSTEIN CONSULTING ENGINEERS

JOB #1986 DATE: 7/23/98

CREW: W, PWNSD SHEET 7 OF 11

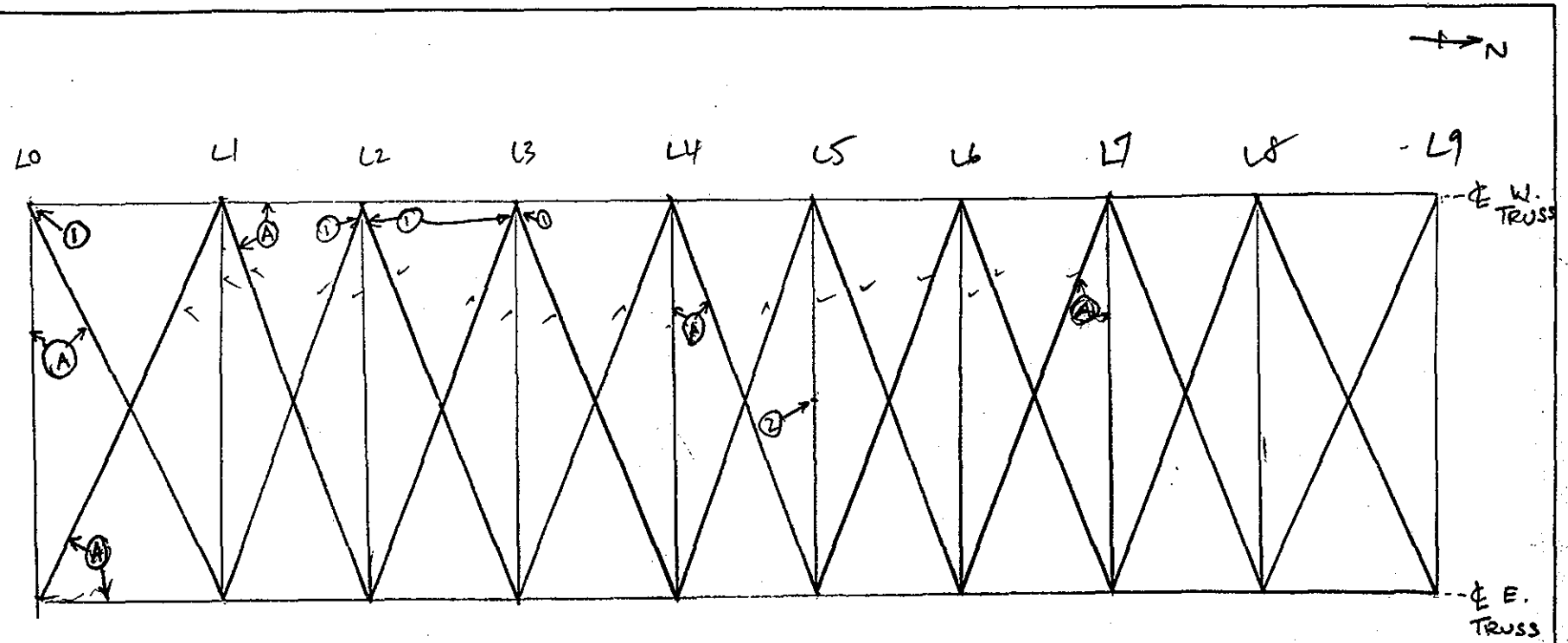

TYP. NOTE: 1/8" PITT. 1"-2"ϕ ON TOPS OF BRACING FLANGE ∡s, SCATTERED LOCATIONS.

SPAN 3 LOWER CHORD BRACING

EL

NOTES: ① 1/4" (IR) BET. TOP BRACING ∡s & CONN. PL
Ⓐ DRAIN SUPPORT BRACKET WELDED TO TRUSS MEMBER
② (IR) AT INTERSECTION OF VERTICAL X BRACING (B4-10)

DEPARTMENT OF THE ARMY
NEW ENGLAND DISTRICT CORPS OF ENGINEERS
BOURNE HIGHWAY BRIDGE
ROUTINE INSPECTION
NOTES BY: LICHTENSTEIN
CONSULTING ENGINEERS
JOB #1986 | DATE: 7/14/98
CREW: FP, PWN | SHEET 2 OF 3

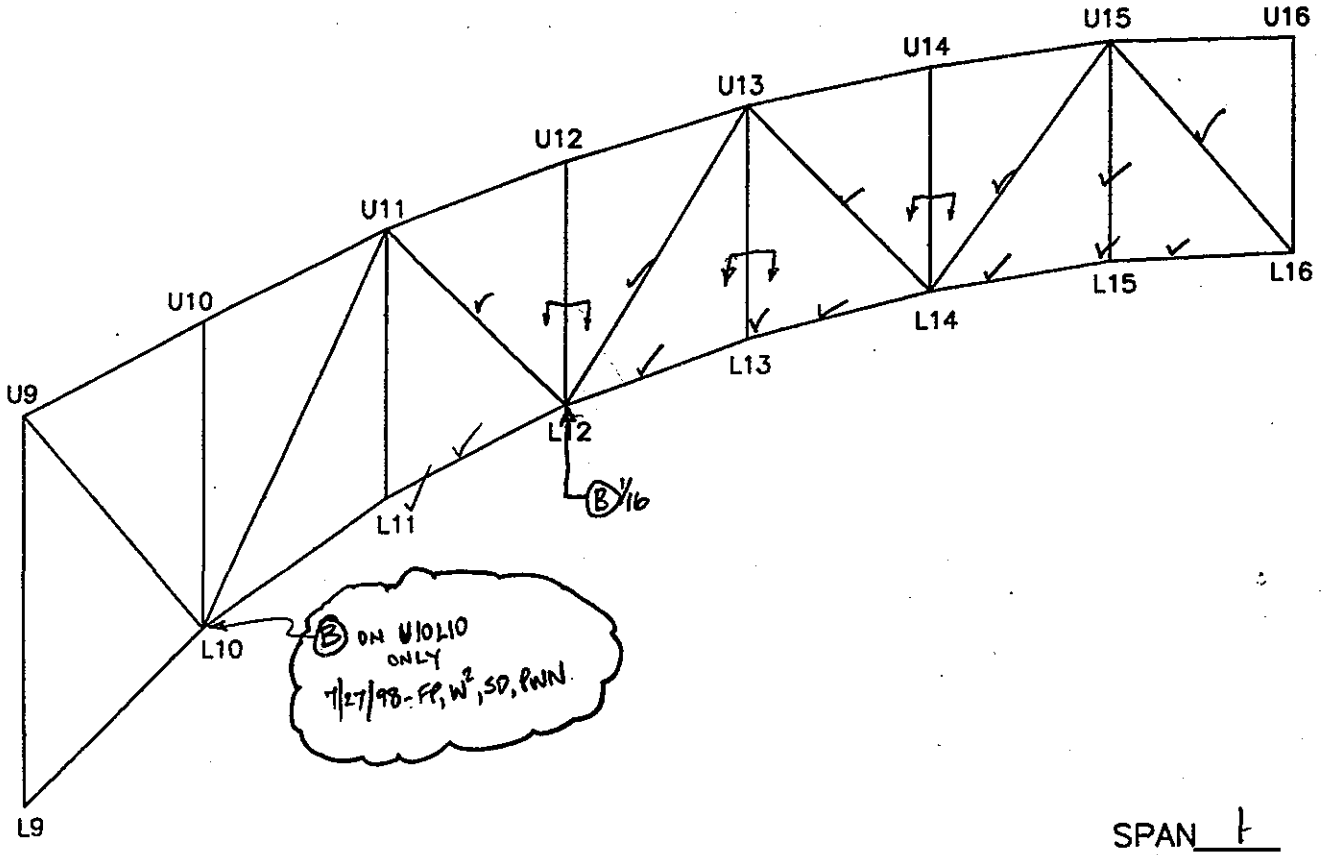

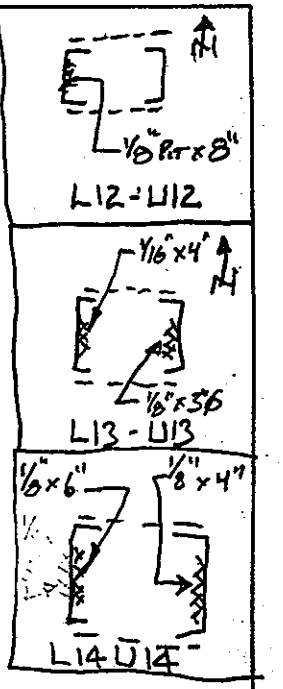

SPAN 1

N TRUSS E ELEVATION

W²

NOTES:

TRUSS ELEVATION

DEPARTMENT OF THE ARMY
NEW ENGLAND DISTRICT CORPS OF ENGINEERS

BOURNE HIGHWAY BRIDGE
ROUTINE INSPECTION

NOTES BY: LICHTENSTEIN
CONSULTING ENGINEERS

JOB #1986	DATE: 7/20/98
CREW: PWN FP WW SD	SHEET 1 OF 4

13 227

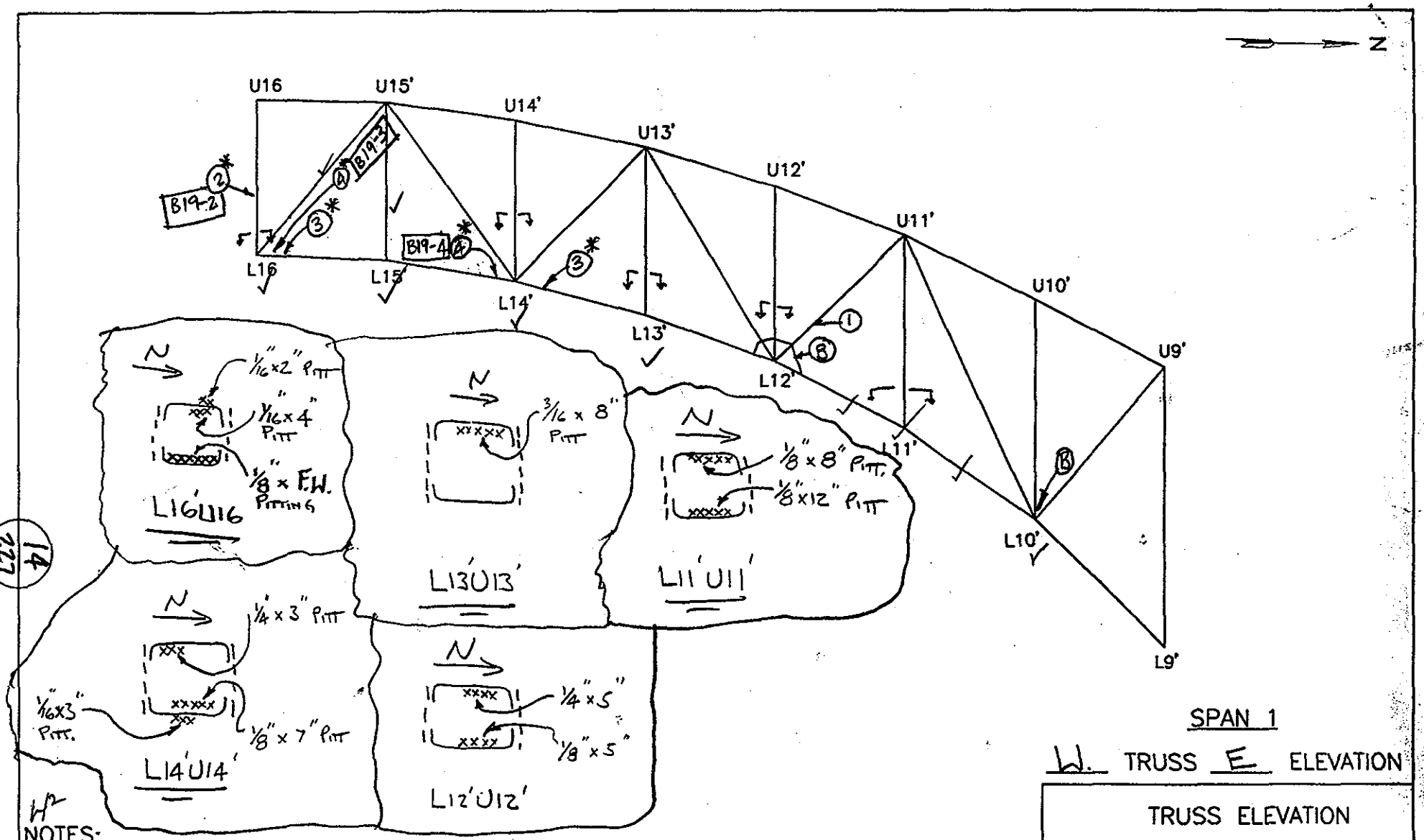

SPAN 1

W. TRUSS E ELEVATION

NOTES:

1. 3/4" ø DRILLED HOLE @ MIDHEIGHT OF WEST WEB PL (INSIDE PL)
2. * BROKEN WELD IN ACCESS LADDER CAGE, 3RD SUPPORT BRACKET FROM BOTTOM.
3. * CATWALK SUPPORT BRACKET WELDED TO TOP PL OF LOWER CHORD
4. * CATWALK GRATING BARS HAVE 100% LOSS ON SEVERAL BARS OVER A 5' LENGTH AND HAVE SAME CONDITION IN RANDOM AREAS AT OTHER LOCATIONS ON CATWALK

* FP, EL 8/19/98

TRUSS ELEVATION

DEPARTMENT OF THE ARMY
NEW ENGLAND DISTRICT CORPS OF ENGINEERS

BOURNE HIGHWAY BRIDGE
ROUTINE INSPECTION

NOTES BY: LICHTENSTEIN
CONSULTING ENGINEERS

JOB #1986	DATE: 7/20/98
CREW: PWN SD WW FP	SHEET 3 OF 4

L22 14

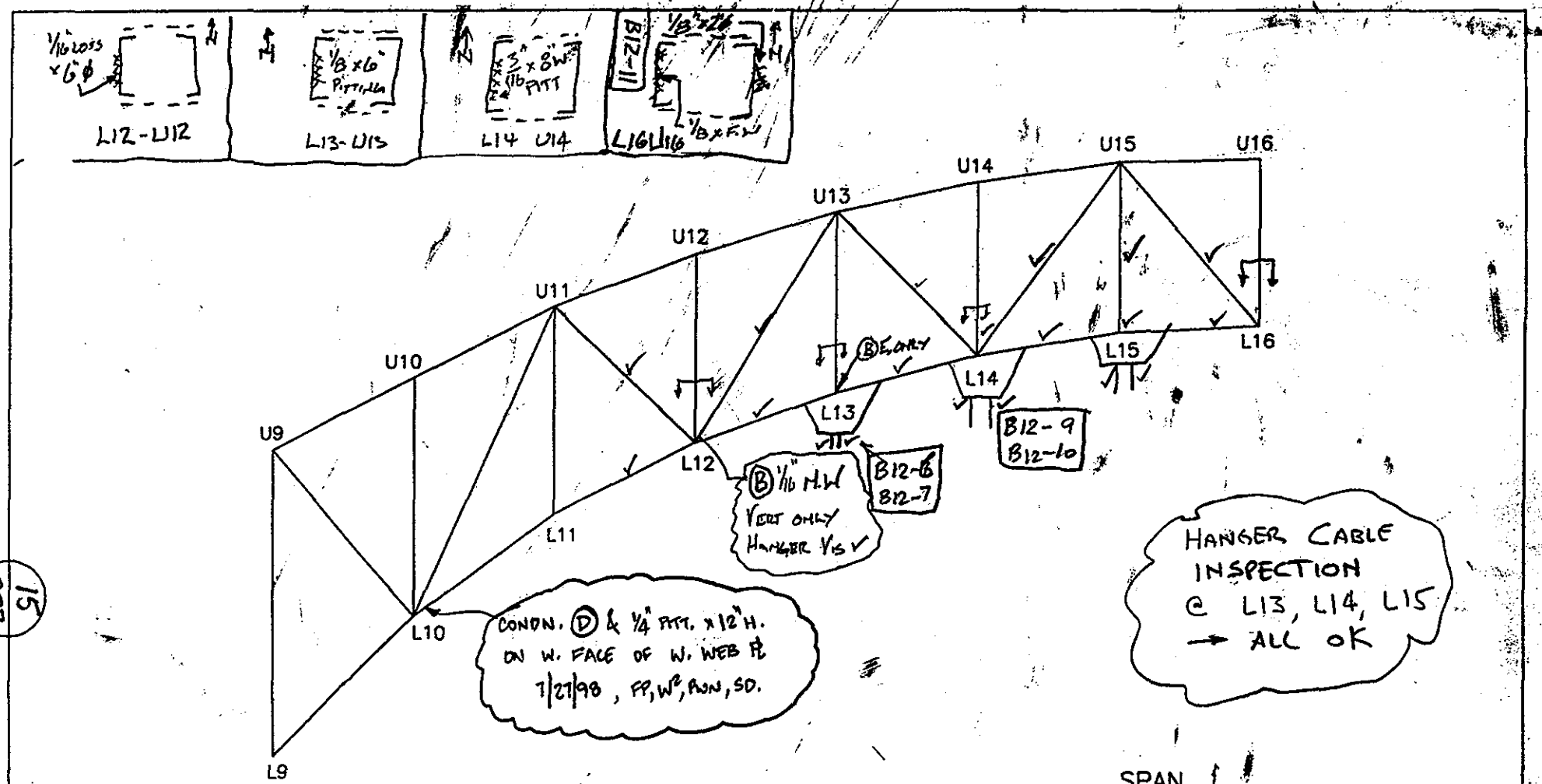

SPAN 1

E TRUSS E ELEVATION

W²

NOTES:

TYP LATERAL BRACING: 1" ϕ SPOTS OF MED RUST w/ ISOLATED 1/8" ϕ PITTING (CLEANED & PAINTED)

TRUSS ELEVATION

DEPARTMENT OF THE ARMY
NEW ENGLAND DISTRICT CORPS OF ENGINEERS

BOURNE HIGHWAY BRIDGE
ROUTINE INSPECTION

NOTES BY: LICHTENSTEIN
CONSULTING ENGINEERS

JOB #1986 | DATE: 7/20/98

CREW: FP, WW | SHEET 2 OF 4

15
227

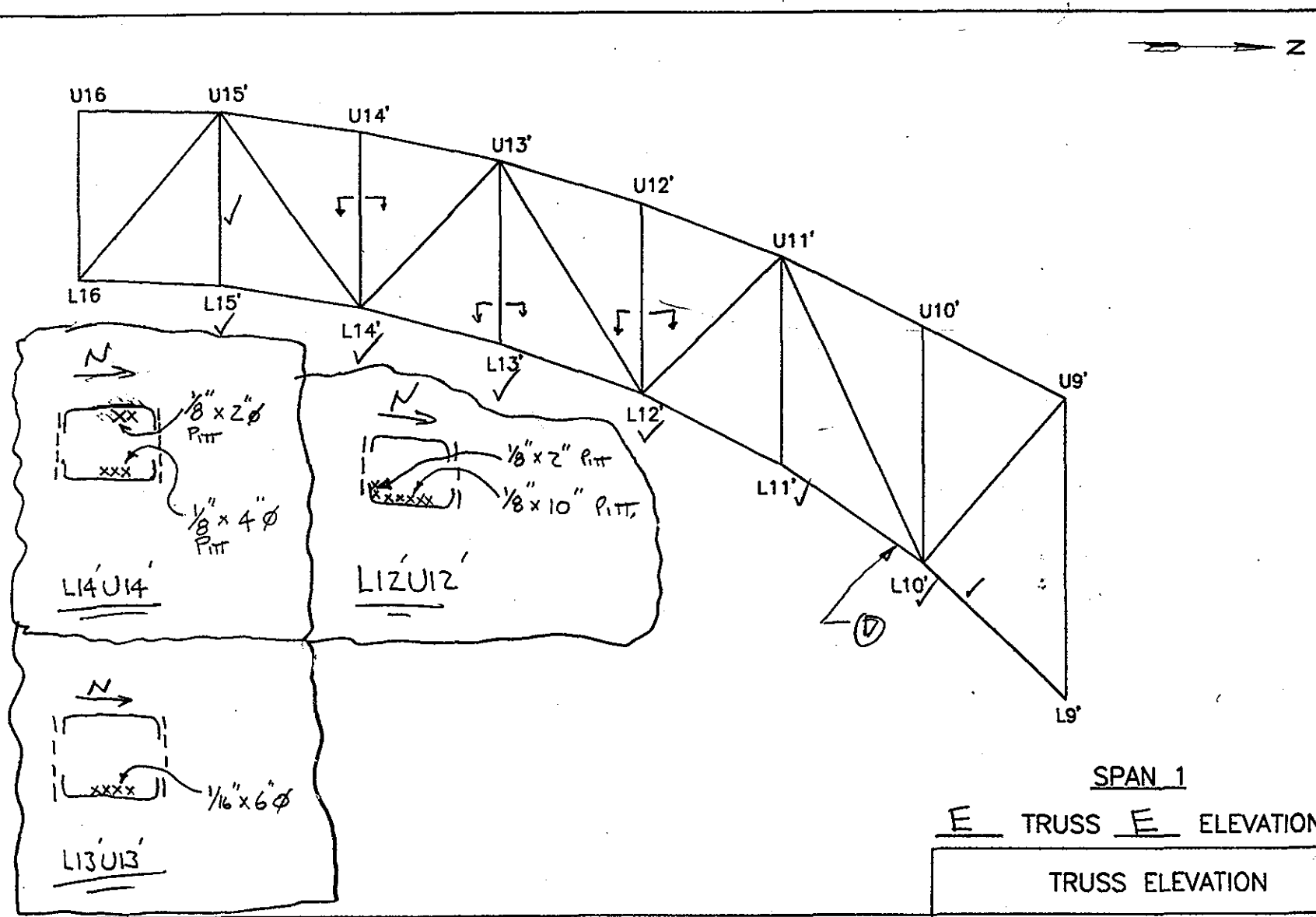

SPAN 1

E TRUSS E ELEVATION

NOTES:

TRUSS ELEVATION	
DEPARTMENT OF THE ARMY NEW ENGLAND DISTRICT CORPS OF ENGINEERS	
BOURNE HIGHWAY BRIDGE ROUTINE INSPECTION	
NOTES BY: LICHTENSTEIN CONSULTING ENGINEERS	
JOB #1986	DATE: 7/20/98
CREW: PWH SD WW FP	SHEET 4 OF 4

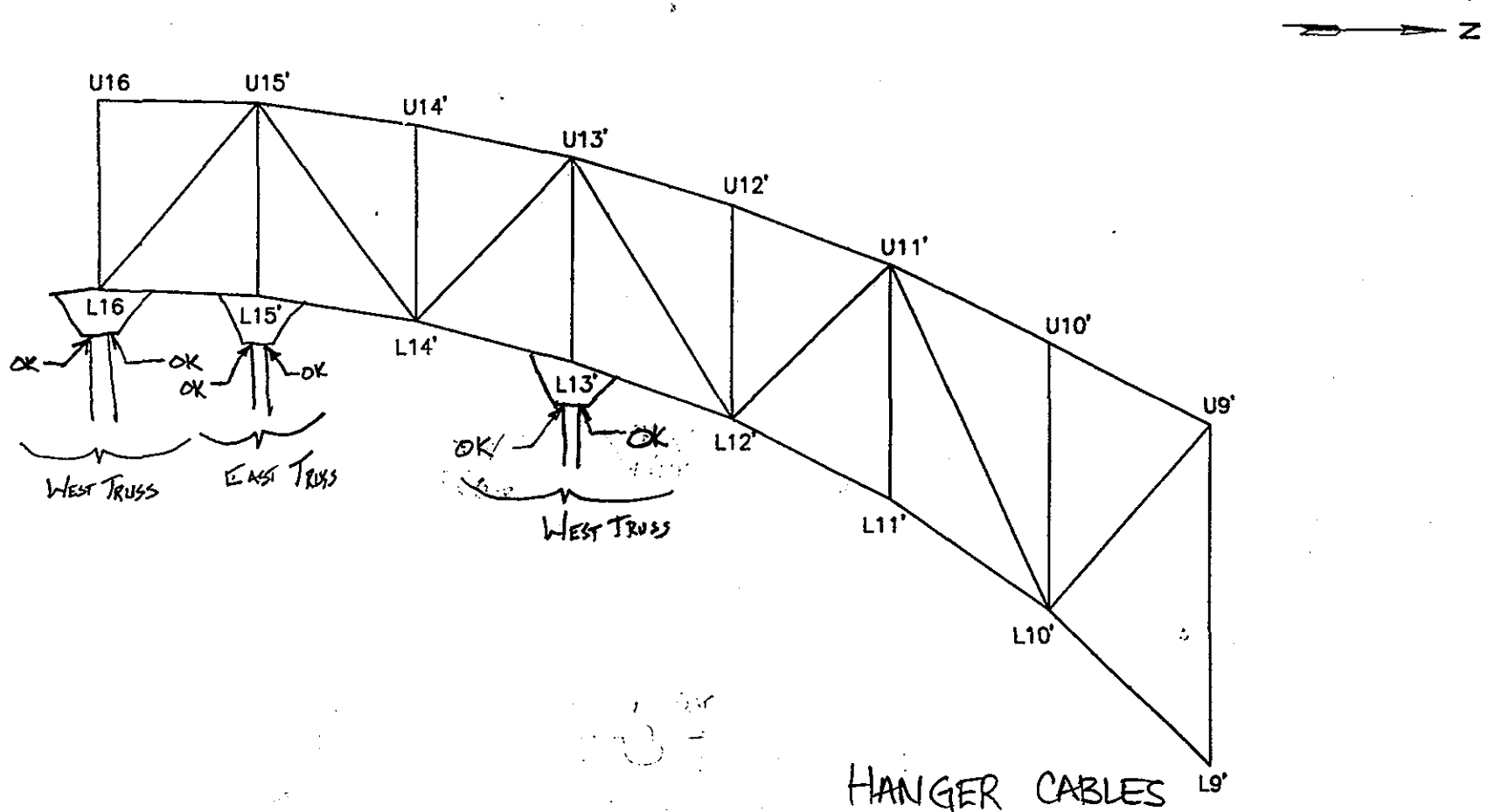

HANGER CABLES INSPECTION

SPAN 1

TRUSS — ELEVATION

EL

NOTES:

TRUSS ELEVATION	
DEPARTMENT OF THE ARMY NEW ENGLAND DISTRICT CORPS OF ENGINEERS	
BOURNE HIGHWAY BRIDGE ROUTINE INSPECTION	
NOTES BY: LICHTENSTEIN CONSULTING ENGINEERS	
JOB #1986	DATE: 7/15/98
CREW: [illegible]	SHEET 1 OF 1

17
227

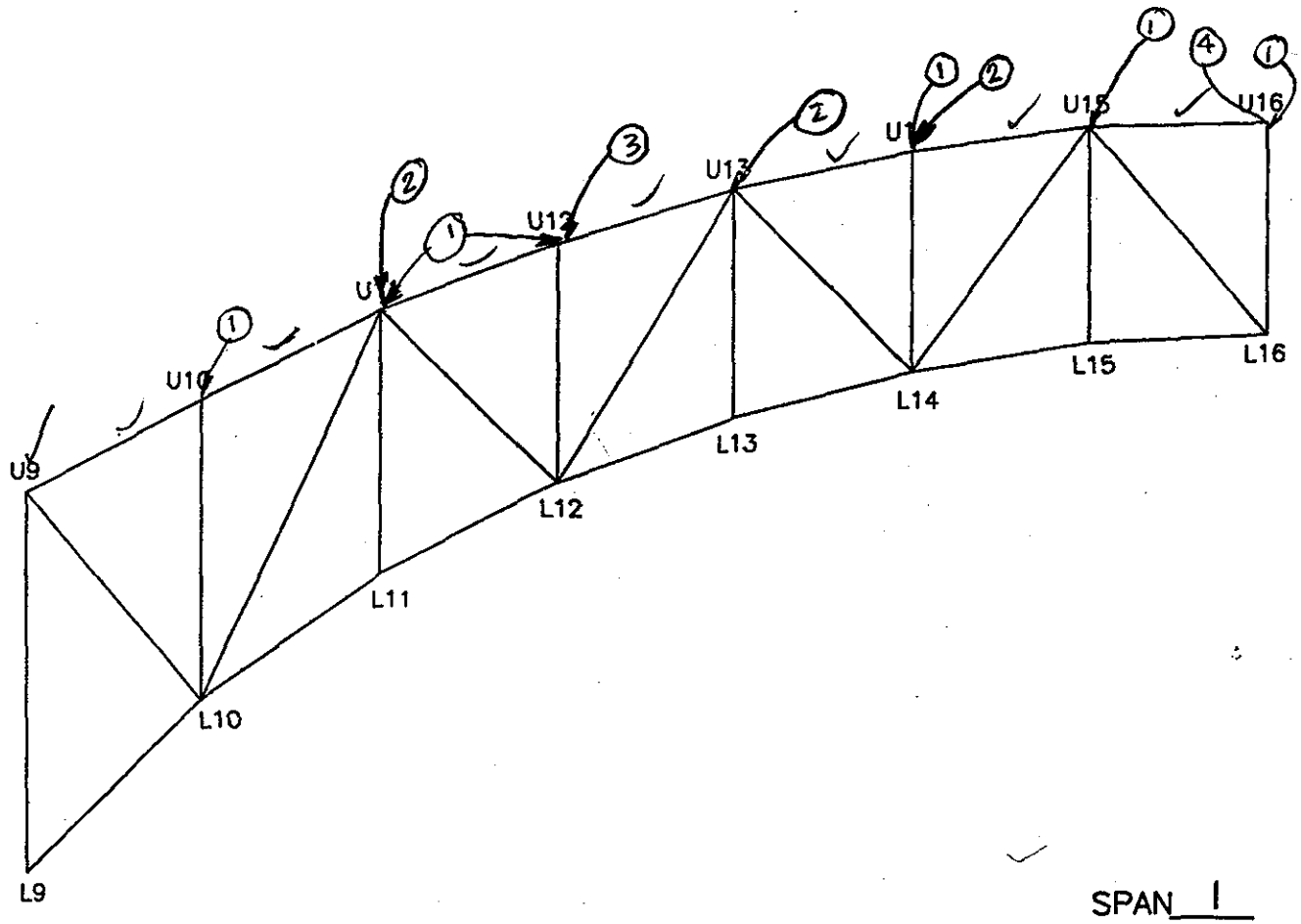

SPAN 1

W TRUSS E ELEVATION

NOTES:
1. PL welded to outside face of E. Guss. PL
2. Isolated patches of 1/16" pit on E. Guss. PL
3. 1/8" x 4" high x 18" wide pit. outside face E. Guss.
4. Aviation Lights are working & O.K.
5. Isolated Areas of Paint Peeling Away from Primer.

TRUSS ELEVATION

DEPARTMENT OF THE ARMY
NEW ENGLAND DISTRICT CORPS OF ENGINEERS

BOURNE HIGHWAY BRIDGE
ROUTINE INSPECTION

NOTES BY: LICHTENSTEIN
CONSULTING ENGINEERS

JOB #1986 | DATE: 7/24/98
CREW: SD, PWN, W² | SHEET 2 OF 8

18
227

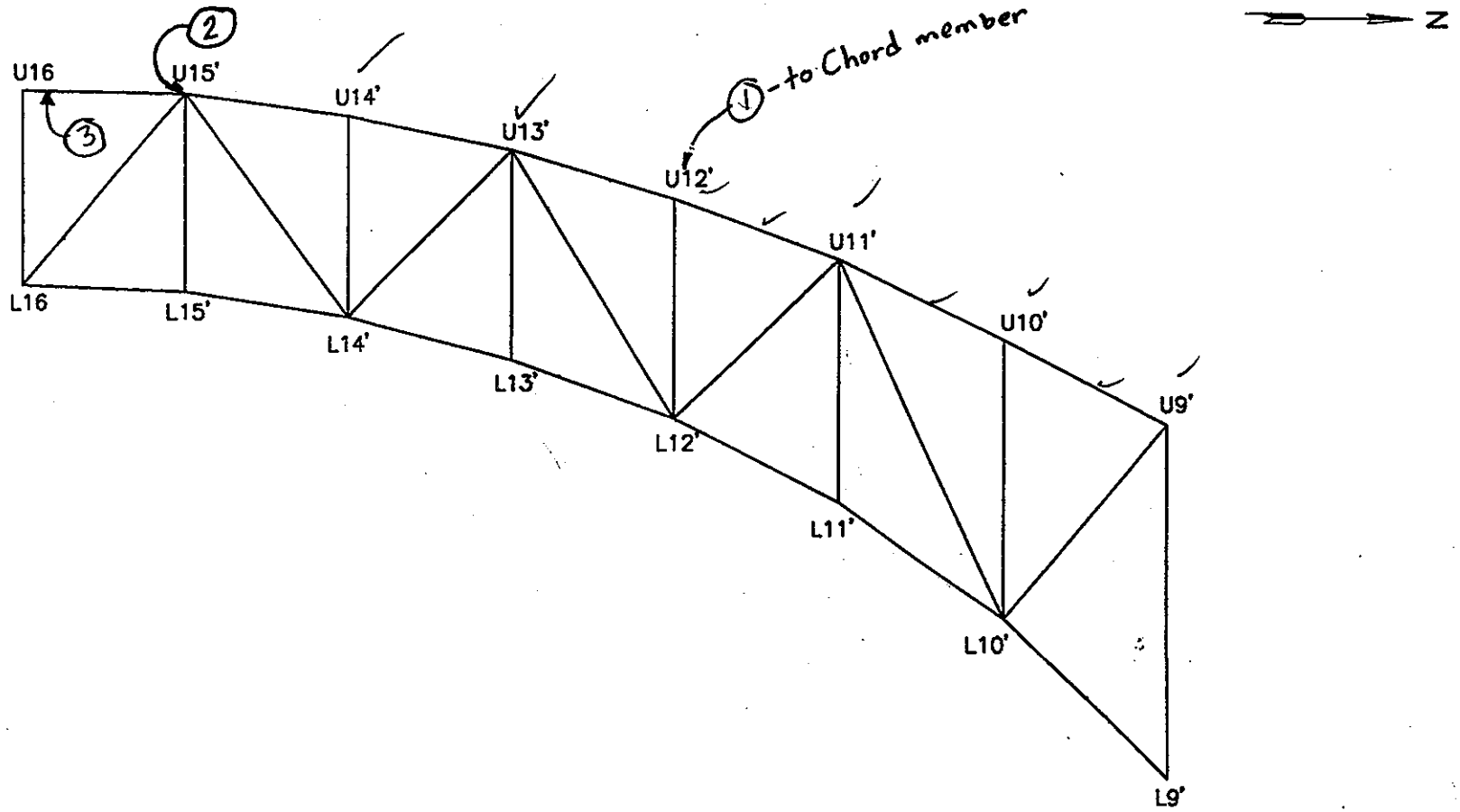

SPAN 1

W TRUSS E ELEVATION

NOTES:
1. PL Welded to E. Gusset Typ. @ All Upper Panel Pts
2. Isolated 1/8" pit. x upto 5" on outer E. Guss PL.
3. 1/8" pit. x 3" ϕ on E. Web of U15' U16
4. Isolated Areas of Paint Peeling Away from Primer

TRUSS ELEVATION	
DEPARTMENT OF THE ARMY NEW ENGLAND DISTRICT CORPS OF ENGINEERS	
BOURNE HIGHWAY BRIDGE ROUTINE INSPECTION	
NOTES BY: LICHTENSTEIN CONSULTING ENGINEERS	
JOB #1986	DATE: 7/24/98
CREW: SD, W², PWN	SHEET 4 OF 8

19 227

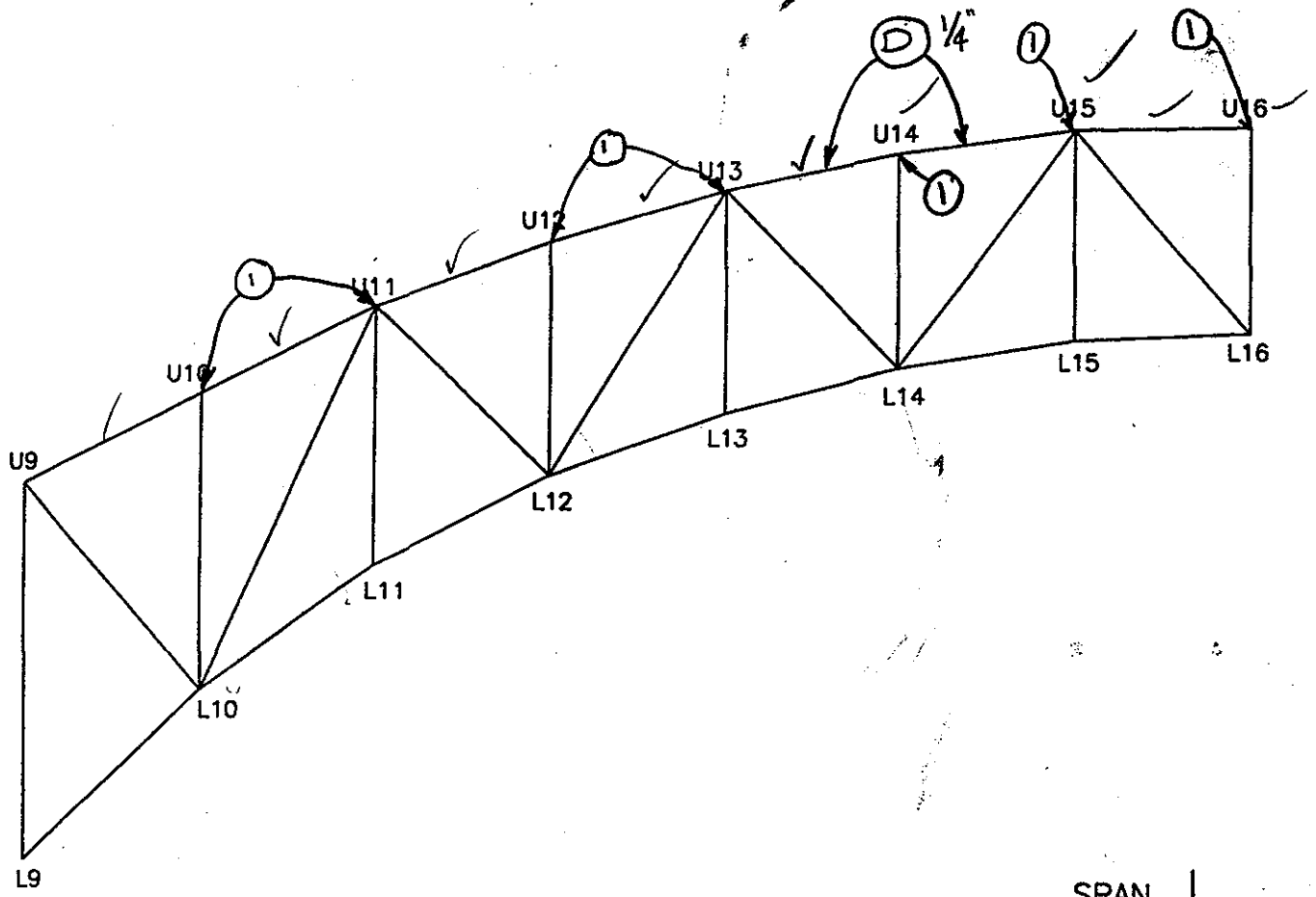

SPAN 1

E TRUSS E ELEVATION

NOTES: ① 1"x1" ∠ welded to W. Gusset. B9-10

② Isolated Areas of Paint Peeling away from primer.

TRUSS ELEVATION

DEPARTMENT OF THE ARMY
NEW ENGLAND DISTRICT CORPS OF ENGINEERS

BOURNE HIGHWAY BRIDGE
ROUTINE INSPECTION

NOTES BY: LICHTENSTEIN CONSULTING ENGINEERS W²

JOB #1986 | DATE: 7/24/98

CREW: SD, PWN, W² | SHEET 1 OF 8

20
227

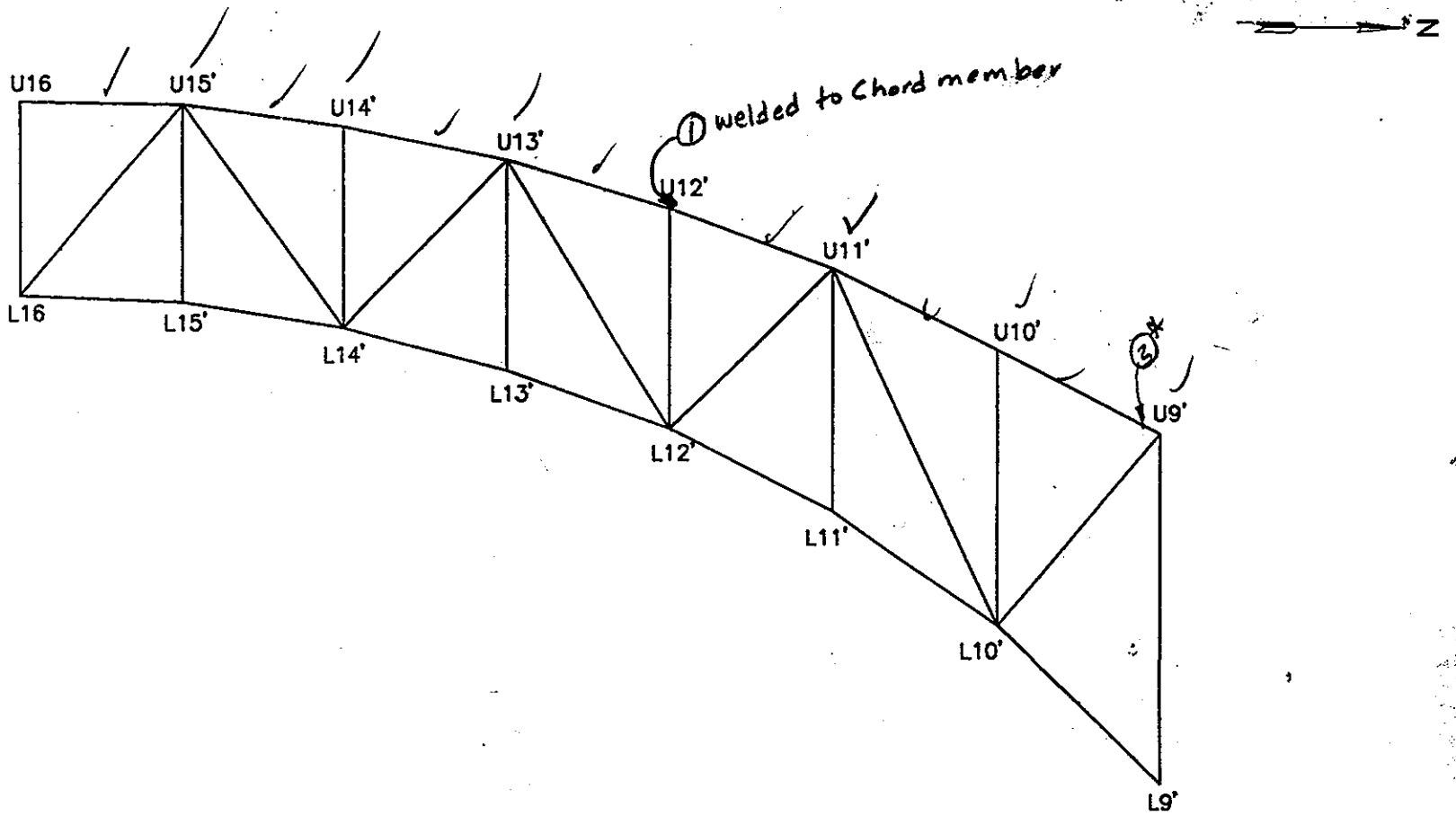

SPAN 1

E TRUSS E ELEVATION

NOTES:
① 1"x1" ∡ Welded to W. Guss. PL (Typ. @ all upper Panel Pts)
② Isolated Areas of Paint Peeling Away from Primer
③* ∡ 1½"x1½" WELDED TO OUTSIDE FACE OF W. GUSSET PL

* FR, EL 8/19/98

TRUSS ELEVATION	
DEPARTMENT OF THE ARMY NEW ENGLAND DISTRICT CORPS OF ENGINEERS	
BOURNE HIGHWAY BRIDGE ROUTINE INSPECTION	
NOTES BY: LICHTENSTEIN CONSULTING ENGINEERS	
JOB #1986	DATE: 7/24/98
CREW: SD, PWN, WP	SHEET 3 OF 8

227/12

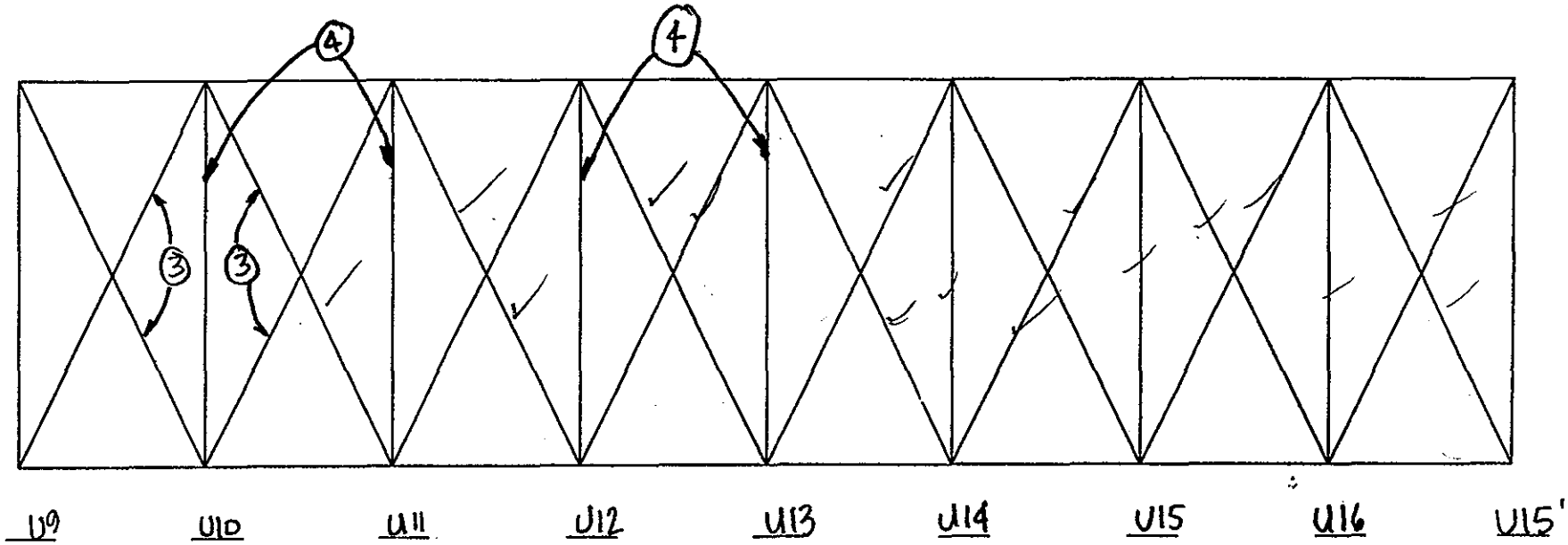

SPAN 1

Top CHORD BRACING

NOTES:
1. Isolated Areas of Paint Peeling Away From Primer.
2. IR upto 1/2" btwn Lat. Brace & Lat. Guss. Pl (Typ.)
3. Tack Welded Cover Pl's on T. & B. of Lat. Bracing.
4. Water pooling on bot. Pl B9-12
5. Isolated Areas of upto 1/8" pit. on Lat. Bracing.

TRUSS BRACING

DEPARTMENT OF THE ARMY
NEW ENGLAND DISTRICT CORPS OF ENGINEERS

BOURNE HIGHWAY BRIDGE
ROUTINE INSPECTION

NOTES BY: LICHTENSTEIN CONSULTING ENGINEERS

JOB #1986 | DATE: 7/24/98

CREW: SD, WZ, PWN | SHEET 5 OF 8

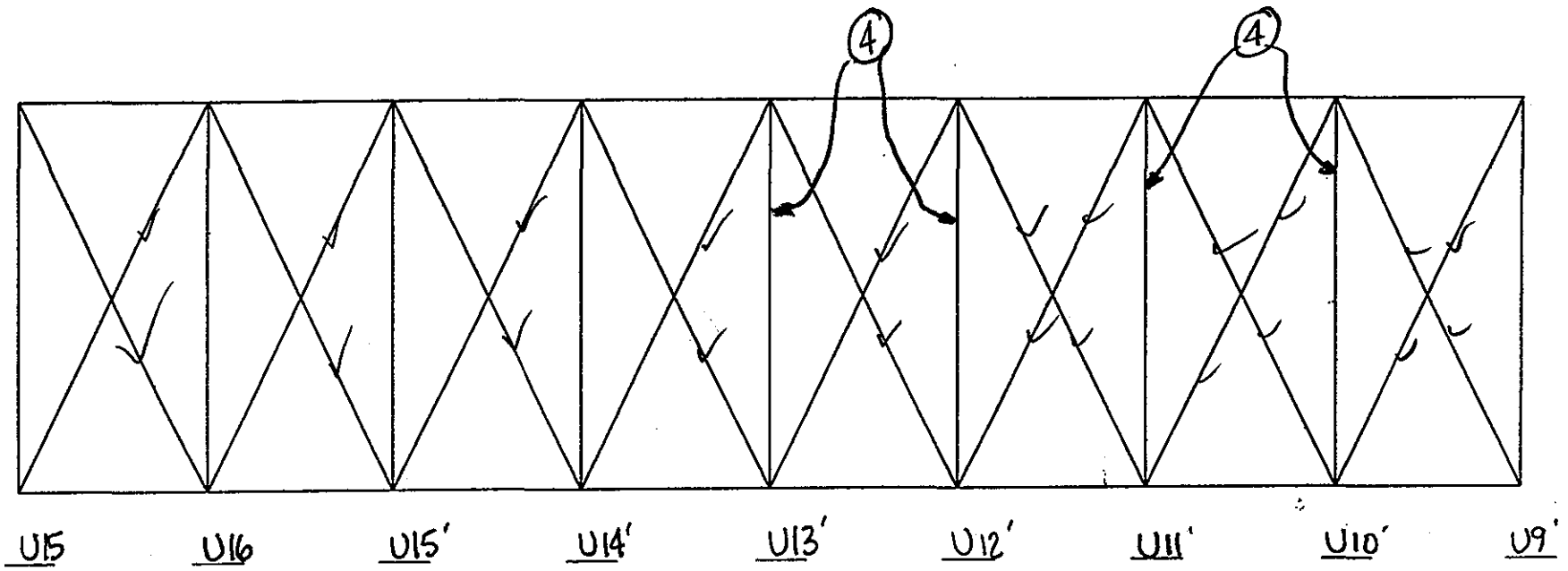

23 227

SPAN 1

Top CHORD BRACING

NOTES:

1. Isolated Areas of Paint Peeling Away From Primer
2. Upto 1/2" IR btwn. Lat. Bracing & Lat. Gusset. R (Typ.)
3. Isolated Areas of upto 1/8" pit. on Lat. Bracing
4. Water Pooling on bot. FE

TRUSS BRACING	
DEPARTMENT OF THE ARMY NEW ENGLAND DISTRICT CORPS OF ENGINEERS	
BOURNE HIGHWAY BRIDGE ROUTINE INSPECTION	
NOTES BY: LICHTENSTEIN CONSULTING ENGINEERS	
JOB #1986	DATE: 7/24/98
CREW: SD, WJ, PWN	SHEET 6 OF 8

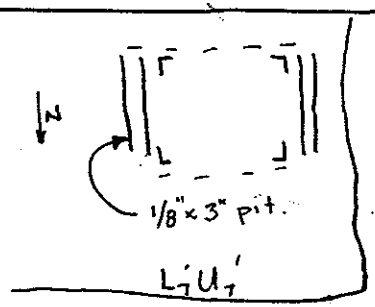

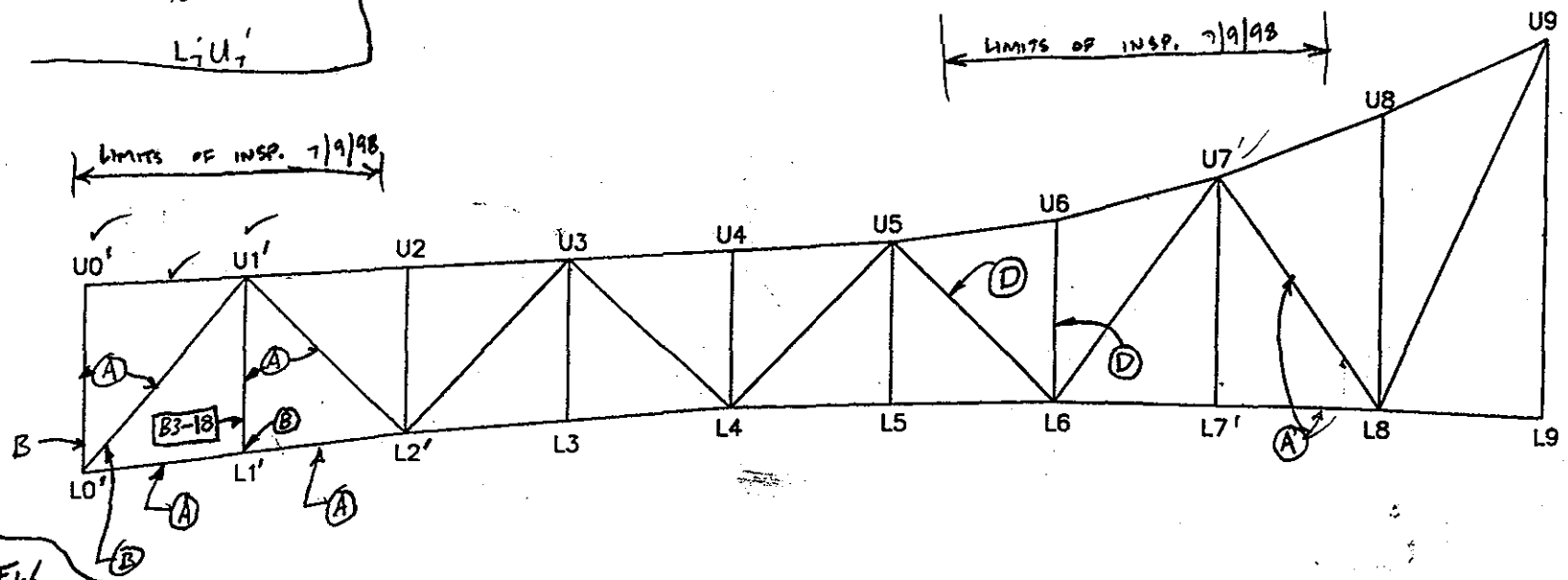

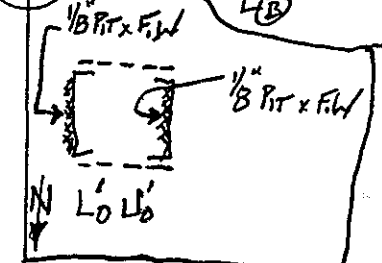

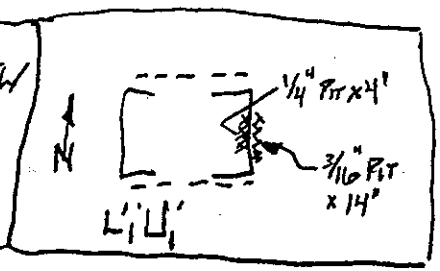

SPAN 2

W TRUSS W ELEVATION

EL

NOTES:

(A) DRAW SUPPORT BRACKETS WELDED TO TRUSS MEMBER

(B) UP TO 1/8" PITTING, 1/2" WIDE ON INSIDE FACE OF GUSSET PL

(C) UP TO 1/8" PITTING, 1/2" HIGH ON GUSSET PL ALONG TOP OF BRACING

(D) UP TO 1/4" (IR) BTWN TRUSS MEMBER CHANNEL & LOWER PL COMM X

TRUSS ELEVATION	
DEPARTMENT OF THE ARMY NEW ENGLAND DISTRICT CORPS OF ENGINEERS	
BOURNE HIGHWAY BRIDGE ROUTINE INSPECTION	
NOTES BY: LICHTENSTEIN CONSULTING ENGINEERS	
JOB #1986	DATE: 7/9/98
CREW: W², SD	SHEET 2 OF 3

227

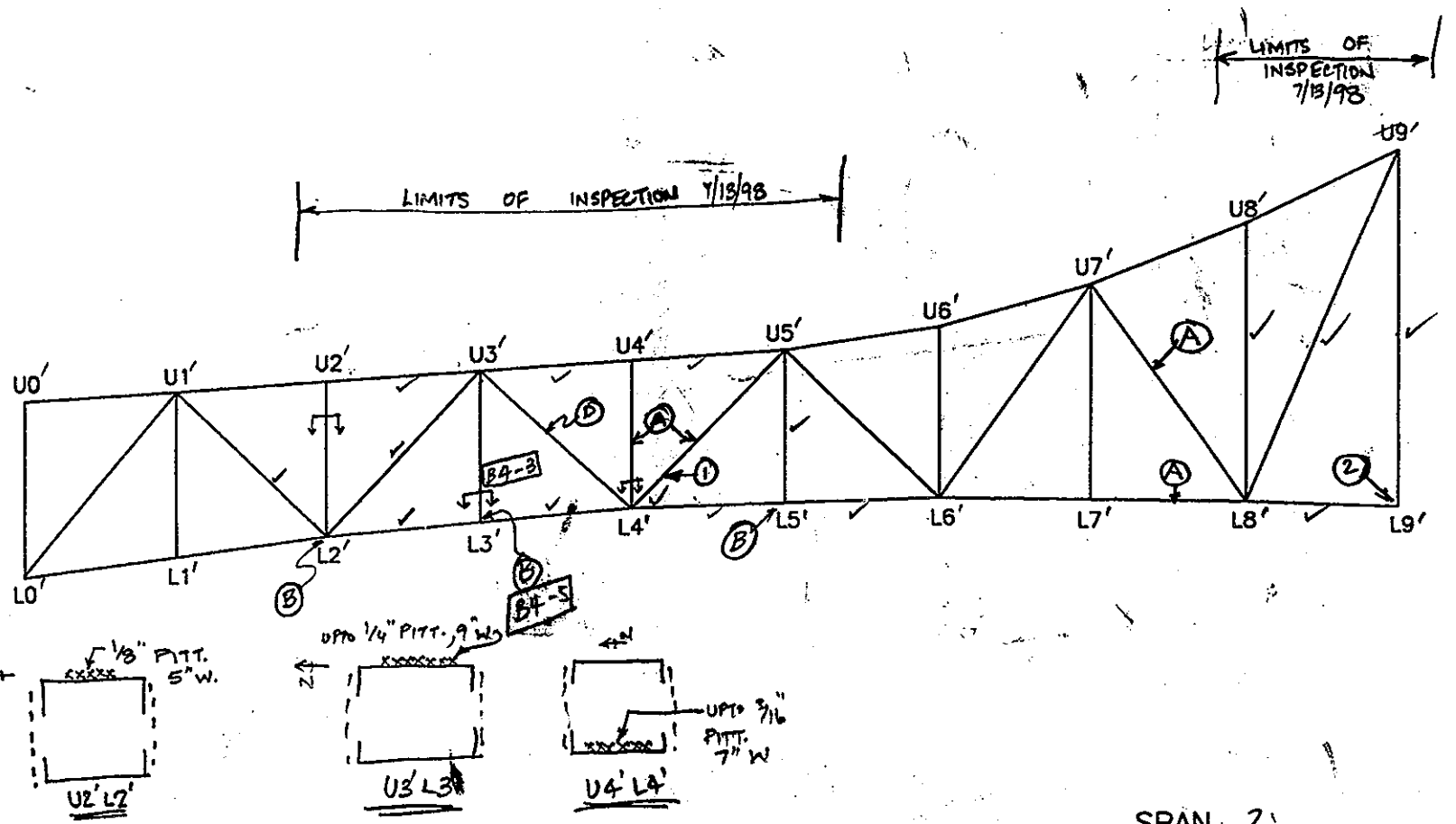

SPAN 2

W TRUSS W ELEVATION

EL

NOTES: (A) DRAIN SUPPORT BRACKETS WELDED TO TRUSS MEMBER

(B) UP TO 1/8" PITTING, 1/2" W ON INSIDE FACE OF GUSSET PL, ALONG TRUSS

(C) UP TO 1/8" PITTING, 1/2" H ON GUSSET PL ALONG TOP OF BRACING CONN. ∠

(D) UP TO 1/4" (1R) BTWN TRUSS MEMBER [& COV. PL

(1) 1/16" PITT. 6" H. ON E. SIDE ⊥ OUTSIDE FACE. L4' U5'

(2) IT STARTING TO FILL UP WITH DEBRIS ON THE BOT. CHOLD

TRUSS ELEVATION

DEPARTMENT OF THE ARMY
NEW ENGLAND DISTRICT CORPS OF ENGINEERS

BOURNE HIGHWAY BRIDGE
ROUTINE INSPECTION

NOTES BY: LICHTENSTEIN
CONSULTING ENGINEERS

JOB #1986	DATE: 7/13/98
CREW: FP, PWN	SHEET 1 OF 4

25
227

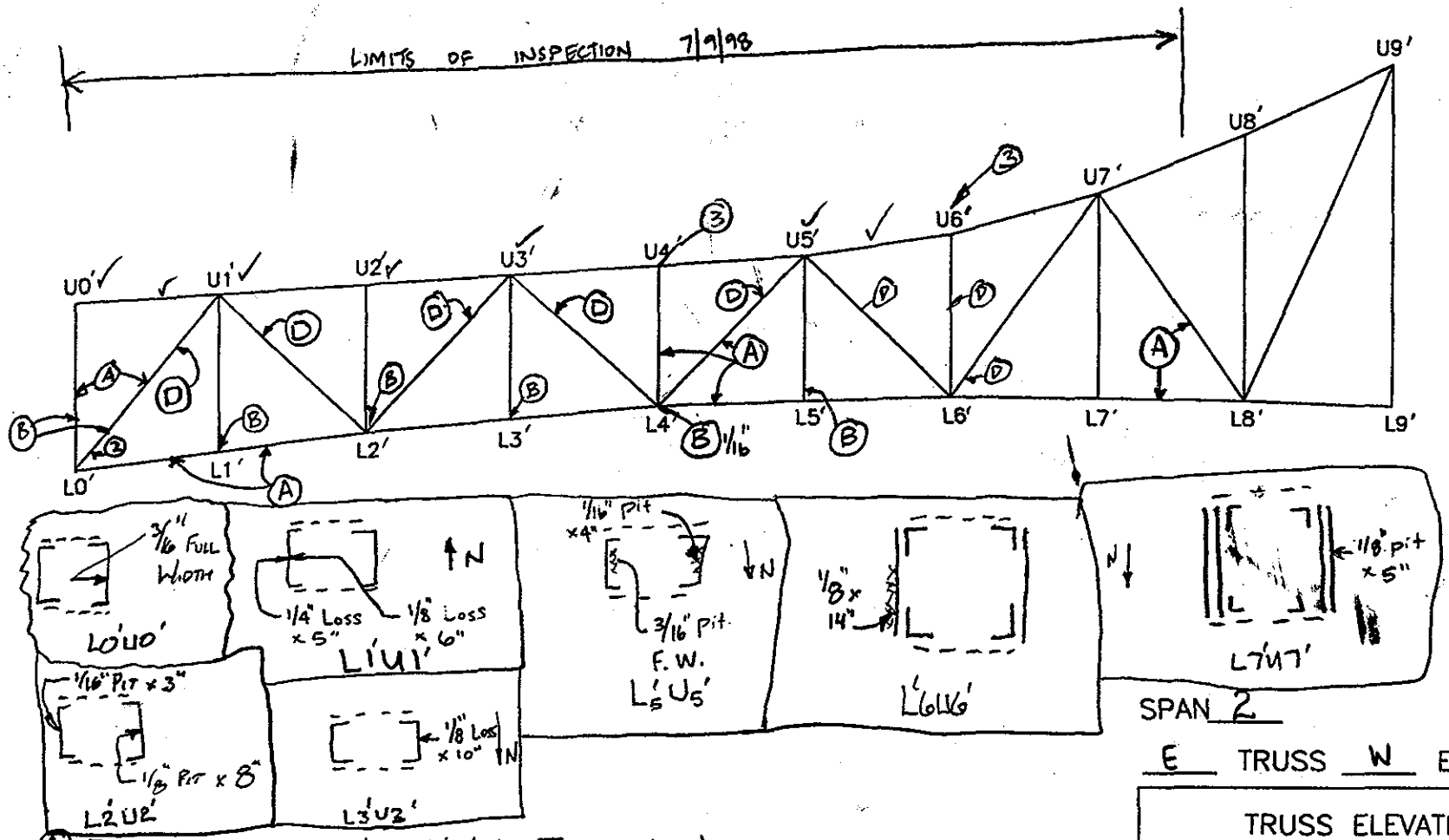

EL

NOTES:
- (A) Drain Support Bracket Welded to Truss Member
- (B) Up to 1/8" pitting, 1/2" Wide on inside face of gusset PL Along Edge of Truss Member
- (C) Up to 1/8" pitting, 1/2" High on gusset PL along top of bracing conn. ∠
- (D) Up to 1/4" IR Btwn. Truss Member Channel & Cover PL
- (1) 1/8" pit. x full Height int. of W. Web PL
- (2) 6 Rivet heads of W. face have 75% Loss.
- (3) 3/16" Pit. W. Face of W. Gusset Along Top & Bot Lat. gusset [B2-3]

TRUSS ELEVATION

DEPARTMENT OF THE ARMY
NEW ENGLAND DISTRICT CORPS OF ENGINEERS

BOURNE HIGHWAY BRIDGE
ROUTINE INSPECTION

NOTES BY: LICHTENSTEIN CONSULTING ENGINEERS

JOB #1986	DATE: 7/9/98
CREW: SD, WW	SHEET 1 OF 3

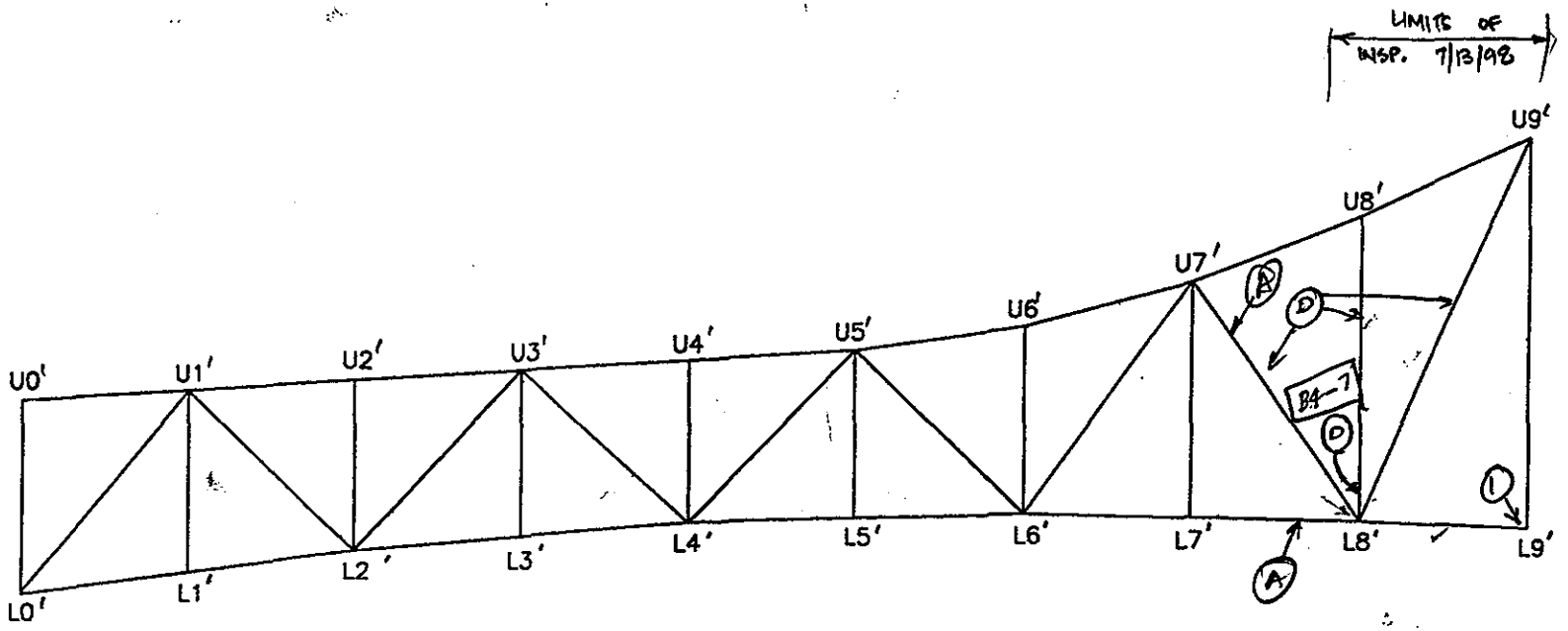

L22 L2

SPAN 2

E TRUSS W ELEVATION

EL

NOTES: (A) DRAIN SUPPORT BRACKET WELDED TO TRUSS MEMBER

(B) UP TO 1/8" PITTING x 1/2" W INSIDE FACE GUSSET R ALONG TRUSS MEMBER

(C) UP TO 1/8" PITTING x 1/2" W OUTSIDE FACE GUSSET R ALONG TOP OF BRACING CONN.

(D) UP TO 1/4" (IR) BTWN TRUSS MEMBER [& GUS. R

(I) JT. STARTING TO FILL UP W/ DEBRIS

TRUSS ELEVATION	
DEPARTMENT OF THE ARMY NEW ENGLAND DISTRICT CORPS OF ENGINEERS	
BOURNE HIGHWAY BRIDGE ROUTINE INSPECTION	
NOTES BY: LICHTENSTEIN CONSULTING ENGINEERS	
JOB #1986	DATE: 7/13/98
CREW: FP, PWN	SHEET 2 OF 4

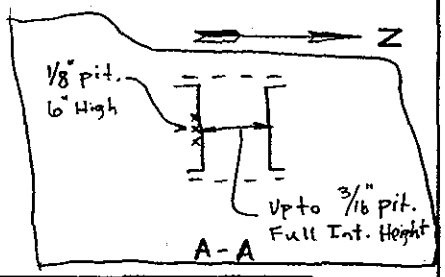

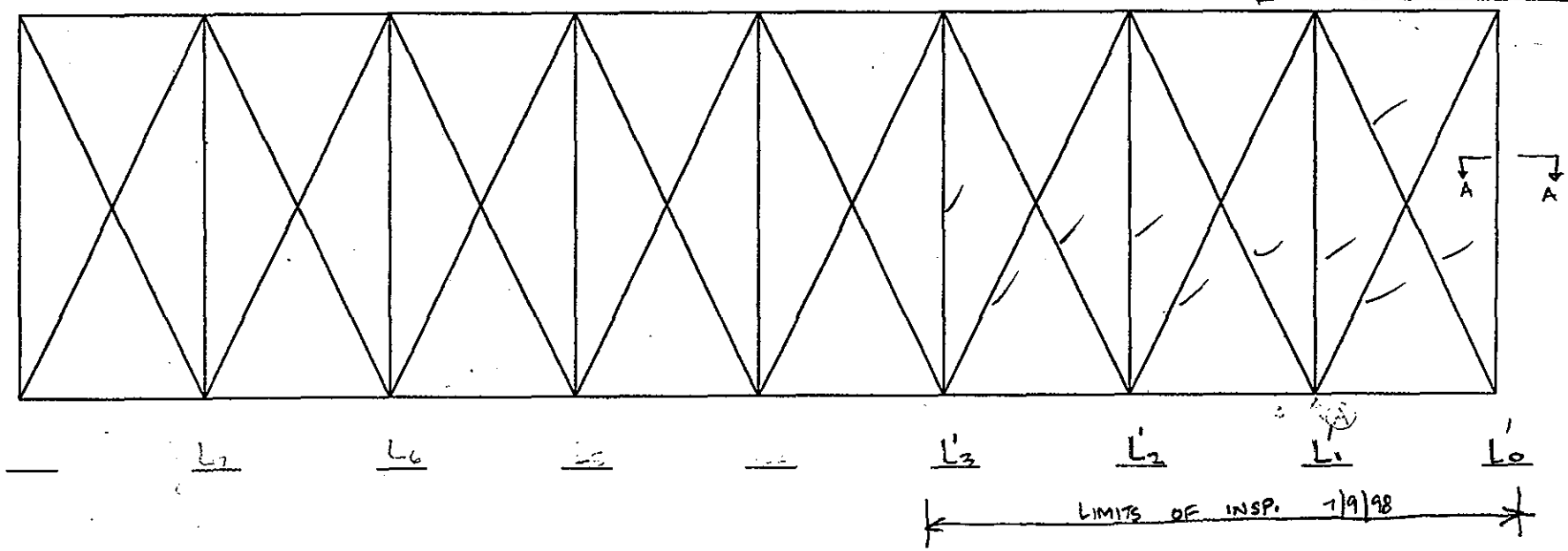

28
227

SPAN 2

Bot. CHORD BRACING

EL

NOTES: (A) Sect AA Typical @ panel pts.

TRUSS BRACING	
DEPARTMENT OF THE ARMY NEW ENGLAND DISTRICT CORPS OF ENGINEERS	
BOURNE HIGHWAY BRIDGE ROUTINE INSPECTION	
NOTES BY: LICHTENSTEIN CONSULTING ENGINEERS	
JOB #1986	DATE: 7/9/98
CREW: SD, WW	SHEET 3 OF 3

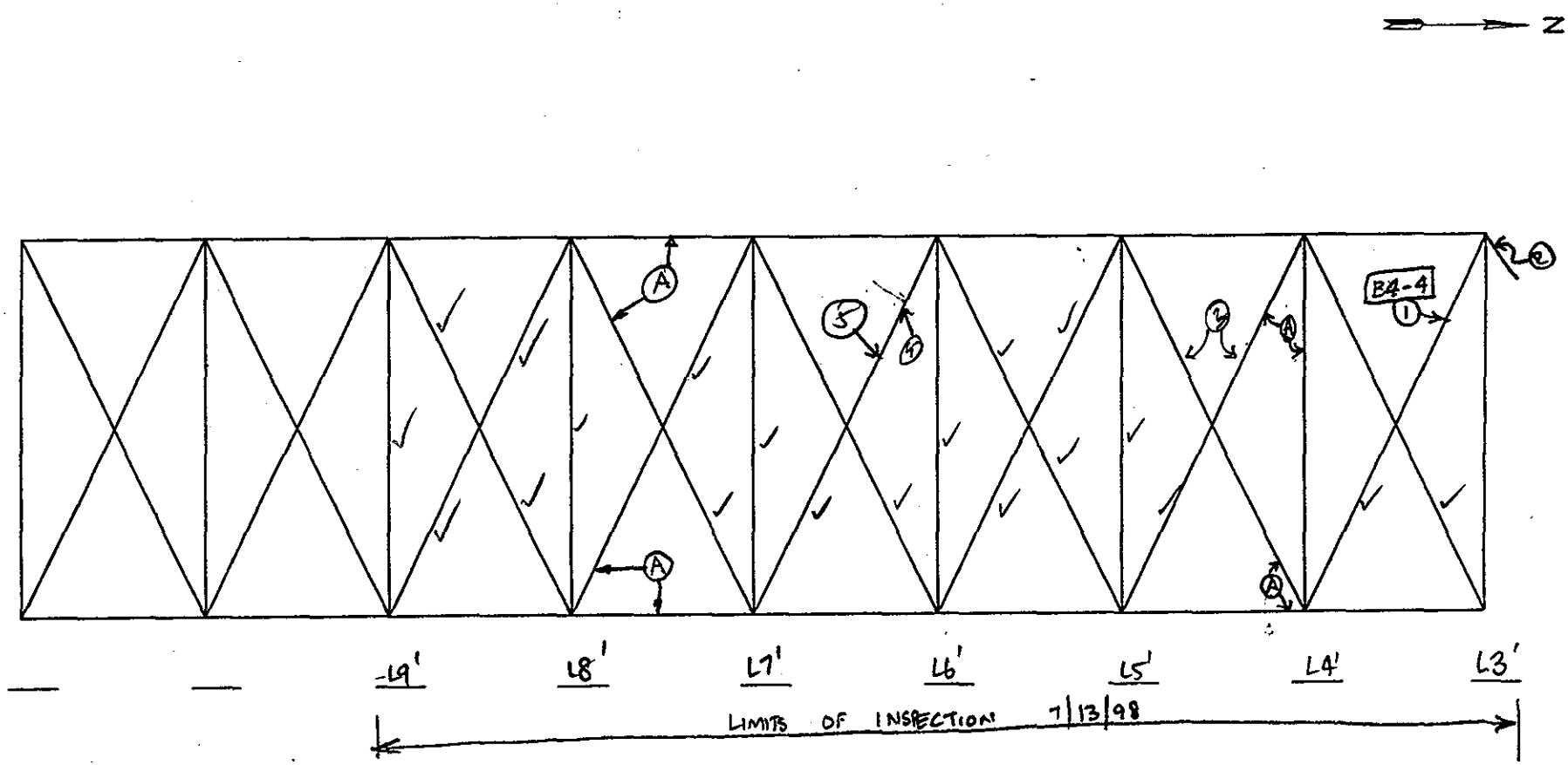

SPAN 2

BOT. CHORD BRACING

TRUSS BRACING

EL

NOTES:

1. 3/4" Vert x 3" LONGIT. Dent in top ℄ ∡ OF BRACING (APPARENT CONSTN. DAMAGE)
2. UPTO 1/4" IR Bet top horiz gusset ℄ & top Bracing ∡s.
3. RANDOM PITTING 1" ⌀ UPTO 1/8" DP ON TOP OF BOTH BRACING ∡s
4. 1/4" DENT (APPARENT CONSTN DAMAGE) 3" LONG
5. 1/2" " " " " 6" "

DEPARTMENT OF THE ARMY
NEW ENGLAND DISTRICT CORPS OF ENGINEERS

BOURNE HIGHWAY BRIDGE
ROUTINE INSPECTION

NOTES BY: LICHTENSTEIN
CONSULTING ENGINEERS

JOB #1986	DATE: 7/13/98
CREW: FP, PWN	SHEET 3 OF 4

29
227

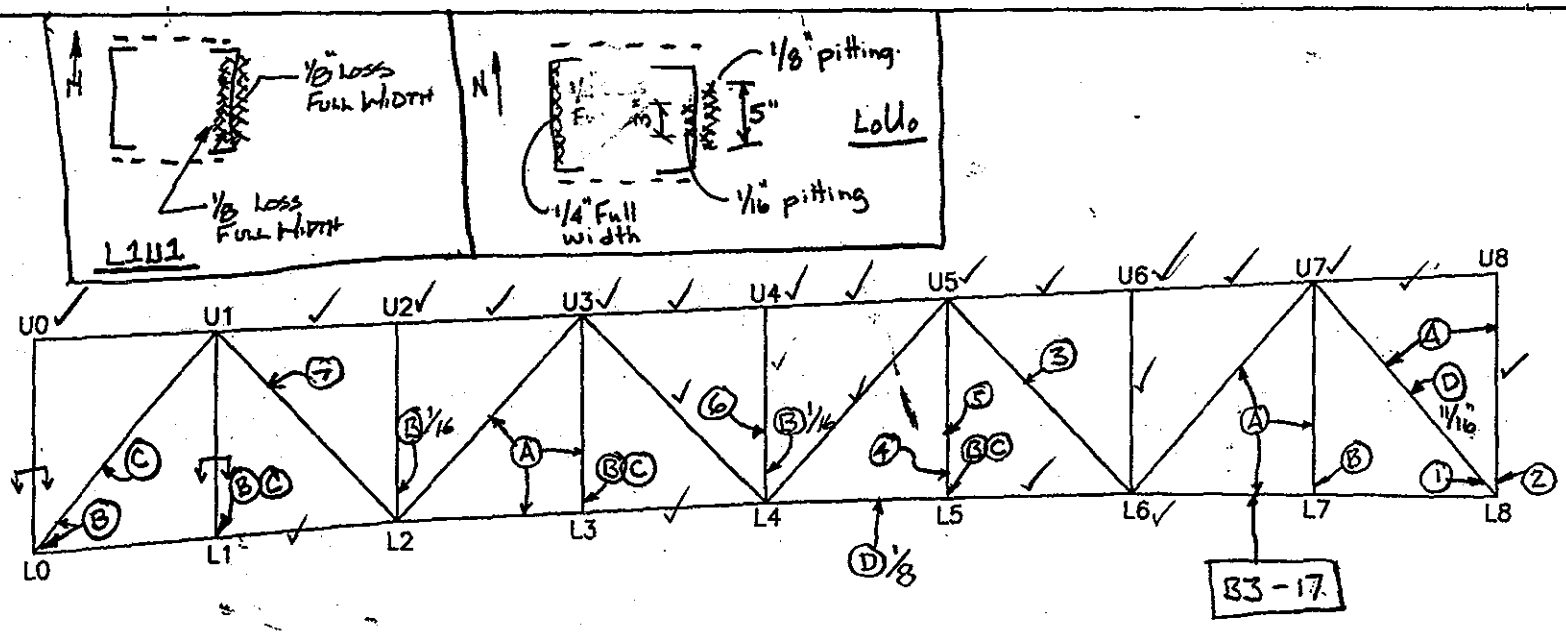

TYPICAL CONDITIONS:

(A) DRAIN SUPPORT BRACKET WELDED TO TRUSS MEMBER

(B) UP TO 1/8" PITTING, 1/2" WIDE ON INSIDE FACE OF GUSSET PL ALONG EDGE OF TRUSS MEMBER → ALL AROUND

(C) UP TO 1/8" PITTING 1/2" HIGH ON GUSSET PL ALONG TOP OF BRACING CONN. ∠S

(D) UP TO 1/4" IR B'TWN TRUSS MEMBER CHANNEL & COV. PL

SPAN 4

W TRUSS E ELEVATION

EL

NOTES:
1. ∠ welded to gusset PL
2. 1/16" pitting on [along gusset PL west face
3. UP TO 1/8" PITT F.W. EACH FACE OF EAST CHANNEL
4. 1/4" x 5" W x 7" H PITT. INBOARD FACE W. CHANNEL
5. SEVERAL PATCHES OF PITTING ON OUTSIDE EAST [→ WORST IS 3/16" x 8" WIDE
6. 1/8" x F.W. PITT. INSIDE E. [w/ 1/16" x 5" PITT ON OUTSIDE @ SAME SECTION
7. UP TO 5/16" PITT x 4" W x 12" H INSIDE FACE E.[

TRUSS ELEVATION	
DEPARTMENT OF THE ARMY NEW ENGLAND DISTRICT CORPS OF ENGINEERS	
BOURNE HIGHWAY BRIDGE ROUTINE INSPECTION	
NOTES BY: LICHTENSTEIN CONSULTING ENGINEERS	
JOB #1986	DATE: 7/8/98
CREW: PWN SD	SHEET 2 OF 4

30
227

TYPICAL: RIVETS TO BATTEN PL'S AT ALL LOWER PANEL POINTS ARE BEGINNING TO MUSHROOM.

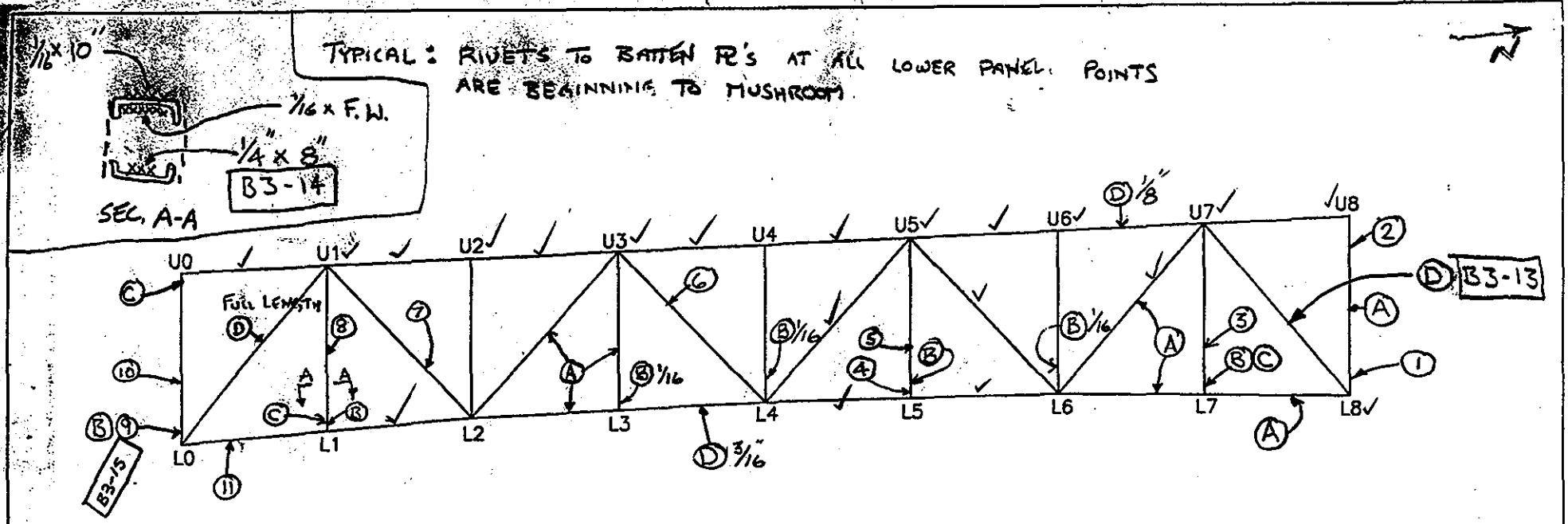

(A) DRAIN SUPPORT BRACKET WELDED TO TRUSS MEMBER

(B) UPTO 1/8" PITTING 1/2" WIDE ON INSIDE FACE OF GUSSET PLS ALONG EDGE OF TRUSS MEMBER, ALL AROUND

(C) UPTO 1/8" PITTING 1/2" HIGH ON GUSSET PL ALONG TOP OF BRACING CONN ∠S

(D) UPTO 1/4" IR BTWN TRUSS MEMBER CHANNEL & SIDE PL

(10) 1/8" x F.W. INSIDE FACE E. VERT. ∠

(11) 1/8" x 3" PATCHES PITTING, FULL LENGTH LOWER CHORD B3-16

EL

NOTES: (1) EYE BOLTS WELDED TO GUSSET PL

(2) 3/16" pitting x 4" W inside face E. Channel

(3) 1/8" PITTING FULL WIDTH OUTSIDE FACE WEST CHANNEL

(4) UP TO 5/8" x 9" GAP BTWN W. GUSS PL & VERT. ∠ WHERE PREVIOUS IR BLASTED AWAY

(5) 1/4" x 3" W x 8" H PITTING INSIDE FACE E. ∠

(6) 1/4" x 5" x 5" PITT. ON INSIDE FACE E. ∠

(7) UP TO 1/4" x FULL WIDTH PITTING OUTSIDE FACE W. ∠

(8) SEVERAL PATCHES OF UP TO 1/4" PITTING THROUGHOUT VERT. WORST CASE → SEC A-A

(9) INSIDE E. GUSSET PL 3/16" x 15 W x 18 H PITT. JUST ABOVE 1/8" x 4 x 12" PIT, ≈ SAME - W. GUSS

SPAN 4

E TRUSS E ELEVATION

TRUSS ELEVATION	
DEPARTMENT OF THE ARMY NEW ENGLAND DISTRICT CORPS OF ENGINEERS	
BOURNE HIGHWAY BRIDGE ROUTINE INSPECTION	
NOTES BY: LICHTENSTEIN CONSULTING ENGINEERS	
JOB #1986	DATE: 7/8/98
CREW: PWN SD	SHEET 1 OF 4

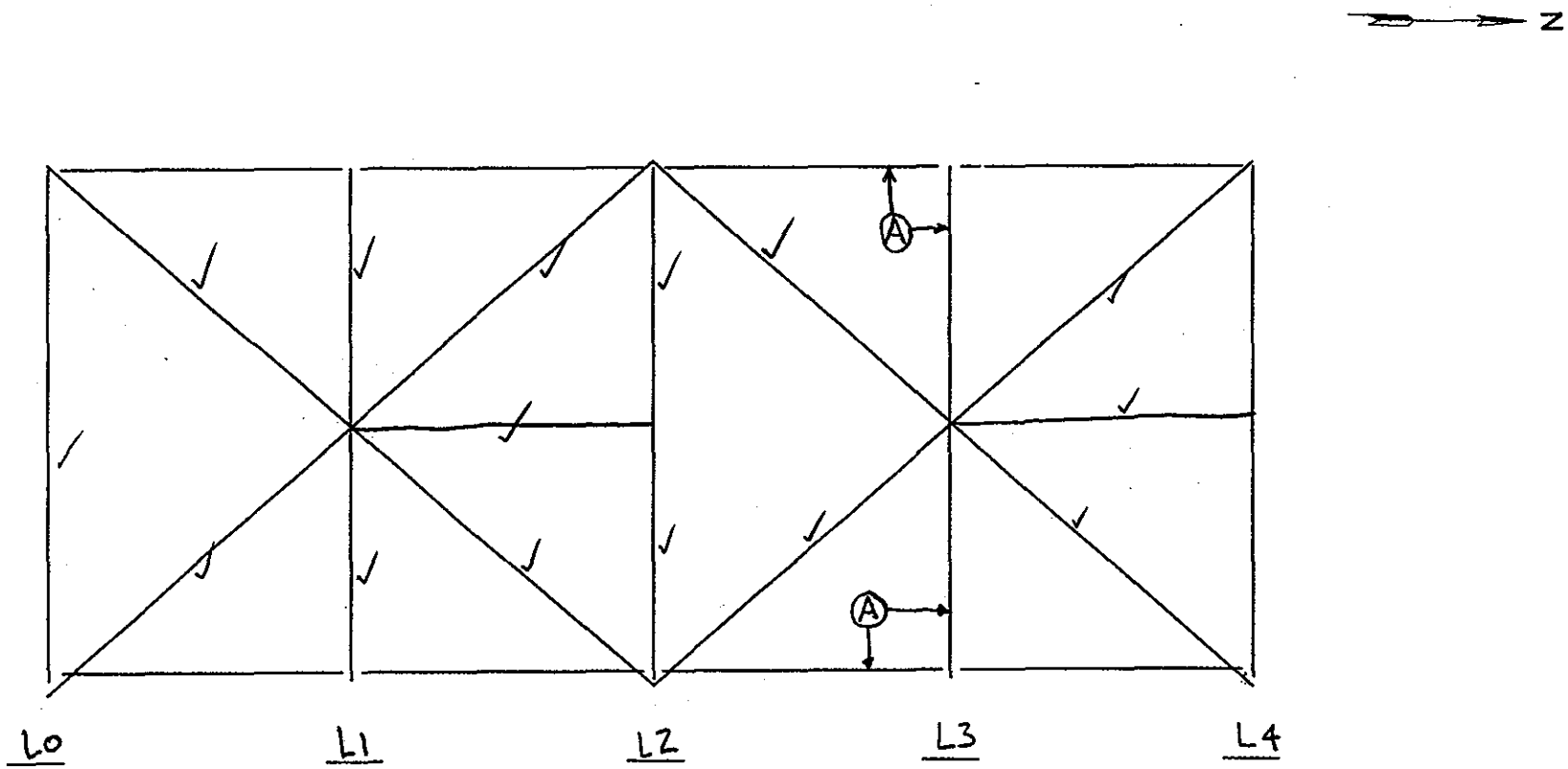

SPAN 4

EL

NOTES:

LOWER CHORD BRACING	
DEPARTMENT OF THE ARMY NEW ENGLAND DISTRICT CORPS OF ENGINEERS	
BOURNE HIGHWAY BRIDGE ROUTINE INSPECTION	
NOTES BY: LICHTENSTEIN CONSULTING ENGINEERS	
JOB #1986	DATE: 7/8/98
CREW: PHN SD	SHEET 4 OF 4

NOTE: ORIGINAL X-BRACE REMOVED BY FLAME CUTTING GUSSET PL & REPLACING W/ BOLTED CONN.
TYPICAL FOR WHOLE SPAN

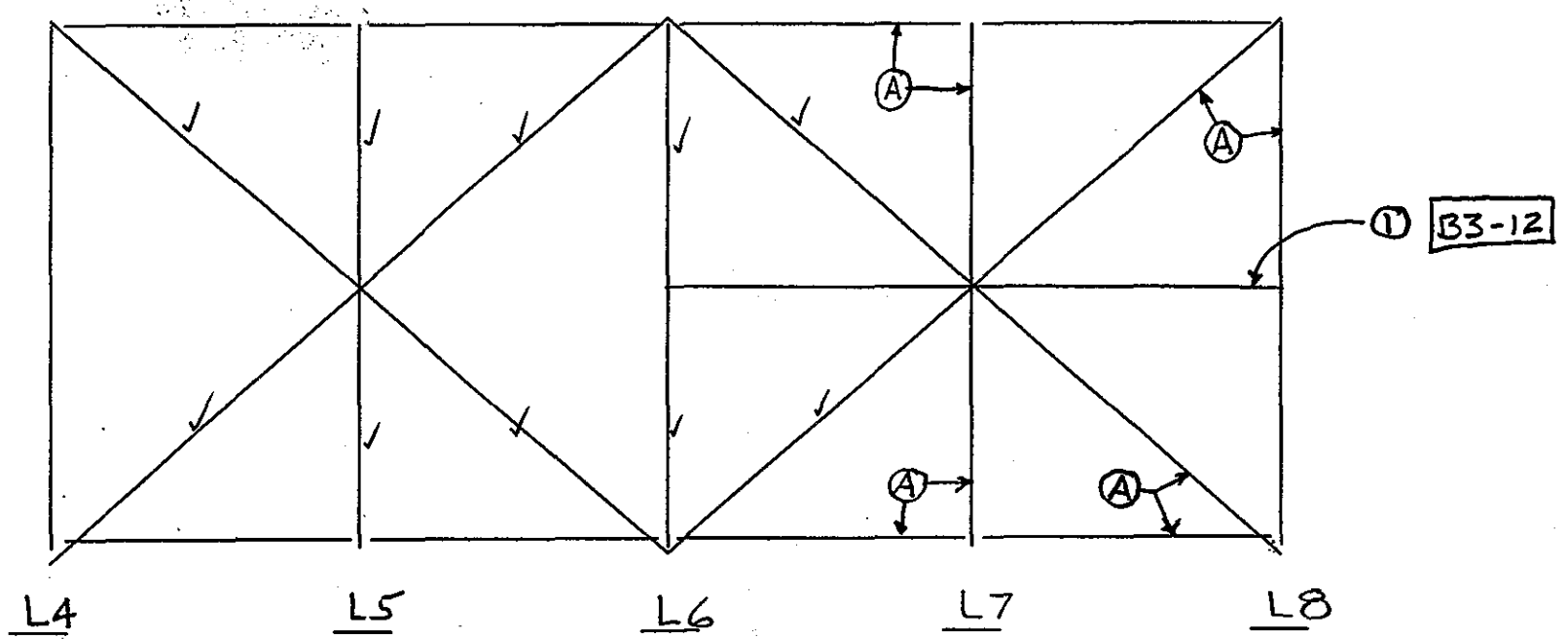

SPAN 4

EL
NOTES: ① UP TO 5/8" IR B'TWN TOP FE ∡ & REPAIR PL

LOWER CHORD BRACING	
DEPARTMENT OF THE ARMY NEW ENGLAND DISTRICT CORPS OF ENGINEERS	
BOURNE HIGHWAY BRIDGE ROUTINE INSPECTION	
NOTES BY: LICHTENSTEIN CONSULTING ENGINEERS	
JOB #1986	DATE: 7/8/98
CREW: PWN SD	SHEET 3 OF 4

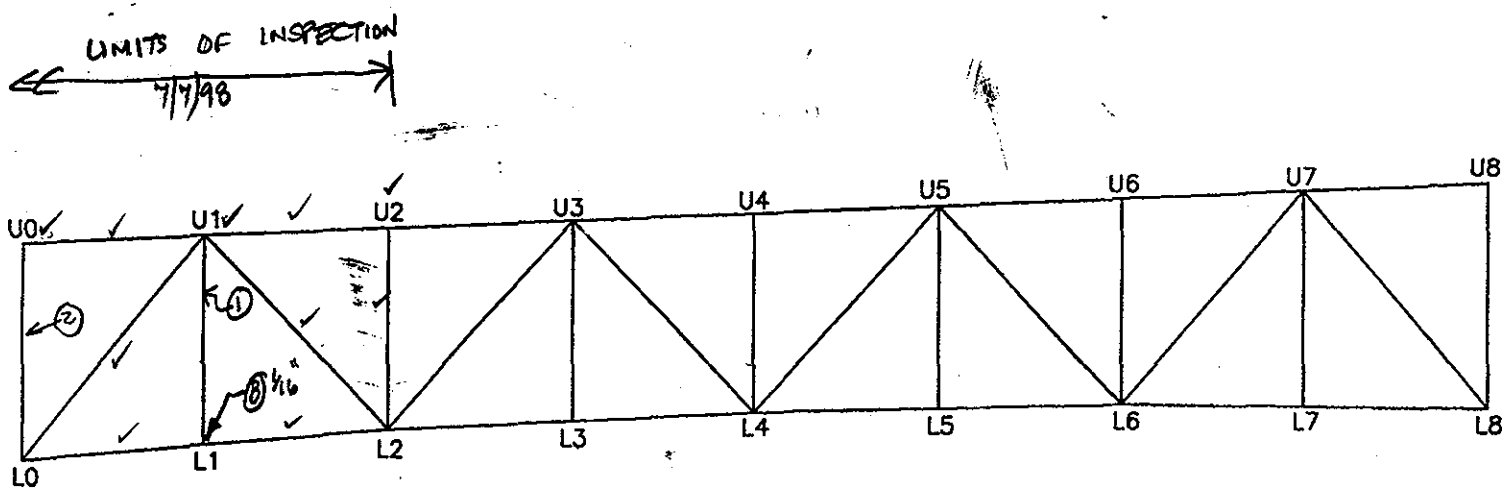

(A) DRAIN SUPPORT BRACKET WELDED TO TRUSS MEMBER

(B) UPTO 1/8" PITTING 1/2" WIDE ON INSIDE FACE OF GUSSET PL'S ALONG EDGE OF TRUSS MEMBER, ALL AROUND

(C) UPTO 1/8" PITTING 1/2" HIGH ON GUSSET PL ALONG TOP OF BRACING CONN. X'S

(D) UPTO 1/4" IR BTWN. TRUSS MEMBER CHANNEL & SIDE PL

227

SPAN 6

W TRUSS E ELEVATION

EL

NOTES:

① 1/8" PITT. F.W. INSIDE FACE OF E.C.

② 1/8" PITT. F.W., INSIDE FACE OF W.C.

TRUSS ELEVATION

DEPARTMENT OF THE ARMY

NEW ENGLAND DISTRICT CORPS OF ENGINEERS

BOURNE HIGHWAY BRIDGE

ROUTINE INSPECTION

NOTES BY: LICHTENSTEIN

CONSULTING ENGINEERS

JOB #1986 | DATE: 7/7/98

CREW: CP, [illegible] | SHEET 4 OF 5

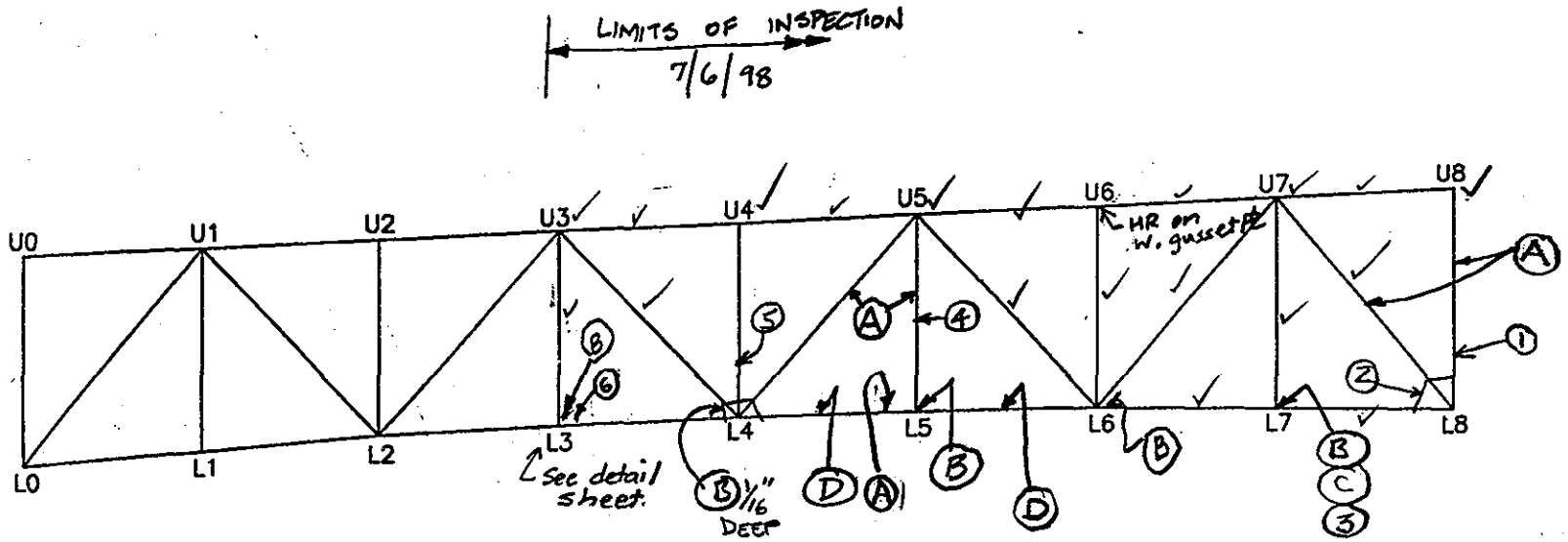

(A) DRAIN SUPPORT BRACKET WELDED TO TRUSS MEMBER

(B) UP TO 1/8" PITTING 1/2" WIDE ON INSIDE FACE OF GUSSET PL'S ALONG EDGE OF TRUSS MEMBER, ALL AROUND

(C) UP TO 1/8" PITTING 1/2" HIGH ON GUSSET ALONG TOP OF BRACING CONN. ∠'S

(D) UP TO 1/4" IR BTWN TRUSS MEMBER CHANNEL & SIDE PL

SPAN 6

W TRUSS E ELEVATION

EL

NOTES: (A)

(1) 6" WIDE AREA OF 1/16" PITTING → E. FACE, EAST CHANNEL

(2) 1/16" PITTING TYPICAL ON GUSSET PL ALONG INTERFACES OF CONNECTING PL'S, ∠'S AND TRUSS MEMBERS → 1" WIDE MAX. 1 AREA 3/16" DEEP × 7" LONG × 1" HIGH - INSIDE FACE E. GUS.

(3) 3/16" PITTING 3" WIDE, OUTBOARD FACE OF E. GUSSET PL

(4) 3/16" PITT. 4" WIDE INBOARD FACE E. CHANNEL

(5) 1/8" PITT 3" Ø INSIDE FACE E. CHANNEL

(6) Missing rivet in top lacing bar

TRUSS ELEVATION	
DEPARTMENT OF THE ARMY NEW ENGLAND DISTRICT CORPS OF ENGINEERS	
BOURNE HIGHWAY BRIDGE ROUTINE INSPECTION	
NOTES BY: LICHTENSTEIN CONSULTING ENGINEERS	
JOB #1986	DATE: 7/6/98
CREW: PWN FP	SHEET 1 OF 3

35 227

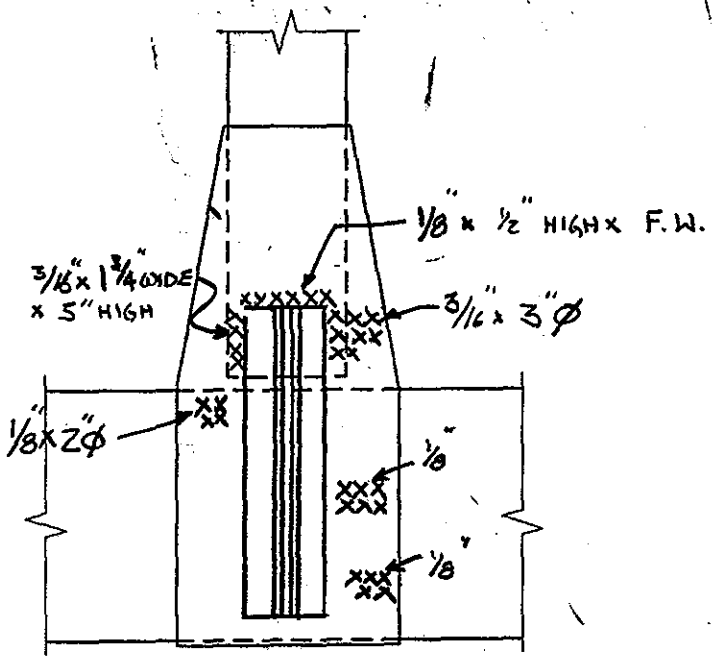

B3-4

E ELEV.

PANEL POINT L3

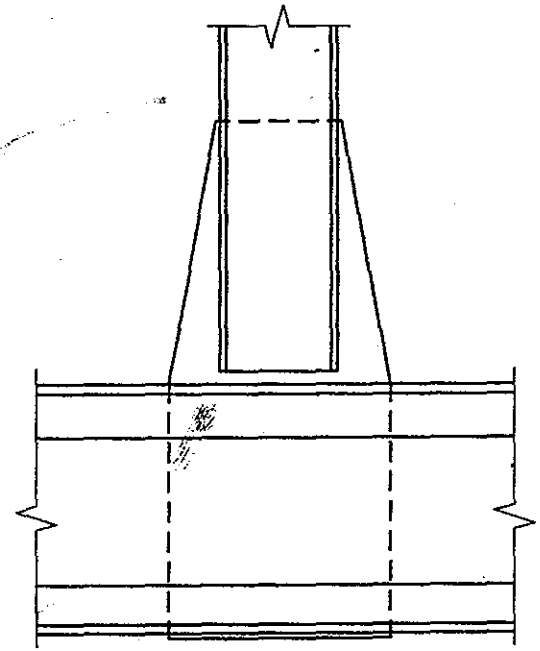

___ ELEV. INBOARD FACE

PANEL POINT ___

XX = PITTING

SPAN 6 W TRUSS

EL

NOTES:

TRUSS JOINT	
DEPARTMENT OF THE ARMY NEW ENGLAND DISTRICT CORPS OF ENGINEERS	
BOURNE HIGHWAY BRIDGE ROUTINE INSPECTION	
NOTES BY: LICHTENSTEIN CONSULTING ENGINEERS	
JOB #1986	DATE: 7/6/98
CREW: Pwn FP	SHEET 2 OF 3

36
227

(a) 1/16" PITTING UPTO 4" ϕ ON INSIDE & OUTSIDE FACE OF W. C.

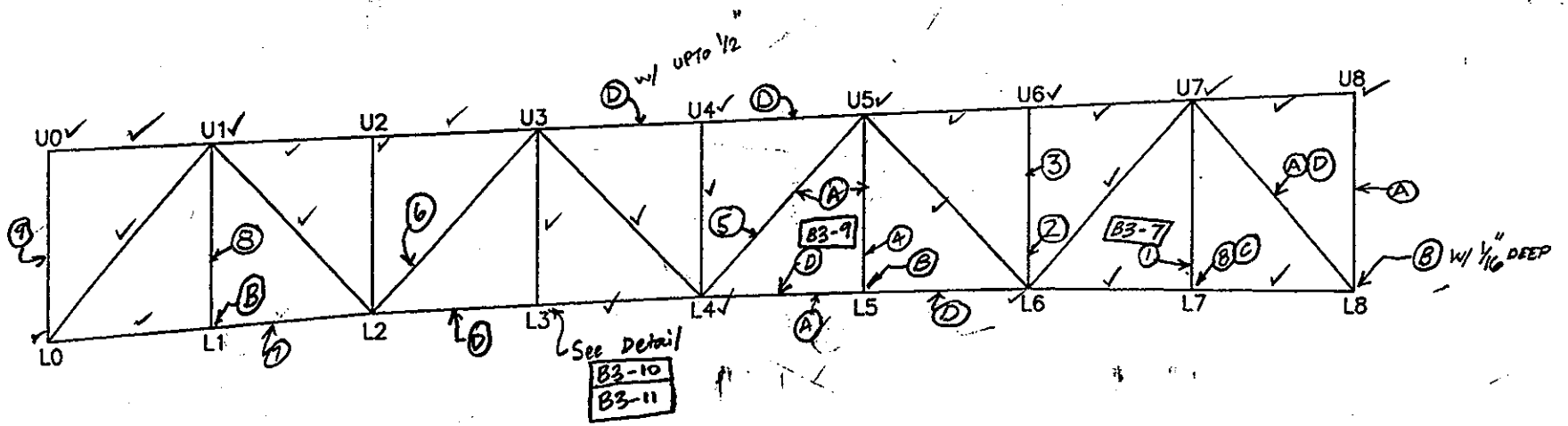

(A) DRAIN SUPPORT BRACKET WELDED TO TRUSS MEMBER

(B) UPTO 1/8" PITTING 1/2" WIDE ON INSIDE FACE OF GUSSET PLS ALONG EDGE OF TRUSS MEMBER, ALL AROUND

(C) UPTO 1/8" PITTING 1/2" HIGH ON GUSSET PL ALONG TOP OF BRACING CONN. ∠s

(D) UPTO 1/4" IR BTWN TRUSS MEMBER CHANNEL & SIDE PL

L22 L3

SPAN 6

E TRUSS E ELEVATION

EL

NOTES:

1. 3/16" THK. REM. FOR 2" WIDTH ON BOT. LACING BAR ON N. FACE OF L7U7
2. 1/4" REM FOR FULL WIDTH OF BOTT. LACING BAR L6U6 → BOTH NORTH & SOUTH
3. 1/4" x 3" ϕ PITT. INSIDE FACE E. CHANNEL L6U6
4. 1/4" x 3" ϕ PITT. INSIDE FACE E. CHANNEL L5U5, 1/16" x 2" W. PITT. ON OUTSIDE FACE OF W. C. L5U5.
5. 1/8" x 3" ϕ PITTING ON INSIDE FACE OF BOTH C's L4U5
6. 1/4" x 3" ϕ PITT. ON INSIDE FACE OF E. C
7. 1/8" PITT. x 1" H. ON INSIDE OF E. C.
8. UP TO 1/4" PITTING x 4" ϕ INSIDE FACE E. C

TRUSS ELEVATION	
DEPARTMENT OF THE ARMY NEW ENGLAND DISTRICT CORPS OF ENGINEERS	
BOURNE HIGHWAY BRIDGE ROUTINE INSPECTION	
NOTES BY: LICHTENSTEIN CONSULTING ENGINEERS	
JOB #1986	DATE: 7/7/98
CREW: FP, PWN	SHEET 1 OF 5

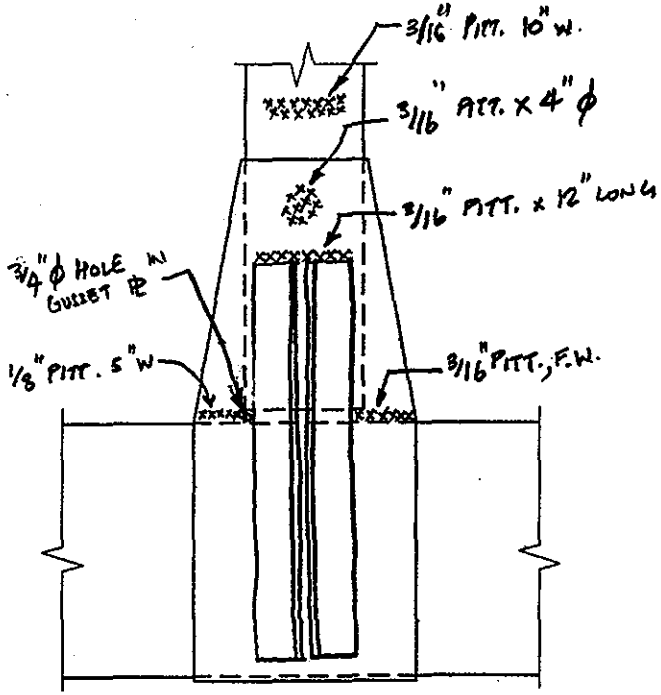

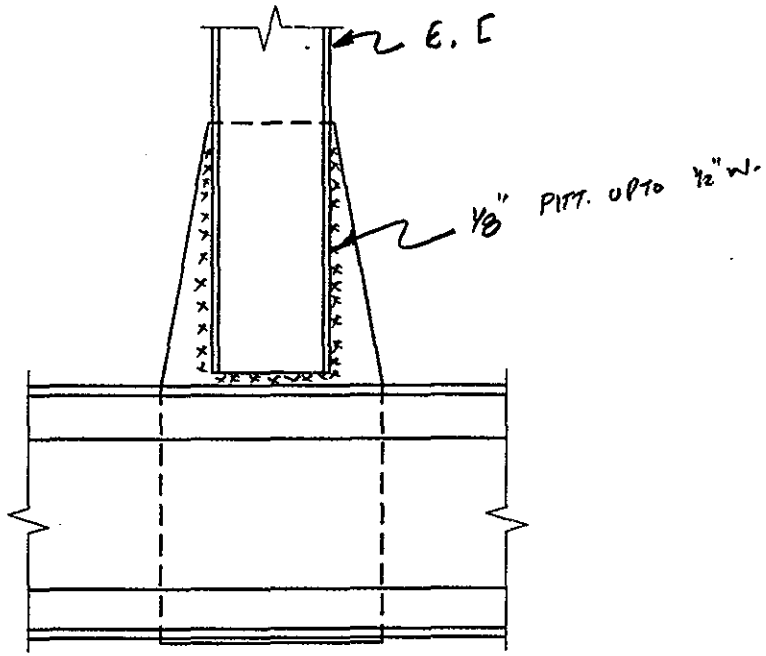

B3-10
B3-11

W. ELEV.

PANEL POINT L3

E ELEV. INBOARD FACE

PANEL POINT L3

SPAN 6 E TRUSS

EL
NOTES:

TRUSS JOINT	
DEPARTMENT OF THE ARMY NEW ENGLAND DISTRICT CORPS OF ENGINEERS	
BOURNE HIGHWAY BRIDGE ROUTINE INSPECTION	
NOTES BY: LICHTENSTEIN CONSULTING ENGINEERS	
JOB #1986	DATE: 7/7/98
CREW: FP PWN	SHEET 3 OF 5

38
227

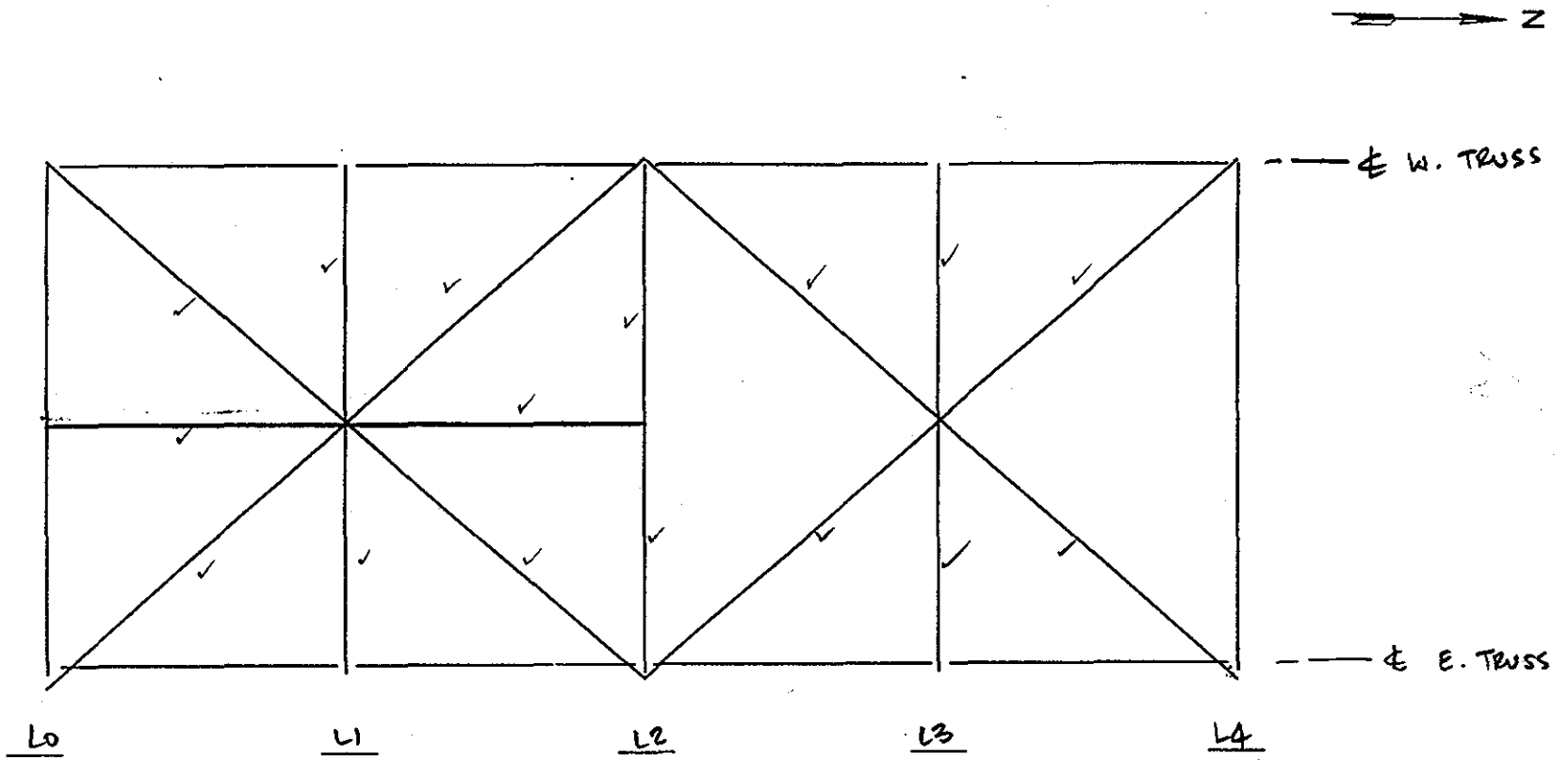

SPAN 6

EL
NOTES:

LOWER CHORD BRACING	
DEPARTMENT OF THE ARMY NEW ENGLAND DISTRICT CORPS OF ENGINEERS	
BOURNE HIGHWAY BRIDGE ROUTINE INSPECTION	
NOTES BY: LICHTENSTEIN CONSULTING ENGINEERS	
JOB #1986	DATE: 7/7/98
CREW: FP, PWN	SHEET 5 OF 5

NOTE: ORIGINAL X-BRACE REMOVED BY FLAME CUTTING BOTTOM GUSSET PL & REPLACED W/ BOLTED CONN. (TYPICAL THROUGHOUT SPAN 6) AT ALL X BRACING CONN.

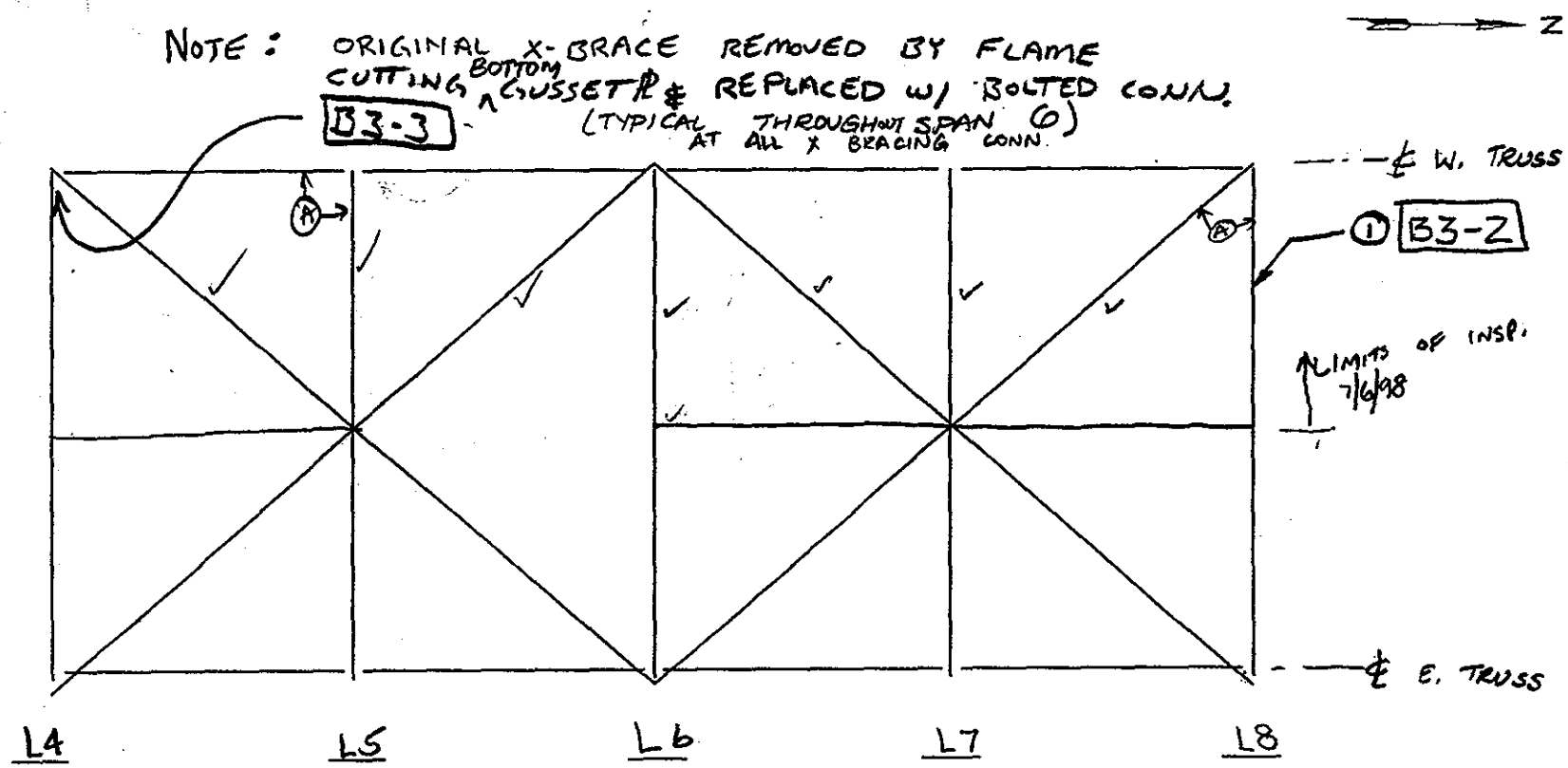

SPAN 6

NOTES: ① 100% LOSS OF OUTER 3/4" OF TOP FLANGE ANGLE TAPERED TO FULL THICKNESS NEXT 1½"

LOWER CHORD BRACING	
DEPARTMENT OF THE ARMY NEW ENGLAND DISTRICT CORPS OF ENGINEERS	
BOURNE HIGHWAY BRIDGE ROUTINE INSPECTION	
NOTES BY: LICHTENSTEIN CONSULTING ENGINEERS	
JOB #1986	DATE: 7/6/98
CREW: PWN FP	SHEET 3 OF 3

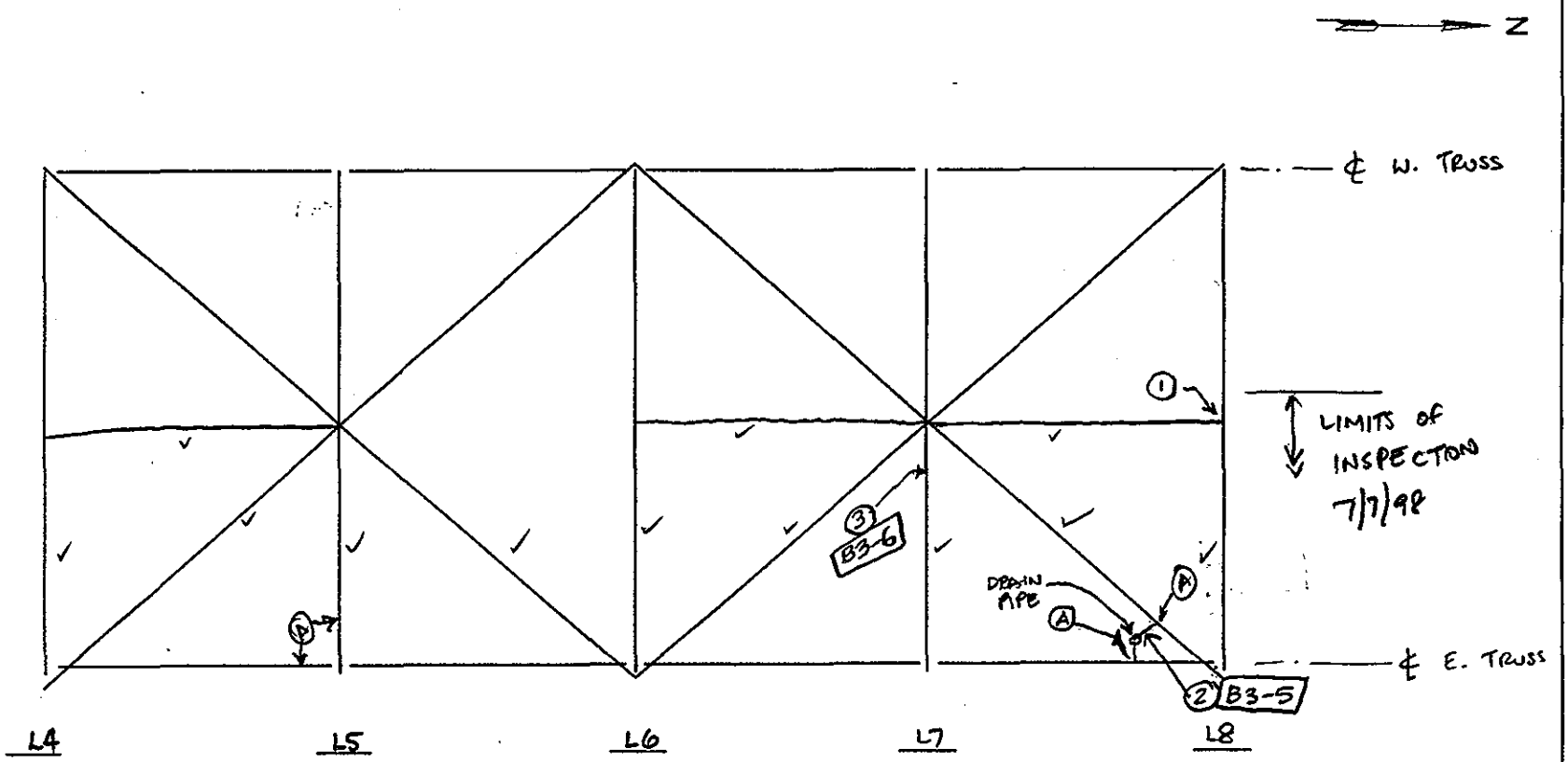

TYP. CONDITION: THE HORIZ. BOT. CONN. PLS FOR THE X-BRACING ARE FLAME CUT

SPAN 6

EL

NOTES:
1. 5/8" IR BTWN LONGIT. BRACING CONN PLS AND LATERAL BRACING ∠s
2. LOOSE BOLTS IN CONN. OF DRAIN PIPE BRACKET TO PIPE
3. 3/4" ϕ HOLE THROUGH O.S.L. OF BRACING CONN ∠

LOWER CHORD BRACING	
DEPARTMENT OF THE ARMY NEW ENGLAND DISTRICT CORPS OF ENGINEERS	
BOURNE HIGHWAY BRIDGE ROUTINE INSPECTION	
NOTES BY: LICHTENSTEIN CONSULTING ENGINEERS	
JOB #1986	DATE: 7/7/98
CREW: FP, PWN	SHEET 2 OF 5

41
227

II. FLOOR SYSTEM

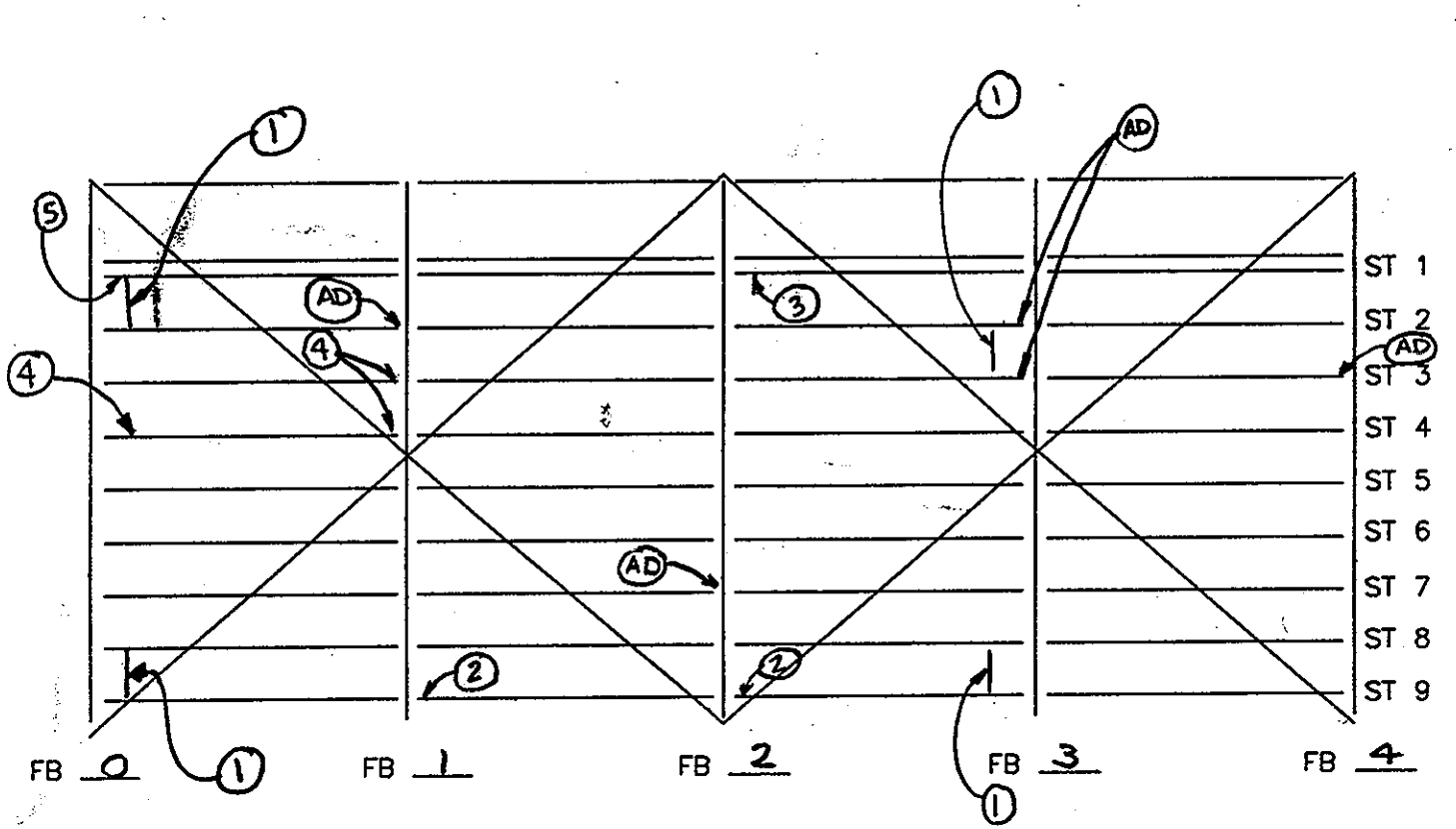

SPAN 7

NOTES:

(Y) FLAME CUT COPE ON STR WEB TO FB CONN.
(S) 3/4" Ø DRILL HOLE IN TOP FE OF STR
(R) UTIL PIPE SUPPORT BRACKET WELDED TO FB WEB
(1) Drain pipe bracket bolted to Str. Web.
(2) Approx. 1/4" x 2" High Loss on bot. W. Web of St. 9 @ FB Conn.
(3) 1/16" x 1" high Loss on Bot. E. Web of St. 1 @ FB conn.
(4) St. Bot. Flange Flame Cut @ FB conn.
(5) St. 1 has med. rust on bot. FE @ FB0 Conn.

FLOOR SYSTEM	
DEPARTMENT OF THE ARMY NEW ENGLAND DISTRICT CORPS OF ENGINEERS	
BOURNE HIGHWAY BRIDGE ROUTINE INSPECTION	
NOTES BY: LICHTENSTEIN CONSULTING ENGINEERS	
JOB #1986	DATE: 7/21/98
CREW: SD, WW	SHEET 2 OF 10

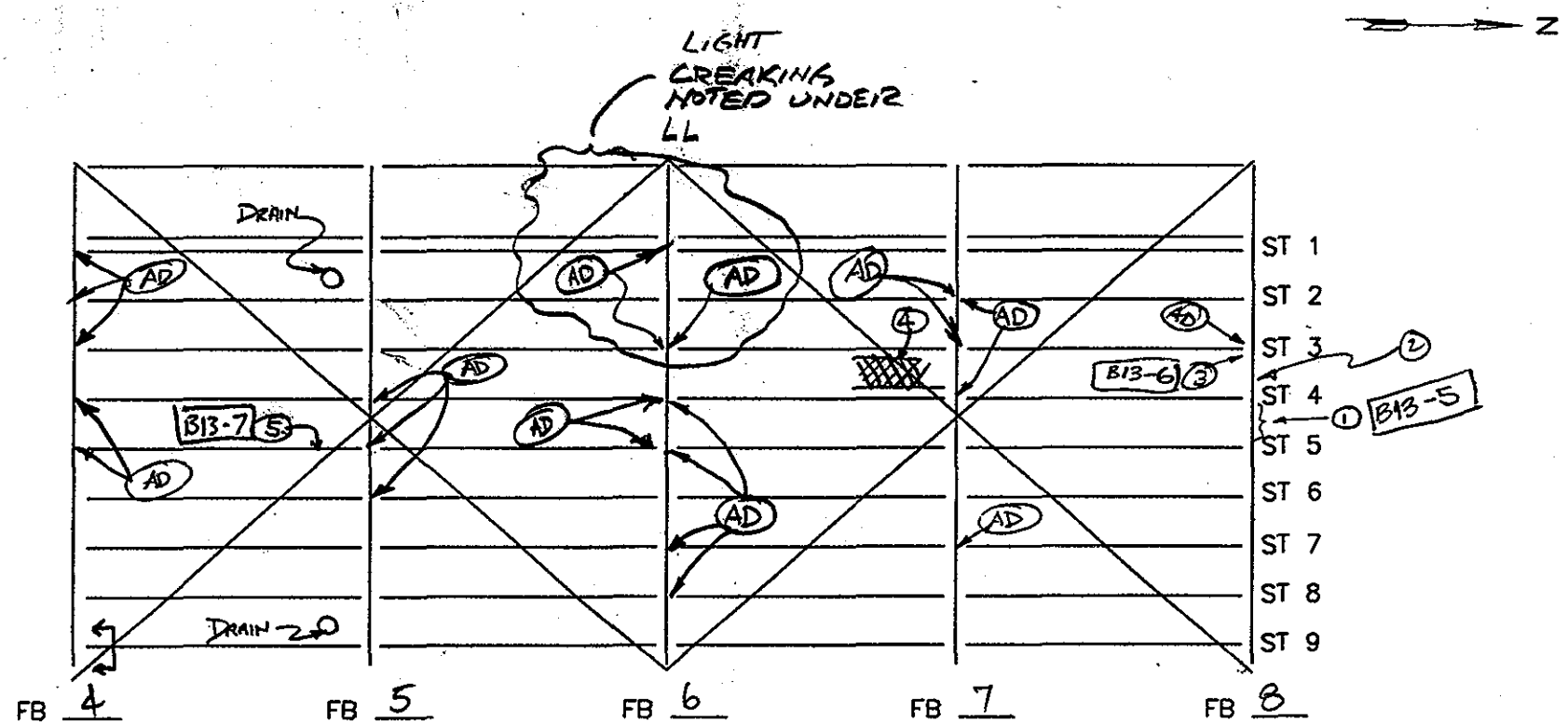

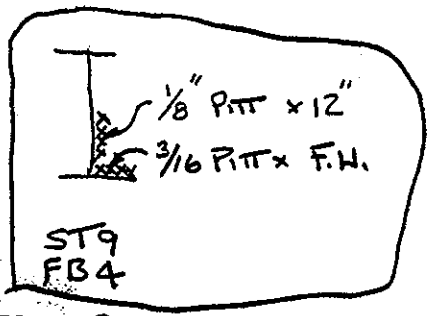

NOTES:
- (Y) FLAME CUT COPE ON STR. WEB TO FB CONN.
- (S) 3/4" ϕ DRILLED HOLE 12" c/c, TOP ℄, FULL LENGTH
- (R) UTILITY PIPE SUPPORT WELDED TO FB WEB
- (1) HR ON FB, N. FACE, BOT. 1/2 OF WEB & BOT ℄
- (2) FLAME CUT WELDED ℄ ALONG WEB, JUST ABOVE BOT ℄ ⅋, FULL LENGTH OF FB
- (3) LADDER SUPP. ⅋s, WALKWAY RAIL ⅋& ℄s WELDED TO FB WEB
- (4) LOOSE RAILING BOLT (CATWALK) w/ (AD)
- (5) BOT. ℄ STRINGER BOWED ⅋ 1/2" – WEST SIDE

SPAN 7

FLOOR SYSTEM

DEPARTMENT OF THE ARMY
NEW ENGLAND DISTRICT CORPS OF ENGINEERS

BOURNE HIGHWAY BRIDGE
ROUTINE INSPECTION

NOTES BY: LICHTENSTEIN
CONSULTING ENGINEERS

JOB #1986 | DATE: 7/21/98

CREW: FP, PWN | SHEET 5 OF 5

43
227

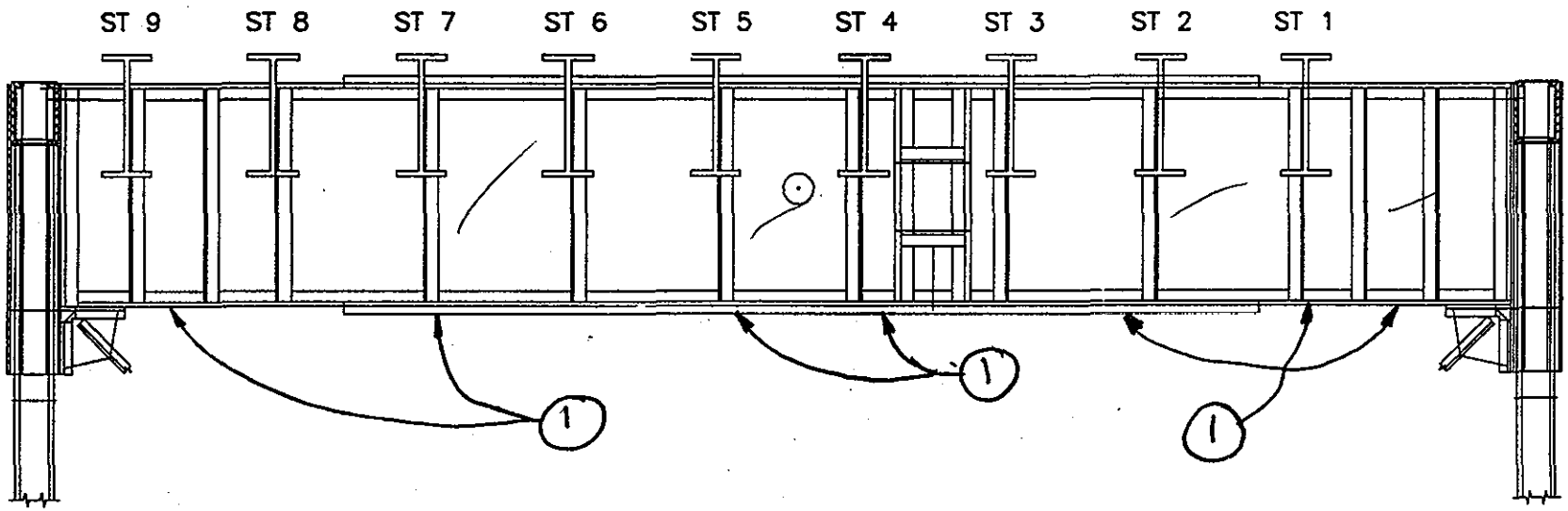

44 221

SPAN 7
FLOORBEAM 0 N ELEV.

NOTES: (1) ¼ weld to bot. FE of FB

FLOORBEAM ELEVATION

DEPARTMENT OF THE ARMY
NEW ENGLAND DISTRICT CORPS OF ENGINEERS

BOURNE HIGHWAY BRIDGE
ROUTINE INSPECTION

NOTES BY: LICHTENSTEIN
CONSULTING ENGINEERS

JOB #1986 | DATE: 7/21/98
CREW: SD, WW | SHEET 3 OF 10

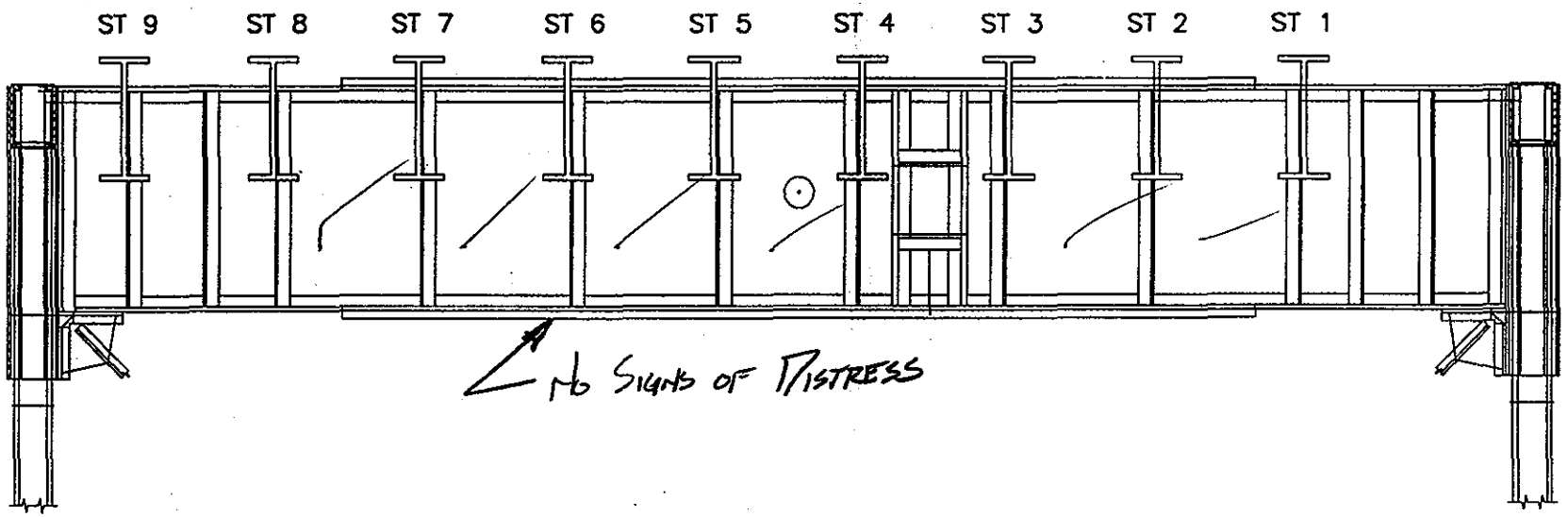

L22 45 227

SPAN 7
FLOORBEAM 1 N ELEV.

NOTES:

FLOORBEAM ELEVATION

DEPARTMENT OF THE ARMY
NEW ENGLAND DISTRICT CORPS OF ENGINEERS

BOURNE HIGHWAY BRIDGE
ROUTINE INSPECTION

NOTES BY: LICHTENSTEIN
CONSULTING ENGINEERS

JOB #1986 DATE: 7/21/98

CREW: SD, [illegible] SHEET 4 OF 19

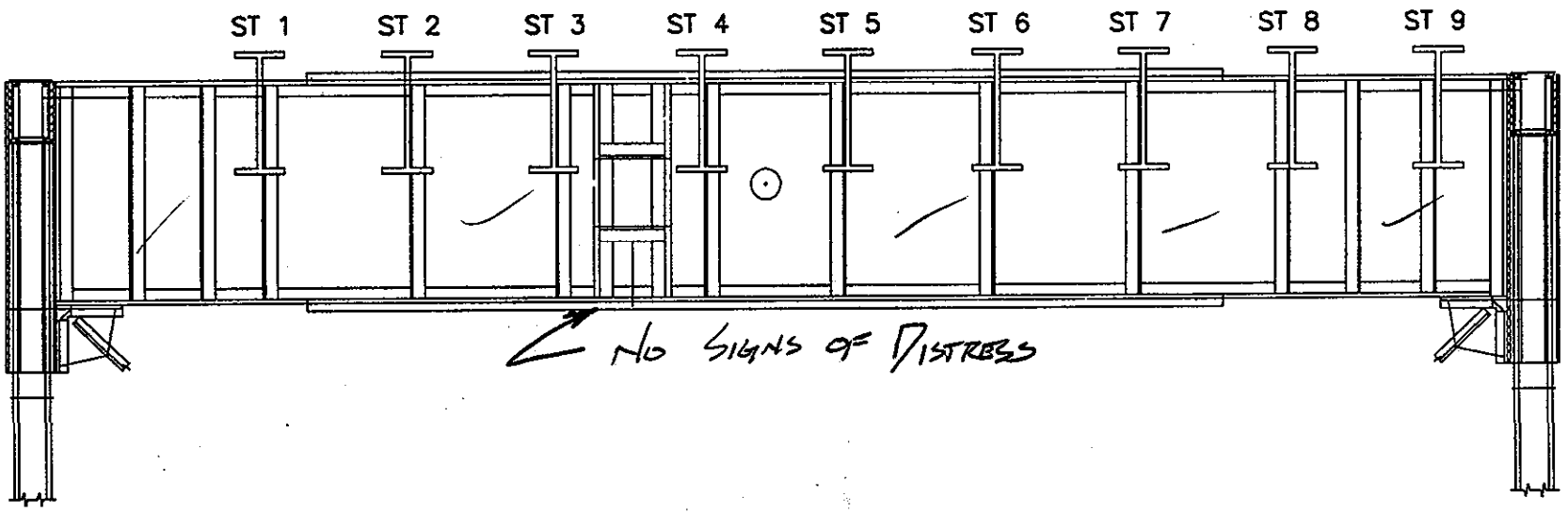

94 227

SPAN 7
FLOORBEAM 1 S ELEV.

NOTES:

FLOORBEAM ELEVATION

DEPARTMENT OF THE ARMY
NEW ENGLAND DISTRICT CORPS OF ENGINEERS

BOURNE HIGHWAY BRIDGE
ROUTINE INSPECTION

NOTES BY: LICHTENSTEIN
CONSULTING ENGINEERS

JOB #1986 | DATE: 7/21/98
CREW: SD, WW | SHEET 5 OF 10

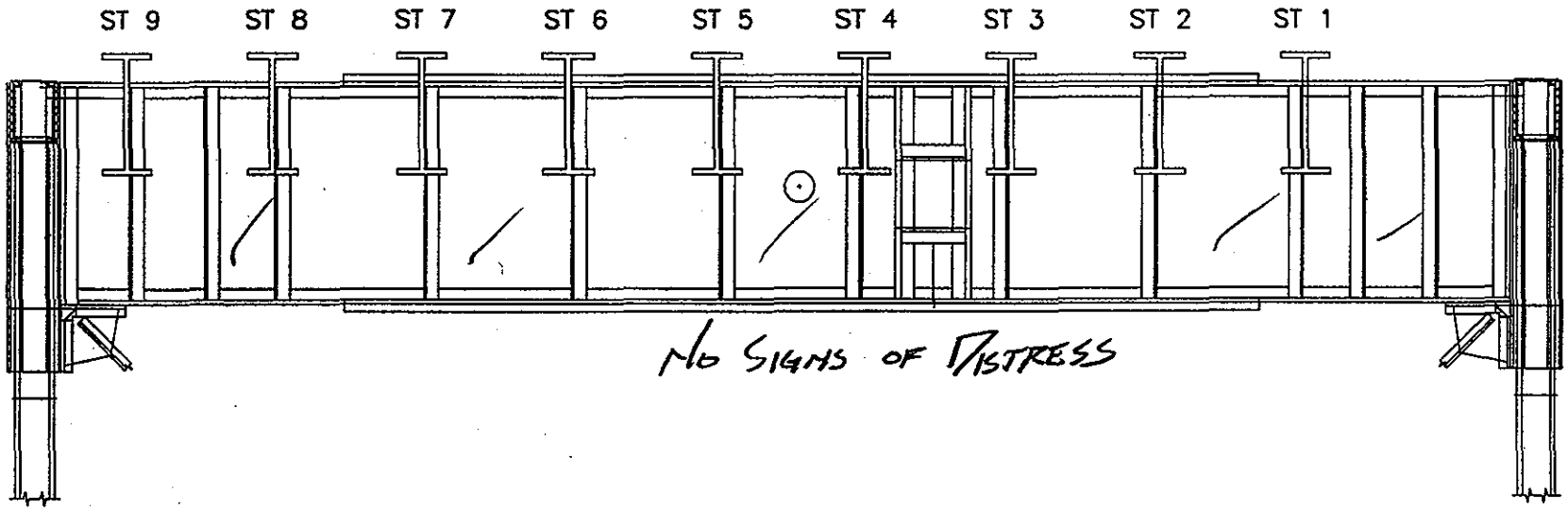

47
227

SPAN 7
FLOORBEAM 2 N ELEV.

NOTES:

FLOORBEAM ELEVATION

DEPARTMENT OF THE ARMY
NEW ENGLAND DISTRICT CORPS OF ENGINEERS

BOURNE HIGHWAY BRIDGE
ROUTINE INSPECTION

NOTES BY: LICHTENSTEIN
CONSULTING ENGINEERS

JOB #1986 | DATE: 7/21/98
CREW: CD | SHEET 6 OF 19

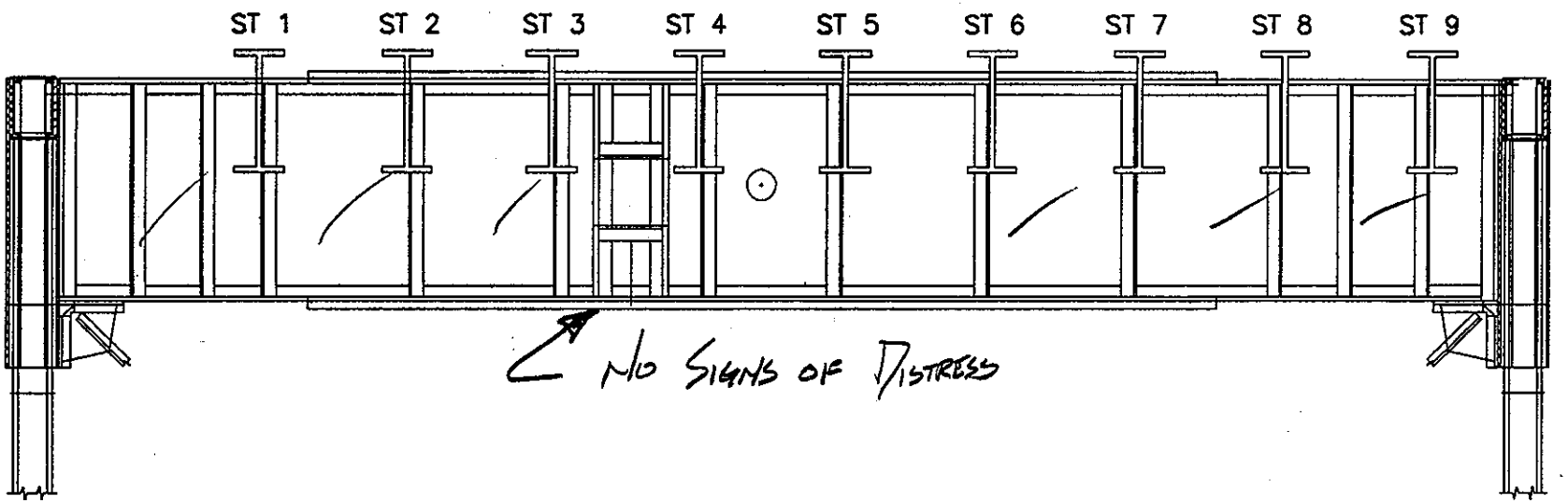

48
227

SPAN 7
FLOORBEAM 2 S ELEV.

NOTES:

FLOORBEAM ELEVATION

DEPARTMENT OF THE ARMY
NEW ENGLAND DISTRICT CORPS OF ENGINEERS

BOURNE HIGHWAY BRIDGE
ROUTINE INSPECTION

NOTES BY: LICHTENSTEIN
CONSULTING ENGINEERS

JOB #1986 | DATE: 7/21/98
CREW: SD, WW | SHEET 7 OF 10

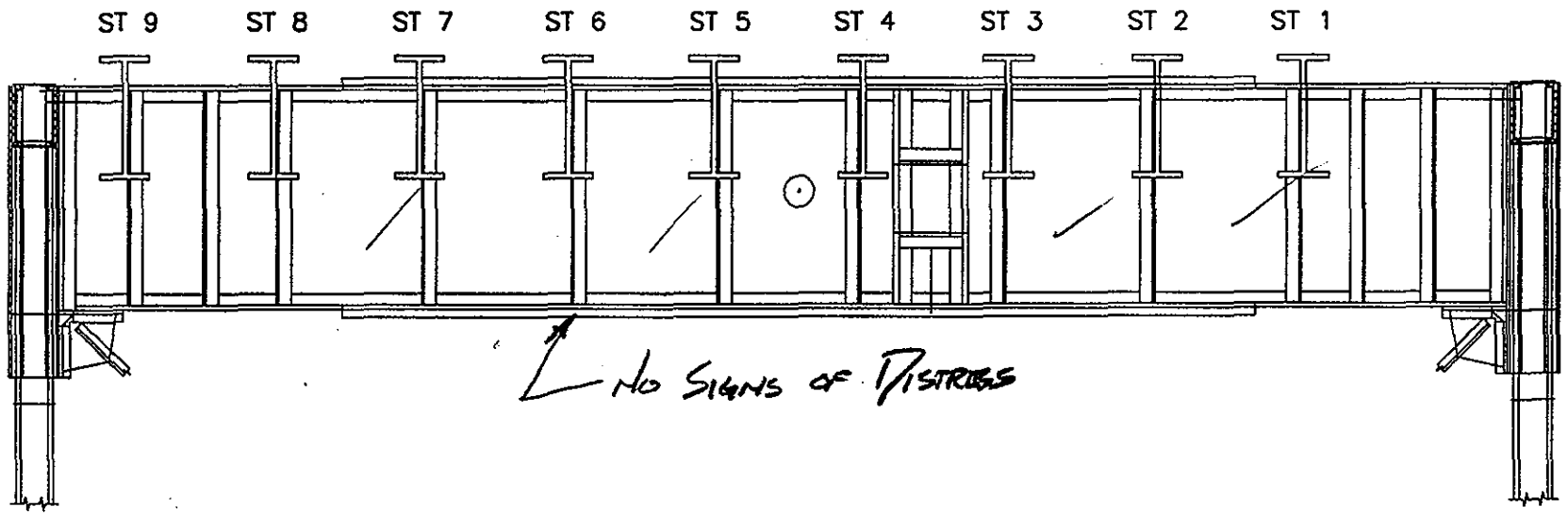

(44 227)

SPAN 7
FLOORBEAM 3 N ELEV.

NOTES:

FLOORBEAM ELEVATION

DEPARTMENT OF THE ARMY
NEW ENGLAND DISTRICT CORPS OF ENGINEERS

BOURNE HIGHWAY BRIDGE
ROUTINE INSPECTION

NOTES BY: LICHTENSTEIN
CONSULTING ENGINEERS

JOB #1986 | DATE: 7/21/98
CREW: SD, [illegible] | SHEET 8 OF 19

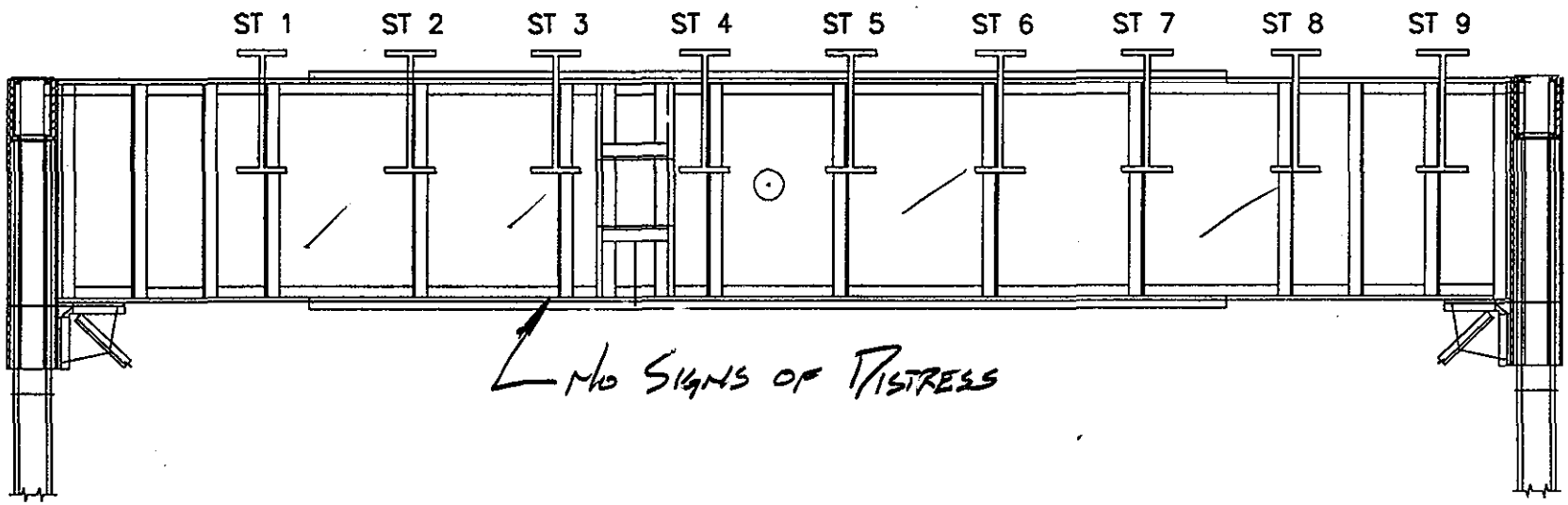

58
227

SPAN 7
FLOORBEAM 3 S ELEV.

NOTES:

FLOORBEAM ELEVATION

DEPARTMENT OF THE ARMY
NEW ENGLAND DISTRICT CORPS OF ENGINEERS

BOURNE HIGHWAY BRIDGE
ROUTINE INSPECTION

NOTES BY: LICHTENSTEIN
CONSULTING ENGINEERS

JOB #1986 | DATE: 7/21/98
CREW: SD, WW | SHEET 9 OF 10

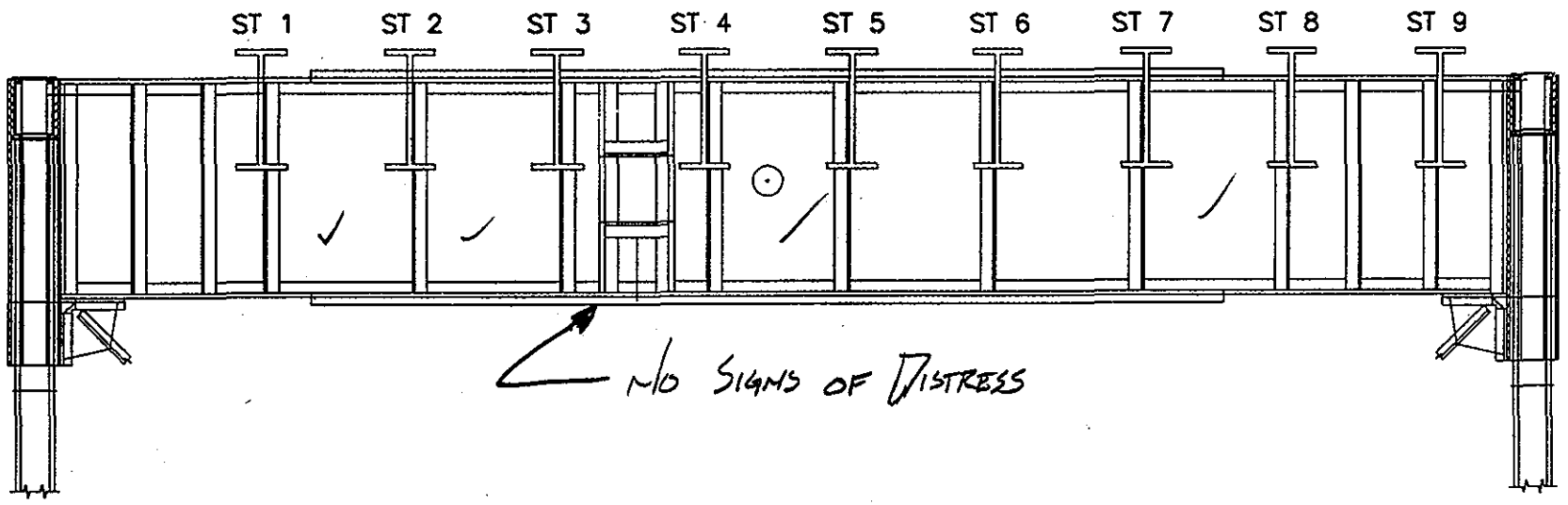

SPAN 7
FLOORBEAM 4 S ELEV.

NOTES:

FLOORBEAM ELEVATION

DEPARTMENT OF THE ARMY
NEW ENGLAND DISTRICT CORPS OF ENGINEERS

BOURNE HIGHWAY BRIDGE
ROUTINE INSPECTION

NOTES BY: LICHTENSTEIN
CONSULTING ENGINEERS

JOB #1986 | DATE: 7/21/98
CREW: SD, [illegible] | SHEET 10 OF [illegible]

51
227

STRINGER CONDITIONS

SPAN	EXT. SIDE	BAY	CONDITION
7	E (STR 9)	L4LS	3/16" PITT. x F.W. OF UNDERSIDE OF E. TOP ∠ BB-9
7	E (STR 9)	L4L2	1/8" PITT. x 6" H. ON E. FACE OF WEB JUST BELOW WEB COPE AT FB 1

52
227

NOTES:

SPAN 7 : FLOOR SYSTEM

DEPARTMENT OF THE ARMY
NEW ENGLAND DISTRICT CORPS OF ENGINEERS

BOURNE HIGHWAY BRIDGE
ROUTINE INSPECTION

NOTES BY: LICHTENSTEIN CONSULTING ENGINEERS

JOB #1986 | DATE: 7/22/98

CREW: FP, RWJ | SHEET 2 OF 4

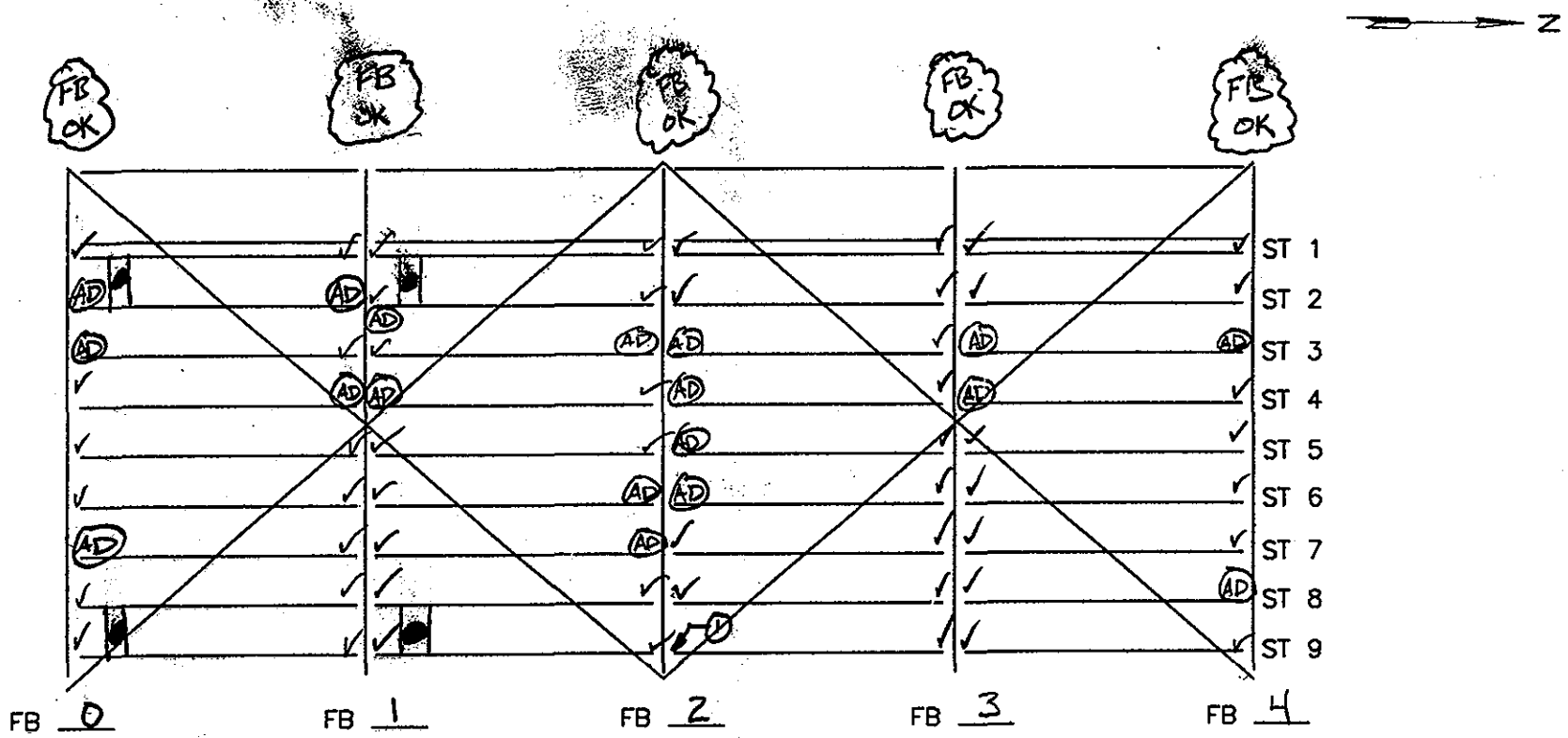

• LT RUST ON DRAIN BRACKETS TYP

SPAN 5

NOTES: ISOLATED AREAS OF 1/8" PITTING ON STR FLANGE EDGES →

① 1/8" LOSS x 2" HIGH ON W. SIDE OF WEB

FLOOR SYSTEM

DEPARTMENT OF THE ARMY
NEW ENGLAND DISTRICT CORPS OF ENGINEERS

BOURNE HIGHWAY BRIDGE
ROUTINE INSPECTION

NOTES BY: LICHTENSTEIN CONSULTING ENGINEERS

JOB #1986 | DATE: 7/22/98

CREW: WW, SD | SHEET 4 OF 12

L22 53 227

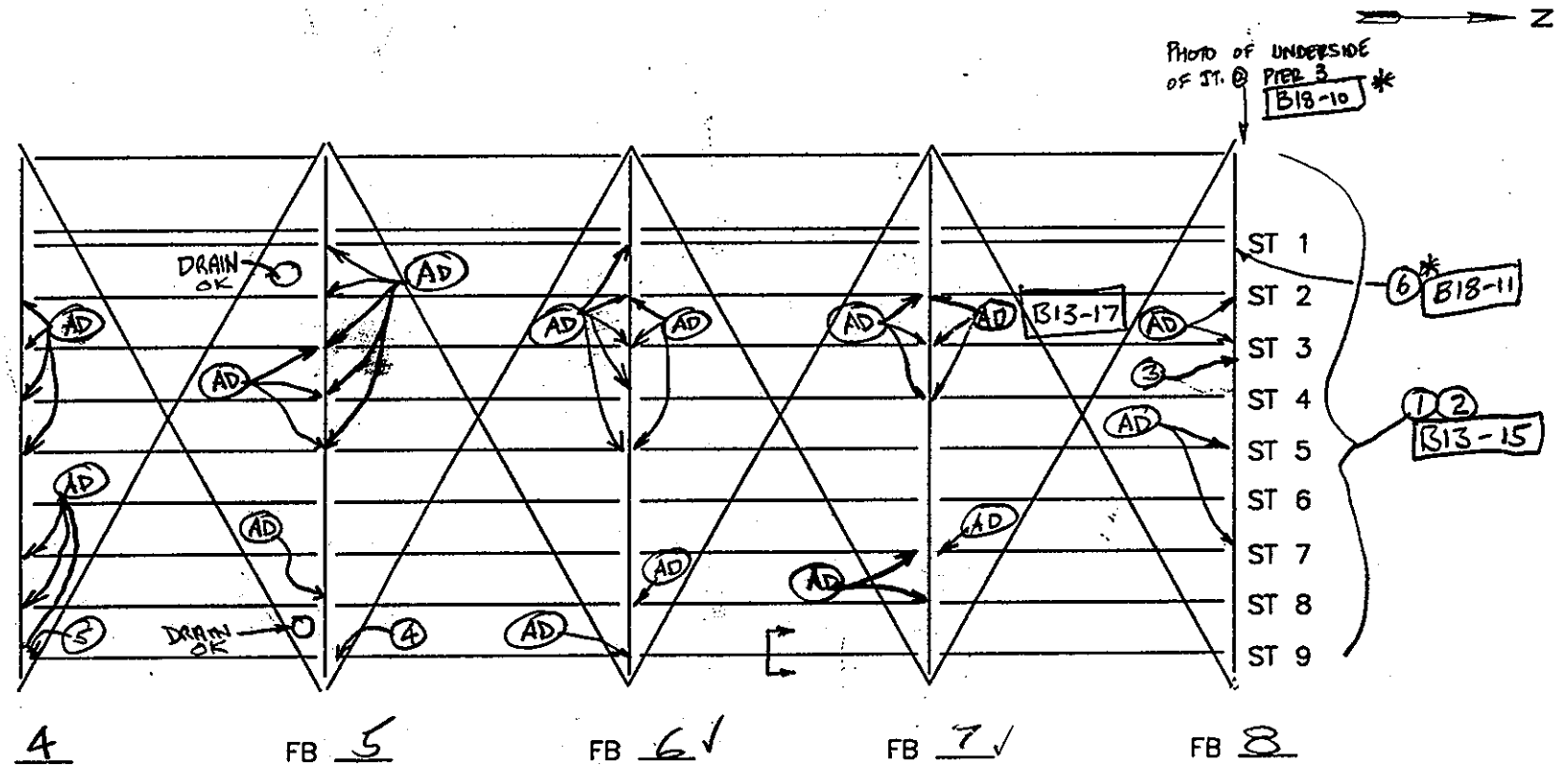

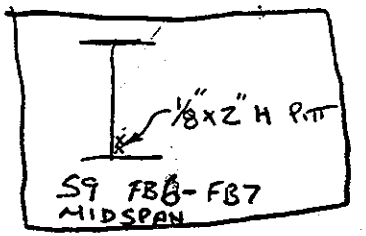

SPAN 5

NOTES:
1. FLAME CUT WELDED TROUGH – FULL LENGTH F.B. WEB
2. MED TO HVY RUST – TOP OF BOTT. FE FULL LENGTH FB8
3. LADDER BRACKET WELDED TO FB – LOWER HALF OF WEB
4. W. FACE S9 WEB PITTING 1/8" x 6" H @ CONN.
5. W. FACE S9 WEB PITTING 1/4" x 3" H @ CONN.
6. * UPTO 1/4" PITT x 3" W. & FULL HT. OF N. FACE OF FB WEB

*FP, EL 8/19/98

FLOOR SYSTEM

DEPARTMENT OF THE ARMY
NEW ENGLAND DISTRICT CORPS OF ENGINEERS

BOURNE HIGHWAY BRIDGE
ROUTINE INSPECTION

NOTES BY: LICHTENSTEIN CONSULTING ENGINEERS

H²

JOB #1986	DATE: 7/22/98
CREW: PWN FP	SHEET 3 OF 4

54 227

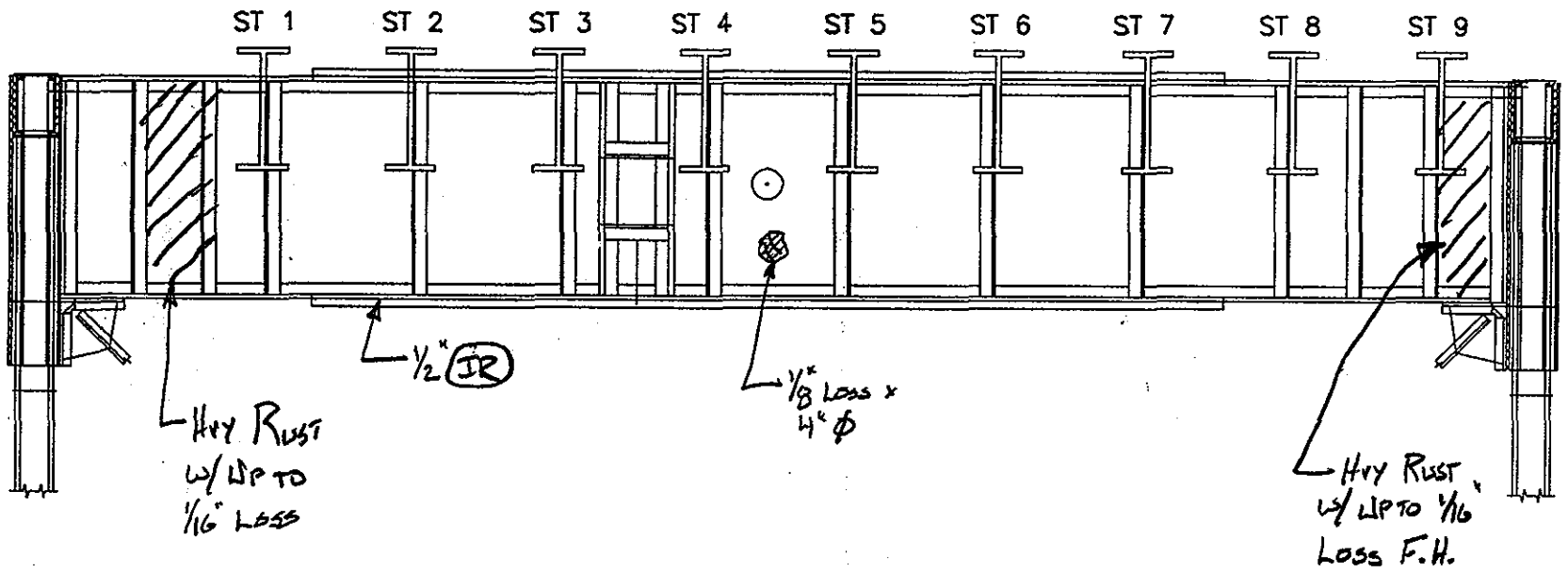

227 55

SPAN 5
FLOORBEAM D S ELEV.

NOTES:

FLOORBEAM ELEVATION

DEPARTMENT OF THE ARMY
NEW ENGLAND DISTRICT CORPS OF ENGINEERS

BOURNE HIGHWAY BRIDGE
ROUTINE INSPECTION

NOTES BY: LICHTENSTEIN CONSULTING ENGINEERS

JOB #1986 | DATE: 7/22/98
CREW: [illegible] | SHEET 5 OF 12

EXTERIOR STRINGER CONDITIONS

SPAN	EXT. SIDE	BAY	CONDITION
5	W (STR 1)	L4-L5	(AD) AT FB 5 CONN.

56
227

NOTES:

SPAN 5: FLOOR SYSTEM

DEPARTMENT OF THE ARMY
NEW ENGLAND DISTRICT CORPS OF ENGINEERS

BOURNE HIGHWAY BRIDGE
ROUTINE INSPECTION

NOTES BY: LICHTENSTEIN
CONSULTING ENGINEERS

JOB #1986 | DATE: 7/21/98

CREW: FP, PWN | SHEET 4 OF 5

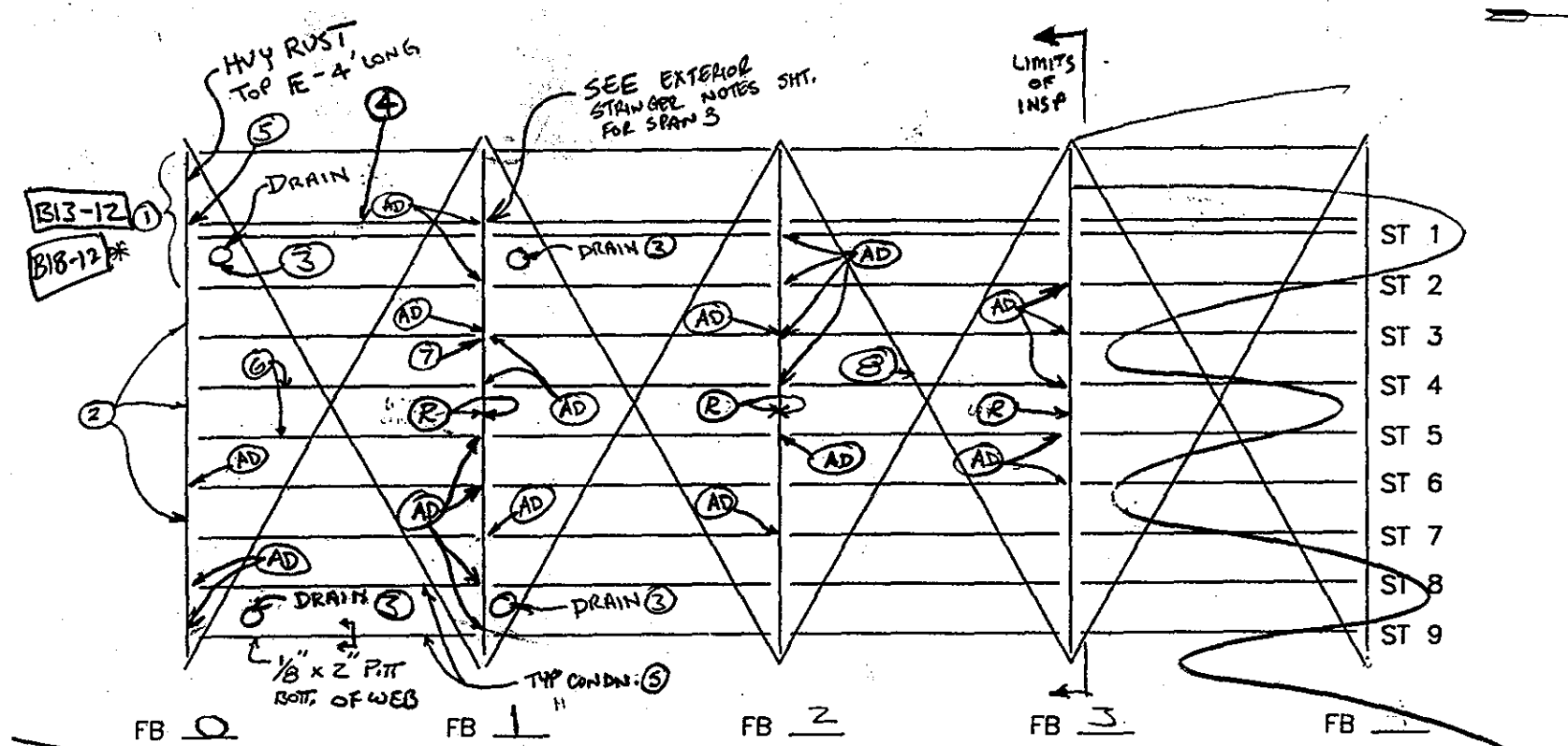

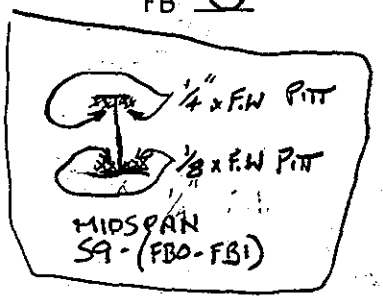

SPAN 3

NOTES:
1. HVY. RUST ON SOUTH SIDE OF FB0 FROM FASCIA TO S2
2. FLAME CUT TROUGH WELD FULL LENGTH OF FLOOR BEAM
3. DRAIN PIPE SUPPORT MEMBERS & DECK PAN — HVY RUST
4. SIDEWALK STRINGER — MID SPAN — 1/4" x 3" PITT, UNDERSIDE BOTT FE, W.E
5. UP TO 1/2" (R) BTWN S1 WEB & OSL STIFF. ∠
6. 2" LONG WELD ON 2" x 4" PL TO TOP OF BOTT. FE @ MIDSPAN B13-13
7. LOOSE CATWALK RAIL BOLT w/ (AD)
8. VIBRATION w/ (AD) BTWN CATWALK RAIL & BRACING B13-14

FLOOR SYSTEM	
DEPARTMENT OF THE ARMY NEW ENGLAND DISTRICT CORPS OF ENGINEERS	
BOURNE HIGHWAY BRIDGE ROUTINE INSPECTION	
NOTES BY: LICHTENSTEIN CONSULTING ENGINEERS	
JOB #1986	DATE: 7/22/98
CREW:	SHEET 4 OF 4

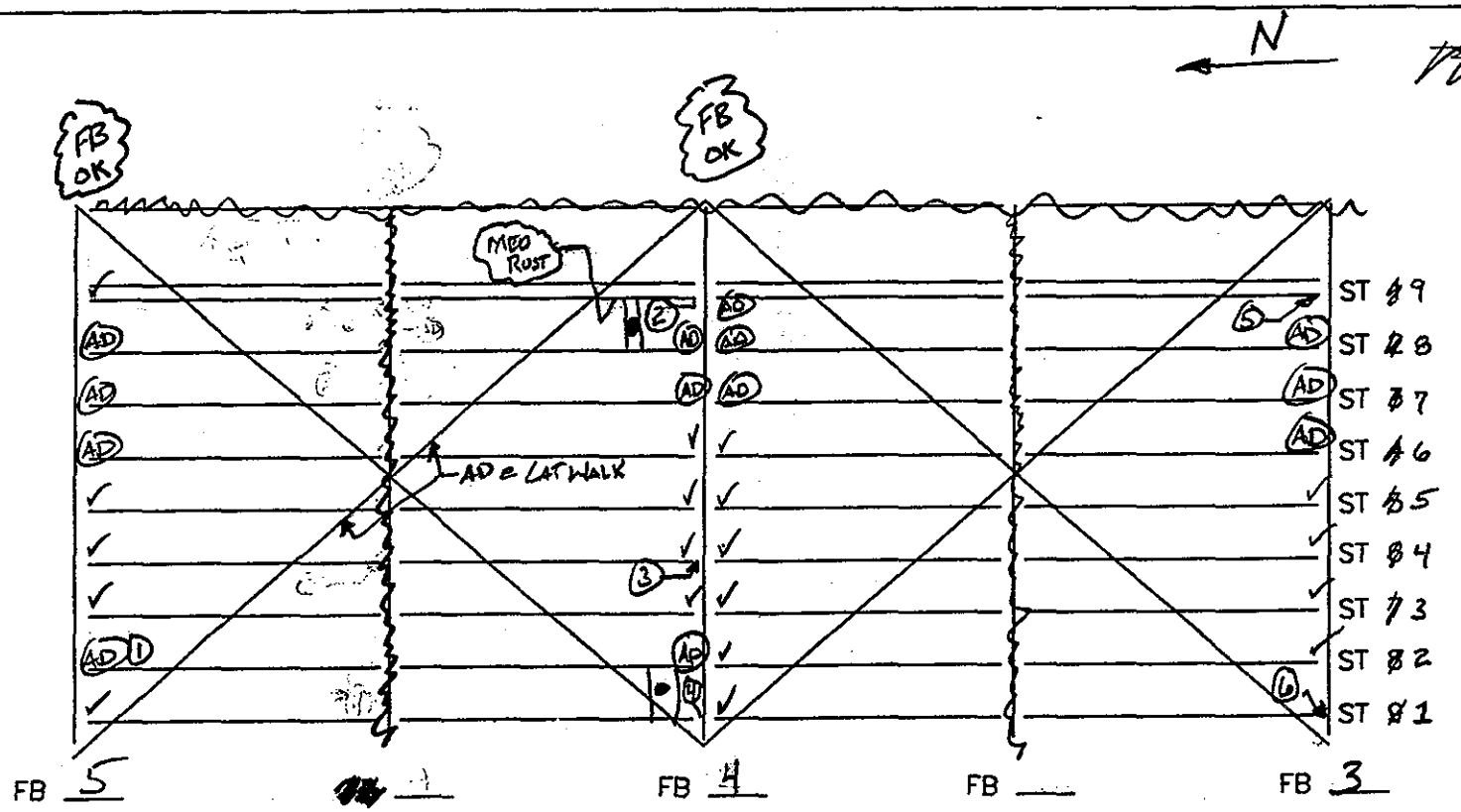

TYP. CONDN (R) ON FBs.

SPAN 3

NOTES:

1. 1/8" x 1" HIGH ON W. WEB @ FB CONN.
2. 1/8" LOSS x 2" HIGH
3. FLAME CUT BOT FE @ FB CONN.
4. 1/8" LOSS x 3" HIGH ON W. WEB @ F.B CONN
5. 1/8" LOSS x 2" HIGH ON E. WEB @ F.B CONN
6. 1/8" LOSS x 1" HIGH ON W. WEB @ F.B CONN

FLOOR SYSTEM

DEPARTMENT OF THE ARMY
NEW ENGLAND DISTRICT CORPS OF ENGINEERS

BOURNE HIGHWAY BRIDGE
ROUTINE INSPECTION

NOTES BY: LICHTENSTEIN CONSULTING ENGINEERS

JOB #1986 | DATE: 7/22/98

CREW: SD, WW | SHEET 7 OF 12

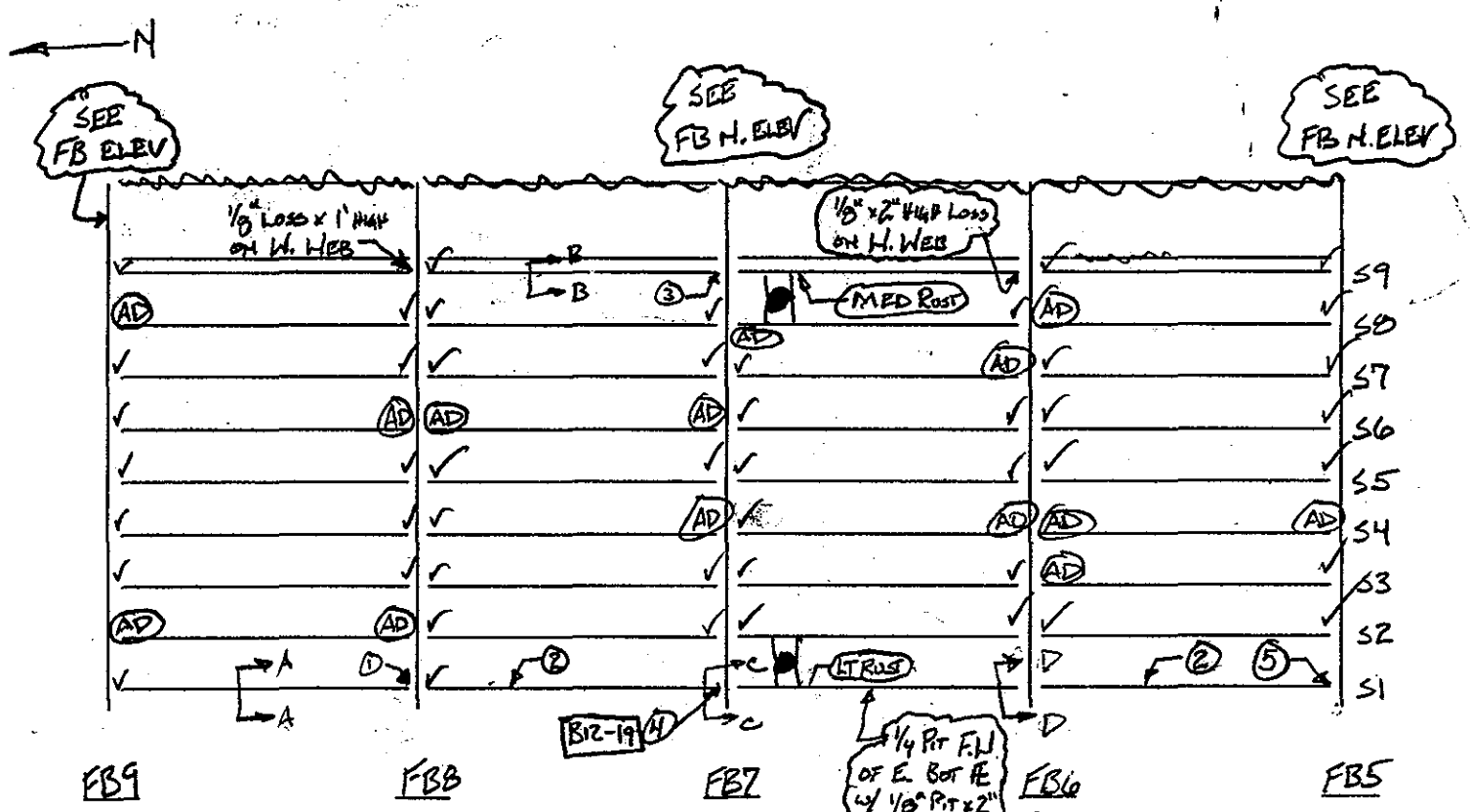

TYP. CONDN. @ ALL FBs.

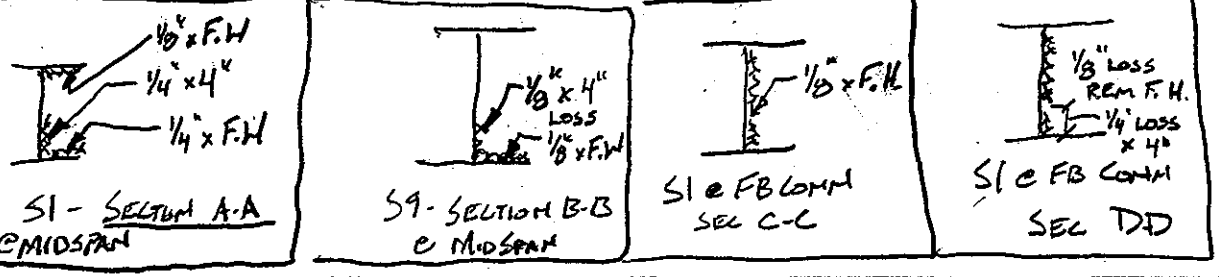

NOTES:

1. 1/8" LOSS x 2" HIGH @ FB COMM. (1/4" LOSS F.W OF PL)
2. MINOR SECTION LOSS - NOT WORST CASE
3. 1/8" x 2" HIGH LOSS ON STR WEB @ COMM
4. STIFF PL WELDED TO FB B12-19
5. 1/8" LOSS x 5" HIGH ON E WEB @ FB COMM. w/ WELDED STIFF PL

SPAN 3

FLOOR SYSTEM

DEPARTMENT OF THE ARMY
NEW ENGLAND DISTRICT CORPS OF ENGINEERS

BOURNE HIGHWAY BRIDGE
ROUTINE INSPECTION

NOTES BY: LICHTENSTEIN CONSULTING ENGINEERS

JOB #1986 | DATE: 7/22/98

CREW: SD, WW | SHEET 6 OF 12

59
227

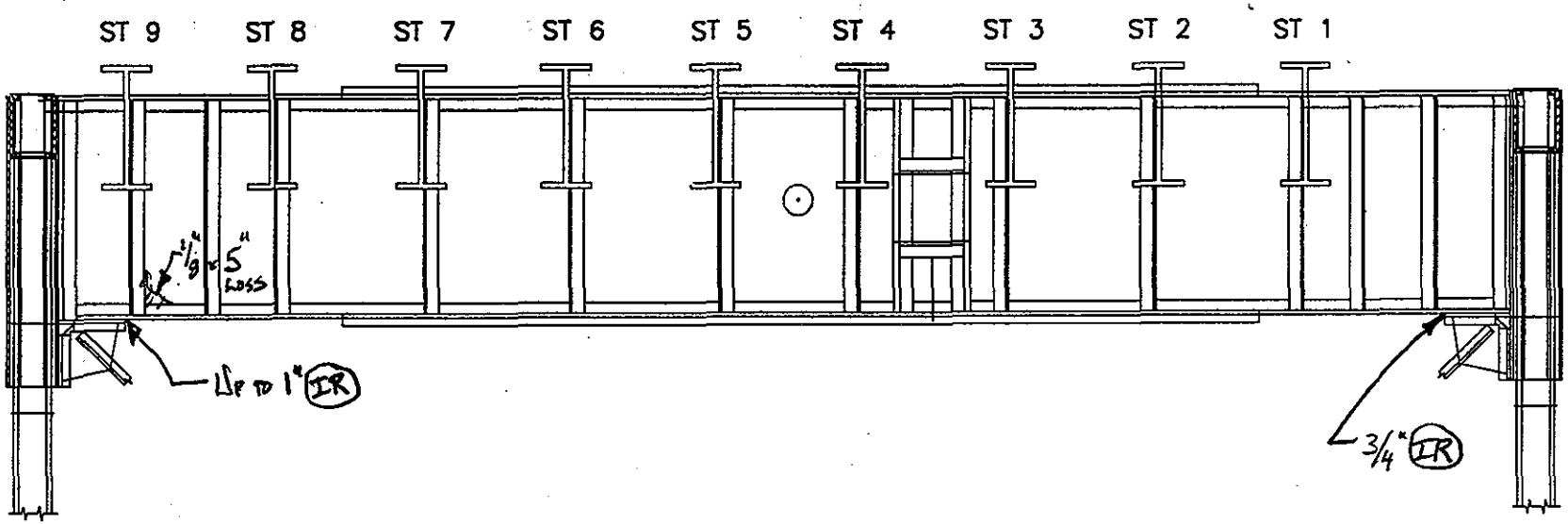

60
227

SPAN 3
FLOORBEAM 5 N ELEV.

NOTES:

FLOORBEAM ELEVATION

DEPARTMENT OF THE ARMY
NEW ENGLAND DISTRICT CORPS OF ENGINEERS

BOURNE HIGHWAY BRIDGE
ROUTINE INSPECTION

NOTES BY: LICHTENSTEIN
CONSULTING ENGINEERS

JOB #1986	DATE: 7/22/98
CREW: SD, WW	SHEET 12 OF 12

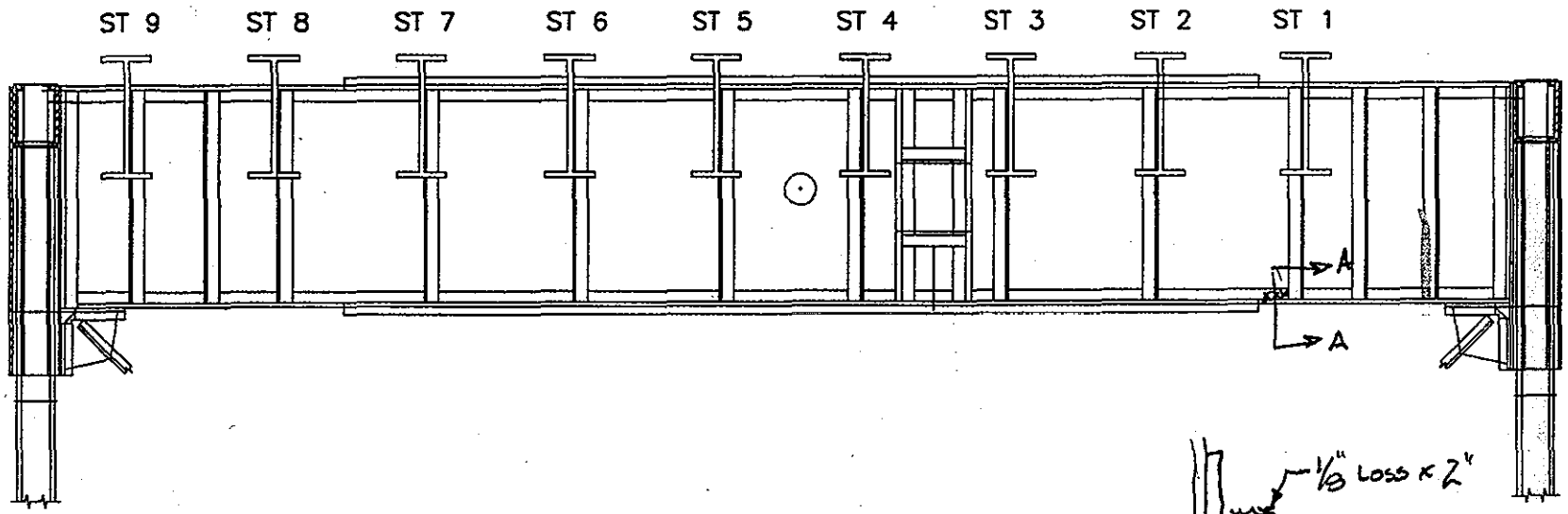

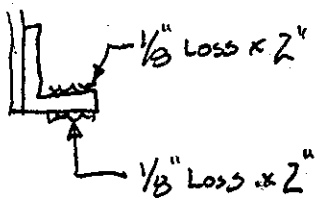

Section A-A

SPAN 3

FLOORBEAM 7 N ELEV.

NOTES:

FLOORBEAM ELEVATION

DEPARTMENT OF THE ARMY
NEW ENGLAND DISTRICT CORPS OF ENGINEERS

BOURNE HIGHWAY BRIDGE
ROUTINE INSPECTION

NOTES BY: LICHTENSTEIN
CONSULTING ENGINEERS

JOB #1986 DATE: 7/22/98

CREW: [illegible] SHEET 11 OF 12

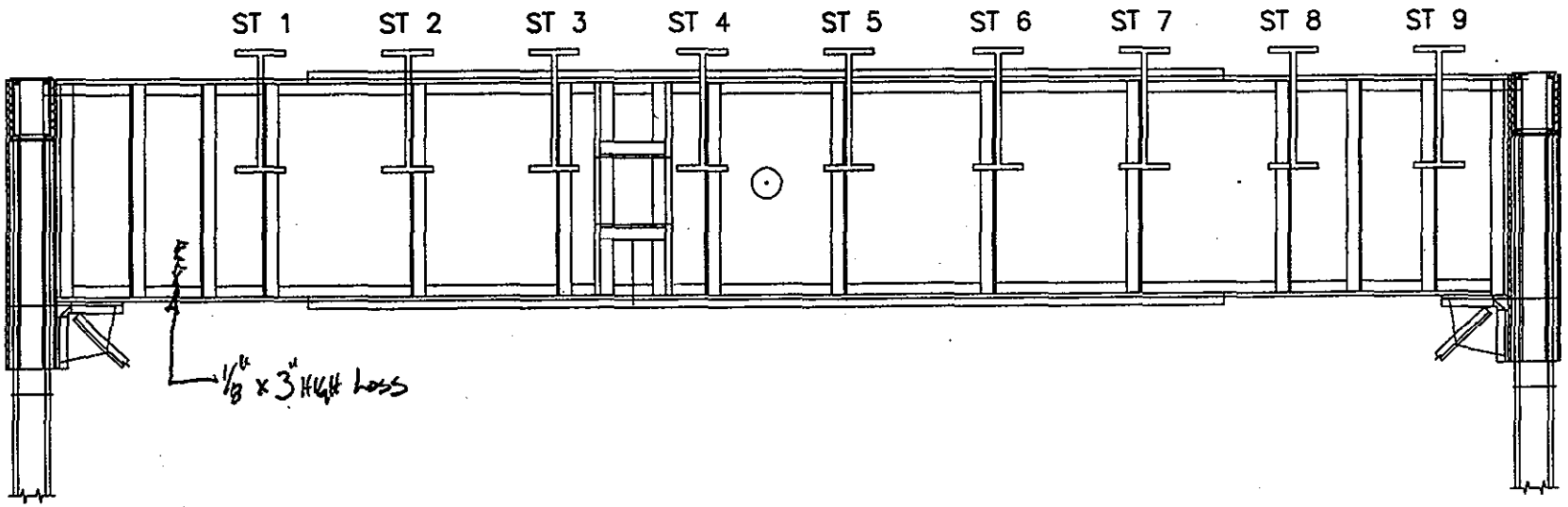

222
29

SPAN 3
FLOORBEAM 8 S ELEV.

NOTES:

FLOORBEAM ELEVATION

DEPARTMENT OF THE ARMY
NEW ENGLAND DISTRICT CORPS OF ENGINEERS

BOURNE HIGHWAY BRIDGE
ROUTINE INSPECTION

NOTES BY: LICHTENSTEIN CONSULTING ENGINEERS

JOB #1986 | DATE: 7/22/98
CREW: WF, SD | SHEET 10 OF 12

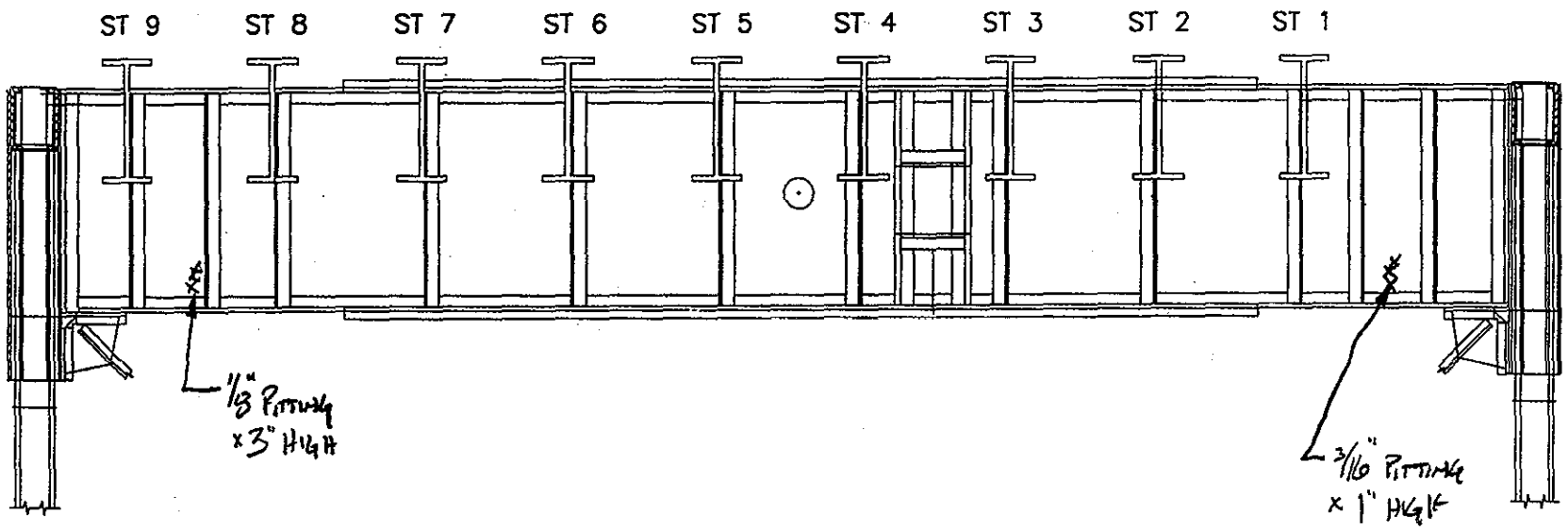

SPAN 3
FLOORBEAM 9 N ELEV.

NOTES:

FLOORBEAM ELEVATION

DEPARTMENT OF THE ARMY
NEW ENGLAND DISTRICT CORPS OF ENGINEERS

BOURNE HIGHWAY BRIDGE
ROUTINE INSPECTION

NOTES BY: LICHTENSTEIN CONSULTING ENGINEERS

JOB #1986 DATE: 7/22/98

CREW: HWG SHEET 8 OF 12

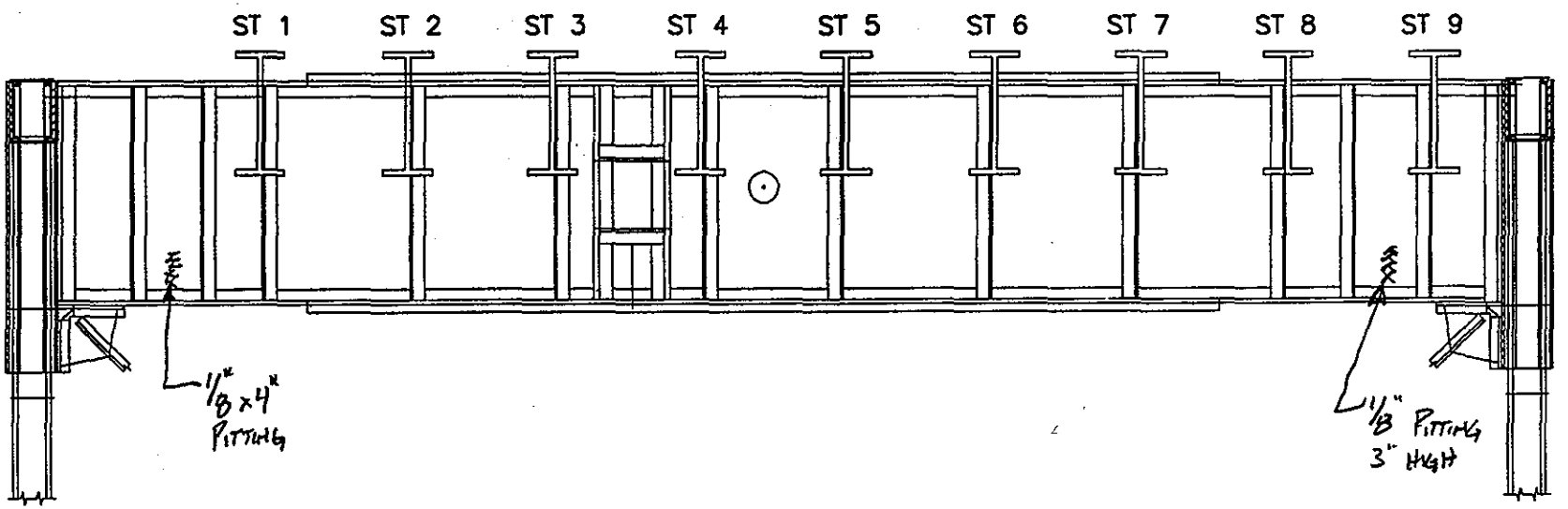

SPAN 3
FLOORBEAM 9 S ELEV.

NOTES:

FLOORBEAM ELEVATION

DEPARTMENT OF THE ARMY
NEW ENGLAND DISTRICT CORPS OF ENGINEERS

BOURNE HIGHWAY BRIDGE
ROUTINE INSPECTION

NOTES BY: LICHTENSTEIN CONSULTING ENGINEERS

JOB #1986 DATE: 7/22/98

CREW: WH, SD SHEET 9 OF 12

STRINGER NOTES:

SPAN	EXT. STR.	BAY	CONDITION
3	W (STR#1)	L0 L1	UNDERSIDE OF TOP ∠ W HALF, 1/16" PITT. FW. @ MIDSPAN (X) AT CONN TO FB 1
3	W (STR#1)	L1L2	@ MIDSPAN, UNDERSIDE OF TOP ∠, W HALF, 1/8" PITT. 4" W. @ FB1, BOT STRINGER ∠ IS WARPED (BENT UP) @ FB1 STIFF ∠, WELDED ∠ ON O.S.L. (CONO (W))
3	W (STR#1)	L4L5	1/8" PITT FW UNDERSIDE OF W. 1/2 OF TOP ∠
3	W (STR#1)	L6L7	——— " ——— + (X) @ L7
3	W (STR#1)	L5L6	1/4" PITT. 3" W UNDERSIDE OF W. 1/2 OF TOP ∠

99 227

EL
NOTES:

SPAN 3: FLOOR SYSTEM

DEPARTMENT OF THE ARMY
NEW ENGLAND DISTRICT CORPS OF ENGINEERS

BOURNE HIGHWAY BRIDGE
ROUTINE INSPECTION

NOTES BY: LICHTENSTEIN
CONSULTING ENGINEERS

JOB #1986 | DATE: 7/14/98

CREW: CO, PW | SHEET 3 OF 3

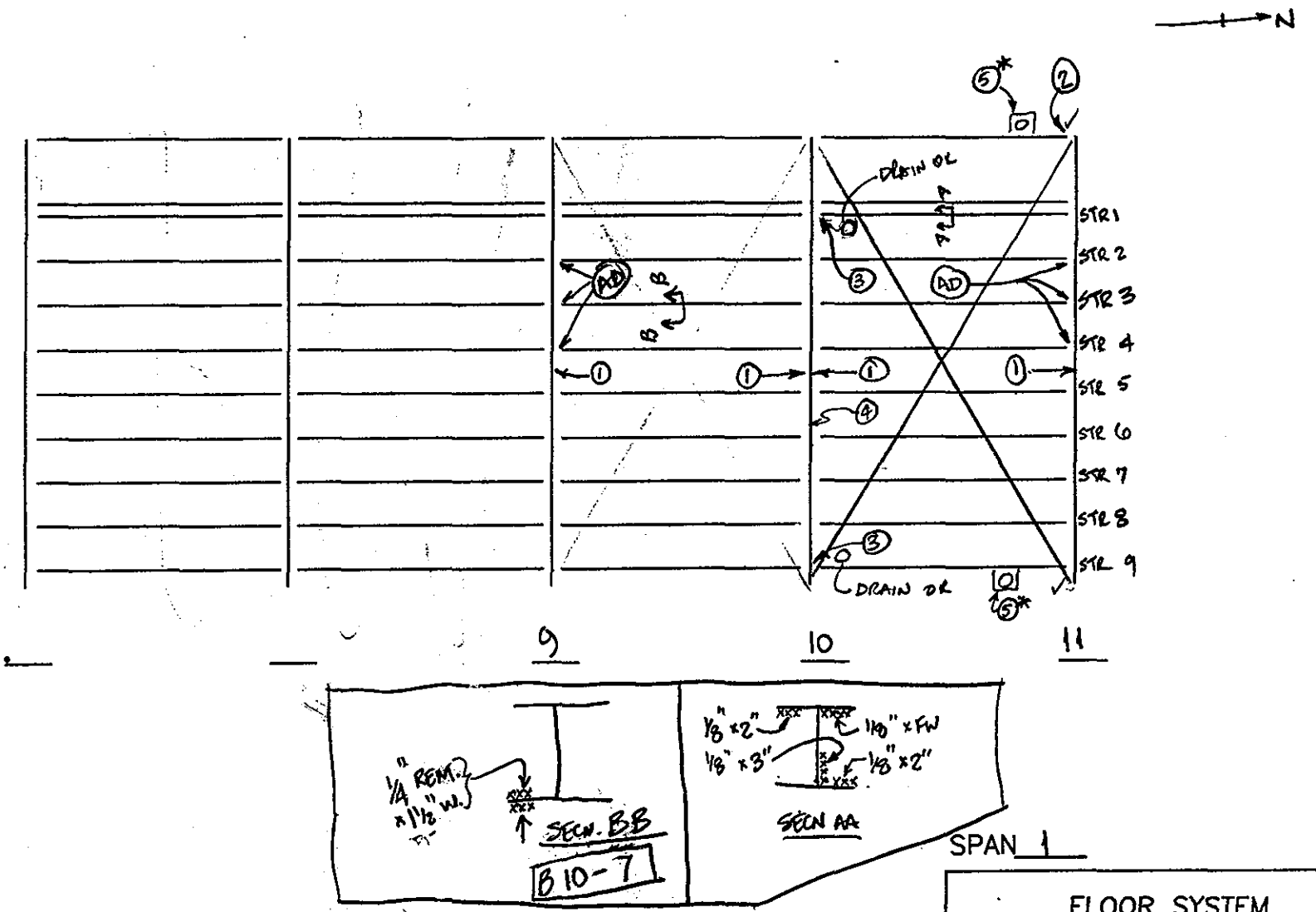

SPAN 1

NOTES:
1. UTILITY PIPE BRACKET SUPPORT WELDED TO FB WEB
2. 1/2" (TR) BET. BOT. ℄ ∡ OF HANGER SUPP BRACKET AT TOP OF FB, AT CUTOUT FOR CABLE
3. HR AT STR TO FB CONN. (W/ UPTO 1/8" PITT. ON WEB UPTO 1/2 HT. OF STR.)*
4. FLAME CUT WELDED ℄ REMAINING (DRAINAGE TROUGH) ALONG FULL LENGTH OF FB WEB ABOVE BOT ℄ ∡.
5.* RED NAVIGATION LIGHT (CURRENTLY LIT), GOOD CONDN.

* FP, EL 8/19/98

FLOOR SYSTEM

DEPARTMENT OF THE ARMY
NEW ENGLAND DISTRICT CORPS OF ENGINEERS

BOURNE HIGHWAY BRIDGE
ROUTINE INSPECTION

NOTES BY: LICHTENSTEIN
CONSULTING ENGINEERS

JOB #1986 | DATE: 7/27/98
CREW: FP, W², PWN, SD | SHEET 3 OF 14

TYP. CONDN: 1/2" (IR) BET HORIZ. GUSSET PL & BRACING X's TOP

✓ → HANGER OK

Z

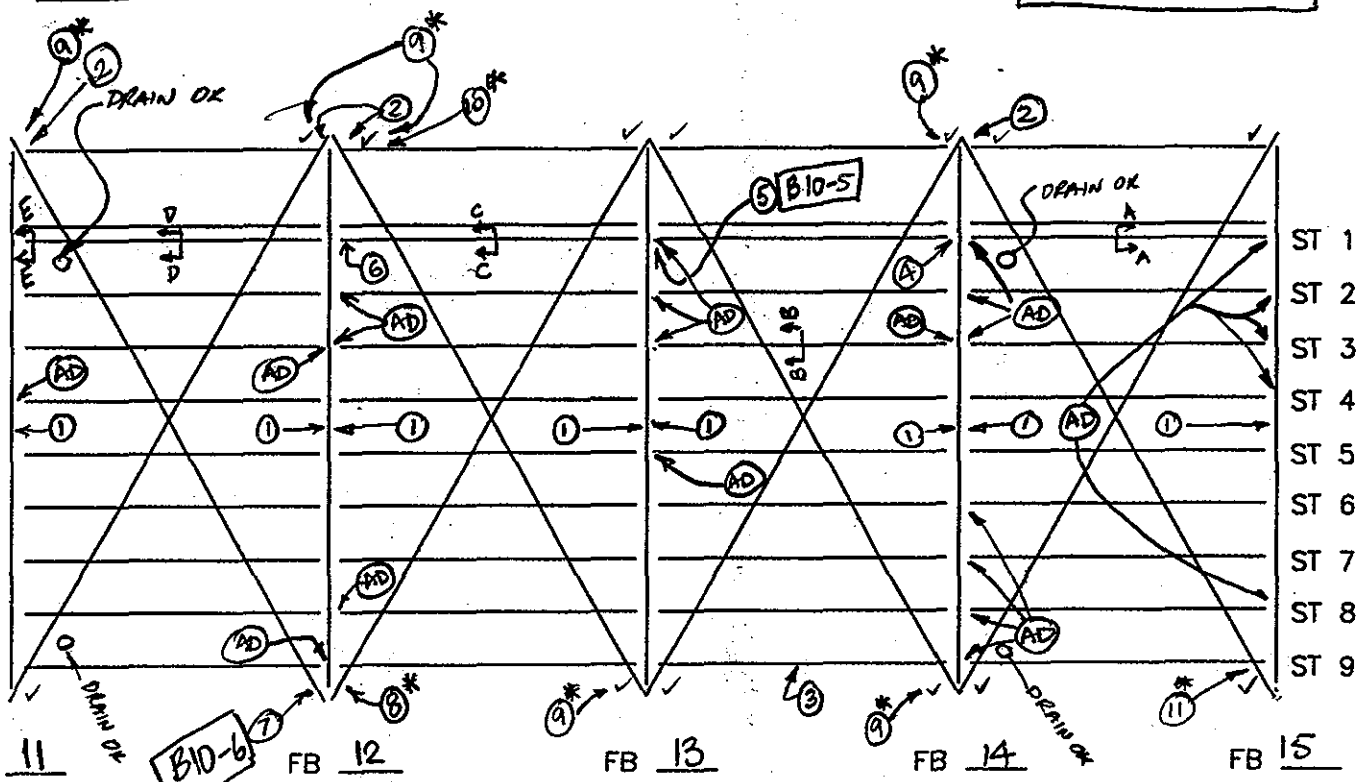

(11)* 100% LOSS ON BOT RIVET HEAD @ BOT. OF CONN ∡ BEHIND CABLE

67 221

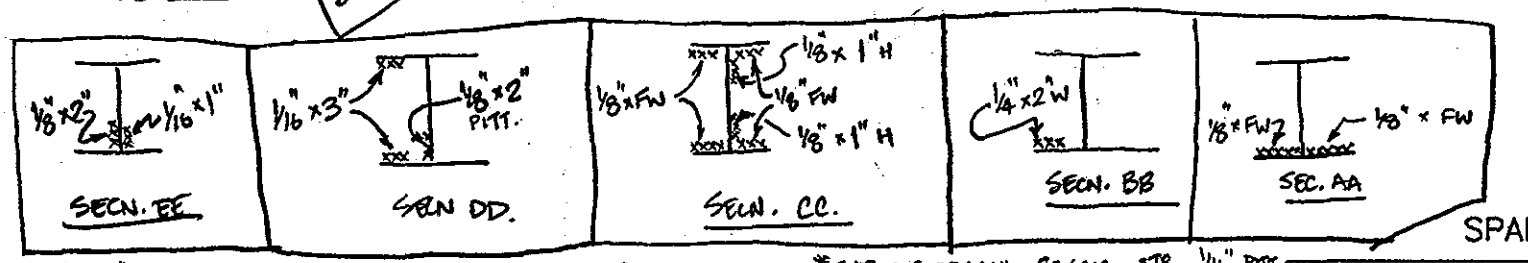

SPAN 1

(10)* 1/8" x 7"H. GAP BETWEEN STRANDS ON HANGER CABLE

*TYP.: SIDEWALK FASCIA STR., 1/16" PITT. FULL HT., EXT. WEB ALONG EDGES OF RAILING CONN.

NOTES:
1. UTILITY PIPE SUPPORT BRACKET WELDED TO FB'S WEB
2. 1/2" IR BET BOT. PL & TOP OF HANGER SUPP. BRACKET AT TOP OF FB, AT CUTOUT FOR CABLE
3. PITT. ON STR., BUT NOT WORSE SECN. IN SPAN 1 ∴ NOT CRITICAL.
4. 1/2" (IR) BET. STL WEB & FB CONN ∡
5. 1/4" x 3" H PITT. ON E FACE OF STR WEB
6. 1/4" x 1" H PITT. ON E FACE OF STL WEB
7. FERRO & RUST ON S. CABLE
8. * 1/16" x 6" GAP BETWEEN STRANDS
9. * 100% LOSS OF BOT. RIVET HEAD INT. CONN ∡ OF HANGER BEHIND CABLE ASSEMBLY.

*FP, EL 8/19/98

FLOOR SYSTEM	
DEPARTMENT OF THE ARMY NEW ENGLAND DISTRICT CORPS OF ENGINEERS	
BOURNE HIGHWAY BRIDGE ROUTINE INSPECTION	
NOTES BY: LICHTENSTEIN CONSULTING ENGINEERS (W²)	
JOB #1986	DATE: 7/27/98
CREW: FP, W², IWN, SD	SHEET 2 OF 14

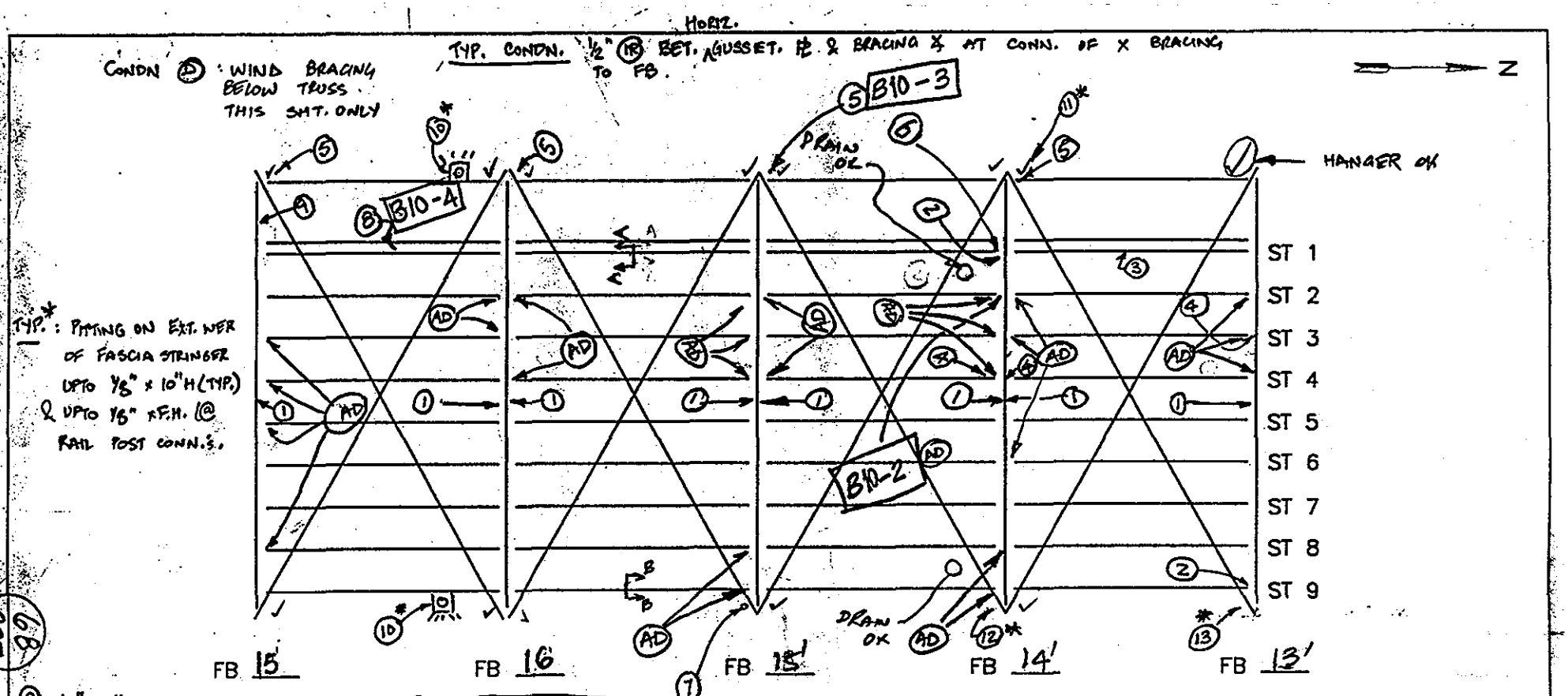

(9) 1/4" x 2"H PITT. ON N. FACE OF FB15 FROM TOP OF BOT PL ∡ & UP.

(10)* GREEN NAVIGATION LIGHT (WORKING)

(11)* 100% LOSS, BOT. 2 RIVET HEADS INSIDE HANGER ASSEMBLY, BEHIND CABLE (UPTO 50% ON 1 RIVET, S. SIDE CABLE)

(12)* UPTO 1/16" GAP x 3" LONG BET. WIRES IN CABLE.

(13)* 2 GAPS 1/16" x 6" L., 8" APART, BETWEEN CABLE WIRES.

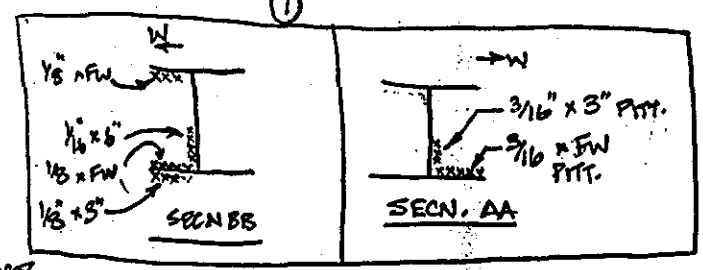

SPAN 1

NOTES:
1. UTILITY PIPE SUPPORT BRACKET WELDED TO FB WEB
2. 1/2" (IR) BET. STR. WEB & STIFF. ∡
3. 1/8" PITT. x FW, WEST HALF OF BOT. HOF T. PL & TOP OF BOT PL & 1/8" x 2"H ON WEB JUST ABOVE BOT. FILLET
4. BOT. OF STR. PL FLAME CUT, E. SIDE OF STR 3 & W SIDE OF STR. 4
5. 1/2" (IR) BET. bot. PL ∡ OF HANGER SUPPORT BRACKET AT TOP OF FB, AT CUTOUT FOR CABLE
6. 1/8" x 2"H PITT. ON W FACE OF WEB.
7. S. CABLE HAS FERROUS RUST, ≈ 3" HIGH
8. 3" SQ. DECK, RUSTED THROUGH PAN & TOP PL OF STR. UNDERSIDE HAS HR (UNDERSIDE OF CONC. DECK VISIBLE)

*FP, EL 8/19/98

FLOOR SYSTEM

DEPARTMENT OF THE ARMY
NEW ENGLAND DISTRICT CORPS OF ENGINEERS

BOURNE HIGHWAY BRIDGE
ROUTINE INSPECTION

NOTES BY: LICHTENSTEIN CONSULTING ENGINEERS

JOB #1986 | DATE: 7/27/98

CREW: FP, W², PWN, SJ | SHEET 1 OF 14

68
227

(8) - 1/8" PITT. x FW TOP OF BOT ∠'s & BOT OF TOP ∠'s
(9) - S. HANGER HAS MINOR DEBRIS ACCUMULATION AROUND CABLE ON TOP OF THE SOCKET.
(10) - 1/8" x 1" H. PITT. AT BOTTOM OF E. FACE OF WEB, 1/8" x 1" WIDE PITT. ON TOP OF E. BOT ∠, 1/8" x 3" W PITT. ON BOT OF W. TOP ∠
(11) - 1/8" DP. x 2" H PITT. ALONG W. FACE OF WEB ABOVE BOT. FILLET

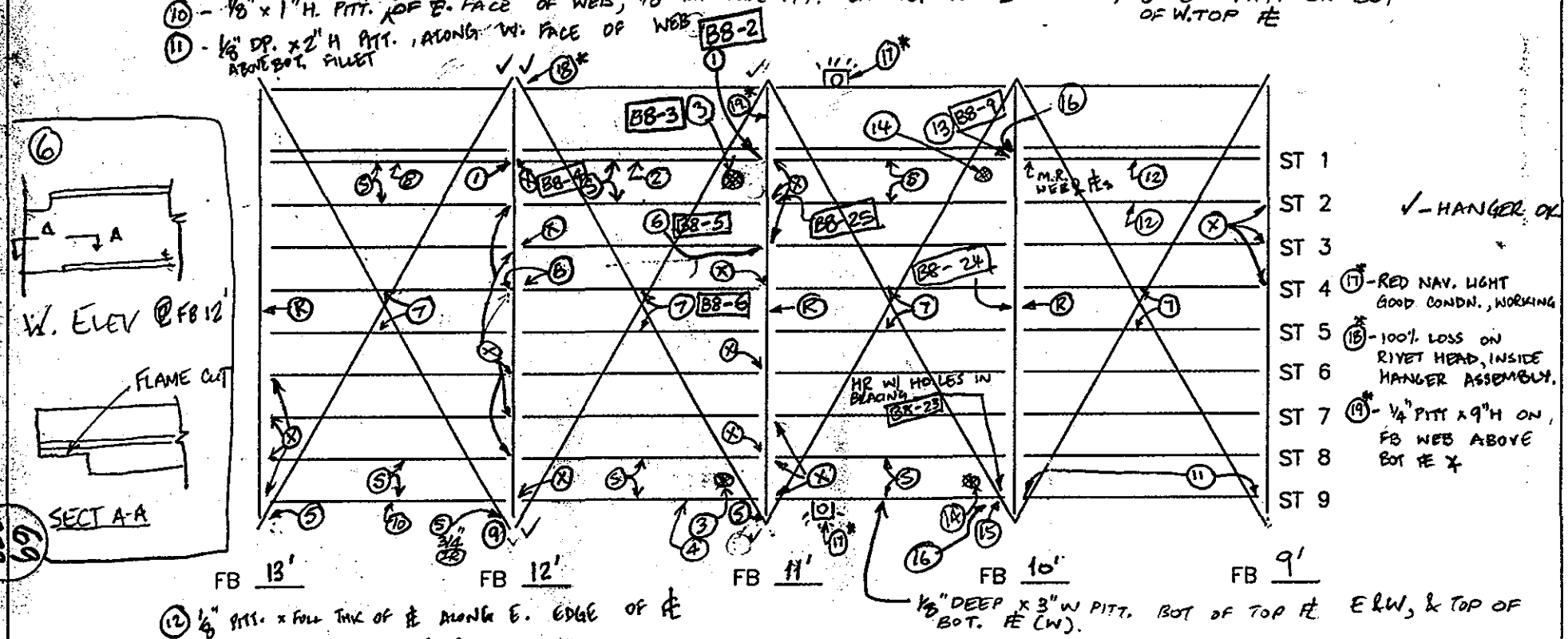

(12) 1/8" PITT. x FULL THK OF ∠ ALONG E. EDGE OF ∠
(13) HR ON ALL SURFACES (E&W) FOR 1' FROM FB 10', 1/16" LOSS x 1/2 HT. OF WEB ON BOTH E & W FACES. 1/8" PITT. x FW OF BOT OF TOP ∠'s & TOP OF W. BOT. ∠
(14) LR IN DECK PAN AROUND DRAIN PIPE
(15) HR. AT STRINGER TO FB CONN, 1/8" x 1.4" H., BOTH FACES OF WEB
(16) HR IN DECK PAN ON OUTSIDE OF EXT. STR. FOR 3' FROM FB

TYP.* PITTING ON SIDEWALK, FASCIA CHANNEL EXT. WEB 1/8" x 3" H (TYP), 1/8" x F.H. @ EDGES OF RAIL CONNECTIONS

SPAN 1

EL

NOTES: (1) (18) UPTO 1" THK. x 6" HIGH BET. STRINGER WEB & STIFF. ∠ * FP, EL 8/18/98
(2) 1/8" DEEP PITT. x FW OF BOT. OF W. TOP ∠, 1/8" x 3" W. ON BOT. OF E. TOP ∠ 1/8" x 3" W ON TOP OF E. & W. BOT. ∠
(3) HR WITH PINHOLES IN DECK PAN @ DRAIN PIPE, HR W/ UPTO 1/16" LOSS ON PIPE SUPPORTS AND E. TOP & BOT ∠'s OF STR 1 & 9
(4) 1/8" PITT. x 3" W, BOT. OF BOTH SIDES OF TOP ∠
(5) 1/2" IR BET GUSSET ∠ & BRACING TOP ∠'s
(6) BOT. ∠ OF STR. FLAME CUT BEYOND STIFF. ∠ (SEE SKETCH)
(7) 2" W x 6 1/2" LONG x 1" THK ∠ WELDED TO TOP OF E. BOT ∠ (STR 4), W. BOT ∠ (STR 5)

FLOOR SYSTEM	
DEPARTMENT OF THE ARMY NEW ENGLAND DISTRICT CORPS OF ENGINEERS	
BOURNE HIGHWAY BRIDGE ROUTINE INSPECTION	
NOTES BY: LICHTENSTEIN CONSULTING ENGINEERS	
JOB #1986	DATE: 7/15/98
CREW: FP, EL	SHEET 1 OF 7

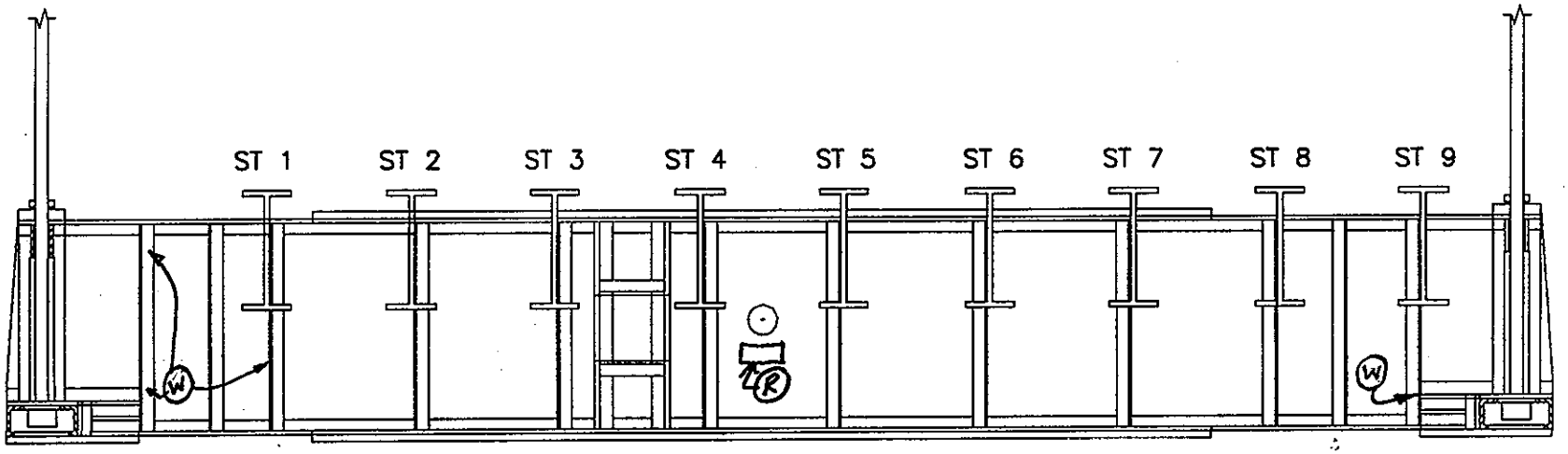

SPAN 1
FLOORBEAM 12' S ELEV.

EL
NOTES:

FLOORBEAM ELEVATION

DEPARTMENT OF THE ARMY
NEW ENGLAND DISTRICT CORPS OF ENGINEERS

BOURNE HIGHWAY BRIDGE
ROUTINE INSPECTION

NOTES BY: LICHTENSTEIN
CONSULTING ENGINEERS

JOB #1986 | DATE: 7/15/98
CREW: FP, EL | SHEET 7 OF 7

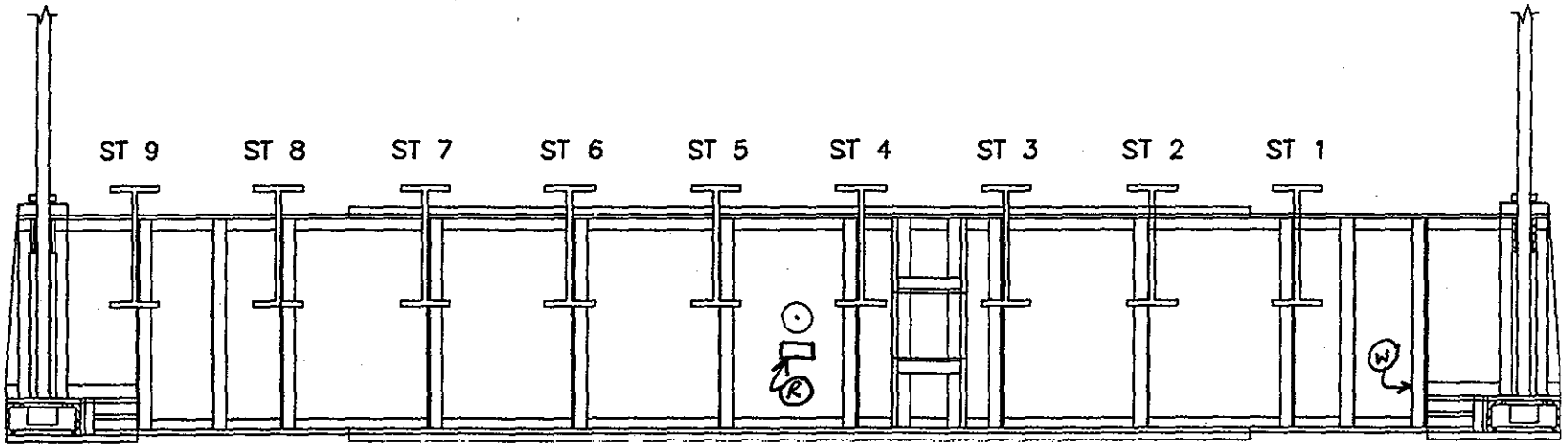

227
1L

SPAN 1
FLOORBEAM 12' N ELEV.

EL
NOTES:

FLOORBEAM ELEVATION

DEPARTMENT OF THE ARMY
NEW ENGLAND DISTRICT CORPS OF ENGINEERS

BOURNE HIGHWAY BRIDGE
ROUTINE INSPECTION

NOTES BY: LICHTENSTEIN
CONSULTING ENGINEERS

JOB #1986 DATE: 7/15/98
CREW: FP, EL SHEET 6 OF 7

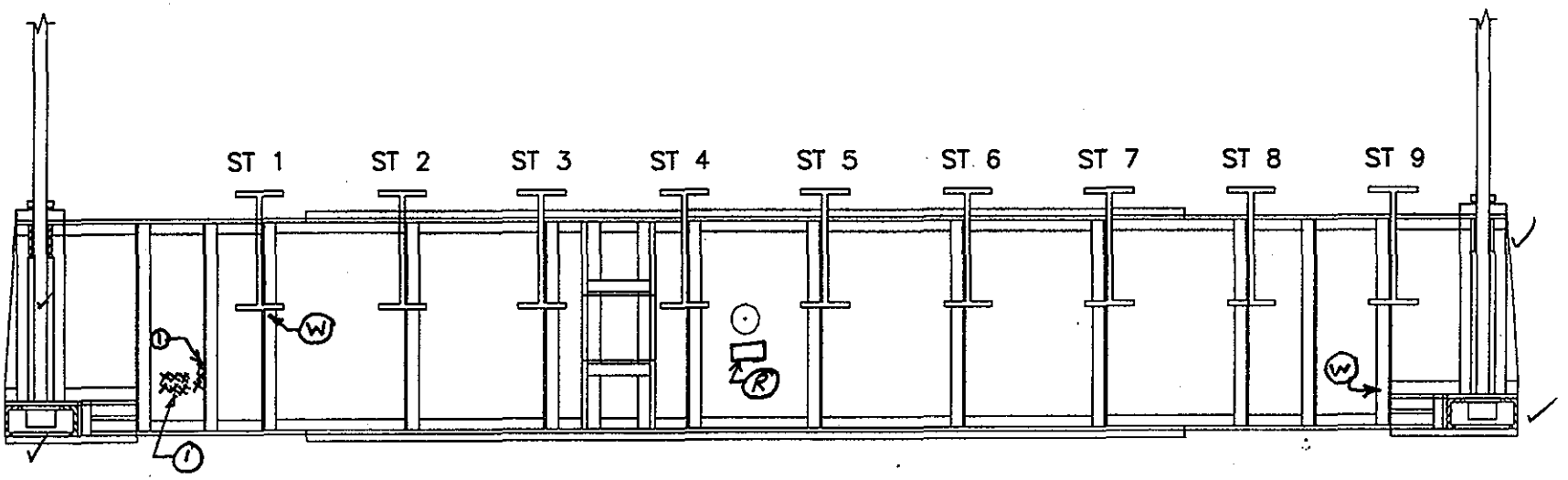

227

SPAN 1
FLOORBEAM 11' S ELEV.

EL
NOTES: 1 1/8" PITT. × 8" H

FLOORBEAM ELEVATION

DEPARTMENT OF THE ARMY
NEW ENGLAND DISTRICT CORPS OF ENGINEERS

BOURNE HIGHWAY BRIDGE
ROUTINE INSPECTION

NOTES BY: LICHTENSTEIN
CONSULTING ENGINEERS

JOB #1986	DATE: 7/15/98
CREW: FP, EL	SHEET 5 OF 7

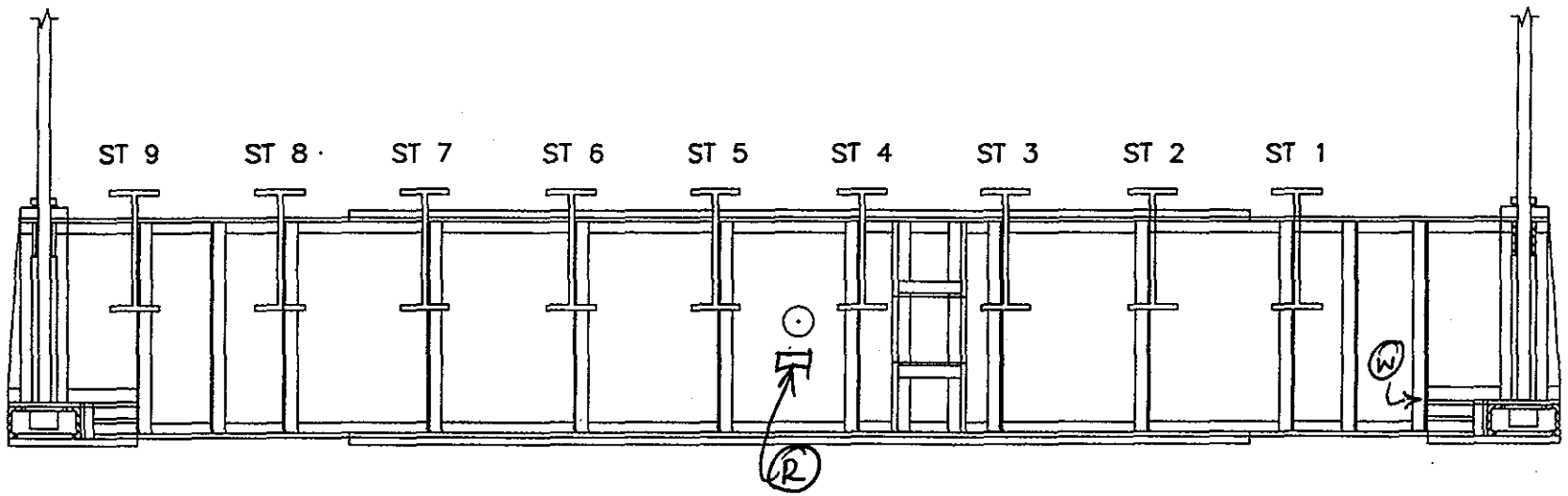

73
227

SPAN 1
FLOORBEAM 11' N ELEV.

EL
NOTES:

FLOORBEAM ELEVATION

DEPARTMENT OF THE ARMY
NEW ENGLAND DISTRICT CORPS OF ENGINEERS

BOURNE HIGHWAY BRIDGE
ROUTINE INSPECTION

NOTES BY: LICHTENSTEIN
CONSULTING ENGINEERS

JOB #1986 DATE: 7/15/98
CREW: FP, EL SHEET 4 OF 7

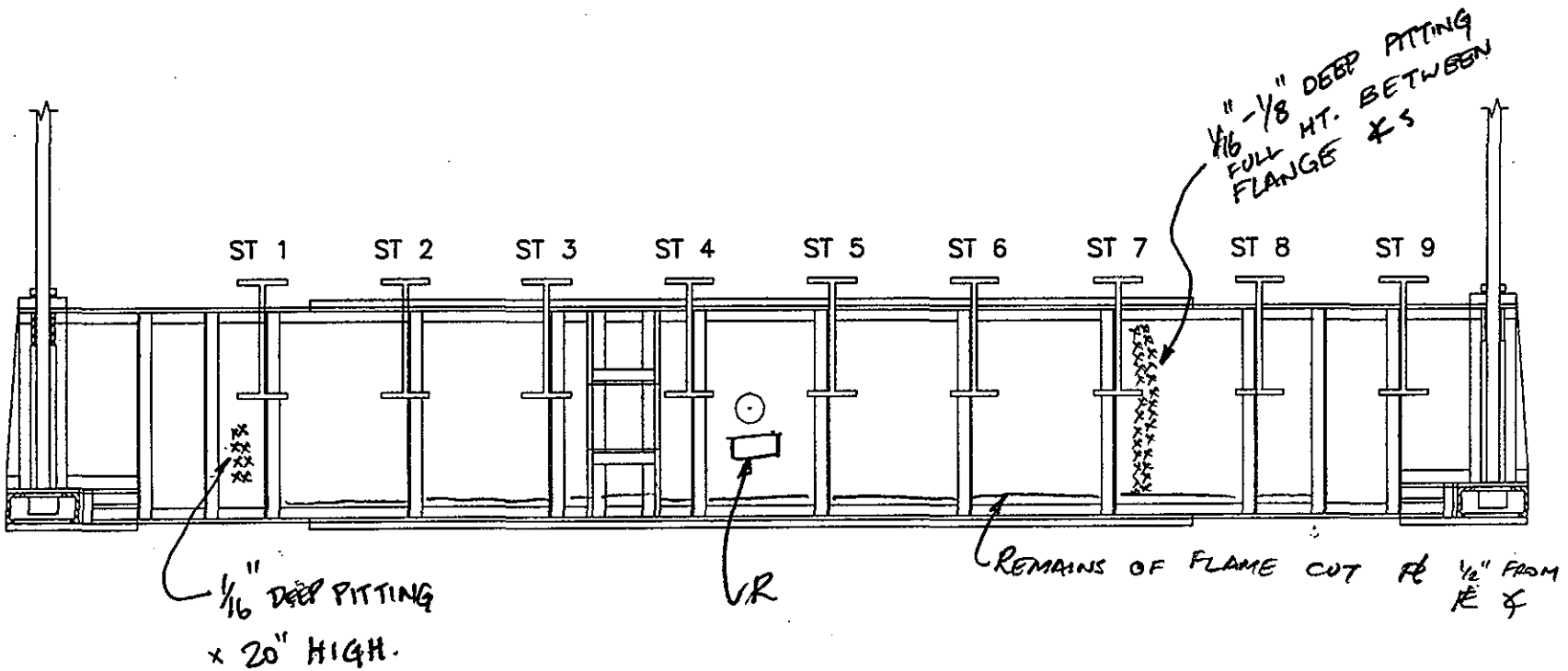

(74 227)

SPAN 1
FLOORBEAM 10' S ELEV.

EL
NOTES:

FLOORBEAM ELEVATION

DEPARTMENT OF THE ARMY
NEW ENGLAND DISTRICT CORPS OF ENGINEERS

BOURNE HIGHWAY BRIDGE
ROUTINE INSPECTION

NOTES BY: LICHTENSTEIN
CONSULTING ENGINEERS

JOB #1986 DATE: 7/15/98
CREW: FP, EL SHEET 3 OF 7

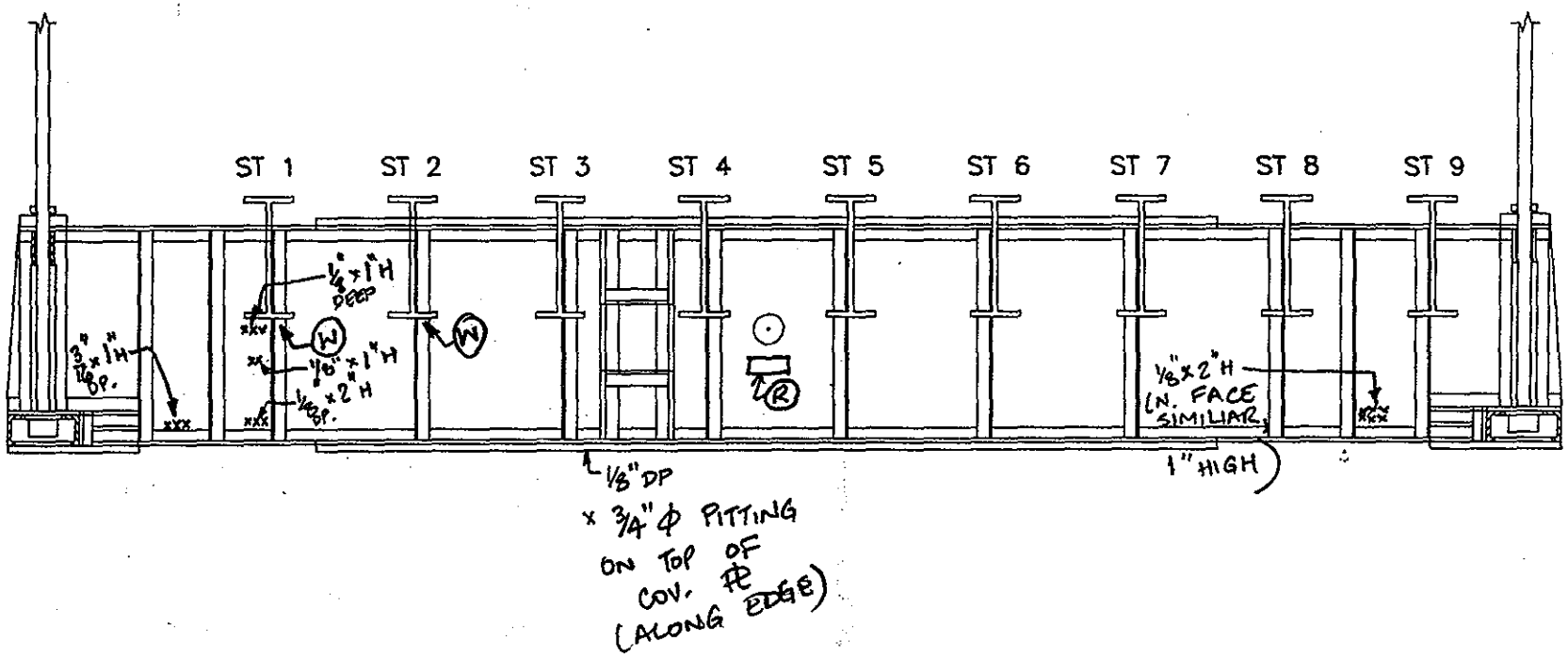

SPAN 1
FLOORBEAM 9' S ELEV.

EL
NOTES:

FLOORBEAM ELEVATION

DEPARTMENT OF THE ARMY
NEW ENGLAND DISTRICT CORPS OF ENGINEERS

BOURNE HIGHWAY BRIDGE
ROUTINE INSPECTION

NOTES BY: LICHTENSTEIN
CONSULTING ENGINEERS

JOB #1986 DATE: 7/15/98
CREW: FP, FI SHEET 2 OF 7

Note: No lateral Bracing 6'-9'

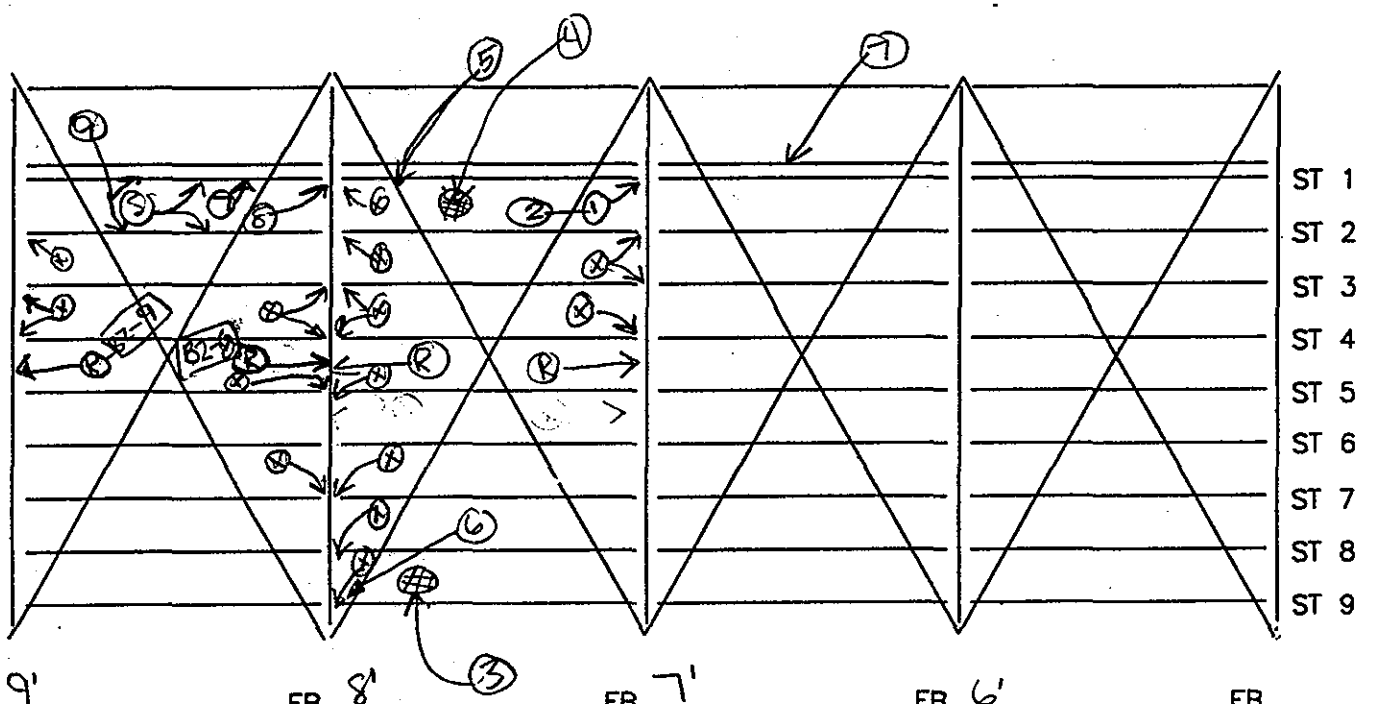

⑨ 1/8" Pitting x 3/4"Ø in edge of E Bot FL @ Mid span

SPAN 2

EL
NOTES:

① 1/16" Pitting x 10" ↕ on STR E web @ FB
② IR BTWN STR web & STIFF X 3/4" ↔ x 5" ↕
③ Mod Rust on Drain Pipe Support & Bot FL of STR 9 @ drain pipe
④ Lite Rust in Deck Pan @ drain pipe
⑤ 1/8" Pitting x Full width Bot of E top FL @ Mid Span + 1/8" Pitting x 3/4"Ø in edge of E Bot FL @ Mid Span of Str.
⑥ 1/16" Pitting x 12"Ø centered 18" From FB on W web of STR
⑦ 1/8" Pitting x 3" ↔ Bot of W Top FL @ Mid span
⑧ IR BTWN STR web & STIFF X 3/4" ↔ x 5" ↕

FLOOR SYSTEM	
DEPARTMENT OF THE ARMY NEW ENGLAND DISTRICT CORPS OF ENGINEERS	
BOURNE HIGHWAY BRIDGE ROUTINE INSPECTION	
NOTES BY: LICHTENSTEIN CONSULTING ENGINEERS	
JOB #1986	DATE: 7/10/98
CREW: EL MM	SHEET 8 OF 10

76/227

Note: No lateral. Bracing 5'-7'

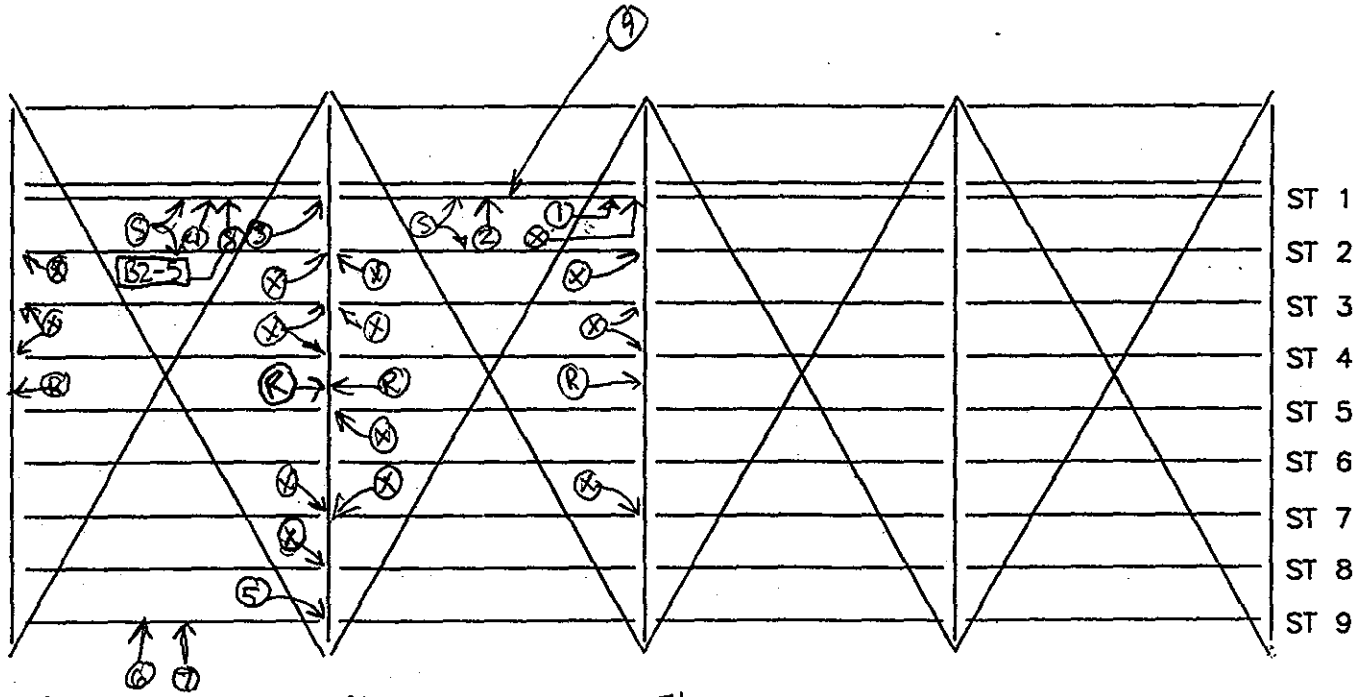

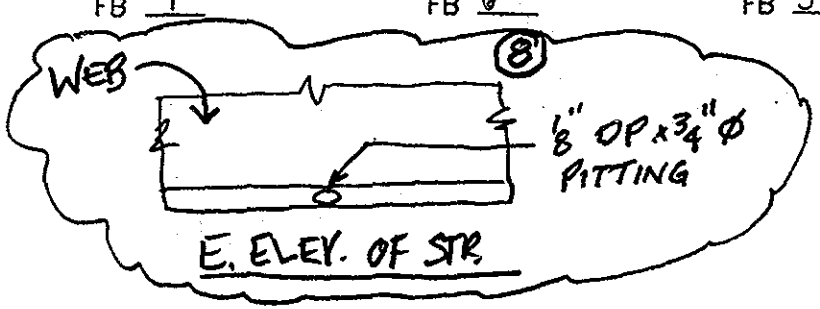

(8) (cont.) 1/16" x full width on top of W. bot FL

SPAN 2

EL
NOTES:
1. 1/16" Pitting x Full ↕ E web of STR @ FB
2. " " x 3" ↔ Bot of Top E FL @ Mid span
3. 1/8" Pitting x 2" ↕ E web STR @ FB
4. " " x Full width Bot of Top E FL @ Mid Span
5. IR BTWN STR web & STIFF ✗
6. 1/8" Pitting x 3" ↕ x 14" long on E web of STR Beginning 10' From FB 7'
7. " " " 3" ↔ x 15" long Bot E Top FL + 1/8" Pitting x 1 1/2" ↕ x 6" long E web @ Mid span
8. 1/8" Pitting x 3/4" Ø, edge of Bot FL @ Mid Span (SEE SKETCH)
9. Pitting @ mid span: 1/8" x 2" wide on bot of top W. FL, 3/16" x 2" ↕ on W. web

FLOOR SYSTEM	
DEPARTMENT OF THE ARMY NEW ENGLAND DISTRICT CORPS OF ENGINEERS	
BOURNE HIGHWAY BRIDGE ROUTINE INSPECTION	
NOTES BY: LICHTENSTEIN CONSULTING ENGINEERS	
JOB #1986	DATE: 7/10/98
CREW: EL, MM	SHEET 5 OF 10

77 227

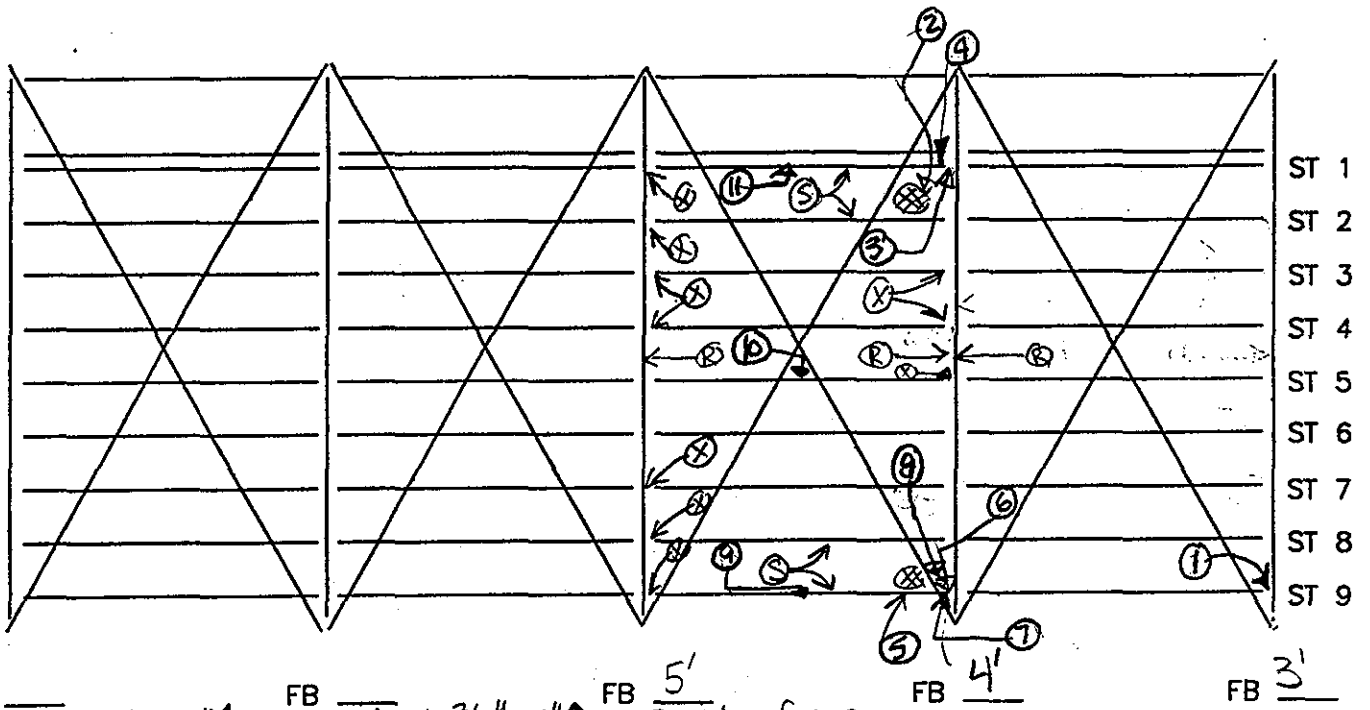

⑦ Pitting 1/8" x 1" ↕ on the W web; 3/16" x 1" ↕ on E web of STR @ FB
⑧ IR 1/2" thick BTWN Lateral Brace Top FL & Horiz gusset PL
⑨ 1/8" Pitting x Full width Bot of Top FL E & W & Top of Bot E & W FL @ Mid Span
⑩ Lite Rust on Top FL E & W 10' long @ Mid SPAN
⑪ Pitting 1/8" deep x 3" ↔ Bot of top E FL; 1/8" Pitting x 2" ↔ Bot of top W FL and Top of Bot W FL

SPAN 2

NOTES:

① IR BTWN STR web & STIFF ∡ 3/4" ↔ x 4" ↕
② Moderate Rust on Deck Pan & Drain Pipe support top Surfaces
③ IR BTWN STR web & STIFF ∡ 1" ↔ x 4" ↕
④ 1/8" Pitting x 3" ↕ on STR Bot W web @ FB
⑤ Heavy Rust with Pin holes in Deck Pan, heavy Rust on Drain Pipe support with up to 1/16" loss
⑥ IR 3/4" ↔ x 5" ↕ BTWN STR web & Stiff ∡

FLOOR SYSTEM	
DEPARTMENT OF THE ARMY NEW ENGLAND DISTRICT CORPS OF ENGINEERS	
BOURNE HIGHWAY BRIDGE ROUTINE INSPECTION	
NOTES BY: LICHTENSTEIN CONSULTING ENGINEERS	
JOB #1986	DATE: 7/9/98
CREW: EL MM	SHEET 1 OF 11

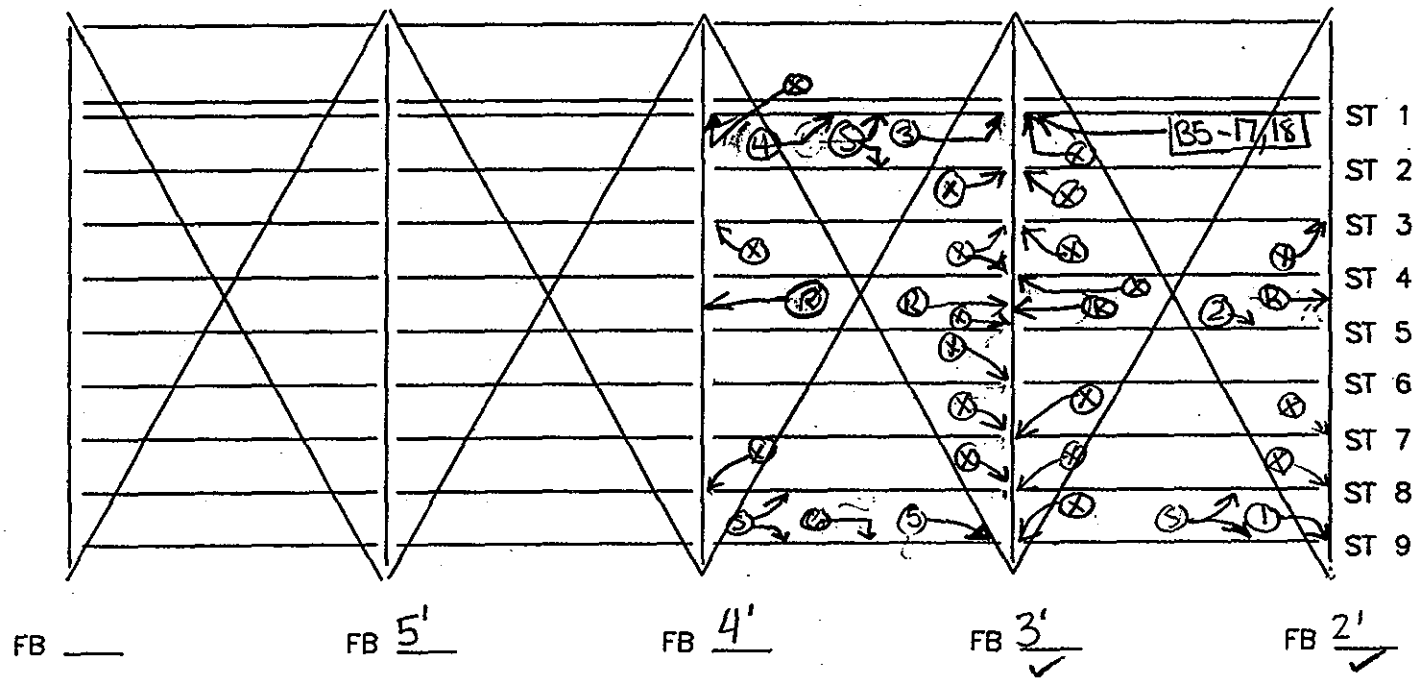

SPAN 2'

NOTES:
① 1/8" Pitting x 2" ↕ W web Top & Bot + Bot of E web + 3/16" Pitting x 2" ↕ top of E Web @ FB
② 1/16 Rust Top FL E & W 10' long centered at 1/3 span
③ 1/8"-3/16" Pitting x 3" ↕ on W. web Top & Bot, & 4" ↕ on E. Web Top & Bot on Str. @ FB
④ 1/8" Pitting x 3" ↔ Bot of Top FL E & W & Top of Bot E & W FL @ Mid Span
⑤ 1/8" Pitting x 1" ↕ + 1/16" Pitting x 2" ↕ W web @ FB
⑥ 1/16" " x 2" ↔ Bot of Top FL E & W + Top of Bot E FL + 1/16" Pitting x 3" ↔ Bot of FL @ Mid Span

FLOOR SYSTEM	
DEPARTMENT OF THE ARMY NEW ENGLAND DISTRICT CORPS OF ENGINEERS	
BOURNE HIGHWAY BRIDGE ROUTINE INSPECTION	
NOTES BY: LICHTENSTEIN CONSULTING ENGINEERS	
JOB #1986	DATE: 7/9/98
CREW: FI MM	SHEET 10 OF 11

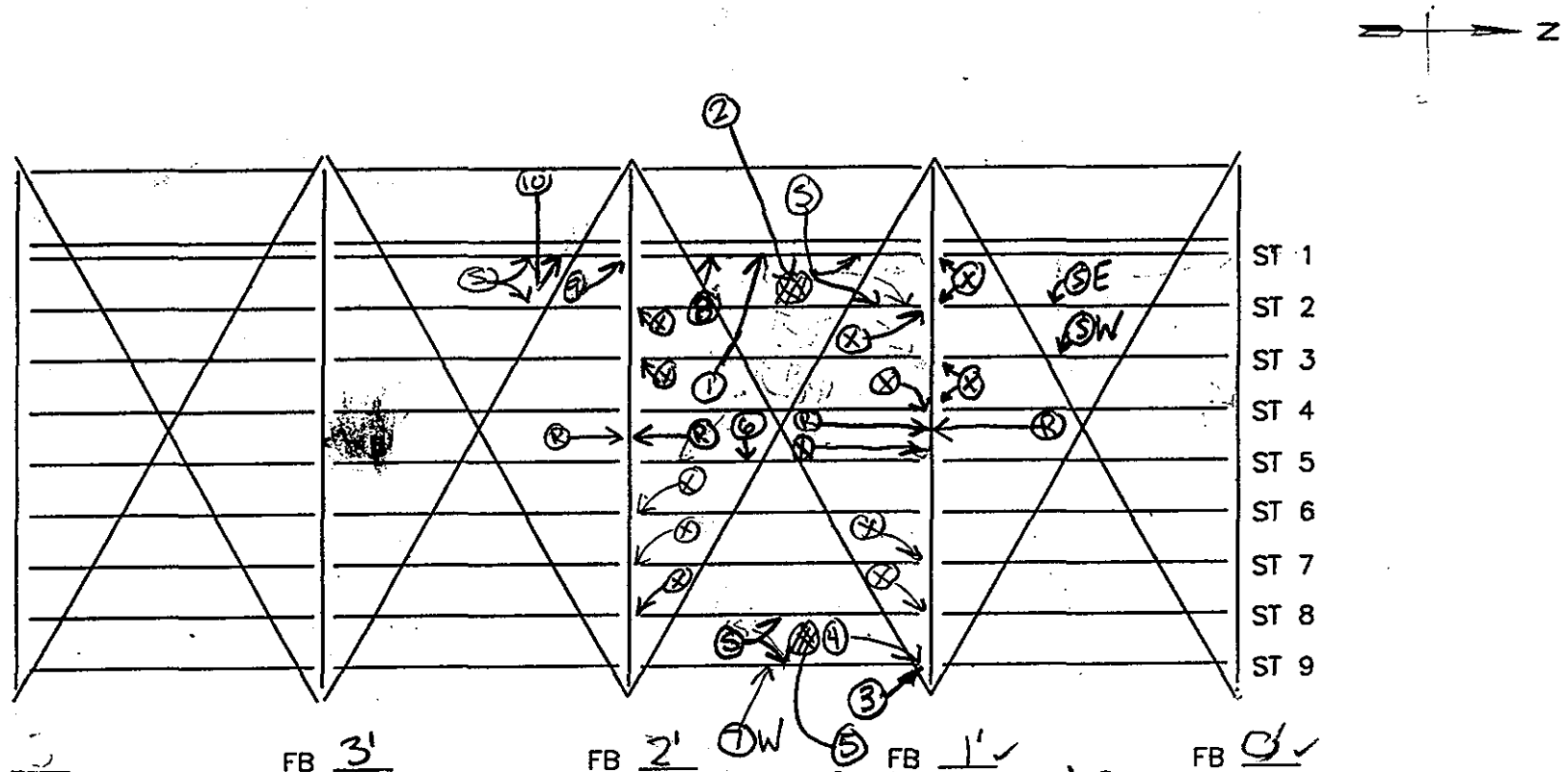

⑦ 1/8" Pitting x 3" ↔ x 12" long Bot of Top FL & Top of Bot FL @ mid Span
⑧ " " x Full width Bot of E & W top FL @ MID Span
⑨ 3/16" Pitting x 2" ↕ x 6" ↔ on W web + 1/16" pitting x 2" ∅ on W web + 1/8" pitting x 3" ↕ x 12" long on E web @ FB
⑩ 1/8" pitting by 3" ↔ Top of E Bot FL & Bot of W Top FL @ 1/3 span

SPAN 2

EL NOTES ① 1/8" Pitting Full width Bot of E top FL @ mid span + half width Bot of W top FL @ mid Span
② Up to 1/16" loss on horiz surfaces of Drainage Pipe support members + Mod Rust of STR Top FL
③ TR BTWN STR web & stiff ∡; 3/4" thick 3" ↕
④ 1/8" Pitting over entire top surface upper horiz gusset PL @ LAT Bracing Conn.
⑤ Heavy Rust with Pin holes in Deck Pan. Heavy Rust with up to 1/16" loss on horiz surfaces of drain pipe supports & E top & Bot FL of STR
⑥ Lite Rust top FL E & W from Mid Span to FB 2'

FLOOR SYSTEM	
DEPARTMENT OF THE ARMY NEW ENGLAND DISTRICT CORPS OF ENGINEERS	
BOURNE HIGHWAY BRIDGE ROUTINE INSPECTION	
NOTES BY: LICHTENSTEIN CONSULTING ENGINEERS	
JOB #1986	DATE: 7/9/98
CREW: EL MM	SHEET 8 OF 11

80
227

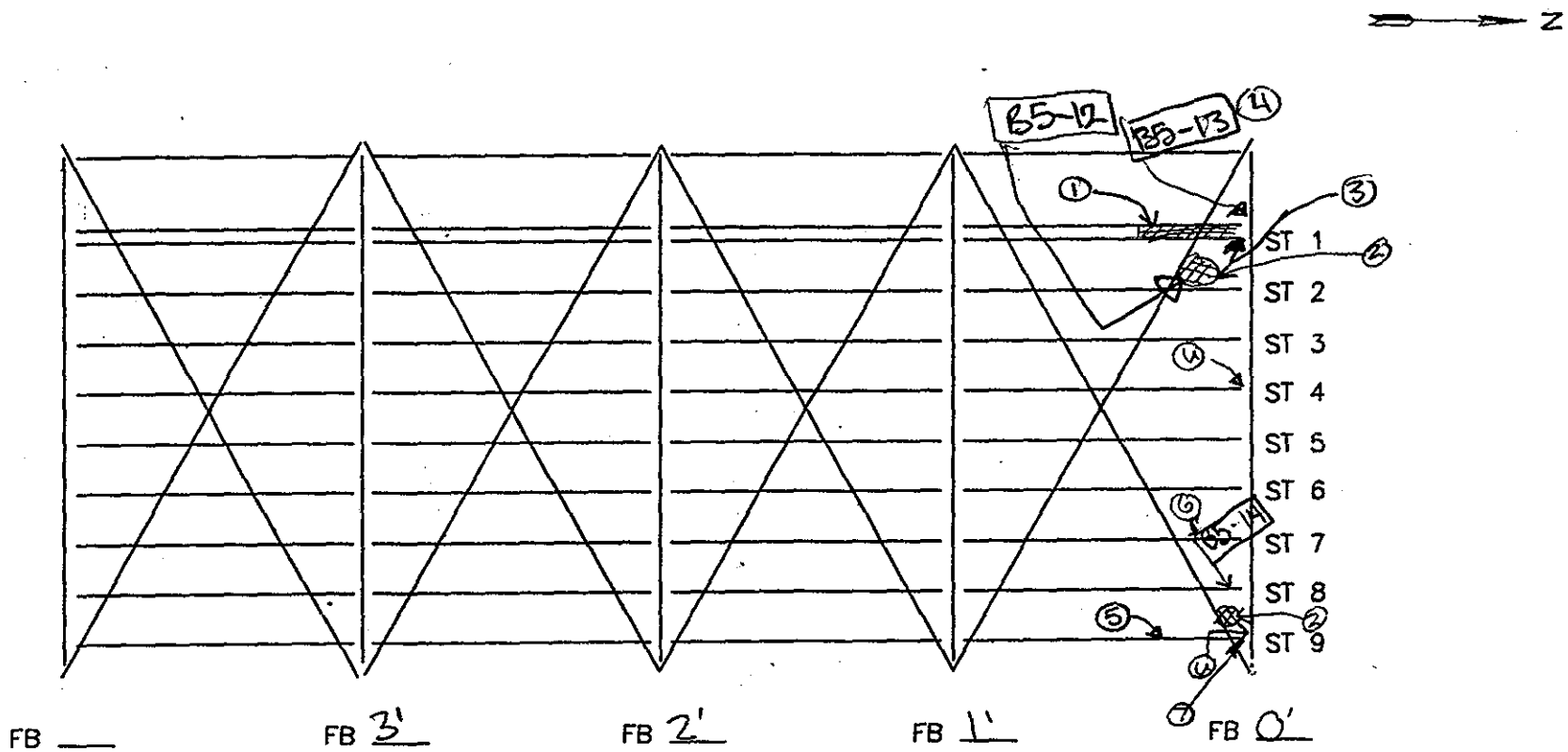

SPAN 2

EL
NOTES:
① Heavy Rust with Pin holes in Deck Pan
② @ Drainage Pipe: Deck Pan has heavy Rust with Pin holes, Drainage Pipe Support members have Heavy Rust w/up to 1/16" loss ALL surfaces
③ 1/16" Pitting x 18" ↕ x 30" ↔ (E Face) x 12" ↔ (W Face) on Web @ FB
④ IR BTWN STR web & stiff ∡ 1" thick x 10" ↕
⑤ Heavy Rust with 1/8" loss Full width W Bot FL 114" from FB
⑥ 2" sq Pl's welded to Bot FL of STR; one @ 36" & one @ 46" From FB
⑦ 1/16" Pitting Full HT. of W. web of STR @ FB
of Rt

FLOOR SYSTEM	
DEPARTMENT OF THE ARMY NEW ENGLAND DISTRICT CORPS OF ENGINEERS	
BOURNE HIGHWAY BRIDGE ROUTINE INSPECTION	
NOTES BY: LICHTENSTEIN CONSULTING ENGINEERS	
JOB #1986	DATE: 7/9/98
CREW: [illegible] MM	SHEET 7 OF [illegible]

81
227

STRINGER CONDNS

	BAY	TRUSS	SPAN	CONDN.
STR #1	L4'L5'	W	2	U/S OF TOP ∠, W. SIDE @ MIDSPAN, 1/8" PITT. F.W. OF W. SIDE.
	PP. L5'	W.	2	(X) @ CONN ∠
	L3'L4'	W	2	1/8" PITT. FOR 1" WIDE ON W. U/S OF TOP ∠ @ MIDSPAN @ PP. L5', 1/8" PITT. x 1" H. x 8" LONG @ W. FACE JUST ABOVE BOT. FILLET OF WEB @ SUPPORT. ——, 1/8" PITT. x 1" H. x 2" LONG JUST BELOW COPE @ SUPPORT
	L8'L9'	W	2	U/S OF TOP ∠, N/S, 3/16" PITT. x 1" W., W. HALF OF ∠
	L8'L7'	W	2	MIDSPAN, UNDERSIDE TOP ∠ W. 1/8" PITT. F.W. ADJACENT SIDEWALK STR. UNDERSIDE W. MEMBER 3/16" PITT. F.W., AT MIDSPAN.

82
127

EL
NOTES:

SPAN 2: FLOOR SYSTEM

DEPARTMENT OF THE ARMY
NEW ENGLAND DISTRICT CORPS OF ENGINEERS

BOURNE HIGHWAY BRIDGE
ROUTINE INSPECTION

NOTES BY: LICHTENSTEIN
CONSULTING ENGINEERS

JOB #1986 | DATE: 7/13/98

CREW: FP, PWN | SHEET 4 OF 4

SPAN 2

PP 0'-1': CATWALK HANDRAIL IN HARD CONTACT w/ LATERAL BRACING w/ ABRASION DUST & LOOSE FASTENERS BTWN HANDRAIL & HANDRAIL SUPPORT X'S

PP 1'-2': CATWALK HANDRAIL IN HARD CONTACT w/ LATERAL BRACING w/ ABRASION DUST

PP 2'-3': SIM 1'-2'

PP 3'-4': " "

PP 4'-5': " "

PP 5'-9': NO LATERAL BRACING FOR FLOOR SYSTEM

83 227

EL

SPAN 2 : FLOOR SYSTEM

DEPARTMENT OF THE ARMY
NEW ENGLAND DISTRICT CORPS OF ENGINEERS

BOURNE HIGHWAY BRIDGE
ROUTINE INSPECTION

NOTES BY: LICHTENSTEIN
CONSULTING ENGINEERS

JOB #1986	DATE: 7·10·98
CREW: FI MM	SHEET 10 OF 10

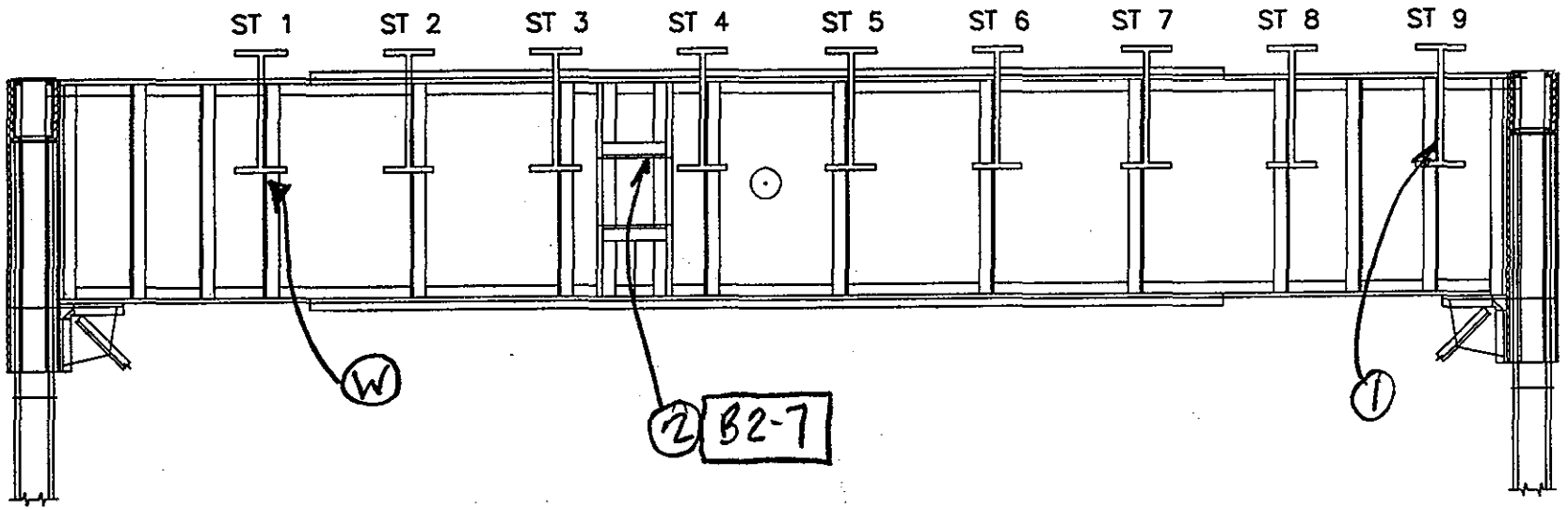

84
227

SPAN 2
FLOORBEAM 8' S ELEV.

EL
NOTES: ① 1/8" PITTING x 4" ↔ ON STIFF & OSL
② OSL OF ACCESS HOLE FRAME TOP & BENT 1½" ↑ @ E END TAPERING TO 0" @ MIDSPAN OF ∡

FLOORBEAM ELEVATION	
DEPARTMENT OF THE ARMY NEW ENGLAND DISTRICT CORPS OF ENGINEERS	
BOURNE HIGHWAY BRIDGE ROUTINE INSPECTION	
NOTES BY: LICHTENSTEIN CONSULTING ENGINEERS	
JOB #1986	DATE: 7-10-98
CREW: EL, MM	SHEET 9 OF 10

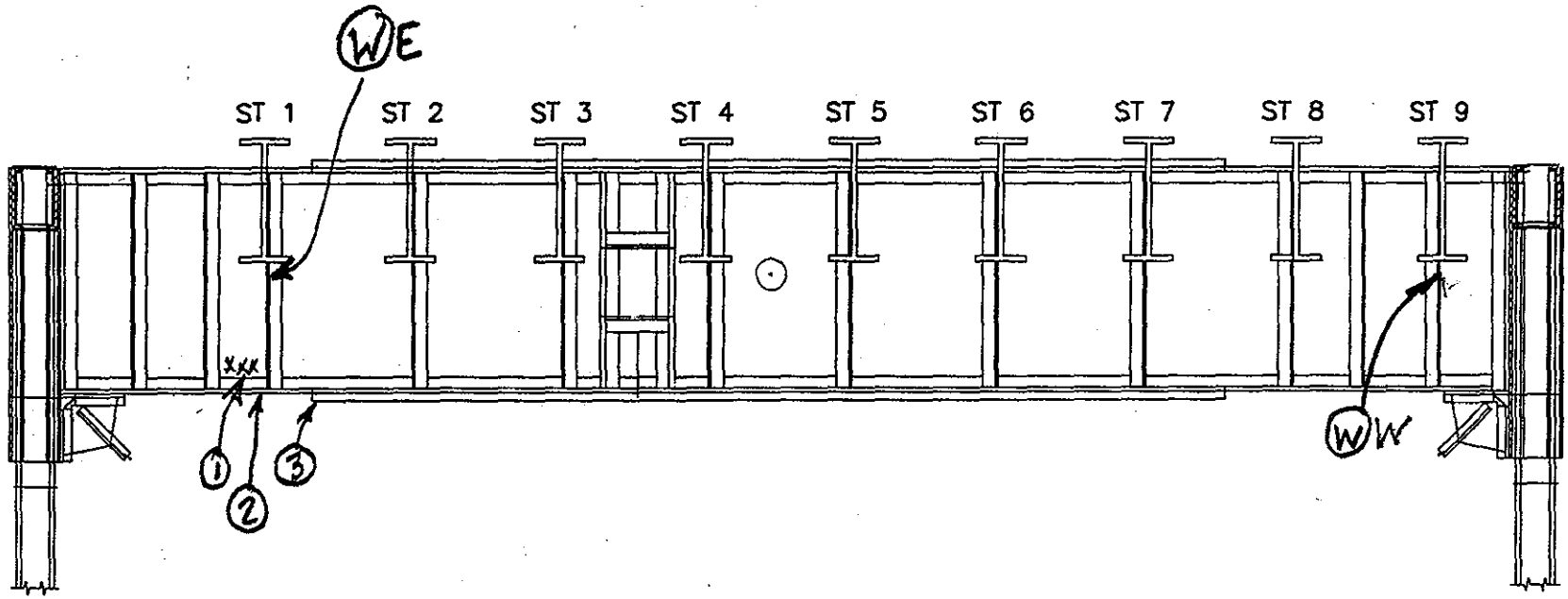

85
227

SPAN 2
FLOORBEAM 7' S ELEV.

NOTES:

1. 1/8" PITTING x 3" ↕ ON WEB
2. 1/8" " x 6" Ø ON TOP OF BOT FL
3. 1/8" " x 3¼" ↔ x 6" LONG ON TOP OF COV. FL

FLOORBEAM ELEVATION

DEPARTMENT OF THE ARMY
NEW ENGLAND DISTRICT CORPS OF ENGINEERS

BOURNE HIGHWAY BRIDGE
ROUTINE INSPECTION

NOTES BY: LICHTENSTEIN
CONSULTING ENGINEERS

JOB #1986 | DATE: 7·10·98
CREW [illegible], ME | SHEET 7 OF 10

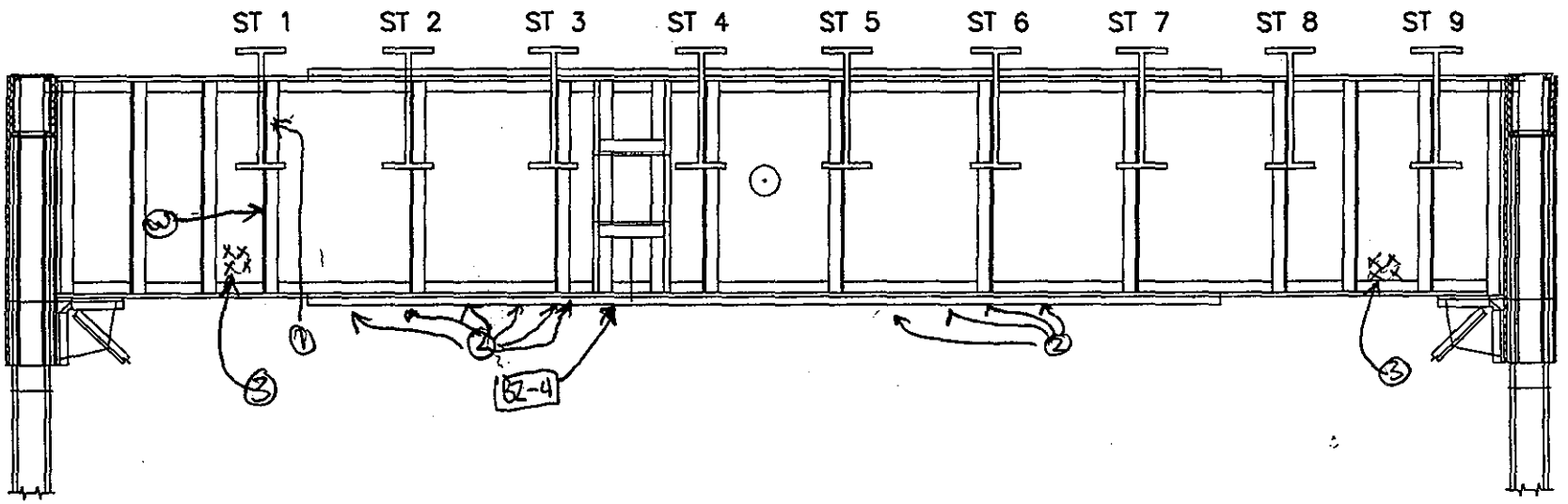

SPAN 2
FLOORBEAM 6' S ELEV.

EL
NOTES: ① IR BTWN STR Web & STEFF ∡ 3/8" ↔ x5" ↕
② 1/8" Pitting x 3/4" ⌀ Top of Bot FLCov. PL
③ " " x 3" ↕ x 3" long

FLOORBEAM ELEVATION

DEPARTMENT OF THE ARMY
NEW ENGLAND DISTRICT CORPS OF ENGINEERS

BOURNE HIGHWAY BRIDGE
ROUTINE INSPECTION

NOTES BY: LICHTENSTEIN
CONSULTING ENGINEERS

JOB #1986	DATE: 7/10/98
CREW: EL, MM	SHEET 6 OF 10

86
227

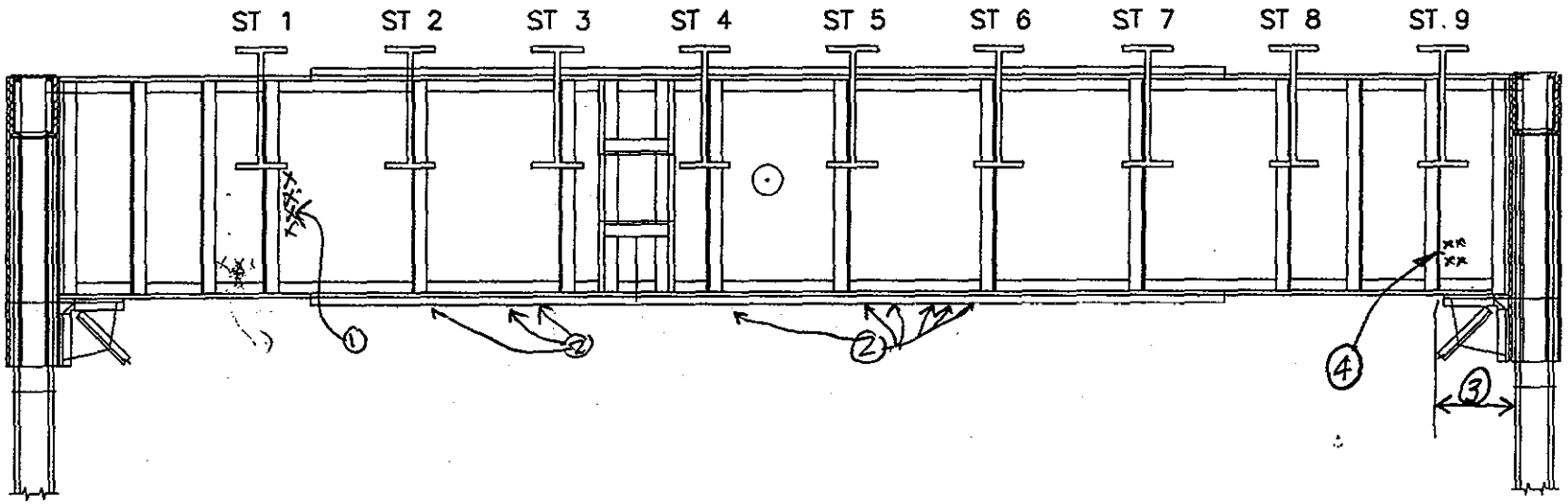

227 87

SPAN 2
FLOORBEAM 5' S ELEV.

NOTES:
1. 1/8" Pitting x 3" ↕ + 1/16" Pitting x 18" ↕
2. 1/8" deep Pitting x 3/4" Ø on Top of Bot Cov PL
3. Mod Rust on Bot FL of FB
4. 1/8" Pitting x 7" ↕
5. [illegible]

?

FLOORBEAM ELEVATION

DEPARTMENT OF THE ARMY
NEW ENGLAND DISTRICT CORPS OF ENGINEERS

BOURNE HIGHWAY BRIDGE
ROUTINE INSPECTION

NOTES BY: LICHTENSTEIN
CONSULTING ENGINEERS

JOB #1986 | DATE: 7/16/98
CREW: MM | SHEET 4 OF 10

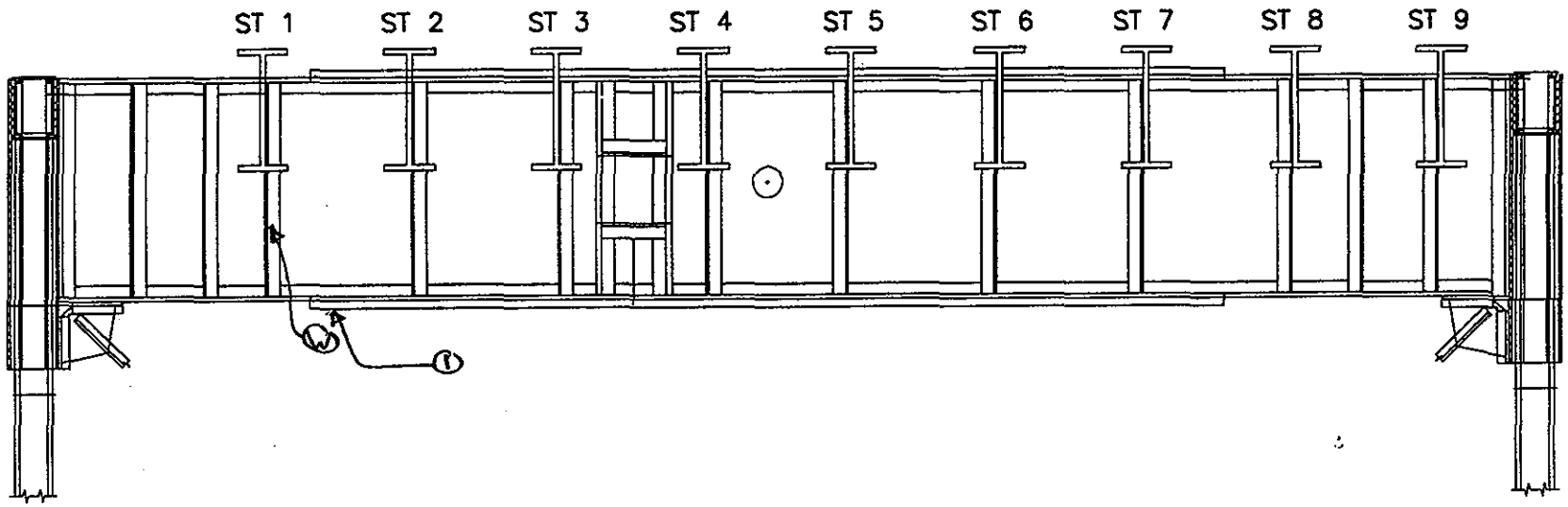

SPAN 2
FLOORBEAM 4' S ELEV.

EL
NOTES: ① 1/8" pitting x 3/4" ↔ x 6" long, top of Bot FL Cov. Pl

FLOORBEAM ELEVATION

DEPARTMENT OF THE ARMY
NEW ENGLAND DISTRICT CORPS OF ENGINEERS

BOURNE HIGHWAY BRIDGE
ROUTINE INSPECTION

NOTES BY: LICHTENSTEIN
CONSULTING ENGINEERS

JOB #1986 DATE: 7/10/98
CREW: EL, MM SHEET 3 OF 10

88
227

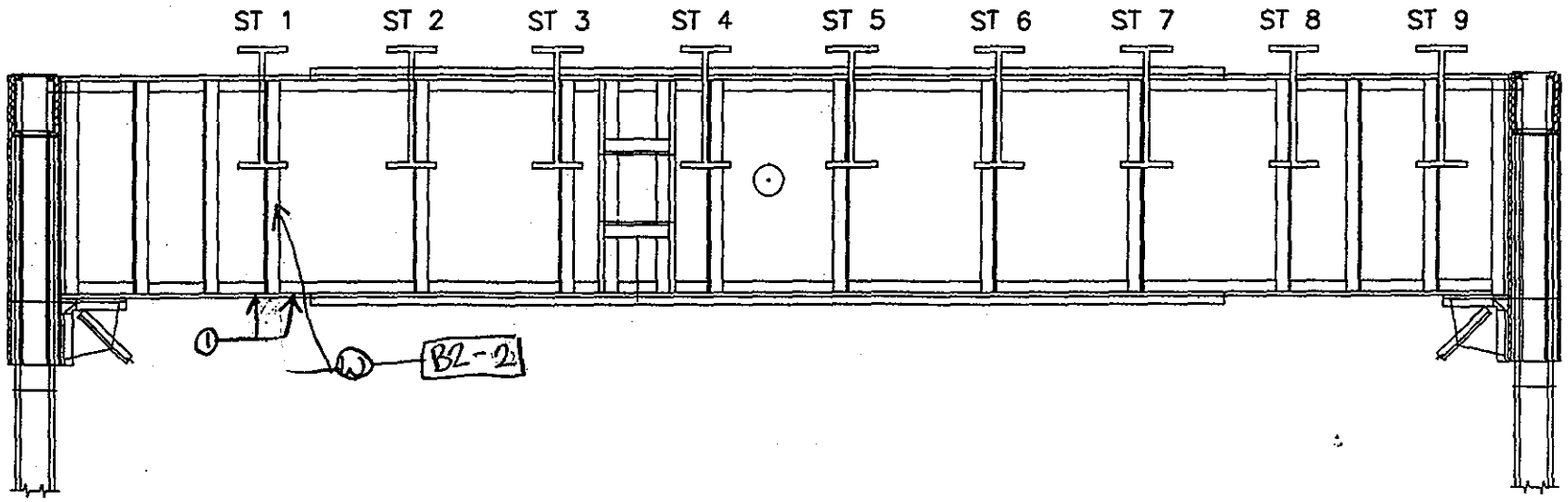

SPAN 2
FLOORBEAM 3' S ELEV.

EL
NOTES: 1/16" to 1/8" Pitting x 4" Ø top of Bot Fl.

FLOORBEAM ELEVATION

DEPARTMENT OF THE ARMY
NEW ENGLAND DISTRICT CORPS OF ENGINEERS

BOURNE HIGHWAY BRIDGE
ROUTINE INSPECTION

NOTES BY: LICHTENSTEIN
CONSULTING ENGINEERS

JOB #1986 DATE: 7/10/98
CREW: EL, MM SHEET 2 OF 10

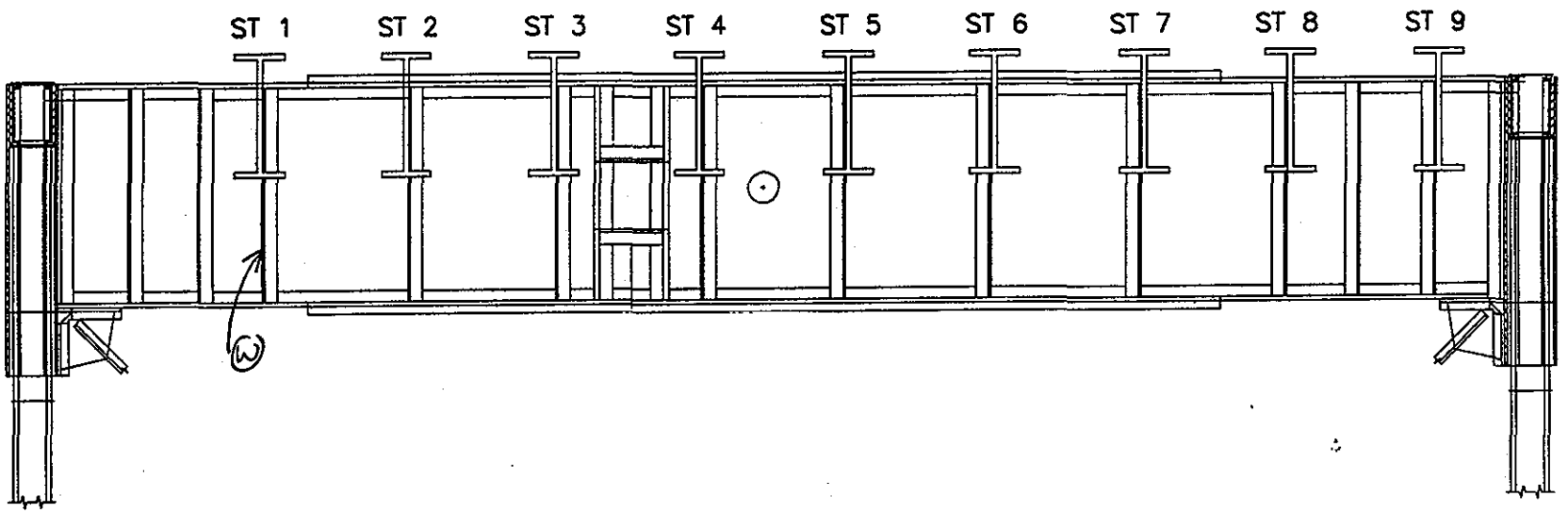

SPAN 2
FLOORBEAM 2' S ELEV.

EL
NOTES:

FLOORBEAM ELEVATION

DEPARTMENT OF THE ARMY
NEW ENGLAND DISTRICT CORPS OF ENGINEERS

BOURNE HIGHWAY BRIDGE
ROUTINE INSPECTION

NOTES BY: LICHTENSTEIN
CONSULTING ENGINEERS

JOB #1986 | DATE: 7/9/98
CREW: EL, MM | SHEET 9 OF 11

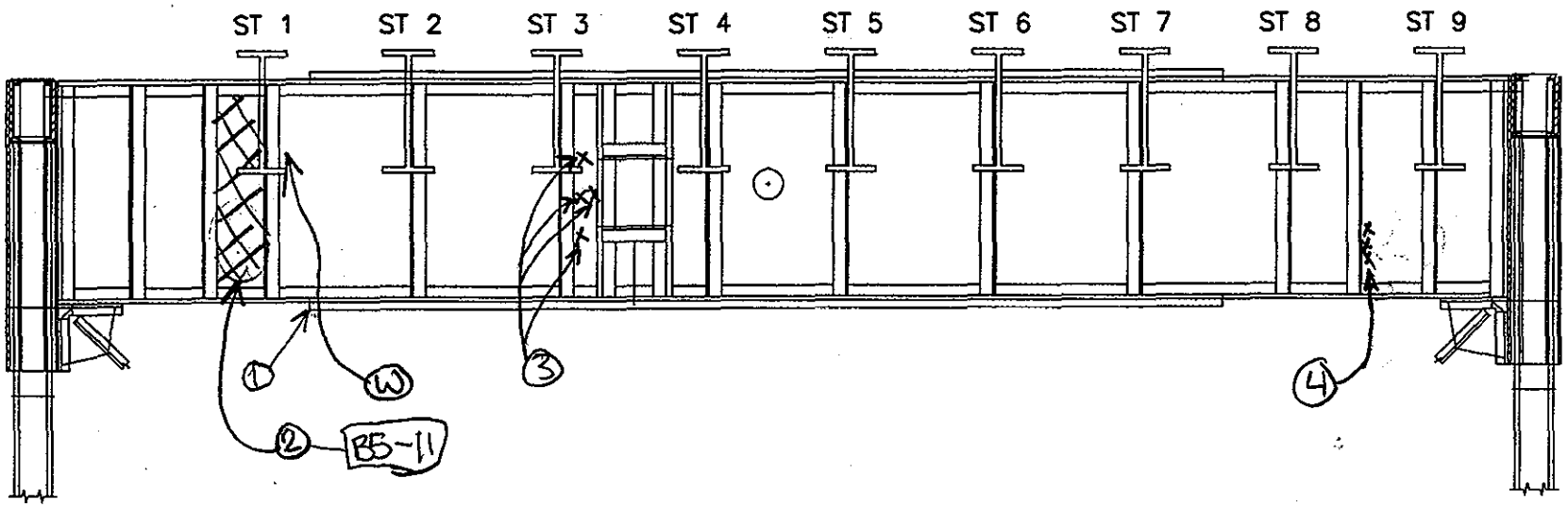

SPAN 2
FLOORBEAM 0' S ELEV.

EL
NOTES:
1. 1/8" Pitting x 3/4" ↔ x 12" long top of cov PL
2. 1/8" " over 50% of area
3. 1/16" Pitting x 6" ↕ x 3" ↔ (4 locations)
4. 1/16" to 1/8" Pitting x 18" ↔ x 36" ↕

FLOORBEAM ELEVATION

DEPARTMENT OF THE ARMY
NEW ENGLAND DISTRICT CORPS OF ENGINEERS

BOURNE HIGHWAY BRIDGE
ROUTINE INSPECTION

NOTES BY: LICHTENSTEIN
CONSULTING ENGINEERS

JOB #1986 | DATE: 7/9/96
CREW: ELMM | SHEET 6 OF 11

91
227

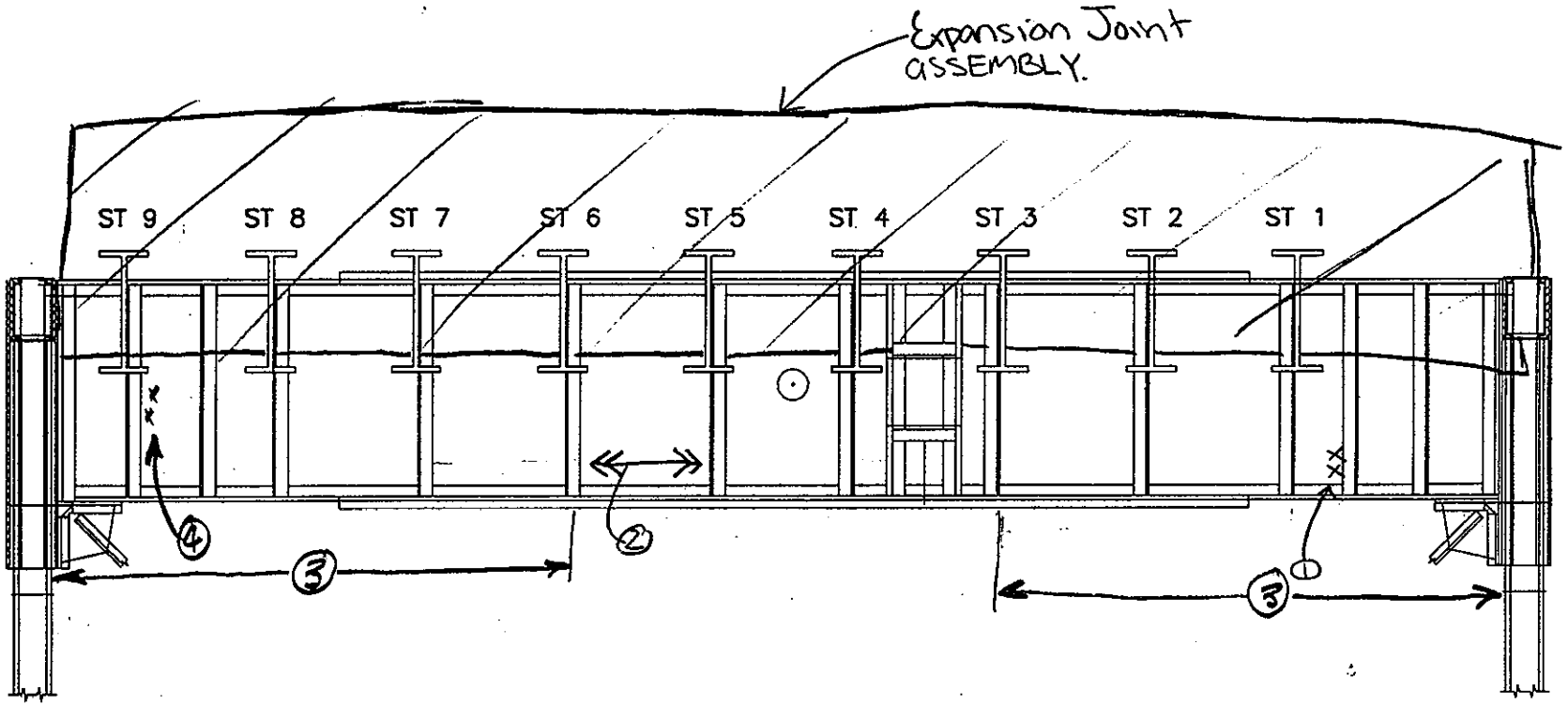

227
92

SPAN 2
FLOORBEAM 0' N ELEV.

EL
NOTES: ① 1/8" Pitting x 4" ↔ x 8" ↕
② Stub of Flame cut PL 1/2" above Bot FL Full length
③ Lite - Mod. RUST ON BOT FL
④ 3/16" Pitting x 2"Ø, 2 locations in vertical line along stiffener

FLOORBEAM ELEVATION	
DEPARTMENT OF THE ARMY NEW ENGLAND DISTRICT CORPS OF ENGINEERS	
BOURNE HIGHWAY BRIDGE ROUTINE INSPECTION	
NOTES BY: LICHTENSTEIN CONSULTING ENGINEERS	
JOB #1986	DATE: 7/9/98
CREW: EL, MM	SHEET 5 OF 11

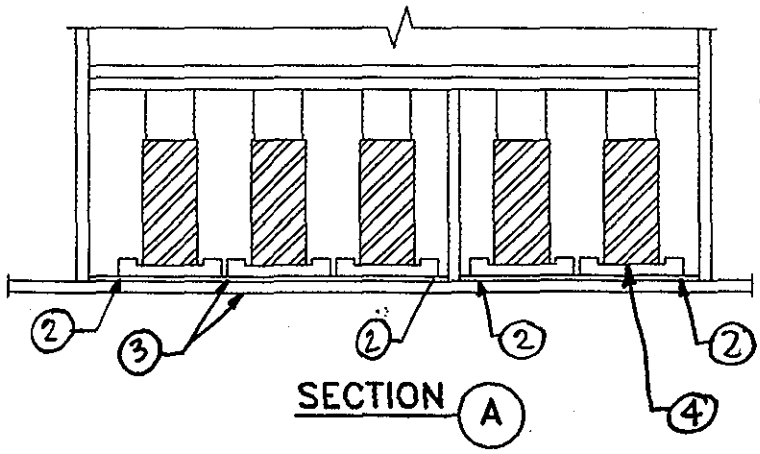

⑤ Retaining Pin is broken.

⑥ 3/8" Triangular PL welded to Supp. Col. & Deck Jt. B6-17, 18

⑦ Signs of Exp/Cont. noted

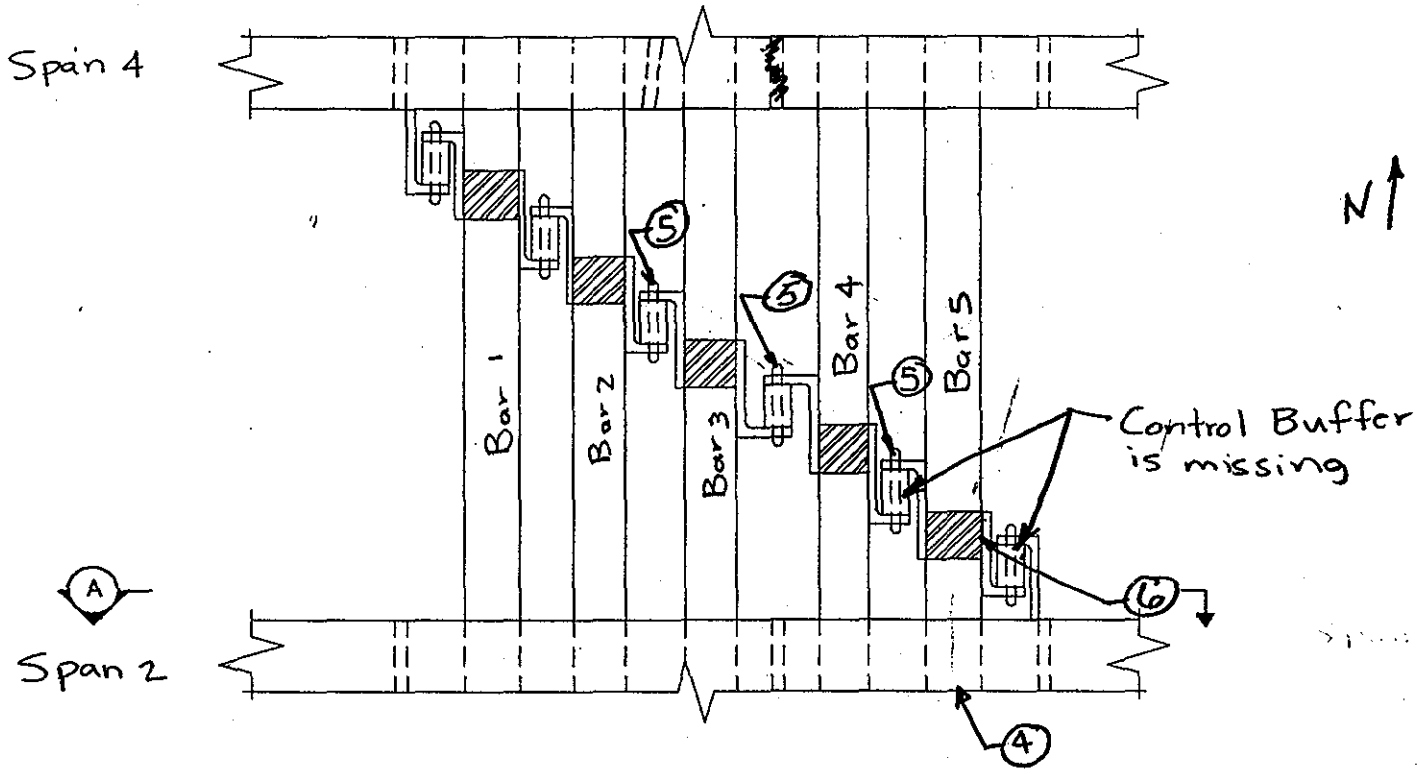

TYPICAL EXP. ASSEMBLY @ PIER 4

EL

NOTES: Jt. Assembly btwn Str. 1 & 2

① Heavy Rust w/ upto 1/16" Loss on entire Jt. Assembly.

② Tack welds broken (Span 2 & 4)

③ 3/8" IR btwn PL & Supp: Box And Supp Box & Beam Span 2 & 4 Except @ PL & Box under Group of 2, Span 2

④ 1/8" Gap btwn Supp Bar & Brg. which Closes under LL (Span 2)

DECK JOINT	
DEPARTMENT OF THE ARMY NEW ENGLAND DISTRICT CORPS OF ENGINEERS	
BOURNE HIGHWAY BRIDGE ROUTINE INSPECTION	
NOTES BY: LICHTENSTEIN CONSULTING ENGINEERS	
JOB #1986	DATE: 7/14/98
CREW: SD, EL	SHEET 1 OF 10

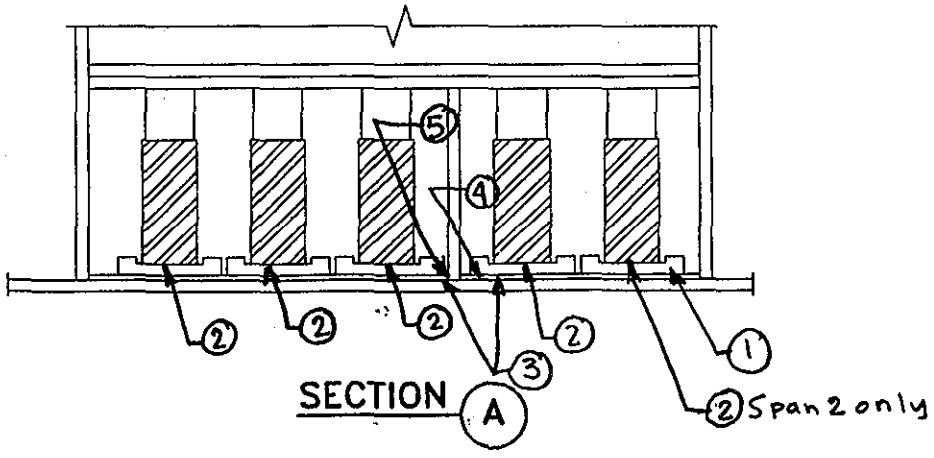

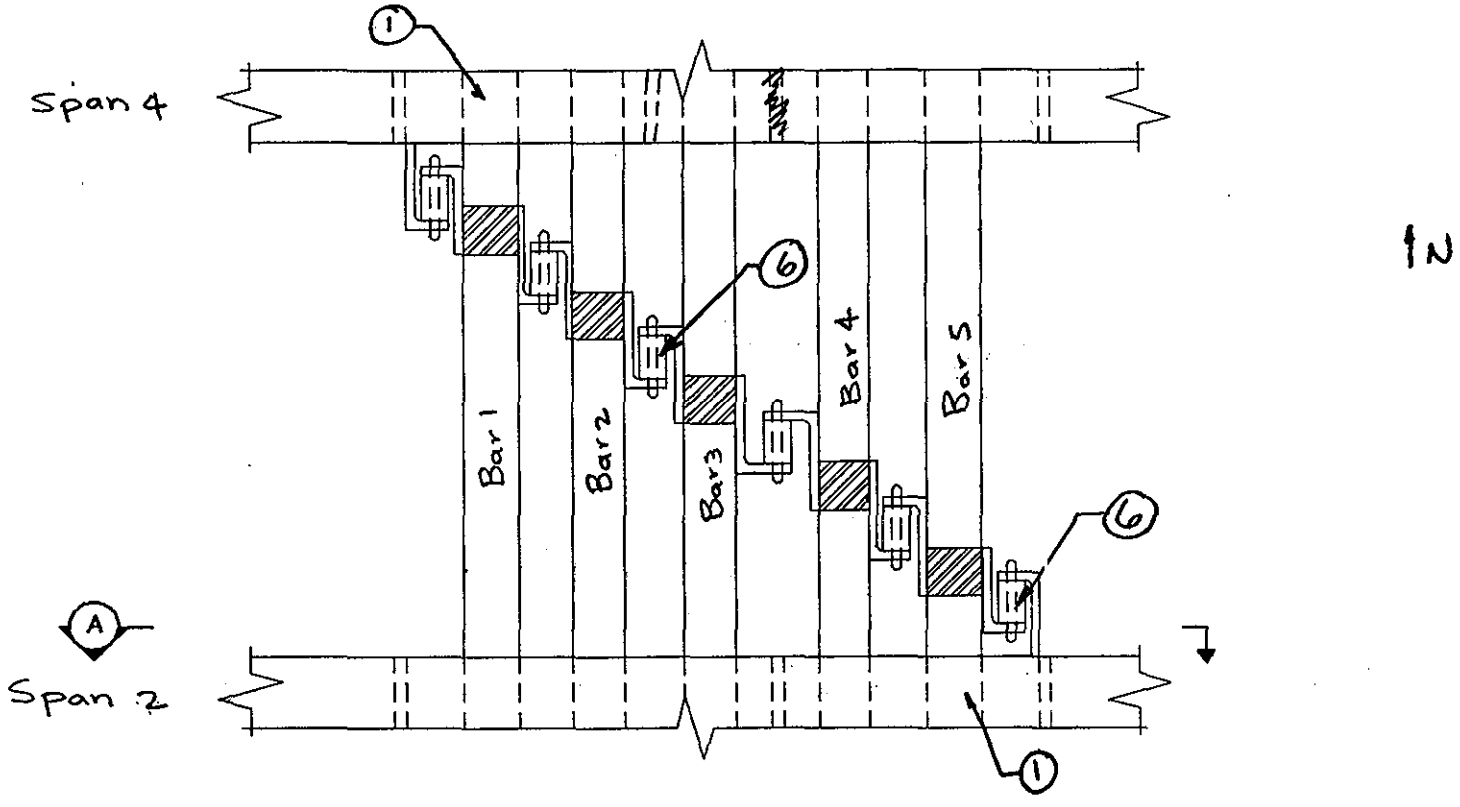

TYPICAL EXP. ASSEMBLY @ PIER 4

EL
NOTES: Jt. Assembly btwn. str. 2 & 3.

1. Brg is broken (Span 2 & 4)
2. Upto 1/4" Gap btwn. Supp. Bar & Brg. (Span 2 & 4)
3. Tack Welds Broken (Span 4)
4. Tack Weld Broken (Span 2)
5. 1/4" Gap btwn. PL & Supp. Box which bangs under LL.
6. Control Buff missing & Pin is missing @ Bar 3
7. Signs of Exp./Contr. Noted

DECK JOINT	
DEPARTMENT OF THE ARMY NEW ENGLAND DISTRICT CORPS OF ENGINEERS	
BOURNE HIGHWAY BRIDGE ROUTINE INSPECTION	
NOTES BY: LICHTENSTEIN CONSULTING ENGINEERS	
JOB #1986	DATE: 7/14/98
CREW: SD, EL	SHEET 2 OF 10

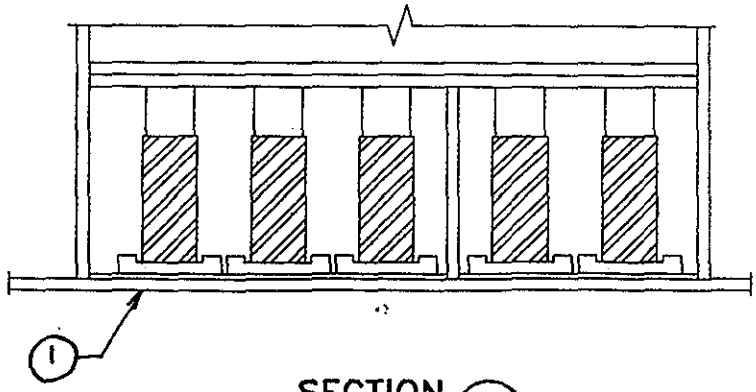

SECTION A

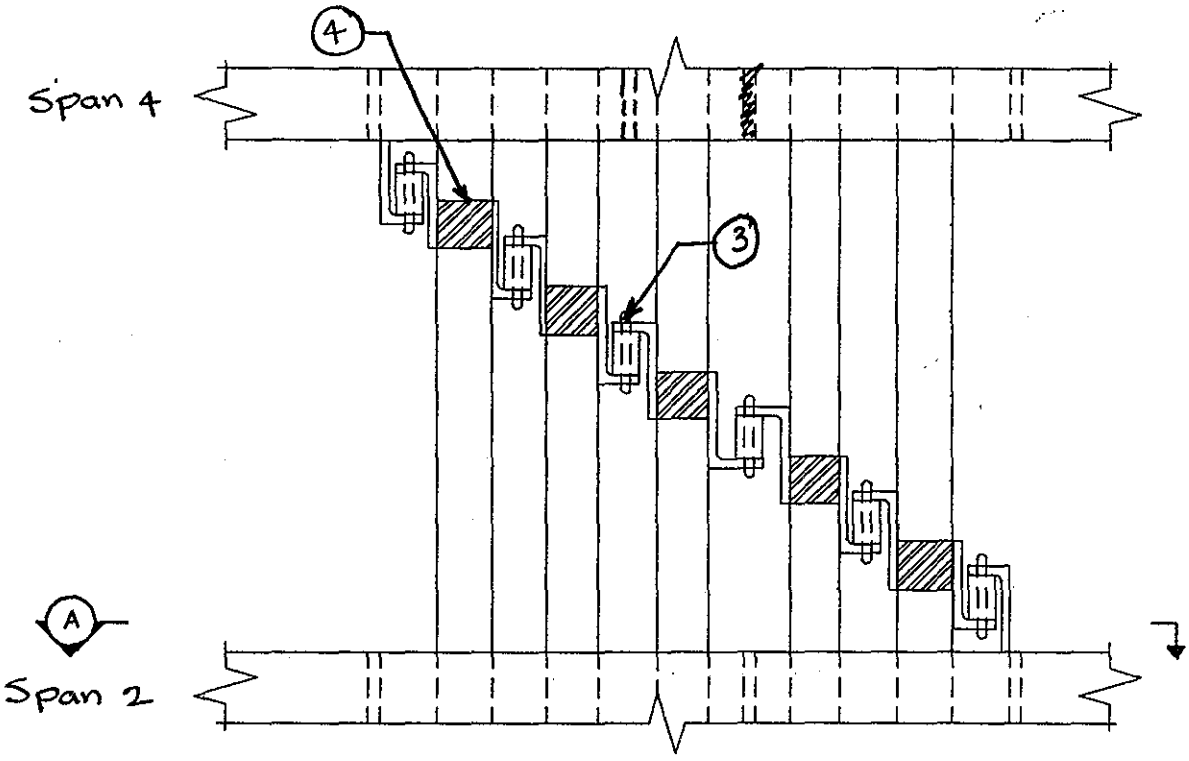

TYPICAL EXP. ASSEMBLY @ PIER 4

EL
NOTES: Jt. Assembly btwn. Str. 3 & 4

1. 1/8" IR btwn Supp. Box & Beam Full length (Span 2 & 4)
2. Signs of Exp/Contraction Noted.
3. Retaining Pin is broken
4. Welds @ Top of Supp. Column are broken

DECK JOINT	
DEPARTMENT OF THE ARMY NEW ENGLAND DISTRICT CORPS OF ENGINEERS	
BOURNE HIGHWAY BRIDGE ROUTINE INSPECTION	
NOTES BY: LICHTENSTEIN CONSULTING ENGINEERS	
JOB #1986	DATE: 7/14/98
CREW: SD, EL	SHEET 3 OF 10

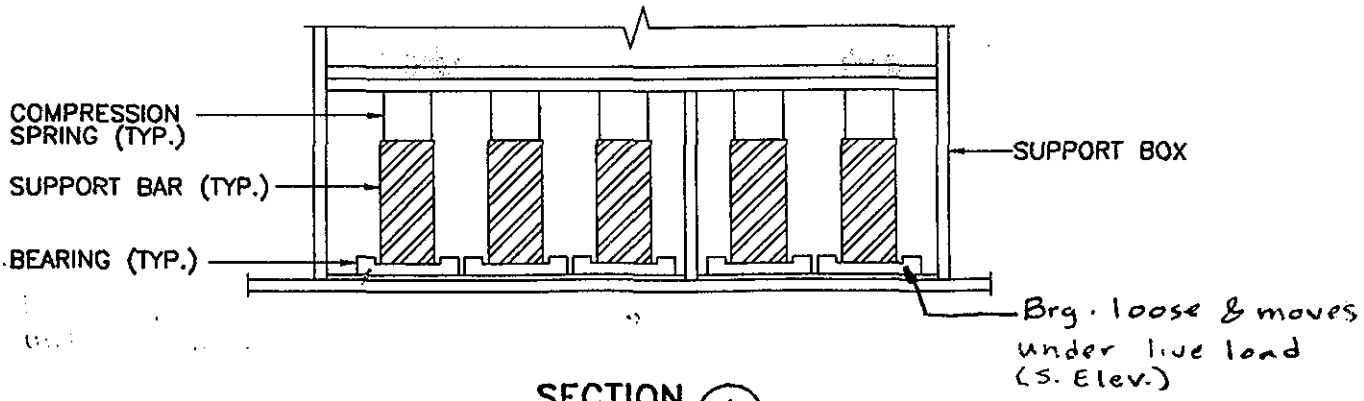

SECTION (A)

(N. Elev. shown, S. Elev. opposite hand)

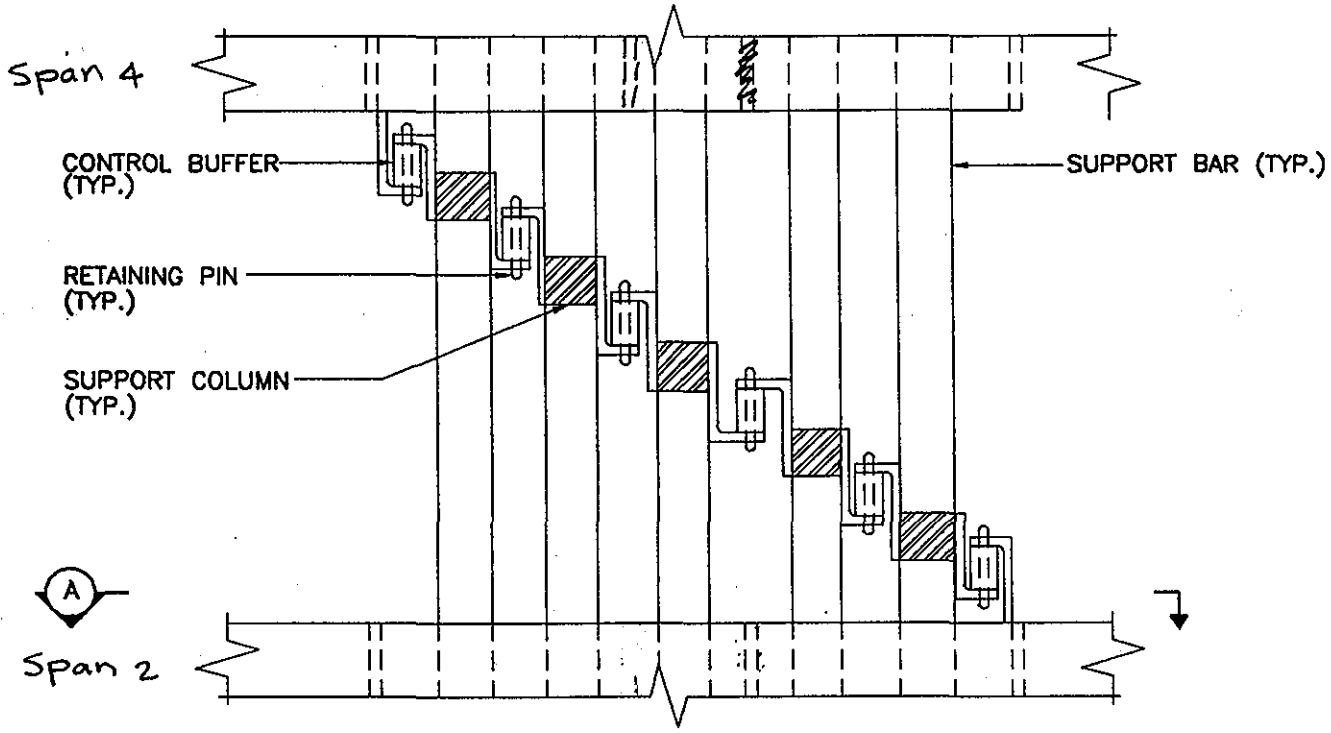

TYPICAL EXP. ASSEMBLY @ PIER 4

EL
NOTES: Assembly btwn. Str. 4 & 5 S. Elev.
FBO Span 4
(1) Signs of movement noted on all Support Bars.

DECK JOINT	
DEPARTMENT OF THE ARMY NEW ENGLAND DISTRICT CORPS OF ENGINEERS	
BOURNE HIGHWAY BRIDGE ROUTINE INSPECTION	
NOTES BY: LICHTENSTEIN CONSULTING ENGINEERS	
JOB #1986	DATE: 7/14/98
CREW: SD, EL	SHEET 4 OF 10

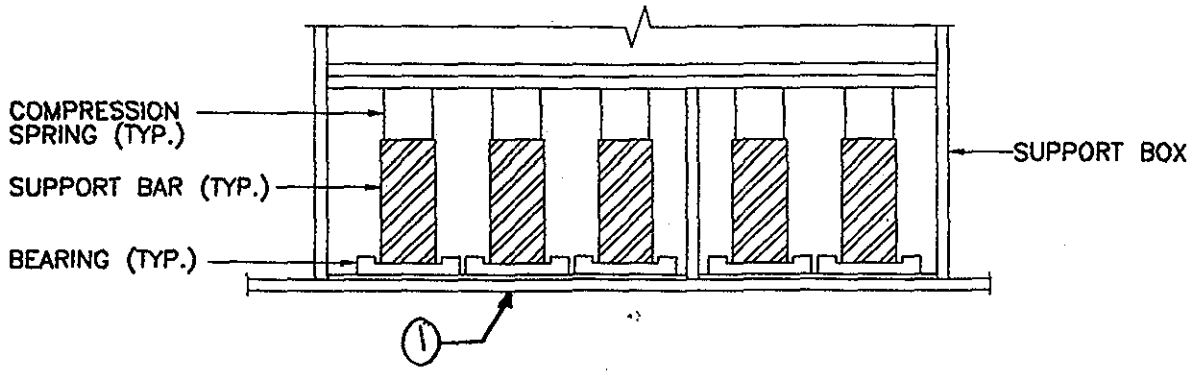

SECTION A

(N. Elev. Shown, S. Elev. opp. Hand)

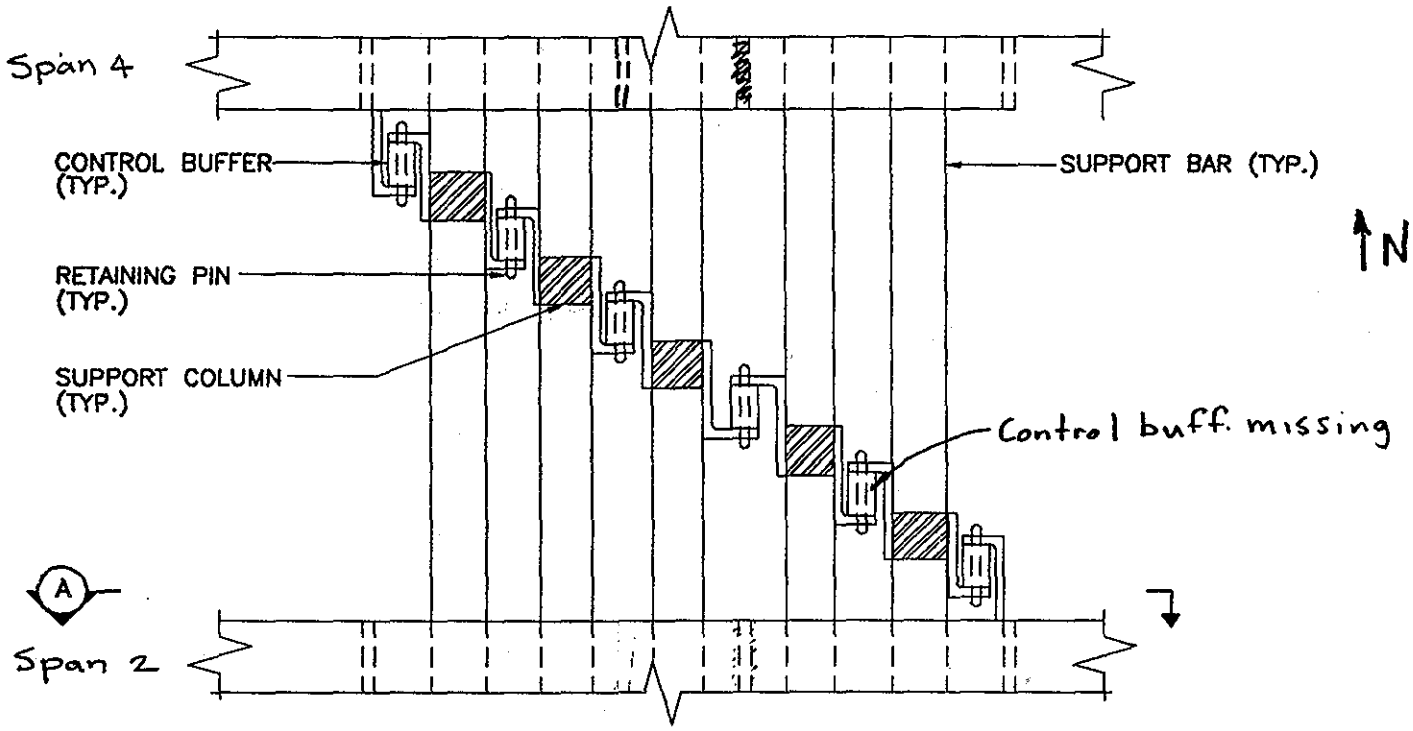

TYPICAL EXP. ASSEMBLY @ PIER 4

EL

NOTES: Assembly btwn str. 5 & 6

1. 1/8" - 3/16" IR btwn Supp. Box & Beam it sits on (Span 2 & 4) full length.
2. Signs of Exp./Contr. noted.

DECK JOINT	
DEPARTMENT OF THE ARMY NEW ENGLAND DISTRICT CORPS OF ENGINEERS	
BOURNE HIGHWAY BRIDGE ROUTINE INSPECTION	
NOTES BY: LICHTENSTEIN CONSULTING ENGINEERS	
JOB #1986	DATE: 7/14/98
CREW: SD, EL	SHEET 5 OF 10

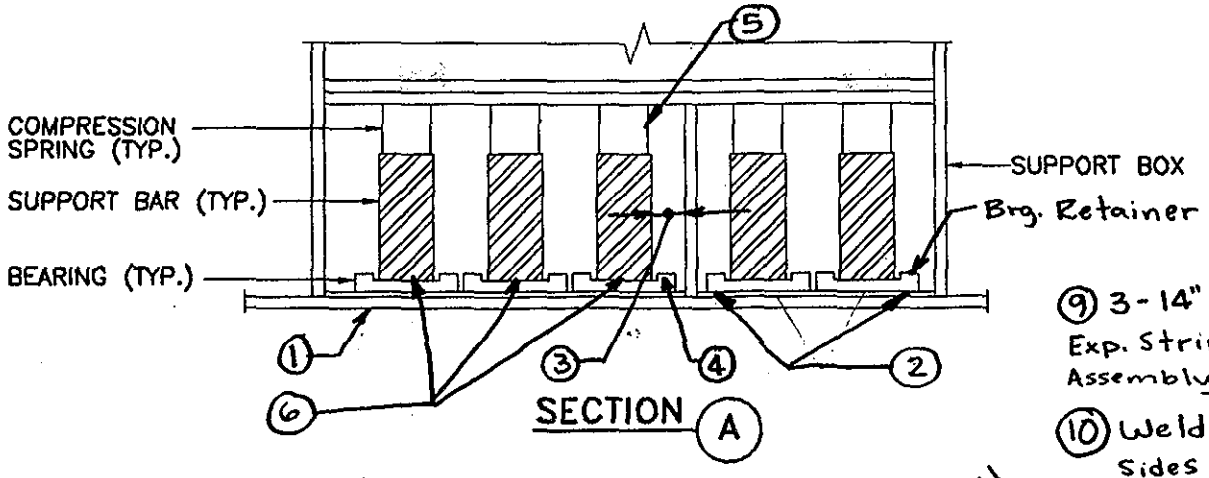

SECTION A

(N. Elev. Shown, S. Elev. opp. hand)

(9) 3-14" Holes in Exp. Strips above Assembly.

(10) Welds on 2 of 4 Sides are broken btwn. Top of Supp. Column & Deck Jt.

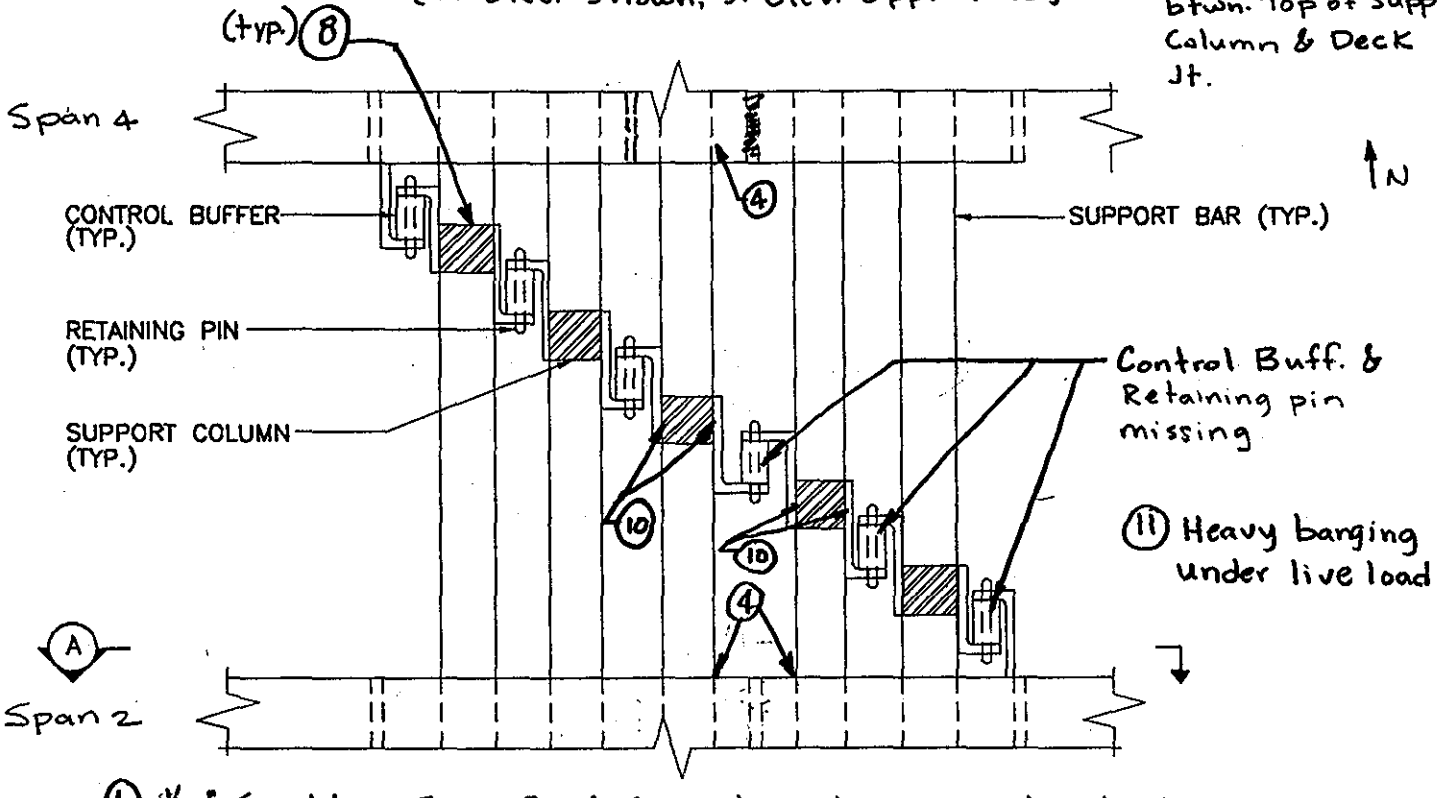

Control Buff. & Retaining pin missing

(11) Heavy banging under live load

(6) 3/16" Gap btwn Supp. Bar & Brg. which closes under live load (3 bar Group on Span 4)

TYPICAL EXP. ASSEMBLY @ PIER 4

(7) Signs of Exp. & Contr. Noted.

(8) Welds btwn. Supp. Column & Bar are typ. poor & Under cut.

EL

NOTES: Jt. Assembly btwn. Str. 6 & 7.

(1) 3/16" IR btwn Supp. Box & Beam (Span 4 only) full length.

(2) Tack welds broken Span 2 & 4

(3) 1/4" btwn Supp. box Stiff. & Supp. Bar @ Span 4 (i.e. Supp. bar is misaligned)

(4) Brg. Retainer is missing

(5) Comp. Spring attached to Supp. Box & 1/2 of Comp. Spring not in Contact w/ Supp. Bar. (Span 4)

DECK JOINT	
DEPARTMENT OF THE ARMY NEW ENGLAND DISTRICT CORPS OF ENGINEERS	
BOURNE HIGHWAY BRIDGE ROUTINE INSPECTION	
NOTES BY: LICHTENSTEIN CONSULTING ENGINEERS	
JOB #1986	DATE: 7/14/98
CREW: SD, EL	SHEET 6 OF 10

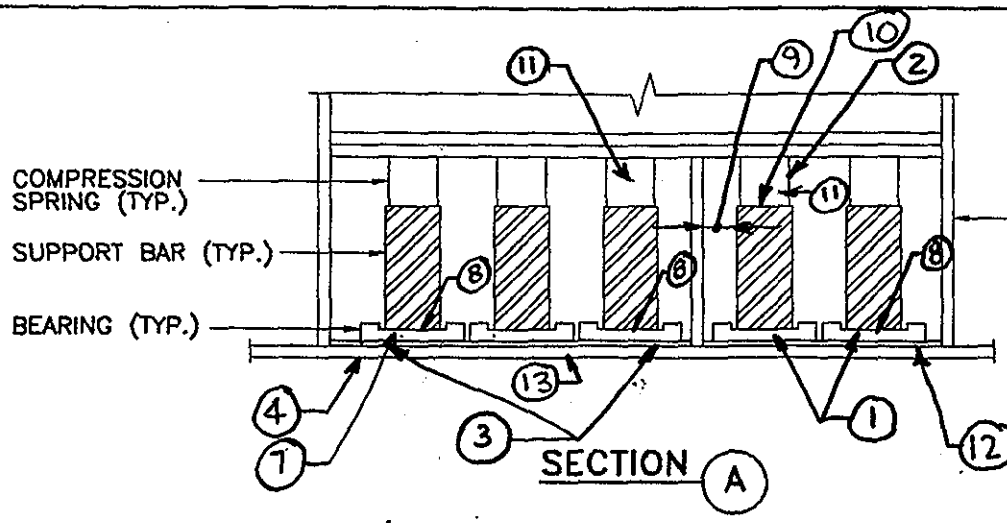

(Span 2, Shown, Span 4 opp. hand)

N. Elev.

(11) Repair Comp. Springs Span 2 & Brg.

(12) Repair PL in Place (welds ok)

(13) 1/8" IR btwn Supp. box & Beam under group of 3 Supp. bars (Span 2)

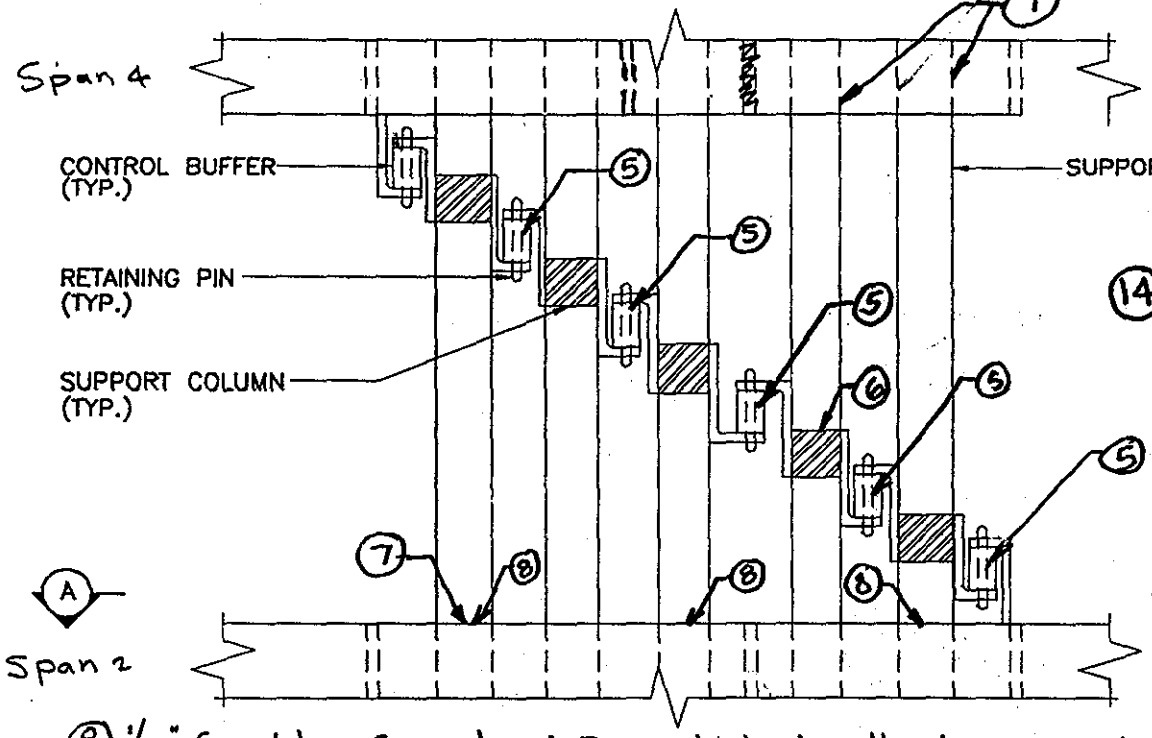

(14) 1-2" hole & 1-1" hole in Jt. Strips above assembly.

(8) 1/16" Gap btwn. Supp. bar & Brg. which doesn't close under live load. (Span 2)

(9) Supp. bar. misaligned with 3/4" Gap btwn bar & Supp. box stiff. (Span 2)

TYPICAL EXP. ASSEMBLY @ PIER 4

(10) 1/4" Gap btwn Compr. Spring & Supp. bar (Span 2)

EL

NOTES: Jt. Assembly btwn. Str. 7 & 8

(1) Brg's & PL below are missing. (Span 4) (2) Comp. Spring missing (Span 4)

(3) Tack Welds broken Span 4 & Span 2

(4) 1/8" IR btwn Supp. Box & Beam Full Length (Span 4)

(5) Cont. Buff. & pin missing

(6) Welds @ Top of Column broken w/ 1/4" Gap which Closes under heavy Live Load.

(7) Brg. broken & loose (Span 2)

DECK JOINT	
DEPARTMENT OF THE ARMY NEW ENGLAND DISTRICT CORPS OF ENGINEERS	
BOURNE HIGHWAY BRIDGE ROUTINE INSPECTION	
NOTES BY: LICHTENSTEIN CONSULTING ENGINEERS	
JOB #1986	DATE: 7/14/98
CREW: SD, EL	SHEET 7 OF 10

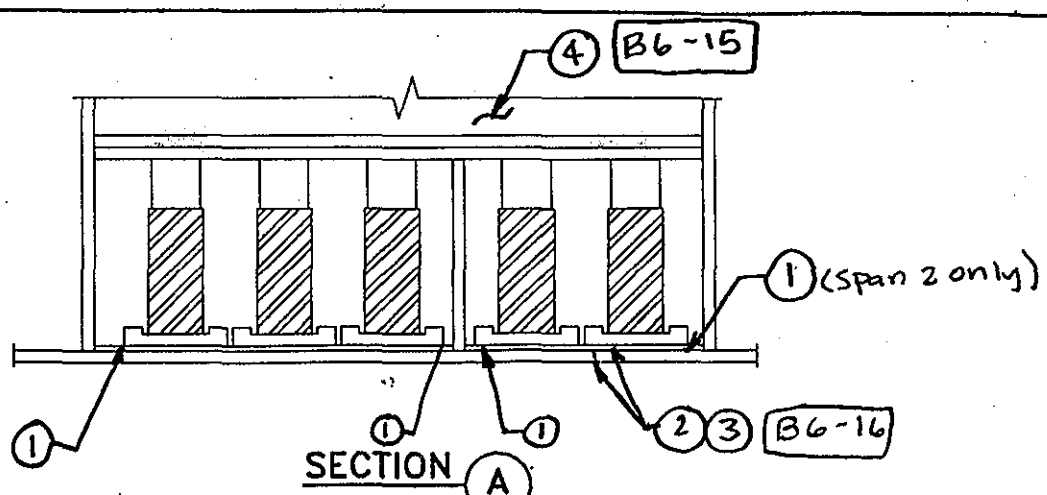

SECTION A

(Span 2 Shown, N. Elev., Span 4 opp. hand)

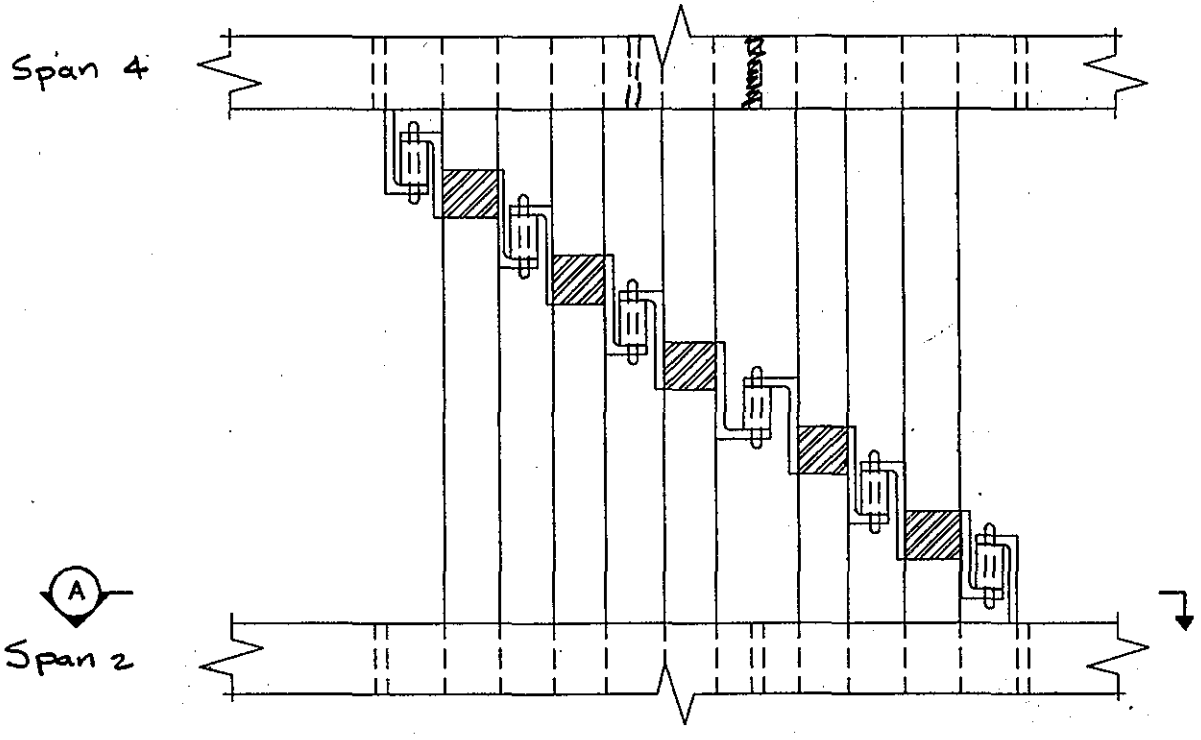

TYPICAL EXP. ASSEMBLY @ PIER 4

EL
NOTES: Jt. Assembly btwn. Str. 8 & 9

1. Tack Weld broken (Span 4) [All 4 broken Span 2]
2. 1/8" IR Btwn PL & Supp. box And Supp. box & Beam Under Group of 2 Bars (Span 4) [1/2" IR under 3 Bar Span 4]
3. Similar Cond. As note 2 For Span 2 - 1/2" IR Full Len.
4. Heavy Rust Above Supp. Box Span 2
5. Signs of movement noted on all bars

DECK JOINT	
DEPARTMENT OF THE ARMY NEW ENGLAND DISTRICT CORPS OF ENGINEERS	
BOURNE HIGHWAY BRIDGE ROUTINE INSPECTION	
NOTES BY: LICHTENSTEIN CONSULTING ENGINEERS	
JOB #1986	DATE: 7/14/98
CREW: SD, EL	SHEET 8 OF 10

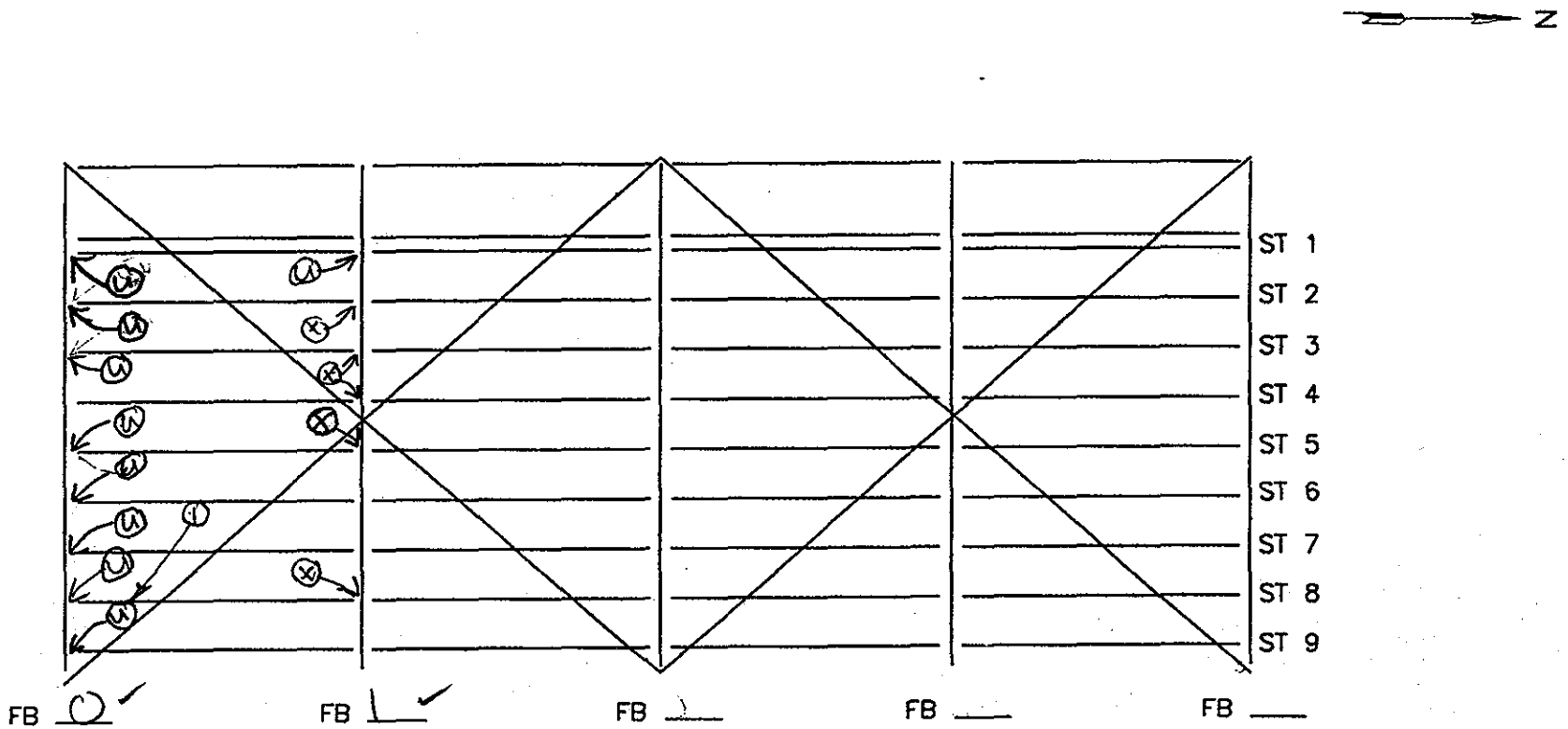

SPAN 4

NOTES: ① Light Rust on Bot FL 12" long beginning 18" from FB

FLOOR SYSTEM	
DEPARTMENT OF THE ARMY NEW ENGLAND DISTRICT CORPS OF ENGINEERS	
BOURNE HIGHWAY BRIDGE ROUTINE INSPECTION	
NOTES BY: LICHTENSTEIN CONSULTING ENGINEERS	
JOB #1986	DATE: 7/9/98
CREW: FL, MM	SHEET 2 OF 11

101
227

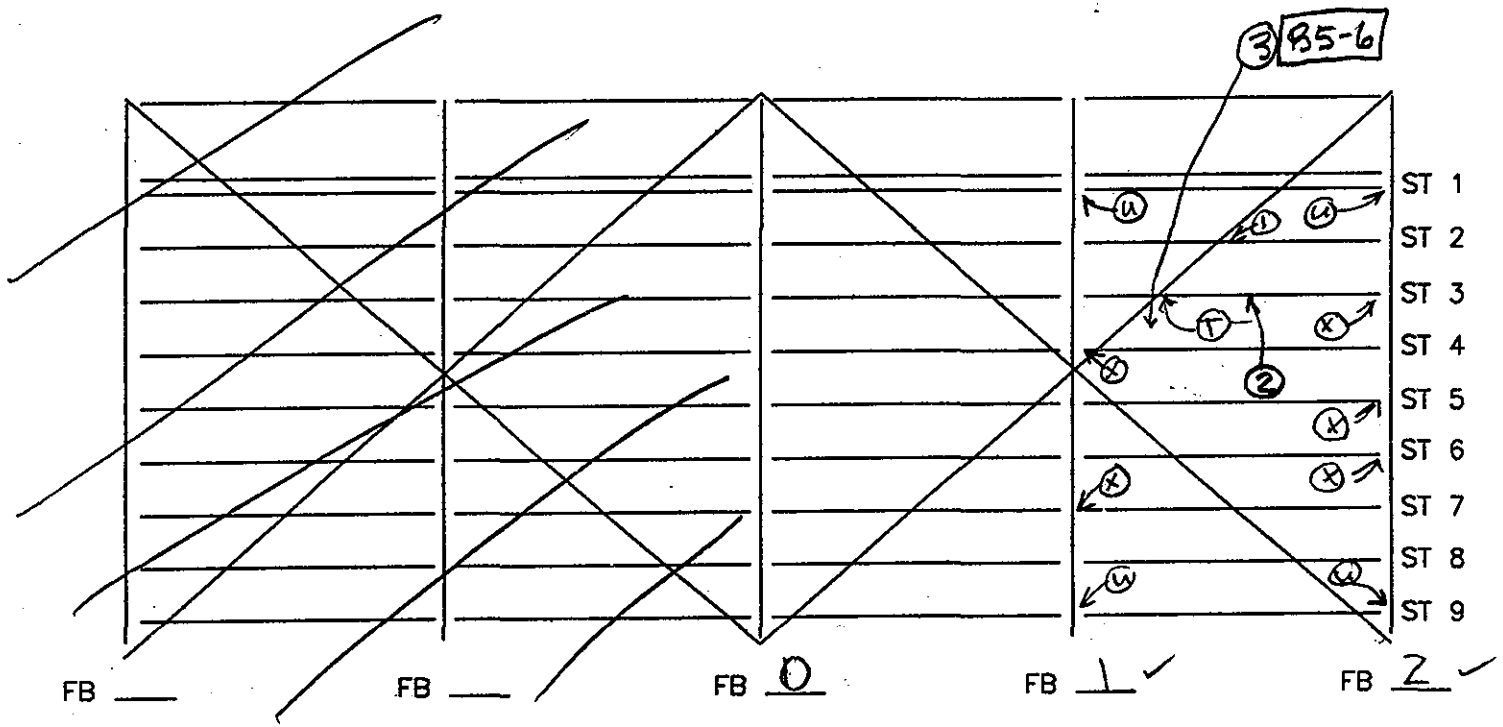

SPAN 4

NOTES: ① 3/4" Ø Drilled holes, 12" center to Center W Top FL of STR Full length
② 1/8" deep 1" Ø Pitting @ 113" and 137" FROM FLBM 1 ON TOP OF E. BOT FL
③ loose Fasteners Btwn Catwalk railing & Railing Support

FLOOR SYSTEM	
DEPARTMENT OF THE ARMY NEW ENGLAND DISTRICT CORPS OF ENGINEERS	
BOURNE HIGHWAY BRIDGE ROUTINE INSPECTION	
NOTES BY: LICHTENSTEIN CONSULTING ENGINEERS	
JOB #1986	DATE: 7/6/98
CREW: 8 MM	SHEET 9 OF 11

102
227

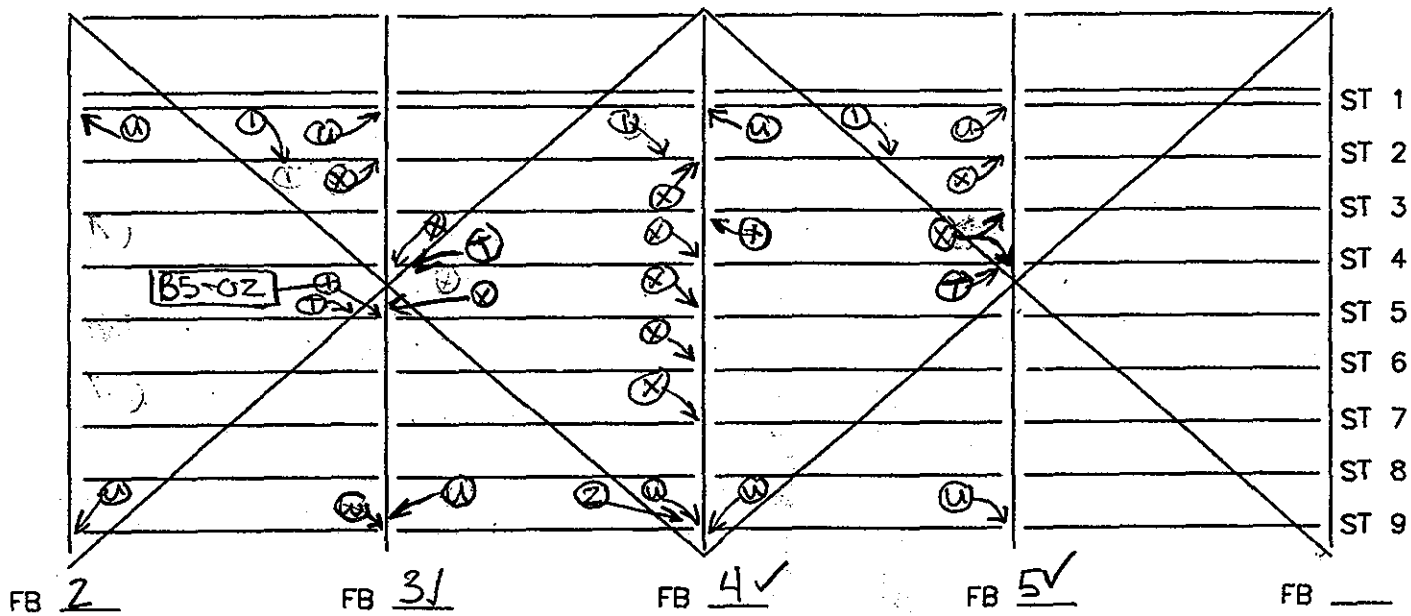

SPAN 4

NOTES: ① 3/4" ϕ holes drilled holes 12" center to center W/ Top FL Full length
② Repair Channel bolted to STR. Str Bot FL 1/16th remaining, @ end tapering to full section at 21.
③ Lite Rust Top FL of STR & Deck Pan @ Drainage Pipe

FLOOR SYSTEM	
DEPARTMENT OF THE ARMY NEW ENGLAND DISTRICT CORPS OF ENGINEERS	
BOURNE HIGHWAY BRIDGE ROUTINE INSPECTION	
NOTES BY: LICHTENSTEIN CONSULTING ENGINEERS	
JOB #1986	DATE: 7/8/98
CREW: EL, MM	SHEET 6 OF 11

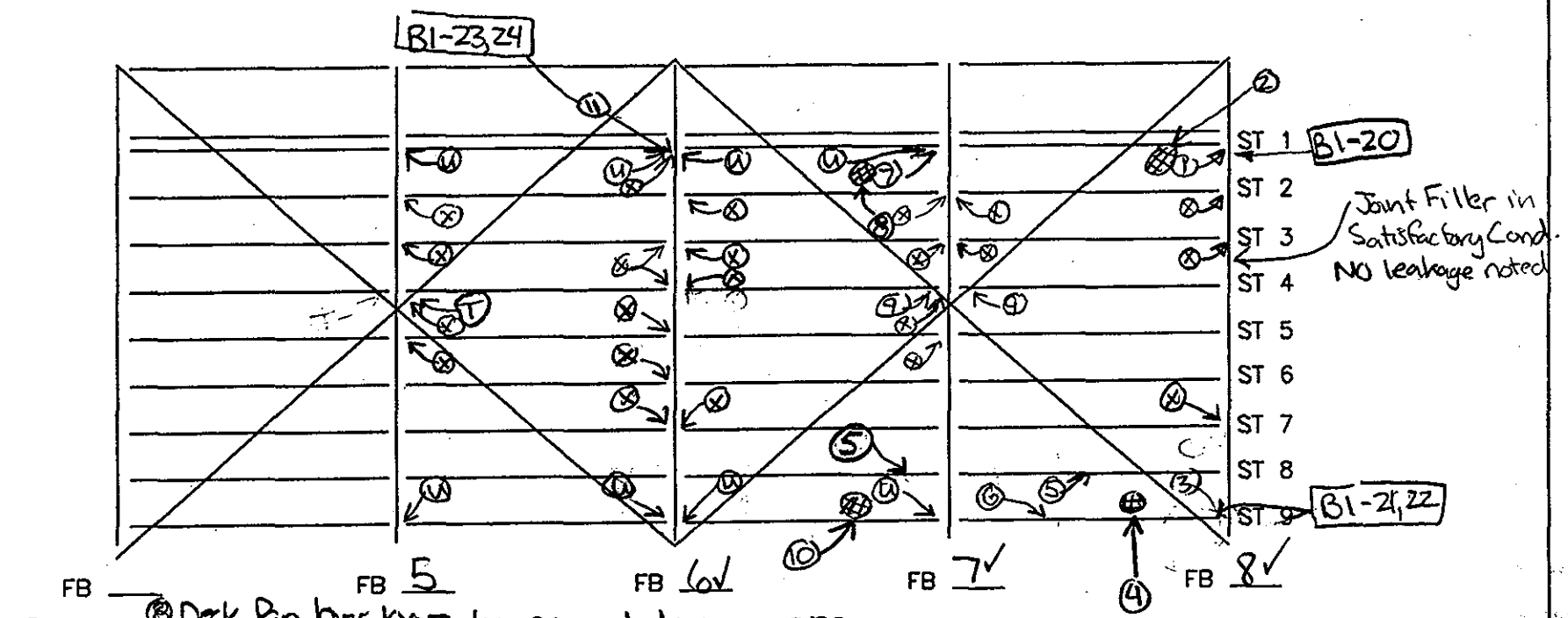

(T) = ⑧ Deck Pan has 100% loss around drainage pipe
⑨ Coping of catwalk railing & OSL & 3/8" of vert leg around lateral bracing
⑩ Deck Pan has heavy rust and Pin holes around drainage Pipe
⑪ 1/8" deep x 2" High x 1" wide divot in connection ∡ @ 2nd Fastner From Top through STRGR

Note: Water observed dripping APPROX. 4" N of Drain Pipe @ ④

SPAN 4

NOTES:
① STRGR 1 Heavy Rust 1/16" loss x 3" wide x 4' long ℄ Bot FL @ FB, Plus ℄ 3' long ℄ Top FL beginning 1' from FB
② Deck Pan with Heavy Rust & Pin holes around drainage Pipe
③ STR 9 @ FB ① Repair Channel bolted to STRGR Web, STRGR Bot FL 100% loss @ FB For 6" tapering to Full section over 1'
④ Rust on Deck Pan around drain pipe
⑤ STRGR 8 3/4" ϕ Drilled holes 12" center to center ℄ Top FL, Full length
⑥ SIM 5 W Top FL STRGR 9
⑦ Heavy Rust with 1/16" loss x 2" wide x 2' long, begins 6' from FB, ℄ top FL STRGR 1

FLOOR SYSTEM	
DEPARTMENT OF THE ARMY NEW ENGLAND DISTRICT CORPS OF ENGINEERS	
BOURNE HIGHWAY BRIDGE ROUTINE INSPECTION	
NOTES BY: LICHTENSTEIN CONSULTING ENGINEERS	
JOB #1986	DATE: 7/8/98
CREW: EL, MM	SHEET 4 OF 11

227 104

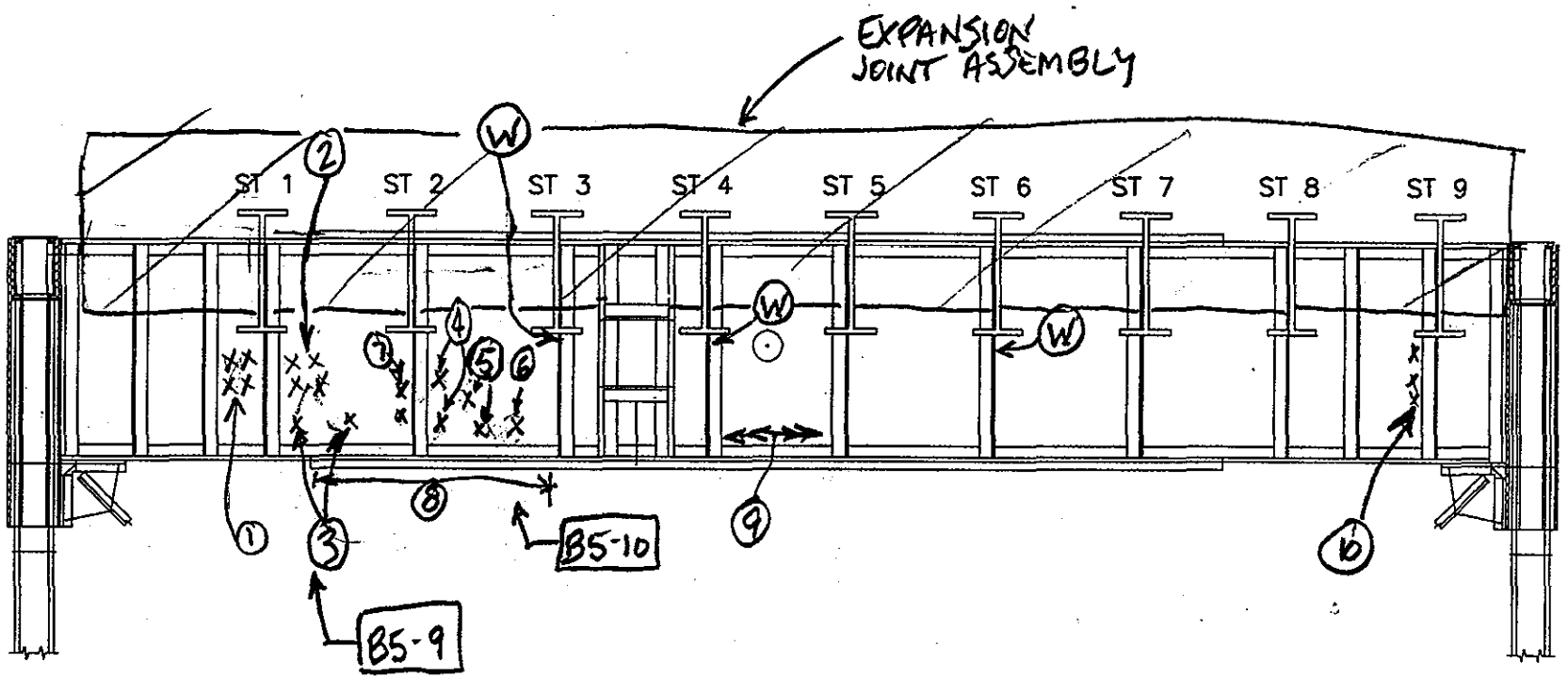

(10) 1/8" Pitting x 33" ↕ on web along stiffener.

SPAN 4
FLOORBEAM 0 S ELEV.

EL NOTES:
(1) 1/4" Pitting x 4" ↔ x 24" ↕
(2) 1/8" Pitting x 10" Ø
(3) 1/8" " x 4" Ø
(4) 1/16" " x 6" Ø
(5) 1/8" " x 3" Ø
(6) 1/16" " x 12" ↔ x 4" ↕
(7) 3/16" " x 18" ↕ x 6" ↔
(8) 1/8" " x 3/4" WIDE ON TOP OF COV. PL
(9) FTUB OF FLAME CUT PL 1/2" ABOVE BOT FL x FULL LENGTH

FLOORBEAM ELEVATION	
DEPARTMENT OF THE ARMY NEW ENGLAND DISTRICT CORPS OF ENGINEERS	
BOURNE HIGHWAY BRIDGE ROUTINE INSPECTION	
NOTES BY: LICHTENSTEIN CONSULTING ENGINEERS	
JOB #1986	DATE: 7.9.98
CREW: EL MM	SHEET 4 OF 11

105
227

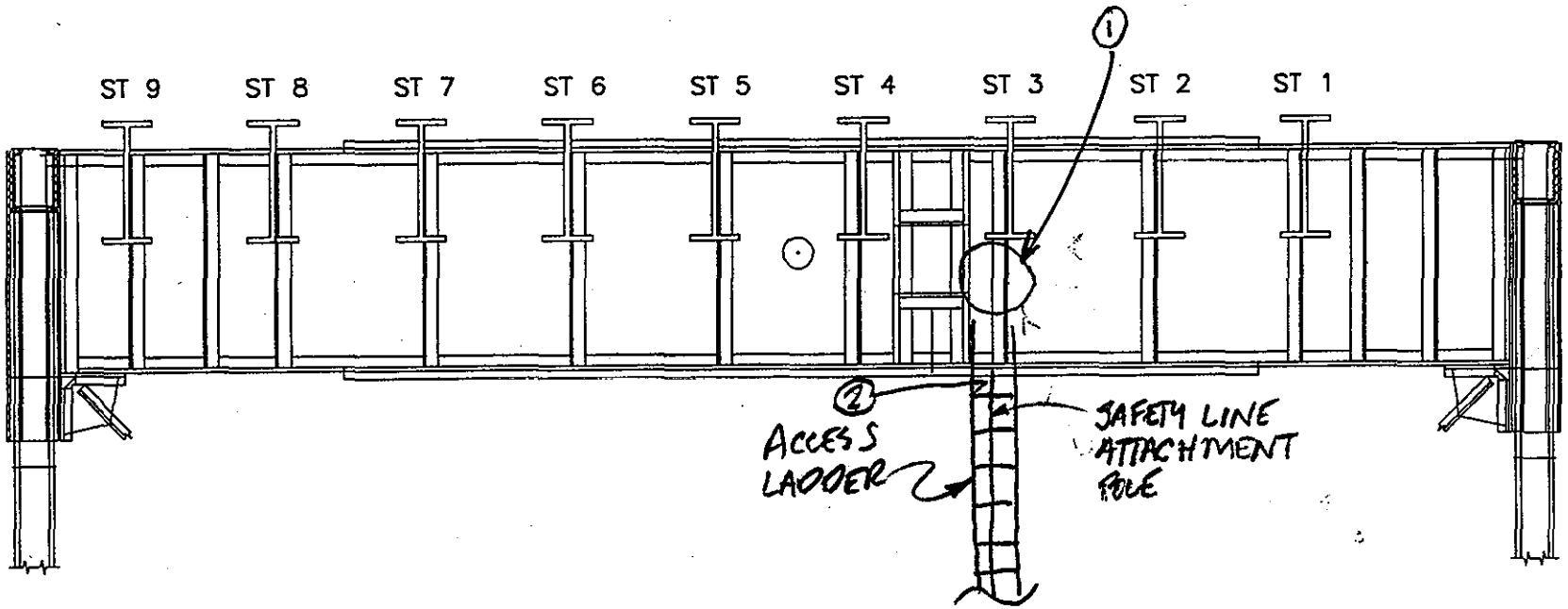

SPAN 4
FLOORBEAM C N ELEV.

EL
NOTES: 1 access lader support & catwalk railing & welded to web sim FB01 N SPAN 6
2 Safty line attachment pole loose & vibrating under live load

FLOORBEAM ELEVATION	
DEPARTMENT OF THE ARMY NEW ENGLAND DISTRICT CORPS OF ENGINEERS	
BOURNE HIGHWAY BRIDGE ROUTINE INSPECTION	
NOTES BY: LICHTENSTEIN CONSULTING ENGINEERS	
JOB #1986	DATE: 7/9/98
CREW: EL MM	SHEET 3 OF 11

106
227

Mark on steel "Carnegie USA"

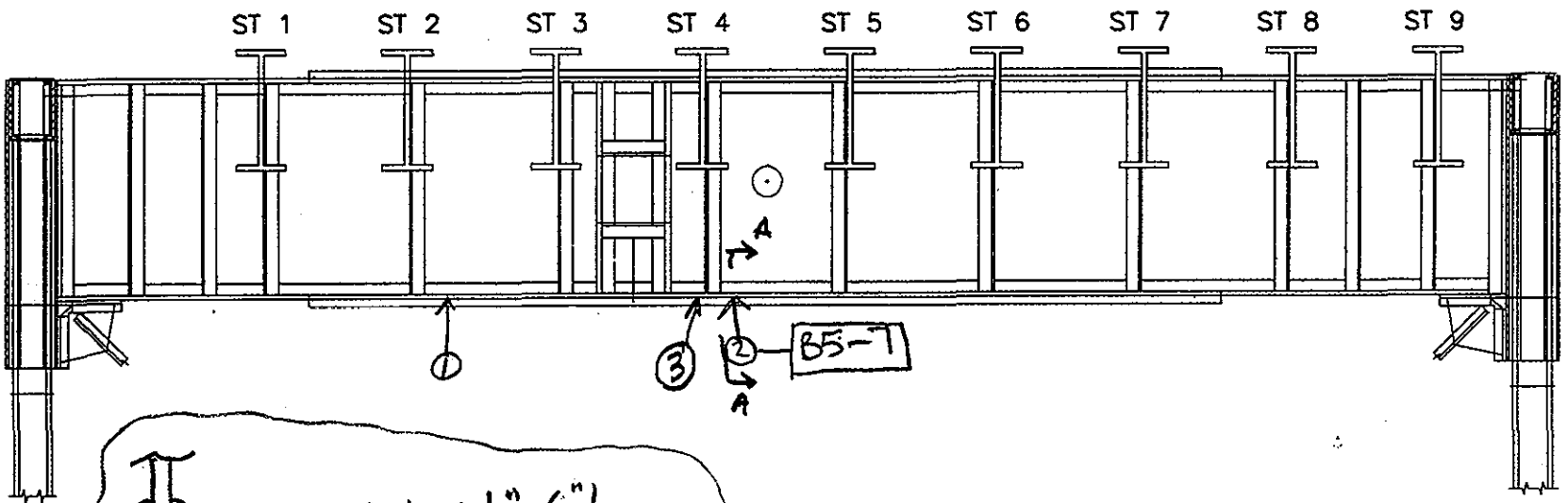

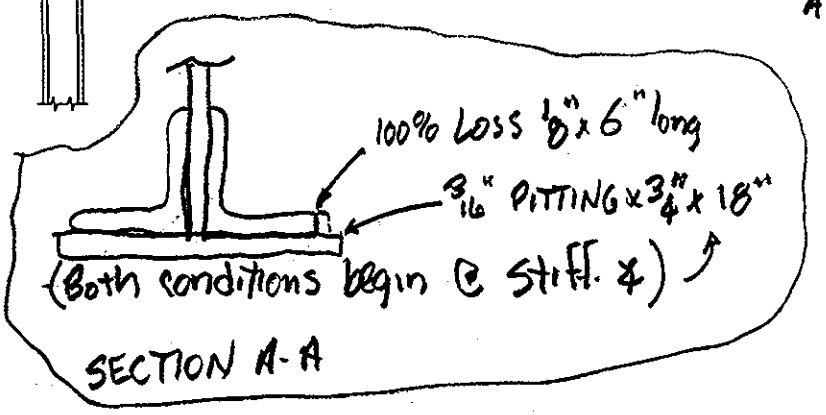

SPAN 4
FLOORBEAM 1 S ELEV.

EL
NOTES: ① IR 1/4" x 5" + 1/8" pitting x 3/4" ↔ x 5" long on Top of Bot Cov. PL
② See Section A-A
③ IR 3/8" x 6" + 1/16" PITTING x 3/4" WIDE x 8" LONG ON TOP OF BOT. COV. PL

FLOORBEAM ELEVATION

DEPARTMENT OF THE ARMY
NEW ENGLAND DISTRICT CORPS OF ENGINEERS

BOURNE HIGHWAY BRIDGE
ROUTINE INSPECTION

NOTES BY: LICHTENSTEIN
CONSULTING ENGINEERS

JOB #1986 DATE: 7/9/98
CREW: EL, MM SHEET 11 OF 11

107
227

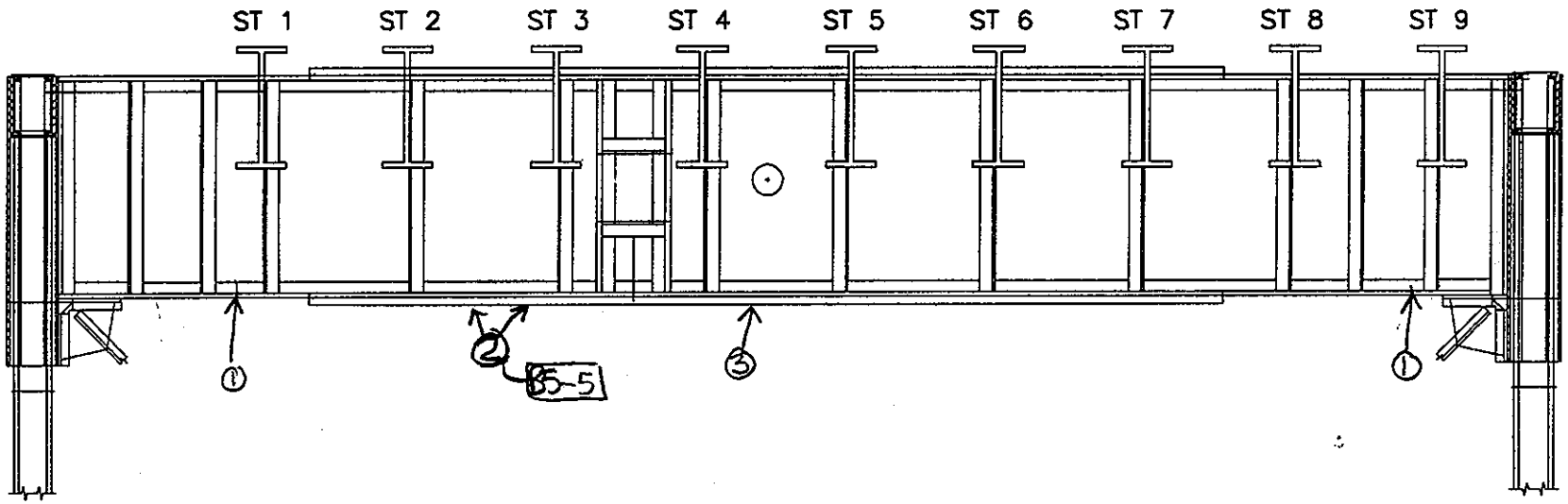

108
227

SPAN 4
FLOORBEAM 2 S ELEV.

EL
NOTES: ① 1/8" Pitting x 4" ↔ x 12" long Top of Bot FL
② IR 1/2" thick x 7" long
③ IR 1/2" thick x 5" long

FLOORBEAM ELEVATION	
DEPARTMENT OF THE ARMY NEW ENGLAND DISTRICT CORPS OF ENGINEERS	
BOURNE HIGHWAY BRIDGE ROUTINE INSPECTION	
NOTES BY: LICHTENSTEIN CONSULTING ENGINEERS	
JOB #1986	DATE: 7/8/98
CREW: EL MM	SHEET 10 OF 11

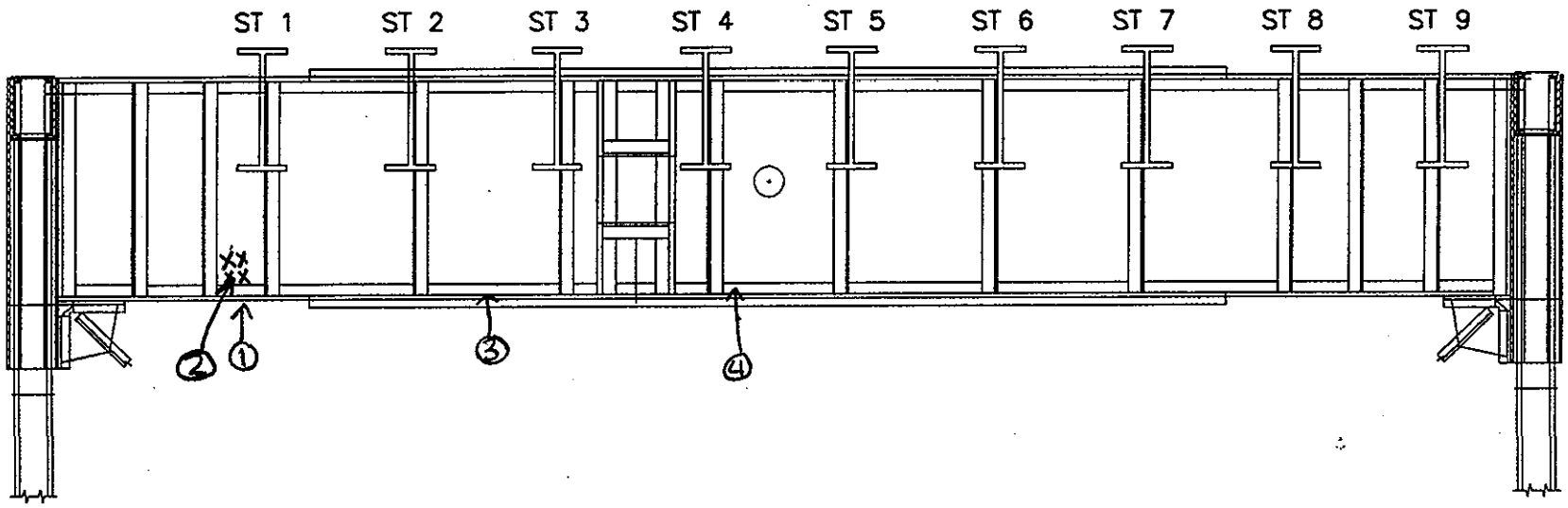

SPAN 4
FLOORBEAM 3 S ELEV.

EL
NOTES: ① 1/8" pitting x 3" ⌀ Top of Bot Fl + 1/8" Pitting x 2" ↕ x 12" long on vert leg of Bot Fl
② 1/8" pitting x 2" ↕ x 16" long on web
③ 1/8" to 3/16" Pitting x 3/4" ↔ x 6" long on Cov. PL.
④ 1/8" Pitting x 3/4" ↔ x 16" long on Cov PL

FLOORBEAM ELEVATION	
DEPARTMENT OF THE ARMY NEW ENGLAND DISTRICT CORPS OF ENGINEERS	
BOURNE HIGHWAY BRIDGE ROUTINE INSPECTION	
NOTES BY: LICHTENSTEIN CONSULTING ENGINEERS	
JOB #1986	DATE: 7/8/98
CREW: EL, MM	SHEET 8 OF 11

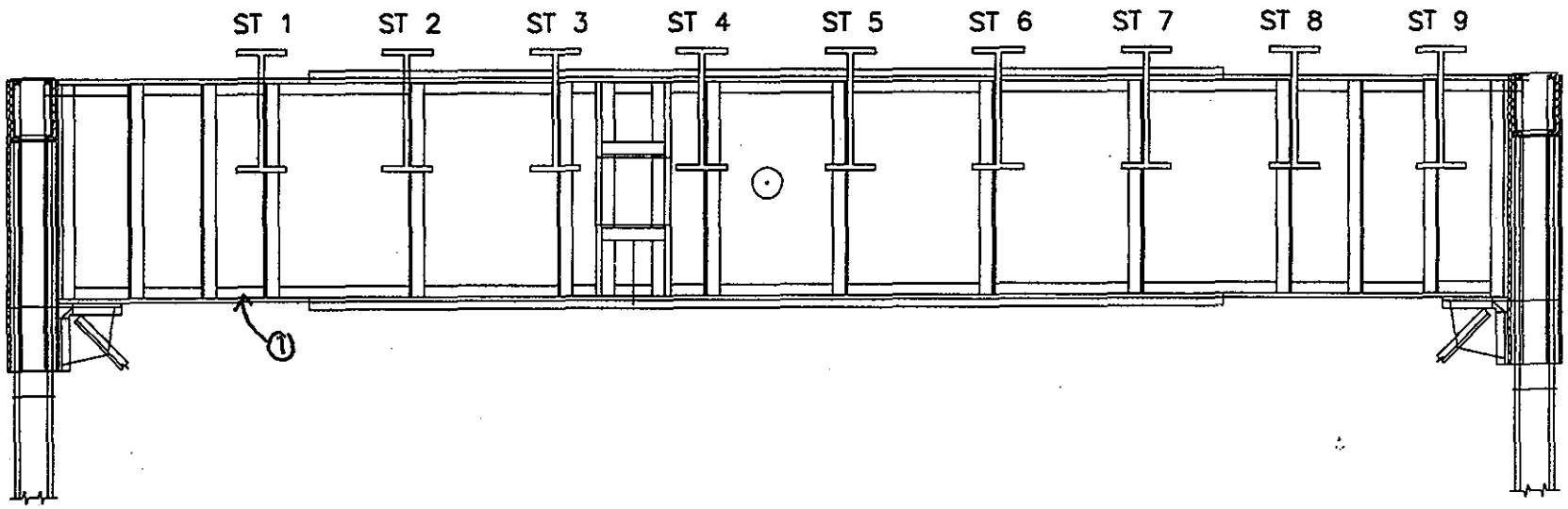

L22 110

SPAN 4
FLOORBEAM 4 S ELEV.

EL
NOTES: 1 1/8" Pitting x 3" ϕ Top of Bot FL

FLOORBEAM ELEVATION

DEPARTMENT OF THE ARMY
NEW ENGLAND DISTRICT CORPS OF ENGINEERS

BOURNE HIGHWAY BRIDGE
ROUTINE INSPECTION

NOTES BY: LICHTENSTEIN
CONSULTING ENGINEERS

JOB #1986 DATE: 7/8/98
CREW: EL, MM SHEET 11 OF 11

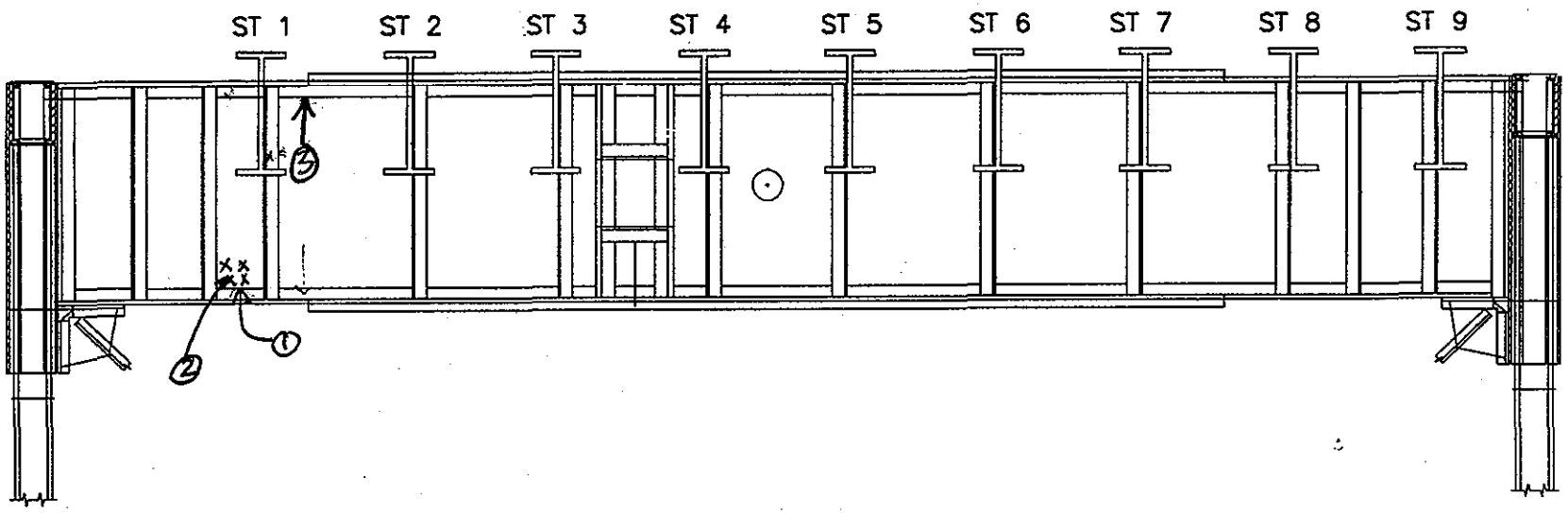

SPAN 4
FLOORBEAM 5 S ELEV.

EL
NOTES: ① 1/8" Pitting x 6" Ø Top of Bot FL
② " " x 3" ↕ x 12" ↔ on web
③ 1/16" Pitting x 6" ↔ x 18" long Bot of top FL

FLOORBEAM ELEVATION	
DEPARTMENT OF THE ARMY NEW ENGLAND DISTRICT CORPS OF ENGINEERS	
BOURNE HIGHWAY BRIDGE ROUTINE INSPECTION	
NOTES BY: LICHTENSTEIN CONSULTING ENGINEERS	
JOB #1986	DATE: 7/8/98
CREW: EL, MM	SHEET 7 OF 11

227

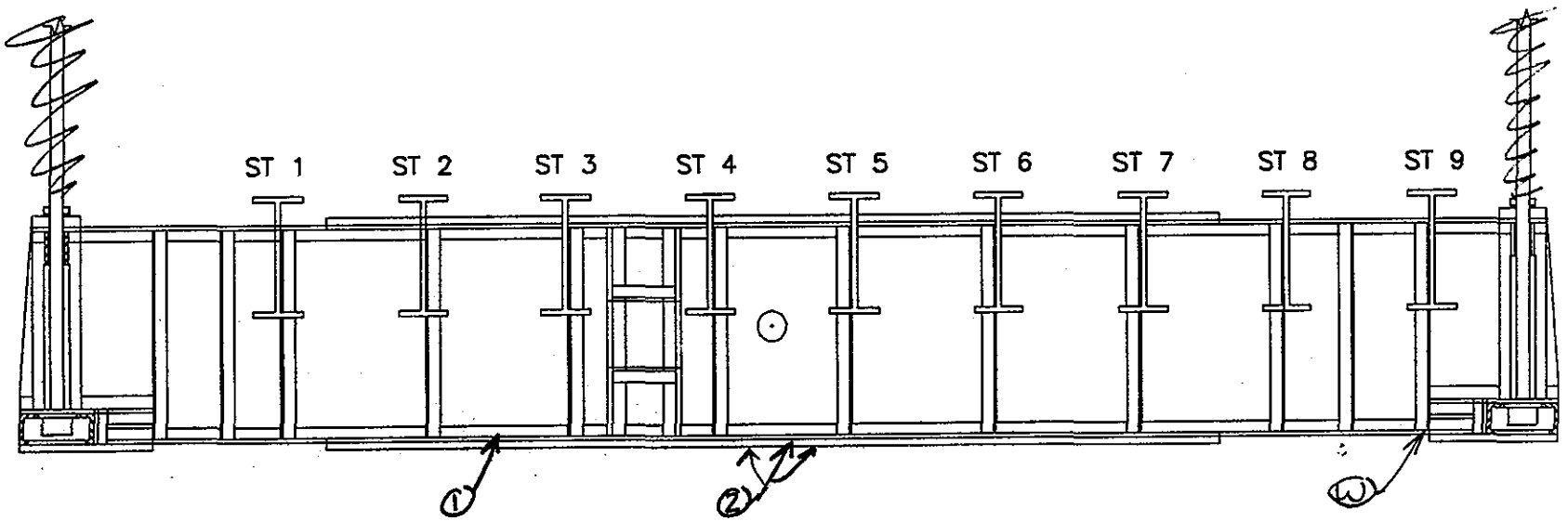

112
227

SPAN 4
FLOORBEAM 7 S ELEV.

EL
NOTES: ① 1/8" to 3/16" Pitting x 3/4" x 18" long on top of cov. PL
② 1/8" Pitting x 3/4" ø on top of cov PL

FLOORBEAM ELEVATION

DEPARTMENT OF THE ARMY
NEW ENGLAND DISTRICT CORPS OF ENGINEERS

BOURNE HIGHWAY BRIDGE
ROUTINE INSPECTION

NOTES BY: LICHTENSTEIN
CONSULTING ENGINEERS

JOB #1986 DATE: 7/8/98
CREW: EL, MM SHEET 5 OF 11

NOTE: No strgrs. this elev.

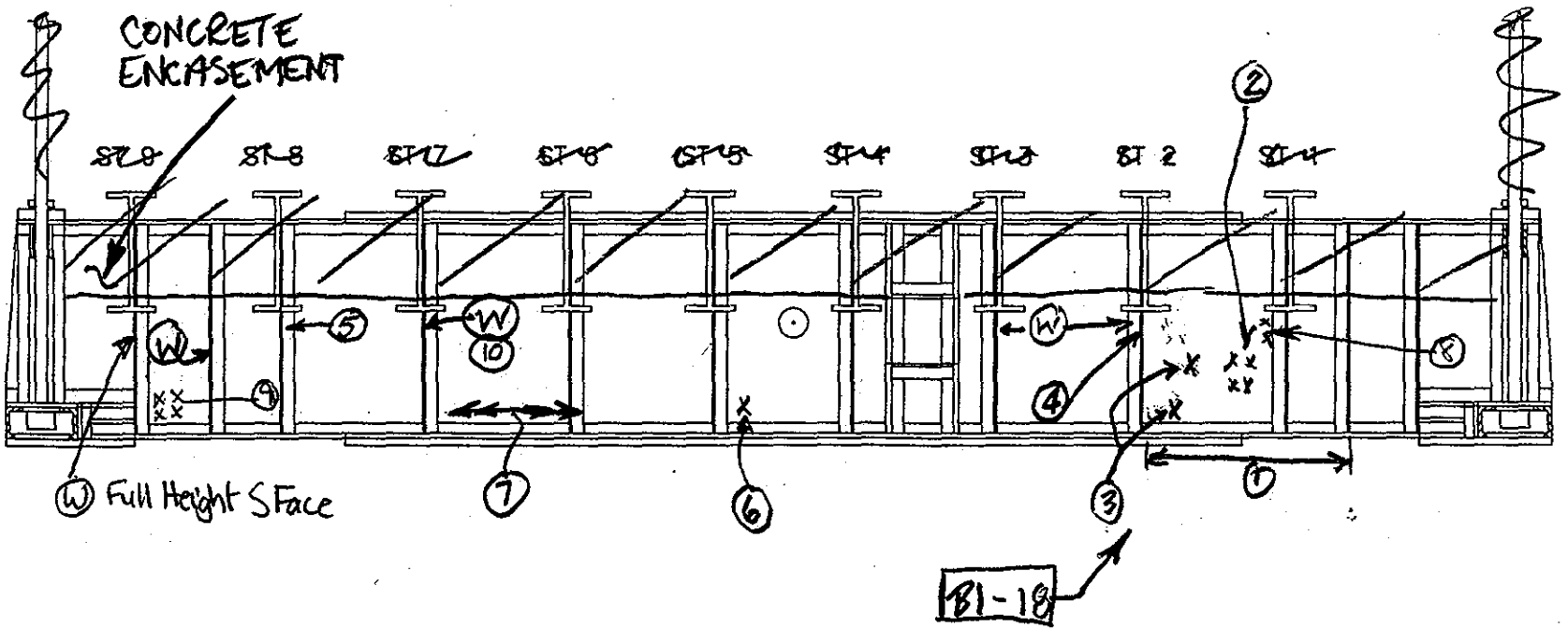

(10) SIM (5), 1/16"-1/8"

SPAN 4
FLOORBEAM 8 N ELEV.

EL NOTES: (1) Hvy RUST ON BOT FL, NO LOSSES
(2) 1/8" PITTING x 2' Ø
(3) 1/8-3/16" " x 6" Ø
(4) 1/8" " x FULL WIDTH x 3" ↑ ON STIFF ∡ OSL
(5) 1/8-3/16" " " x 4" ↕ " " "
(6) 1/16" " x 4" Ø
(7) SIM (1) FBD, S. ELEV., SPAN 6
(8) 1/16" Pitting x 4" Ø + 1/16" Pitting x 2" wide x 8" high (in same vert line) (S Face of FB)
(9) 1/8" " x 4" Ø 2 [illegible] + 1/16" deep pitting x 4" Ø (S Face of FB, same vert. line)

FLOORBEAM ELEVATION

DEPARTMENT OF THE ARMY
NEW ENGLAND DISTRICT CORPS OF ENGINEERS

BOURNE HIGHWAY BRIDGE
ROUTINE INSPECTION

NOTES BY: LICHTENSTEIN
CONSULTING ENGINEERS

JOB #1986 | DATE: 7-8-98
CREW: MM, FL | SHEET 3 OF 11

113
227

⑦ ℄ catwalk railing ∡ coped around FB lateral bracing. ∡ OSL & top 3/8" of ∡ vertical leg removed

⑧ Pitting on STRGR, ℄ web 1/16" deep x 3" wide x 10" high @ FB connection

⑨ LOOSE GRATING PANEL ON CATWALK

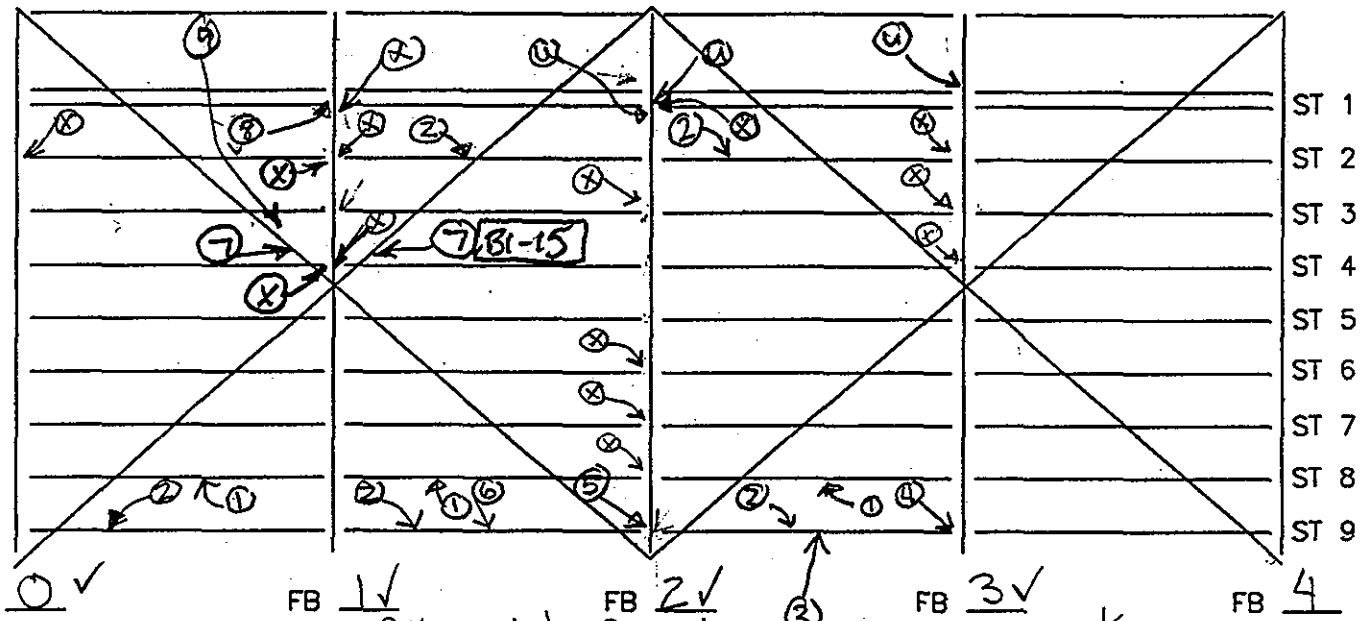

⑤ 1/16" to 1/8" pitting x 2" wide full height of west web @ FB connection; 1/8" x 2" high x 8" wide

Pitting on east web @ FB connection

⑥ 1/16" pitting x 3" wide x 8' long Bot of W top FL @ MID SPAN; 1/8" pitting x 2" high x 2' long West web @ mid span + 1/8" pitting x 2" wide x 6" high west web @ MID span + 1/8" pitting x 3" wide x 2' long Top of W Bot FL @ MID SPAN

SPAN 6

NOTES: ① 3/4" Ø Hole 12" c-c, ℄ FL Full length

② SIM ① WEST FL

③ 1/16" to 1/8" pitting by Full width x 8' long, Bot of ℄ top FL @ MID SPAN; 1/8" pitting by 2' high x 12" long, ℄ web @ MID SPAN; 1/8" pitting 2" wide x 12" long on top of Bot FL @ mid span; 1/16" to 1/8" pitting x 4' long by Full width top of west Bot FL @ MID SPAN; 1/16" pitting x Full wide Bot of Top W Bot FL - 3' high x 12" wide on web @ MID SPAN

④ 1/8" PITTING x 4" WIDE x 16" high + 1/4" to hole through pitting 4" wide x 6" high west face of STRGR along connection ∡. RPR PL welded to ℄ web 8" high x 12" wide x 5/8" thick

FLOOR SYSTEM	
DEPARTMENT OF THE ARMY NEW ENGLAND DISTRICT CORPS OF ENGINEERS	
BOURNE HIGHWAY BRIDGE ROUTINE INSPECTION	
NOTES BY: LICHTENSTEIN CONSULTING ENGINEERS	
JOB #1986	DATE: 7/7/98
CREW: EL, MM	SHEET 5 OF 6

227 114

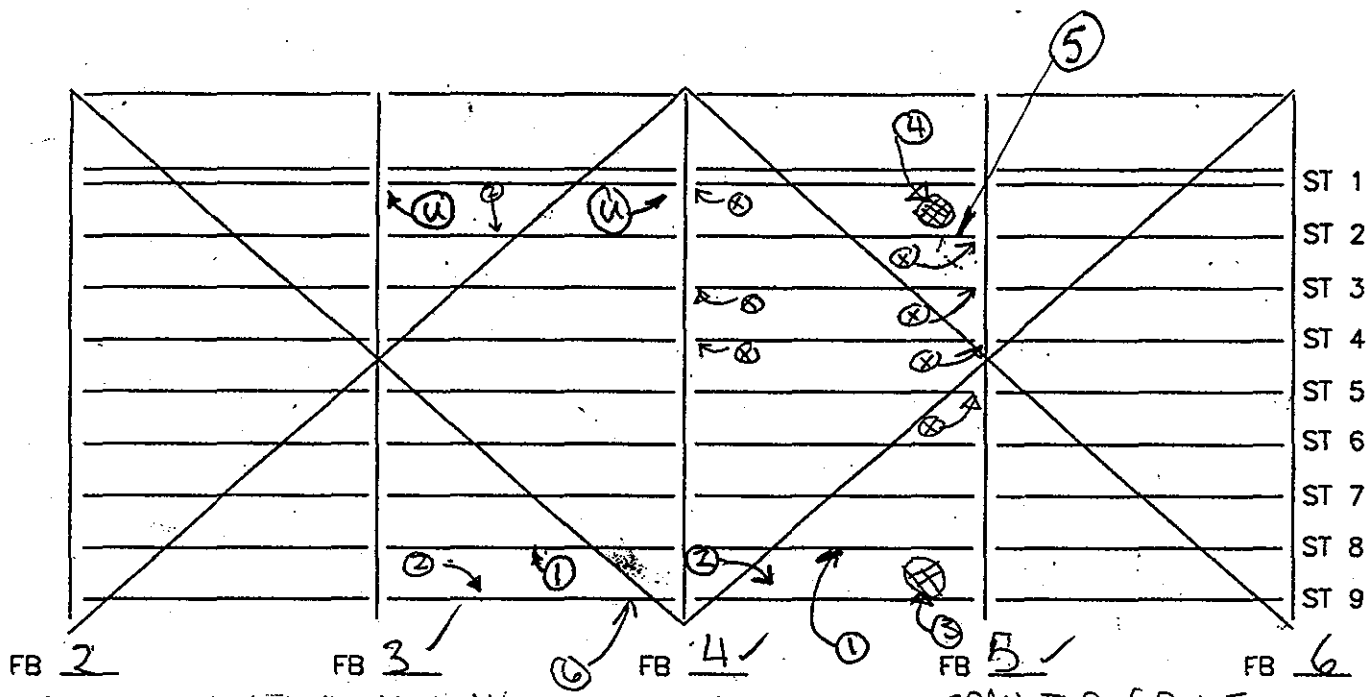

⑥-CONT: 1/16" to 1/8" pitting by 3" wide x 12" long @ MID SPAN TOP of Bot FL

② 1/16" to 1/8" [illegible] WIDTH x 5' BEGINNING [illegible]

⊗ [illegible]

Ⓨ FLAME CUT CODE

③ 1" [illegible]

④ [illegible]

⑤ [illegible] PAN STM

SPAN 6

NOTES: ① 3/4" Ø Hole 12" C-C, & FL Full length

② STM ① WEST FL

③ lite rust on DECK PAN Scupper DRAIN

④ Heavy Rust in Deck Pan with 100% loss 6" x 18" @ Scupper DRAIN

⑤ Heavy Rust with 1/16" loss x 3' long, & Bot FL @ FB

⑥ & ELEV: 1/16" to 1/8" deep pitting x 6' long @ MID SPAN, Full width Bot of top FL; 1/8" to 3/16" pitting by 3" high x 6' long beginning at FB 4; 1/16" to 1/8" pitting by full width of Bot FL x 6' long beginning @ FB 4;

West Elev: 1/16" to 1/8" pitting by 7' long beginning @ Mid Span going N, Full width Bot at top FL

FLOOR SYSTEM	
DEPARTMENT OF THE ARMY NEW ENGLAND DISTRICT CORPS OF ENGINEERS	
BOURNE HIGHWAY BRIDGE ROUTINE INSPECTION	
NOTES BY: LICHTENSTEIN CONSULTING ENGINEERS	
JOB #1986	DATE: 7/7/98
CREW: EL, MM	SHEET 3 OF 6

1/5
227

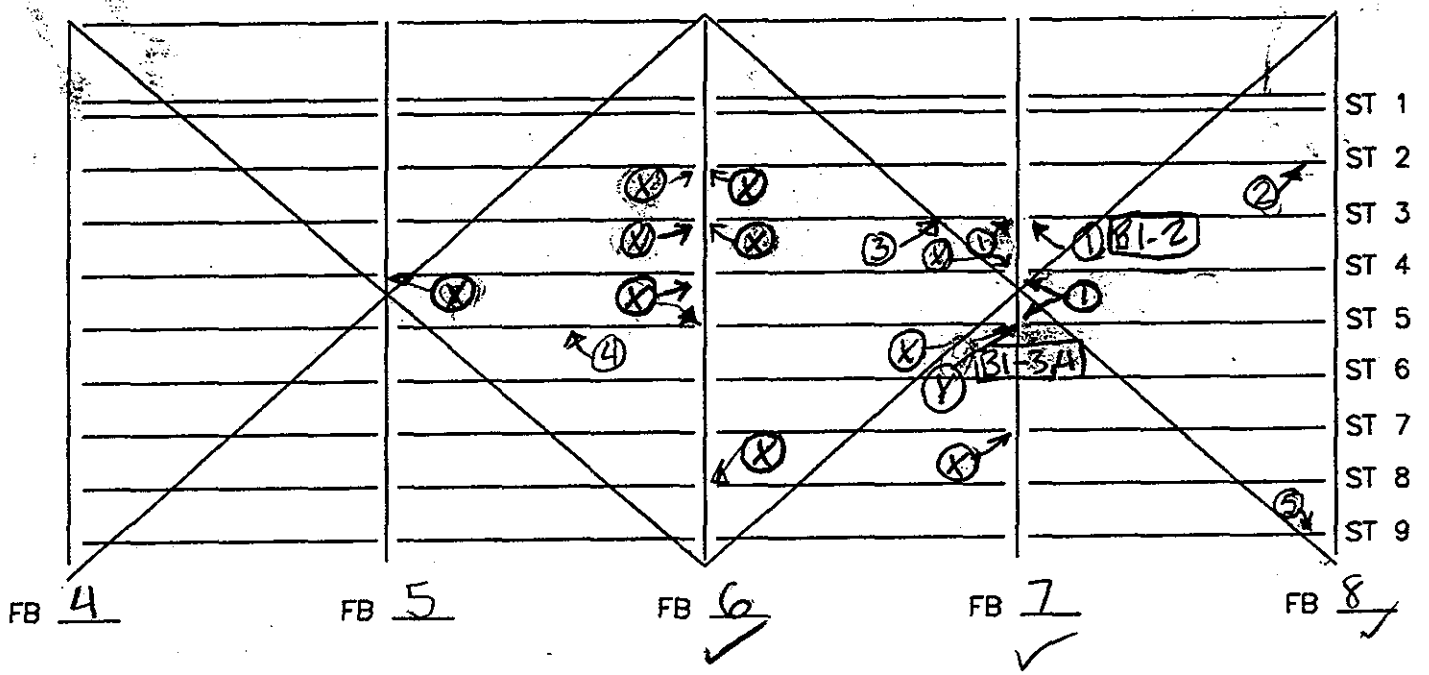

SPAN 6

NOTES: (1) STRGR BOT FL COPED 12"x3", JAGGED EDGE CUT
STRGR 1 BOT FL 1/16 to 1/8" Pitting full width x 5' beginning @ FB 8
(2) STRGR 2 E side 1/16" Pitting 9" long by 4" wide @ 4' from FB 8 - deck Pan
with heavy rust, 100% tost by 2" Ø @ DRAINAGE PIPE
(X) = ABRASION DUST BTWN STRGR BOT FL & STIFF ∡
(Y) FLAME CUT COPE IN STRGR WEB @ FB TOP FLANGE
(3) 1" Ø hole in STRGR 3 E BOT FL 8' from FB 7 (Drilled hole)
(4) Lite Rust top FL Full length FB 5-6
(5) SIM (2), PITTING ON W FL STRGR 9, DECK PAN SIM

FLOOR SYSTEM	
DEPARTMENT OF THE ARMY NEW ENGLAND DISTRICT CORPS OF ENGINEERS	
BOURNE HIGHWAY BRIDGE ROUTINE INSPECTION	
NOTES BY: LICHTENSTEIN CONSULTING ENGINEERS	
JOB #1986	DATE: 7/6/98
CREW: EL, MM	SHEET 1 OF 1

(227/911)

Note: No Bot Cover PL on Bot FL of FB O, Top FL not visible encased in concrete
· No Strgrs this elev.

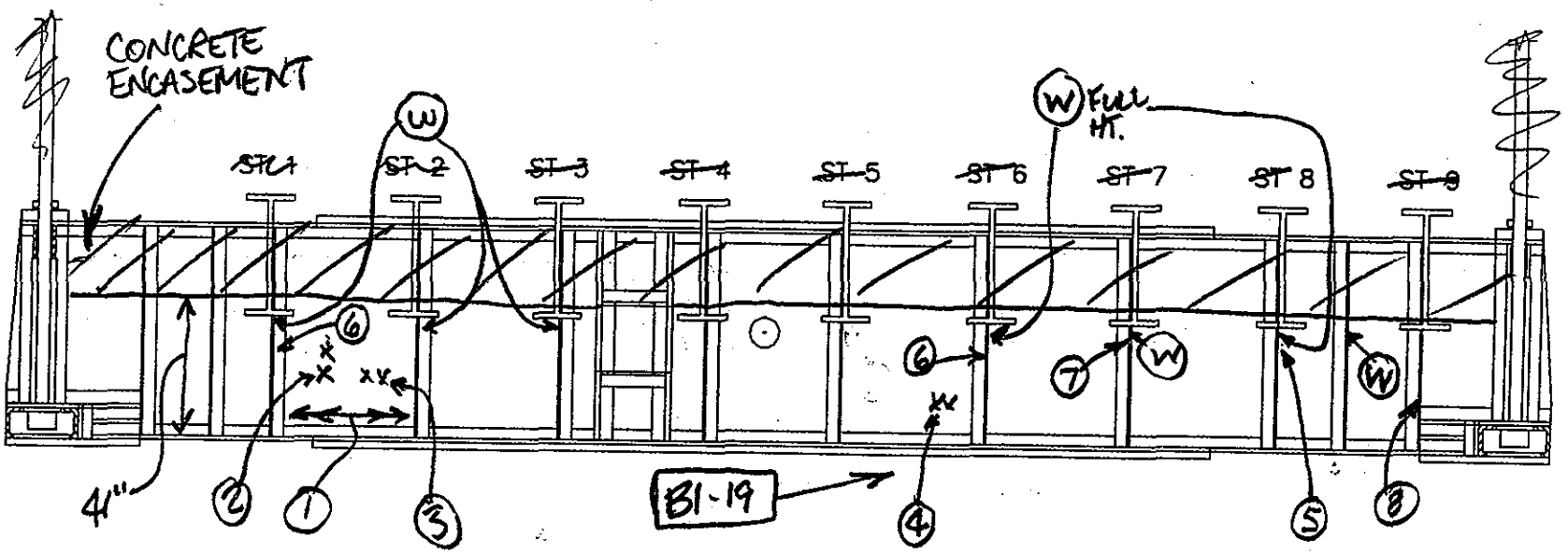

SPAN +6
FLOORBEAM O S ELEV.

NOTES: ① Stub of FLame cut PL Full length of FB 1/2" above Bot FL & vert leg
② 1/16-1/8" PITTING 4" Ø
③ 1/8" " 2" ↕ × 8" ↔
④ 1/8-3/16" " × 2" Ø
⑤ 1/8-3/16" " FULL WIDTH × 60% OF HT. OF ORIG. STIFF & OSL
⑥ 1/8" " × 2" WIDE × 75% " " " "
⑦ 1/8" " × FULL WIDTH × 12" ↕ @ TOP " " "
⑧ " " × 3" Ø, 3 LOCATIONS ON STIFF & OSL

FLOORBEAM ELEVATION	
DEPARTMENT OF THE ARMY NEW ENGLAND DISTRICT CORPS OF ENGINEERS	
BOURNE HIGHWAY BRIDGE ROUTINE INSPECTION	
NOTES BY: LICHTENSTEIN CONSULTING ENGINEERS	
JOB #1986	DATE: 7·8·98
CREW: MM, E1	SHEET 2 OF 11

117
227

Note: No Bot cover PL, Top FL not visible, encased in CONCRETE

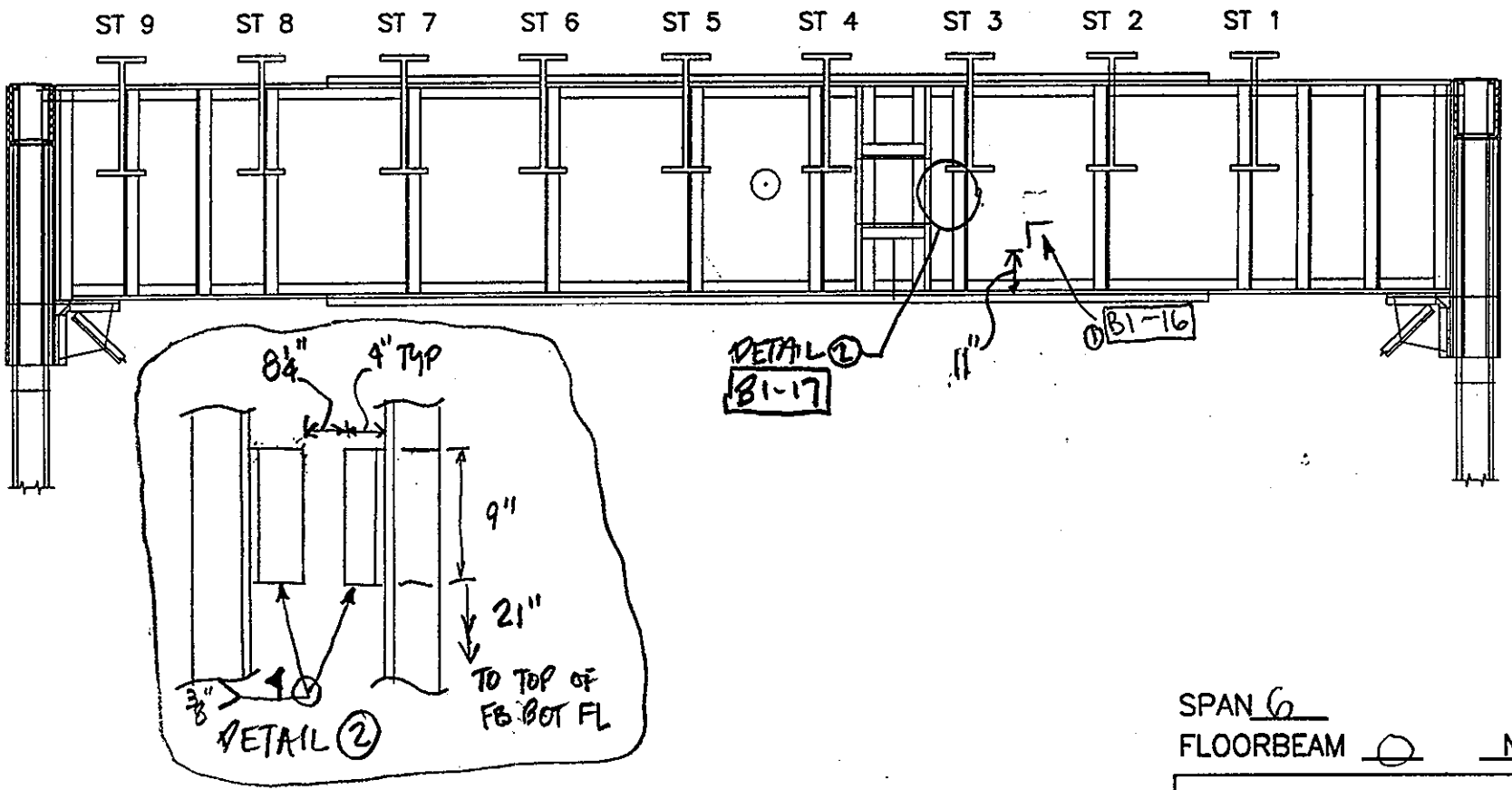

SPAN 6

FLOORBEAM ⌀ N ELEV.

NOTES: ① 2" V x 2½" H ∡ welded to FB web (welded all around)

② 9" x 3½" PL welded to FB web (" " ") PL t = ½"

FLOORBEAM ELEVATION	
DEPARTMENT OF THE ARMY NEW ENGLAND DISTRICT CORPS OF ENGINEERS	
BOURNE HIGHWAY BRIDGE ROUTINE INSPECTION	
NOTES BY: LICHTENSTEIN CONSULTING ENGINEERS	
JOB #1986	DATE: 7/8/98
CREW: EI MM	SHEET 1 OF 11

118
227

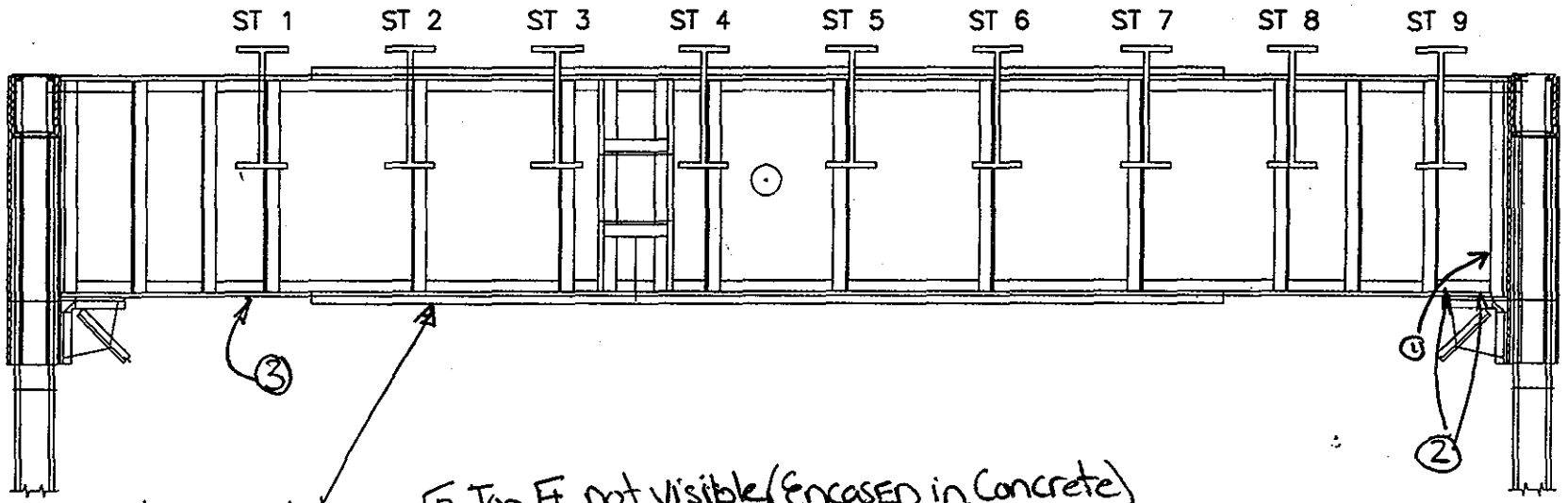

Note: No cover plate on FB, Top FL not visible (Encased in Concrete)

227
119

SPAN 6
FLOORBEAM 3 S ELEV.

NOTES: ① 3/8" Deep x 3" Ø Pitting, on LWB
② 1/8" Deep x 2" Ø Pitting on Top of Bot FL
③ 3/16" Deep x 4" Ø Pitting on Top of Bot FL

FLOORBEAM ELEVATION

DEPARTMENT OF THE ARMY
NEW ENGLAND DISTRICT CORPS OF ENGINEERS

BOURNE HIGHWAY BRIDGE
ROUTINE INSPECTION

NOTES BY: LICHTENSTEIN
CONSULTING ENGINEERS

JOB #1986 | DATE: 7/7/98
CREW: EL, MM | SHEET 6 OF 6

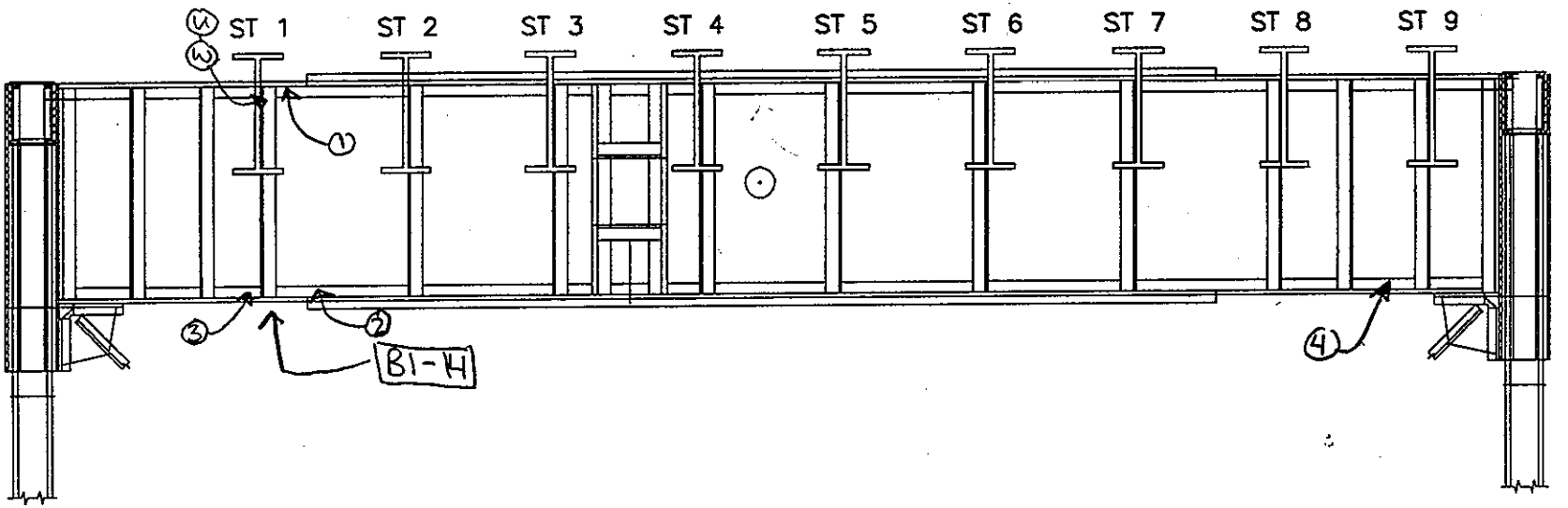

SPAN 6
FLOORBEAM 4 S ELEV.

NOTES:
(1) 1/8" Pitting X Full WIDTH of FL (see B1-14)
(2) 1/8" Pitting X 4" x 12" long on top of Bot FL (see B1-14)
(3) SIM (2), 16" long
(W) 5" x 1/2" PL variable length weld to stiffner & OSL
(4) Bolted STRGR/FB CONN
(4) 1/8" x 2" wide x 8" long, Pitting - top of FB Bot FL

FLOORBEAM ELEVATION	
DEPARTMENT OF THE ARMY NEW ENGLAND DISTRICT CORPS OF ENGINEERS	
BOURNE HIGHWAY BRIDGE ROUTINE INSPECTION	
NOTES BY: LICHTENSTEIN CONSULTING ENGINEERS	
JOB #1986	DATE: 7/7/98
CREW: EL, MM	SHEET 4 OF 6

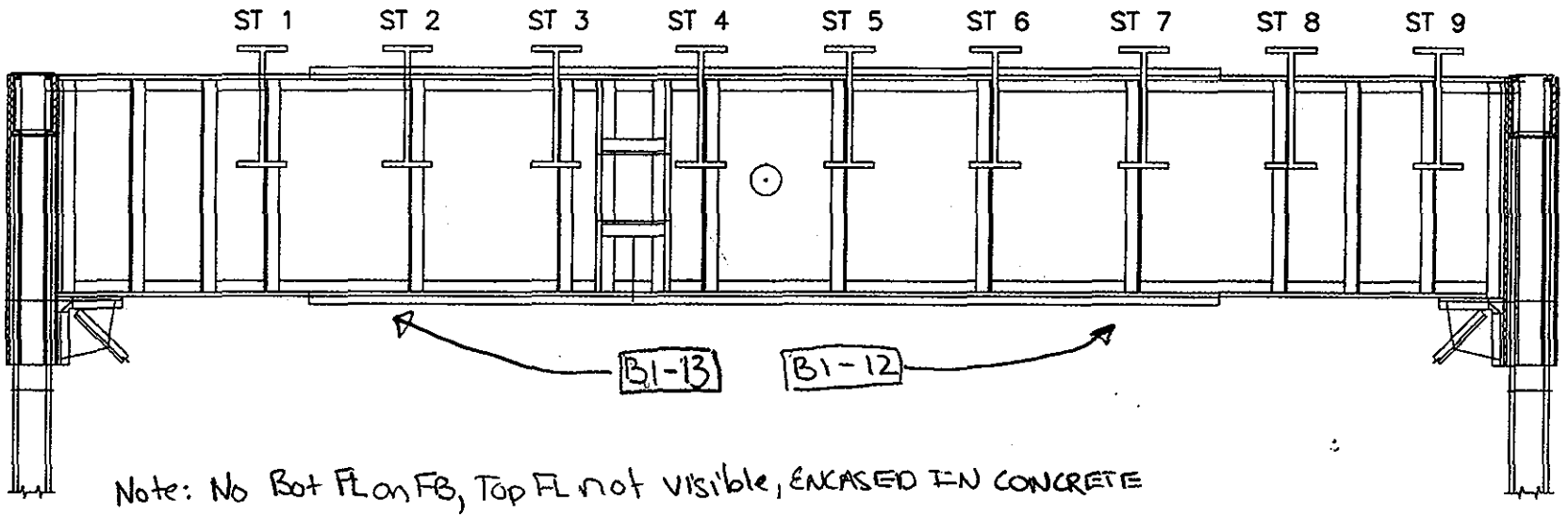

Note: No Bot FL on FB, Top FL not visible, ENCASED IN CONCRETE

121
227

SPAN 6
FLOORBEAM 8 S ELEV.

NOTES: ① SIM ⑥ N ELEV, SAME LOCATIONS (B1-12)
② SIM ⑦ N ELEV (B1-13)

FLOORBEAM ELEVATION

DEPARTMENT OF THE ARMY
NEW ENGLAND DISTRICT CORPS OF ENGINEERS

BOURNE HIGHWAY BRIDGE
ROUTINE INSPECTION

NOTES BY: LICHTENSTEIN
CONSULTING ENGINEERS

JOB #1986 | DATE: 7/7/98
CREW: MM, EL | SHEET 2 OF 6

NO STRGRS this VIEW

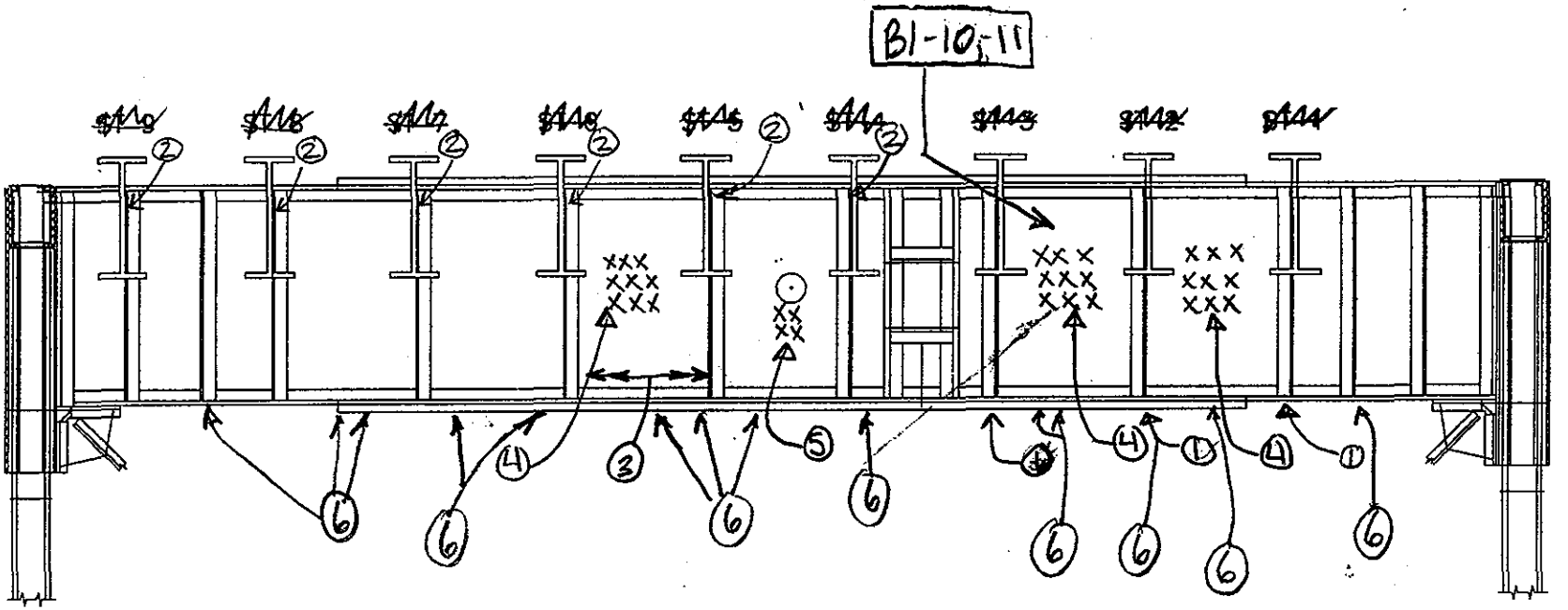

NOTE: No bot. FL CON. PL ON FB, TOP FL NOT VISIBLE, ENCASED IN CONCRETE

SPAN 6
FLOORBEAM 8 N ELEV.

NOTES:
1. Full Height plate, 5" by 1/2" welded to stiff OSL
2. 5" by 1/2" by varible height (6"-14") PL welded to top of stiff OSL
3. Remainder of PL Removed by FLAME CUTTING Full length of FB 1" above Bot FL & vertical leg (see PHOTO B1-10,11)
4. 1/8" deep by 16" heigh Pitting
5. 1/16" by 16" heigh Pitting
6. X WELDED TO BOT FL (B1-1,2, S EVEV)
7. localized areas of 1/8" by 2" ø Pitting on Top Bot FL Full length N&S

FLOORBEAM ELEVATION

DEPARTMENT OF THE ARMY
NEW ENGLAND DISTRICT CORPS OF ENGINEERS

BOURNE HIGHWAY BRIDGE
ROUTINE INSPECTION

NOTES BY: LICHTENSTEIN
CONSULTING ENGINEERS

JOB #1986 DATE: 7/7/98
CREW: MM, EL SHEET 1 OF 6

227

ADDITIONAL LOCATIONS
OF TYPICAL CONDITION(S)

	STR	FL	LOCATION (PP)
SPAN 2:	1	E	5'-9'
	2	W	5'-9'
	8	E	5'-9'
	9	W	6'-9'
SPAN 4	1	E	0-1
	2	W	0-8
	8	E	0-8
	9	W	3-4, 7-8
SPAN 6	1	E	6-8
	2	W	0-8
	8	E	0-8
	9	W	3-8

123
227

EL

FLOOR SYSTEM

DEPARTMENT OF THE ARMY
NEW ENGLAND DISTRICT CORPS OF ENGINEERS

BOURNE HIGHWAY BRIDGE
ROUTINE INSPECTION

NOTES BY: LICHTENSTEIN
CONSULTING ENGINEERS

JOB #1986 | DATE: 7-16-98
CREW: EL | SHEET 1 OF 2

III. BEARINGS

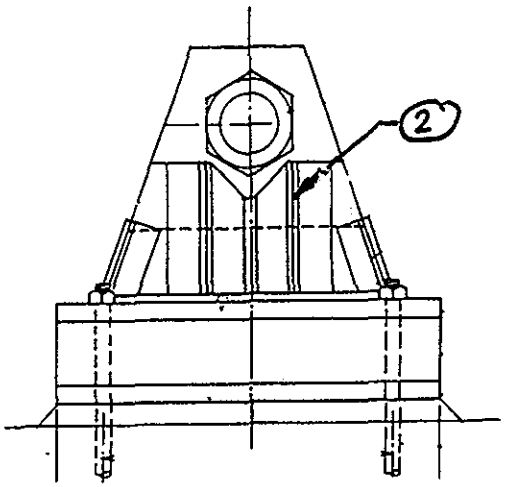

E. ELEV. B15-20

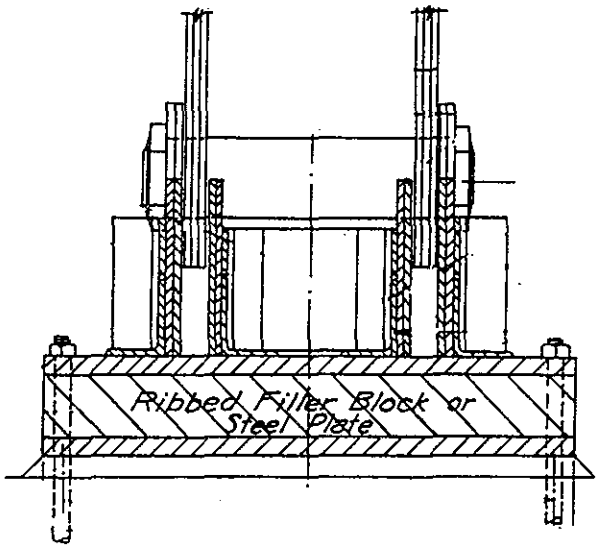

S. ELEV. B18-13

124
227

W BEARING

PIER S. Abut SPAN 7

NOTES:
1. Isolated Areas of med. Rust
2. 1/4" IR btwn. 4's
3. Foam Filled Cavity (W/ ABOUT HALF OF FOAM FILL DETERIORATED)*

*FP, EL 8/19/98

BEARINGS	
DEPARTMENT OF THE ARMY NEW ENGLAND DISTRICT CORPS OF ENGINEERS	
BOURNE HIGHWAY BRIDGE ROUTINE INSPECTION	
NOTES BY: LICHTENSTEIN CONSULTING ENGINEERS W²	
JOB #1986	DATE: 7/28/98
CREW: SD, W²	SHEET 25 OF 28

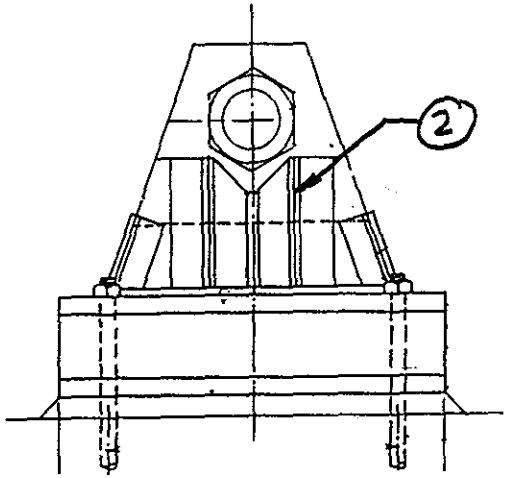

W ELEV. B15-19

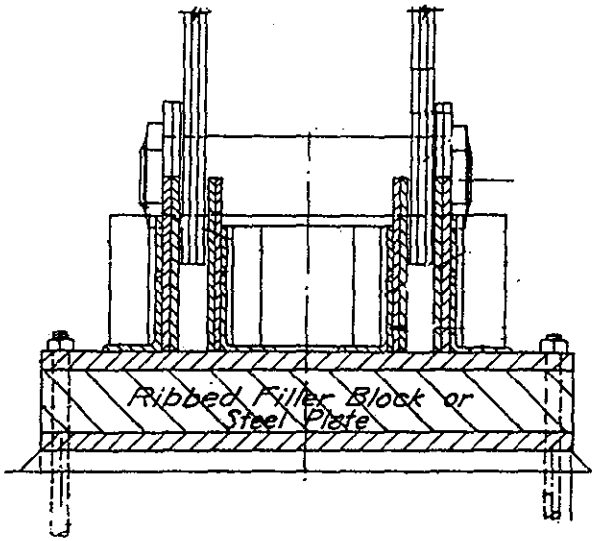

S ELEV. B18-14 *

E BEARING

PIER S. Abut. SPAN 7

NOTES:
1. Isolated Areas of med Rust
2. 1/4" IR btwn. ∡'s (typ.)
3. Foam Filled Cavity (WITH ≈ 3/4 OF FOAM FILL MISSING)*

* FP, EL 8/19/98

BEARINGS

DEPARTMENT OF THE ARMY
NEW ENGLAND DISTRICT CORPS OF ENGINEERS

BOURNE HIGHWAY BRIDGE
ROUTINE INSPECTION

NOTES BY: LICHTENSTEIN CONSULTING ENGINEERS

JOB #1986 | DATE: 7/28/98

CREW: SD, W² | SHEET 26 OF 28

227/125

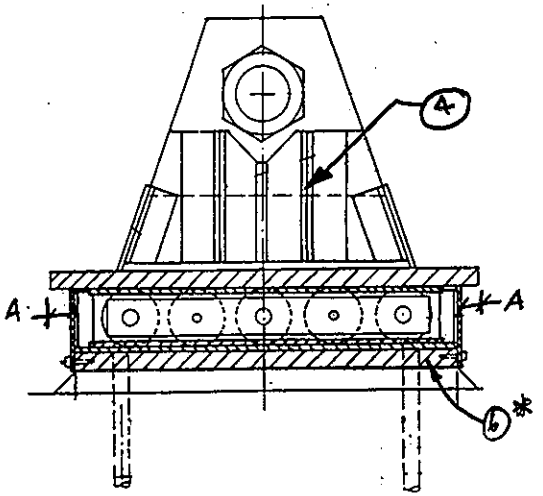

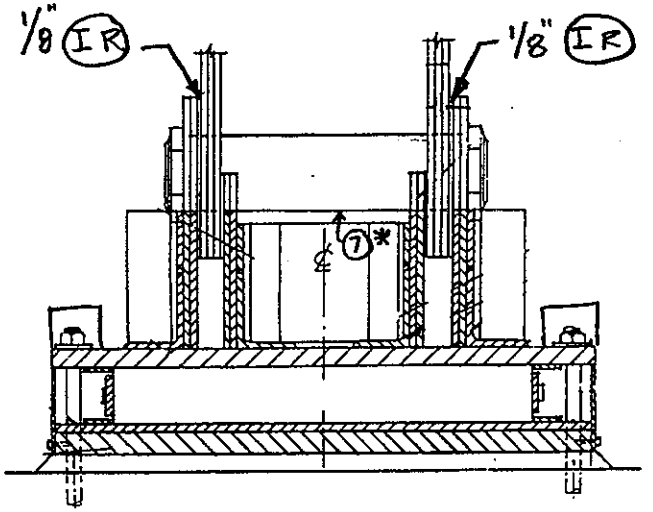

126/227

80° F E ELEV. B15-13 N ELEV.

Location	A
NE	9/16"
SE	1 3/8"
NW	3/8"
SW	1 1/4"

NOTE: PIN NUTS ARE SECURE & TIGHT *

W BEARING

PIER 5 SPAN 7

NOTES:
1. Typ. Isolated Areas of Hvy Rust on E. Elev.
2. Hvy. Grease build up at bot of N. Elev.
3. 2 grease bolts missing on e. face
4. 1/4" IR btwn. ℄ E. & W.
5. * MODERATE DEBRIS AT BASE OF FOAM FILL
6. * 3 OF 18 (EAST) & 1 OF 18 (WEST) MISSING BOLTS ON BEARING ROLLER COVER BOX
7. * LIGHT RUST ON BOT. OF PIN W/ UPTO 1/16" LOSS FULL LENGTH OF PIN, N&S.

*FP, EL 8/19/98

BEARINGS

DEPARTMENT OF THE ARMY
NEW ENGLAND DISTRICT CORPS OF ENGINEERS

BOURNE HIGHWAY BRIDGE
ROUTINE INSPECTION

NOTES BY: LICHTENSTEIN CONSULTING ENGINEERS

JOB #1986 DATE: 7/28/98

CREW: SD, W² SHEET 22 OF 28

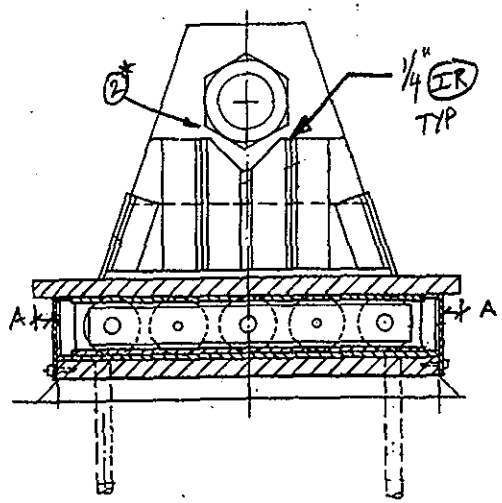

W ELEV.

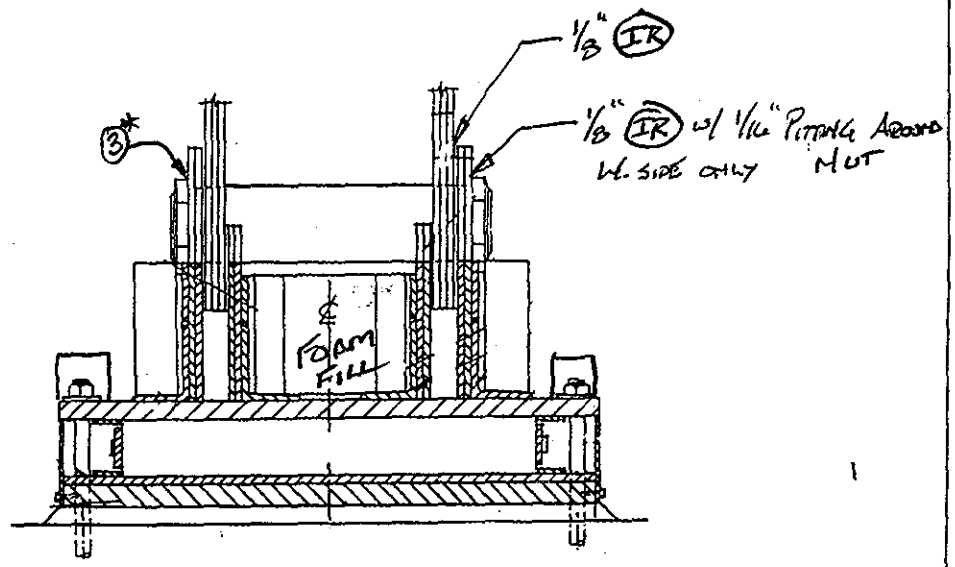

M ELEV.

80° F

LOCATION	A
NE	3/4"
NW	7/16"
SE	1"
SW	1 3/8"

E BEARING

B15-15

NOTE: PIN NUTS ARE SECURE & TIGHT*

PIER 5 SPAN 7

NOTES:

- 1 GREASE NUT MISSING on S. ELEV
- SIGN OF MOVEMENT
- HVY RUST ON M. ELEV.
- MOD GREASE BUILD UP

1* MODERATE DEBRIS INSIDE CAVITY @ BASE OF FOAM

2* 1/16" PITT. ON UNDER PIN, W. SIDE

3* 3/16" GAP BET. PIN NUT & PIN PL, E. ELEV.

4* 2 of 18 MISSING BOLTS ON BRG. ROLLER COVER BOX, E. & W. ELEV.

*CO EL 2/19/98

BEARINGS

DEPARTMENT OF THE ARMY
NEW ENGLAND DISTRICT CORPS OF ENGINEERS

BOURNE HIGHWAY BRIDGE
ROUTINE INSPECTION

NOTES BY: LICHTENSTEIN CONSULTING ENGINEERS

JOB #1986 DATE: 7/28/98

CREW: CD, W2 SHEET 21 OF 28

227

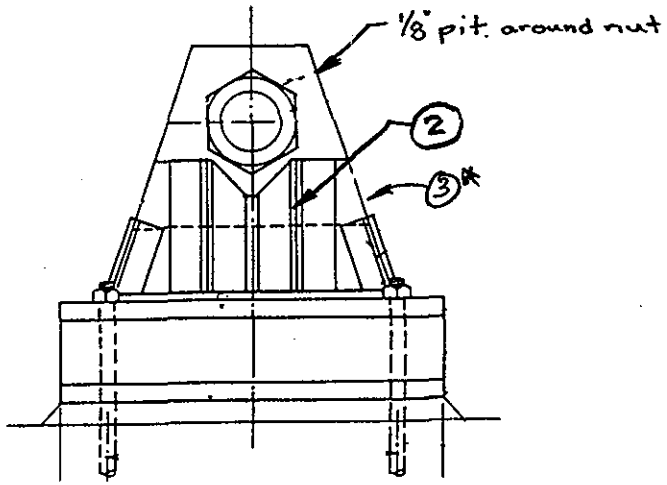

E ELEV. B15-12

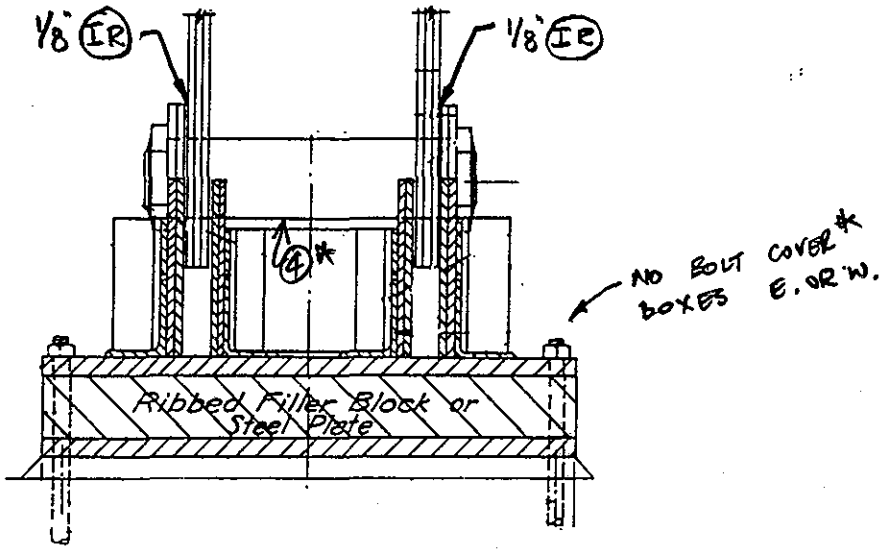

S ELEV.

NOTE: PIN NUTS ARE SECURE & TIGHT*

W BEARING

PIER 5 SPAN 5

NOTES:
1. Isolated Areas of Hvy. Rust on Base PL
2. 1/4" IR btwn 4 (Typ)
3. * N. SIDE OF PIN CAVITY MISSING FOAM FILL – MODERATE DEBRIS IN CAVITY.
4. * LT. TO MED. RUST ON BOT. OF PIN @ FOAM FILL INTERFACE w/ UPTO 1/16" LOSS ON PIN, N & S, FULL LENGTH OF PIN.

*FP, EL 8/19/98

BEARINGS	
DEPARTMENT OF THE ARMY NEW ENGLAND DISTRICT CORPS OF ENGINEERS	
BOURNE HIGHWAY BRIDGE ROUTINE INSPECTION	
NOTES BY: LICHTENSTEIN CONSULTING ENGINEERS	
JOB #1986	DATE: 7/28/98
CREW: SD, W²	SHEET 23 OF 28

227/128

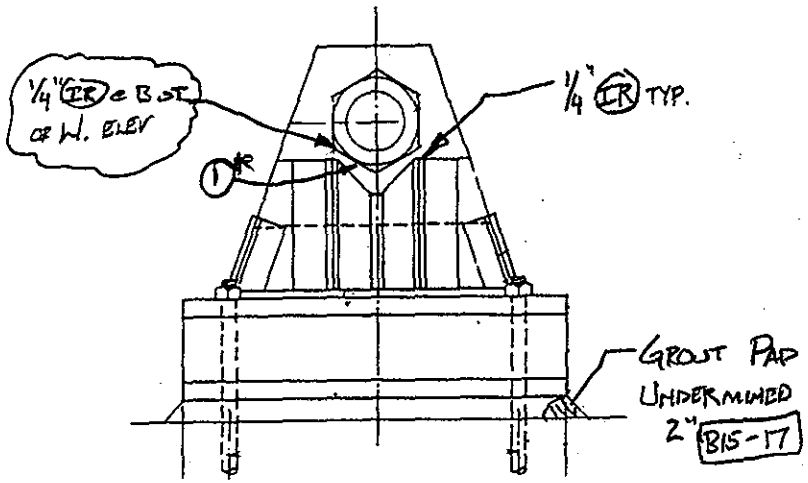

W ELEV.
FIXED

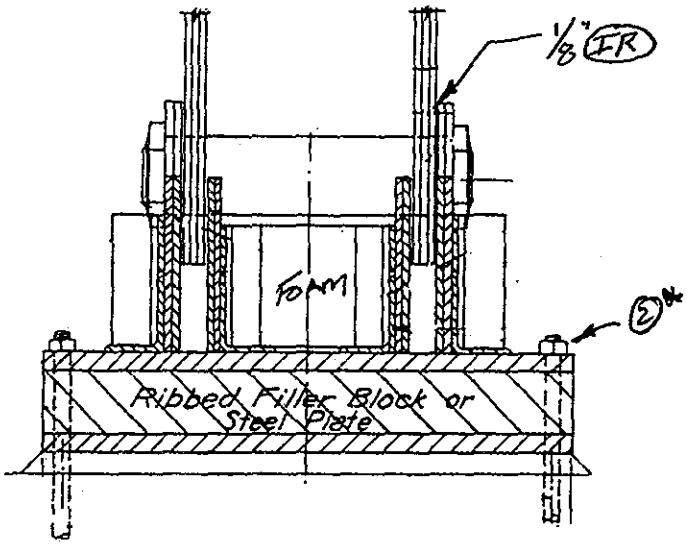

N ELEV.
FIXED

B15-14

NOTE: PIN NUTS ARE TIGHT & SECURE*

E BEARING

PIER 5 SPAN 5

NOTES:

TYP HVY RUST w/ ISOLATED 1/8" PITS ON W. ELEV ONLY

1* UP TO 1/8" PITT. UNDER PIN NUT ON EXT. PIN. @ W. ELEV.

2* N.W. ANCHOR BOLT HAS UP TO 25% LOSS ON NUT

*FF. EL 8/19/98

BEARINGS

DEPARTMENT OF THE ARMY
NEW ENGLAND DISTRICT CORPS OF ENGINEERS

BOURNE HIGHWAY BRIDGE
ROUTINE INSPECTION

NOTES BY: LICHTENSTEIN CONSULTING ENGINEERS

JOB #1986 DATE: 7/28/98

CREW: SD, W² SHEET 20 OF 28

129
2.27

Location	A
NE	1"
SE	5/8"
NW	15/16"
SW	15/16"

T= 82°F in Shade

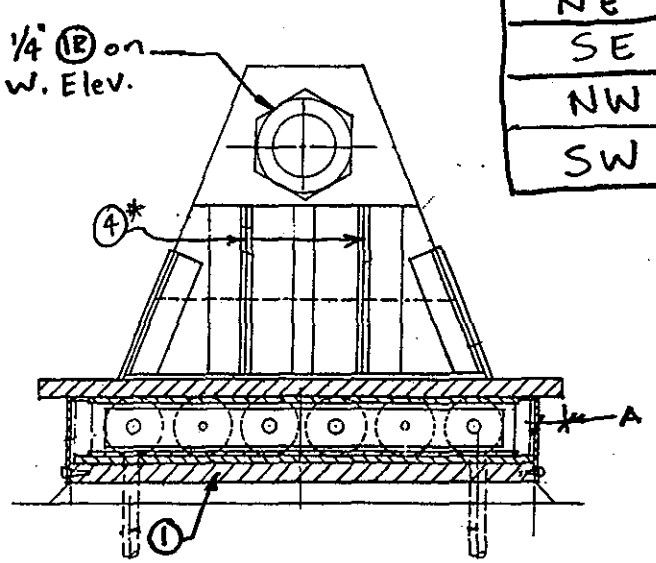

W ELEV.

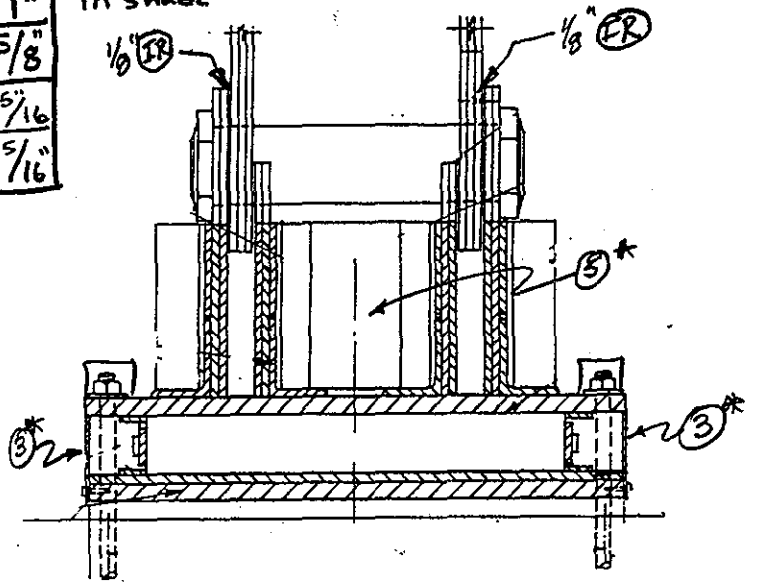

N ELEV.

NOTE: PIN NUTS ARE SECURE & TIGHT*

W BEARING

PIER 3 SPAN 5

NOTES:
(1) 7 Grease Bolts Loose on E. Face & 5 on W. Face
(2) Heavy grease leakage on Pier Cap
B12-25
TYP Signs of Movement
(3)* 3 of 19 (WEST FACE) & 1 of 19 (EAST FACE) MISSING BOLTS ON BRG. ROLLER COVER BOX.
(4)* UPTO 1/4" (IR) BETWEEN O.S.L. OF VERT. ∡S
(5)* N. SIDE PIN CAVITY MISSING FOAM FILL, MODERATE DEBRIS AT BASE OF CAVITY.
(6)* LT.-MED RUST ON BOT OF PIN @ FOAM FILL INTERFACE W/UPTO 1/16" LOSS.

*FY, EL 8/19/98

BEARINGS

DEPARTMENT OF THE ARMY
NEW ENGLAND DISTRICT CORPS OF ENGINEERS

BOURNE HIGHWAY BRIDGE
ROUTINE INSPECTION

NOTES BY: LICHTENSTEIN CONSULTING ENGINEERS

JOB #1986 DATE: 7/23/98
CREW: SD, W, PWN SHEET 5 OF 11

130
227

Location	A
NE	7/8"
NW	3/4"
SE	1/4"
SW	1/2"

T= 82°F in shade

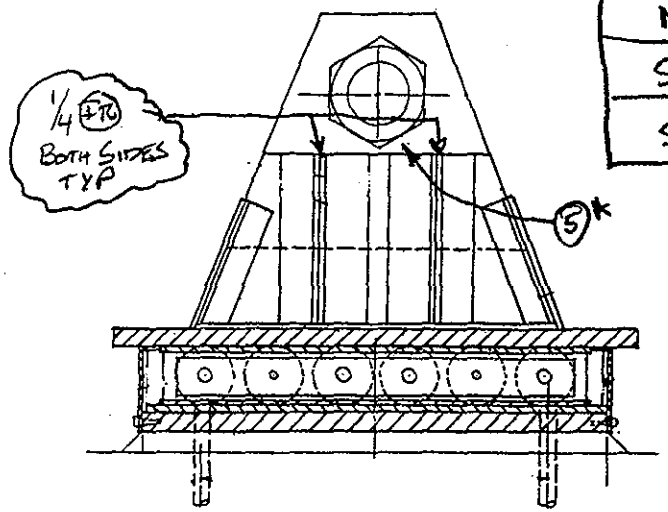

E ELEV.

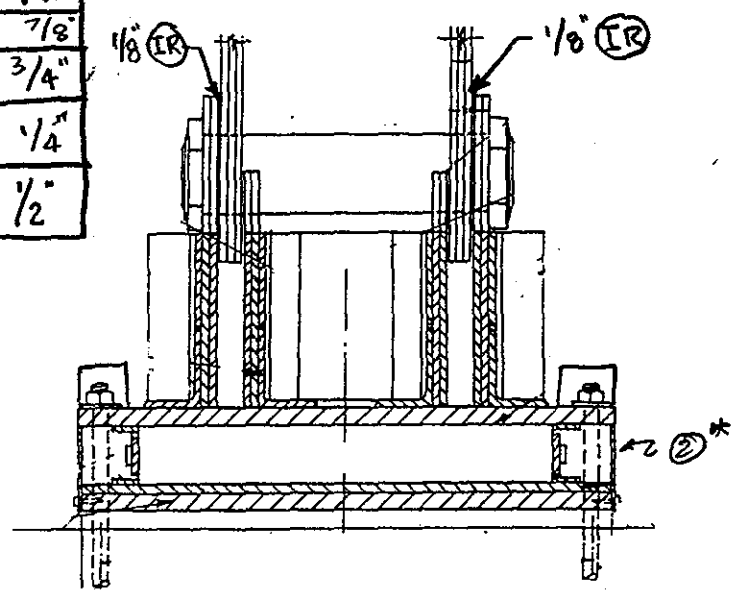

S ELEV.

E BEARING

PIER 3 SPAN 5

NOTE: PIN NUTS ARE TIGHT & SECURE*

NOTES: (1) Areas of H. Rust (Typ.)
(2) Signs of movement Noted
(3) Grease @ Base PL
B9-2
(4)* 2 OF 19 MISSING BOLTS, E. FACE OF ROLLER COVER BOX
(5)* UPTO 1/8" PITT. ON EXT. PIN PL UNDER PIN NUT, E. & W..

*FP, EL 8/19/98

BEARINGS

DEPARTMENT OF THE ARMY
NEW ENGLAND DISTRICT CORPS OF ENGINEERS

BOURNE HIGHWAY BRIDGE
ROUTINE INSPECTION

NOTES BY: LICHTENSTEIN CONSULTING ENGINEERS

JOB #1986 DATE: 7/23/98

CREW: LJ, SD, PWH SHEET 3 OF 11

131
227

Location	A
SW	7/8"
SE	15/16"
NW	15/16"
NE	15/16"

T= 82°F in shade

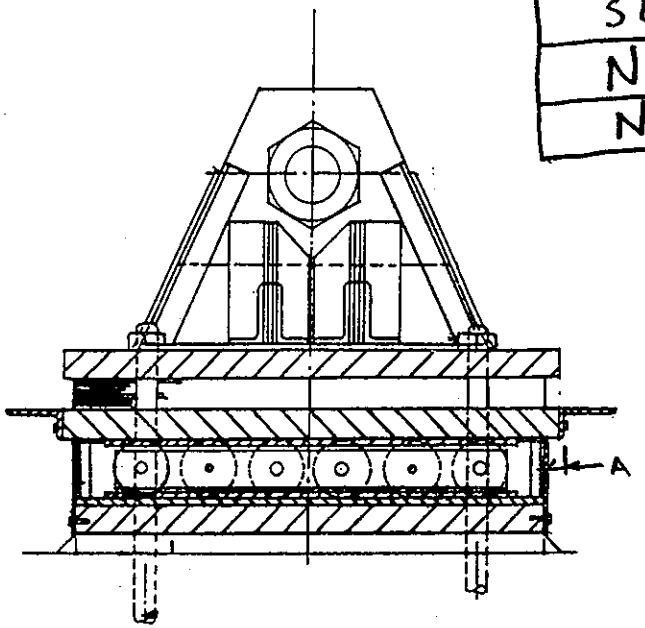

W ELEV.

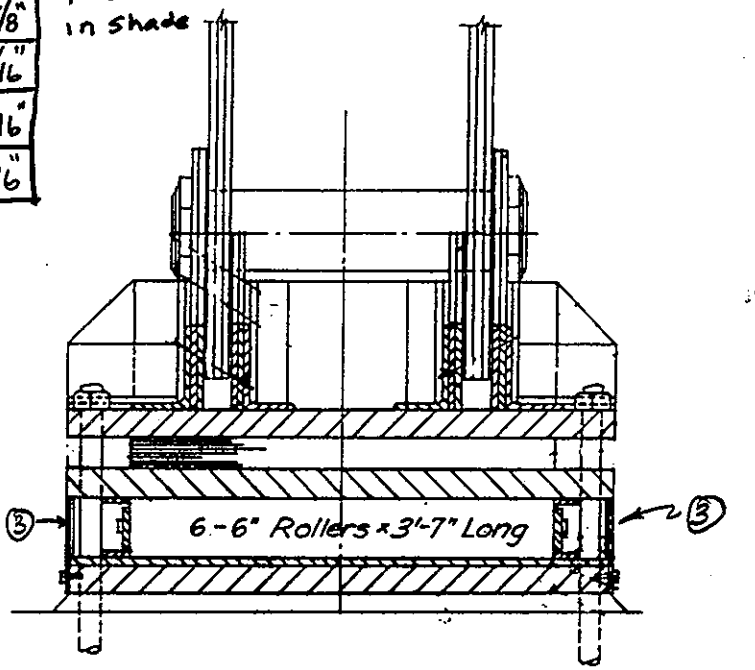

S ELEV.

NOTE: AN NUTS ARE TIGHT & SECURE *

W BEARING

PIER 3 SPAN 3

NOTES:
1. Heavy Grease @ Base Pl
2. Isolated areas of med Rust.
3. 1 Missing grease bolt on E. Elev., 2* on W. Elev.

B12-24

TYP SIGNS OF MOVEMENT

* FP, EL 8/19/98

BEARINGS

DEPARTMENT OF THE ARMY
NEW ENGLAND DISTRICT CORPS OF ENGINEERS

BOURNE HIGHWAY BRIDGE
ROUTINE INSPECTION

NOTES BY: LICHTENSTEIN CONSULTING ENGINEERS

JOB #1986 DATE: 7/23/98

CREW: WP, SD, PWM SHEET 6 OF 11

Location	A
NE	1 1/4"
NW	1 1/4"
SE	3/4"
SW	3/4"

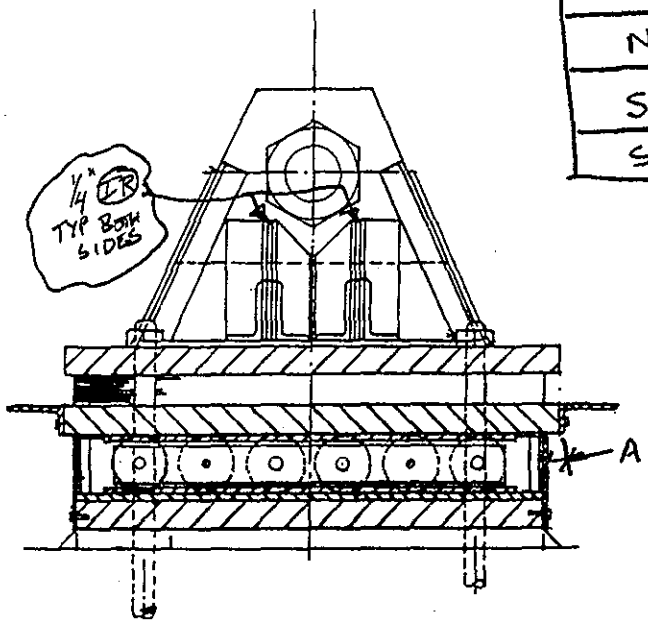

E ELEV.

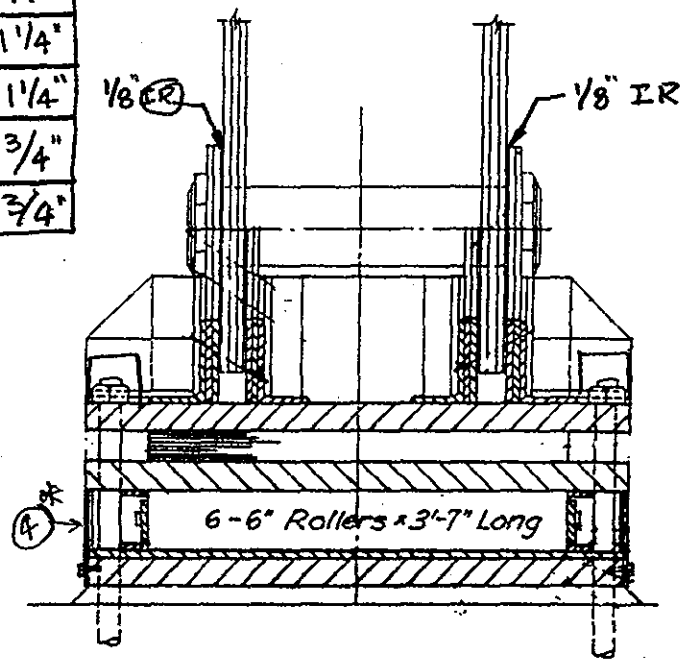

S ELEV.

133
227

E BEARING

PIER 3 SPAN 3

NOTE: PIN NUTS ARE TIGHT & SECURE*

NOTES:
1. Grease @ Base Pl.
2. Signs of movement
3. Areas of H. Rust (Typ.)

B9-3

4* ONE BOLT MISSING ON N. FACE OF POWER COVER BOX

* FP, EL 8/19/98

BEARINGS

DEPARTMENT OF THE ARMY
NEW ENGLAND DISTRICT CORPS OF ENGINEERS

BOURNE HIGHWAY BRIDGE
ROUTINE INSPECTION

NOTES BY: LICHTENSTEIN CONSULTING ENGINEERS

JOB #1986 DATE: 7/23/98

CREW: W, SD, PLM SHEET 4 OF 11

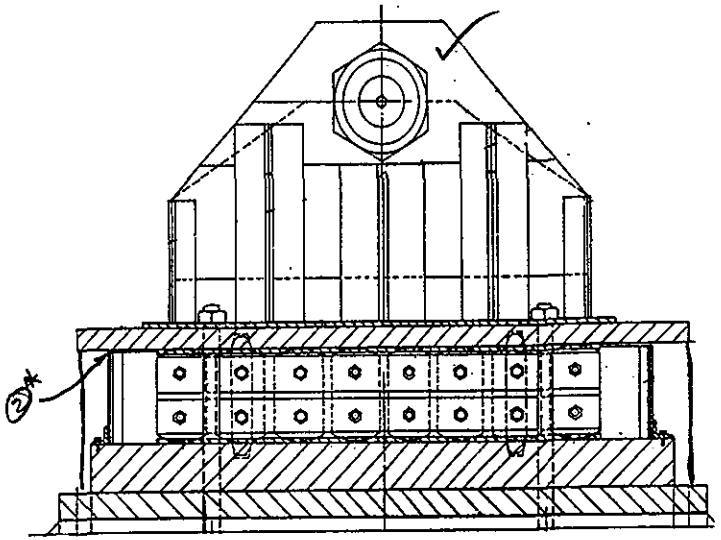

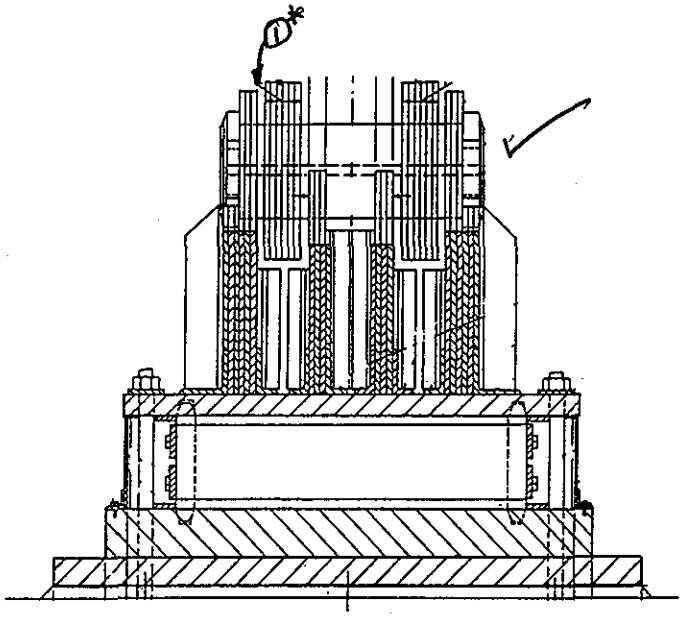

E ELEV.
FIXED

B12-20

S ELEV.
FIXED

NOTE: PIN NUTS & ANCHOR BOLT NUTS ARE TIGHT & SECURE *

W BEARING

PIER 1 SPAN 1/3

NOTES:

- PROTECTIVE 1/8" SHEET METAL MISSING ON SOUTH SIDE, 1/2 MISSING ON EAST SIDE, LOOSE ON WEST SIDE,
- BRG FILLED WITH FOAM
- ISOLATED HVY RUST ON RIVETS & NUTS

① * EAST SIDE MISSING FOAM: FILL BETWEEN PLATES.

② * (IR) BETWEEN BRG. PL & TOP OF BRG. ON S.E. CORNER

* FI, EL 8/19/98

BEARINGS

DEPARTMENT OF THE ARMY
NEW ENGLAND DISTRICT CORPS OF ENGINEERS

BOURNE HIGHWAY BRIDGE
ROUTINE INSPECTION

NOTES BY: LICHTENSTEIN CONSULTING ENGINEERS

JOB #1986 | DATE: 7/23/98

CREW: H², SD, PMH | SHEET 1 OF 11

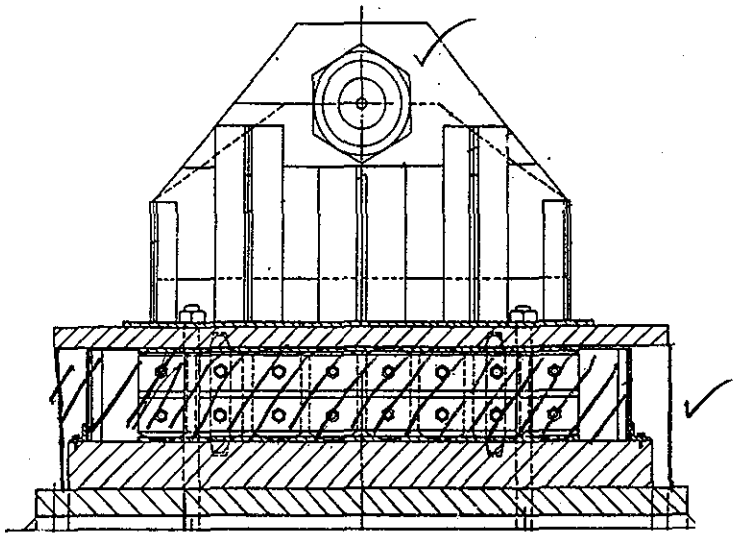

W ELEV.
FIXED BRG

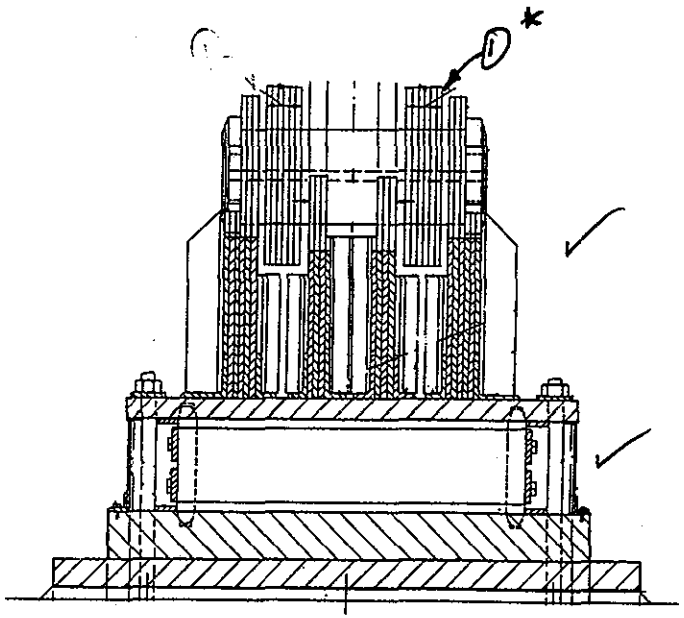

N ELEV.
FIXED BRG

B12-21

E BEARING

PIER 1 SPAN 1/3

NOTE: PIN NUTS ARE SECURE & TIGHT *

NOTES:

- PROTECTIVE 1/8" SHEET METAL SKIRT, MISSING ON EAST, NORTH, ALL BUT 2' ON W. 6' ON S. SIDE
- FOAM FILLED BRG
- ISOLATED HVY RUST ON RIVET & NUTS

1* FOAM PARTIALLY MISSING BET. PTS ON W. SIDE.

* FP, EL 8/19/98

BEARINGS

DEPARTMENT OF THE ARMY
NEW ENGLAND DISTRICT CORPS OF ENGINEERS

BOURNE HIGHWAY BRIDGE
ROUTINE INSPECTION

NOTES BY: LICHTENSTEIN CONSULTING ENGINEERS

JOB #1986 DATE: 7/23/98

CREW: WJ, SD, PMM SHEET 2 OF 11

227 135

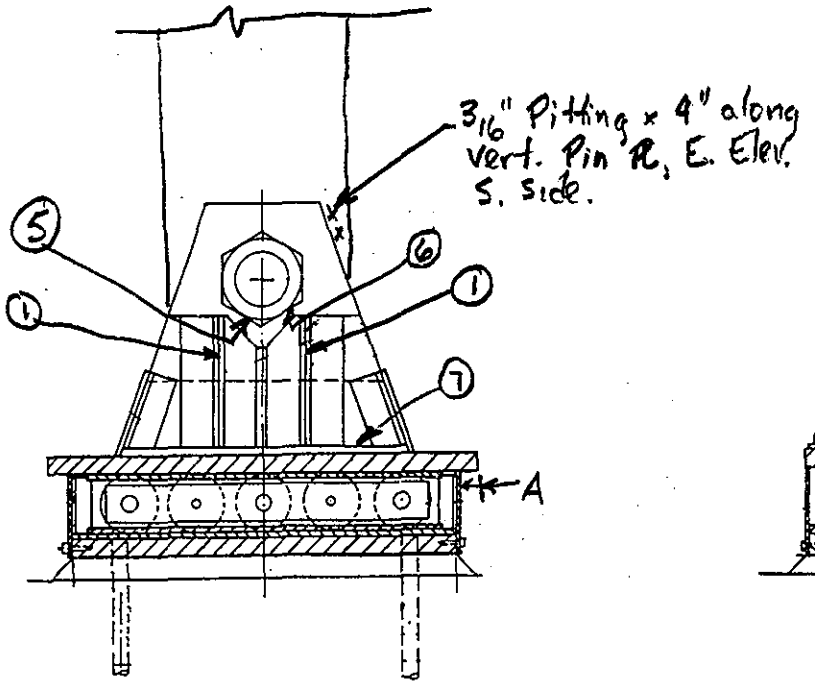

W ELEV.

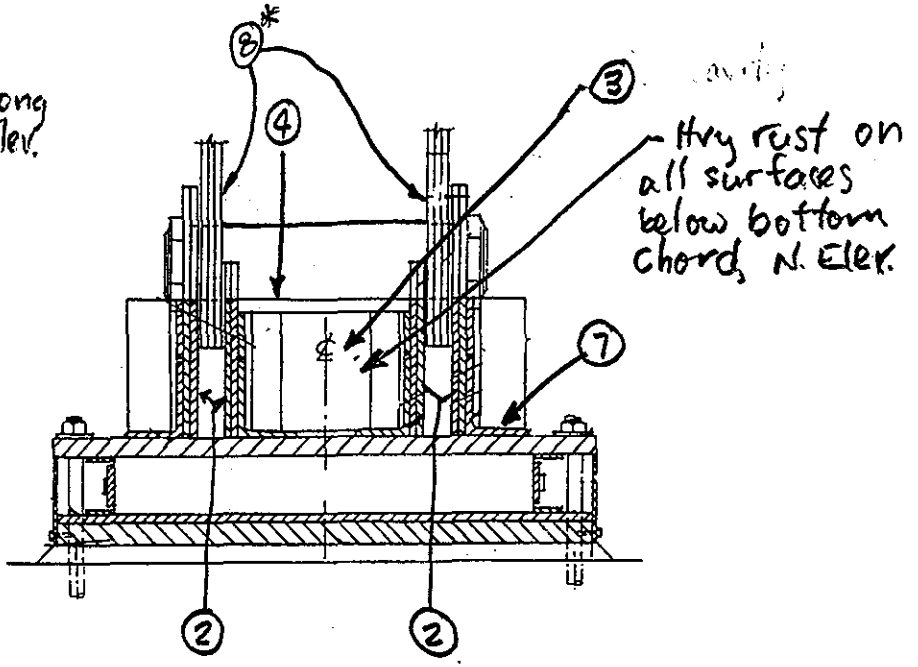

S ELEV.

(144/227) T = 87°F in the sun

LOC.	A
NE	-2"
NW	-2"
SE	5/8"
SW	5/8"

- Signs of movement noted under vond & live load
- Anchor Bolt Covers in satisfactory condition.

* Pin nuts are secure & tight.

W BEARING

PIER 6 SPAN 6

NOTES: (1) (12) btwn ℄'s OSL full ht.: 1/4" = t, W ; 5/16" = t, E

(2) 1/16" Pitting x 6" ↕ on vertical Pin PL's along Vert. Guss. PL, S. Elev.

(3) Pin cavity partially filled w/ styrofoam, up to 1/8 Pitting on vertical Pin PL's @ top of styrofoam, w/ 30% loss on rivet hds - S. Elev.

(4) 1/16 full length of pin along top of styrofoam, N & S

(5) 1/8" loss along 2 faces of Pin nut, E. Elev.

(6) 1/16" (12) btwn Pin nut & Vert. Pin PL 4:00 - 8:00, E. Elev., *UPTO 1/4" GAP BET. NUT & PL (W. ELEV)

(7) Up to 50% loss on all 9 rivet hds, E. Elev.

(8)* UP TO 1/4" x 2" PITTING ABOVE PIN, ON PIN PL.

*FP, EL 8/19/98

BEARINGS

DEPARTMENT OF THE ARMY
NEW ENGLAND DISTRICT CORPS OF ENGINEERS

BOURNE HIGHWAY BRIDGE
ROUTINE INSPECTION

NOTES BY: LICHTENSTEIN
CONSULTING ENGINEERS

JOB #1986 | DATE: 7·14·98

CREW: SD, EL | SHEET 19 OF 10

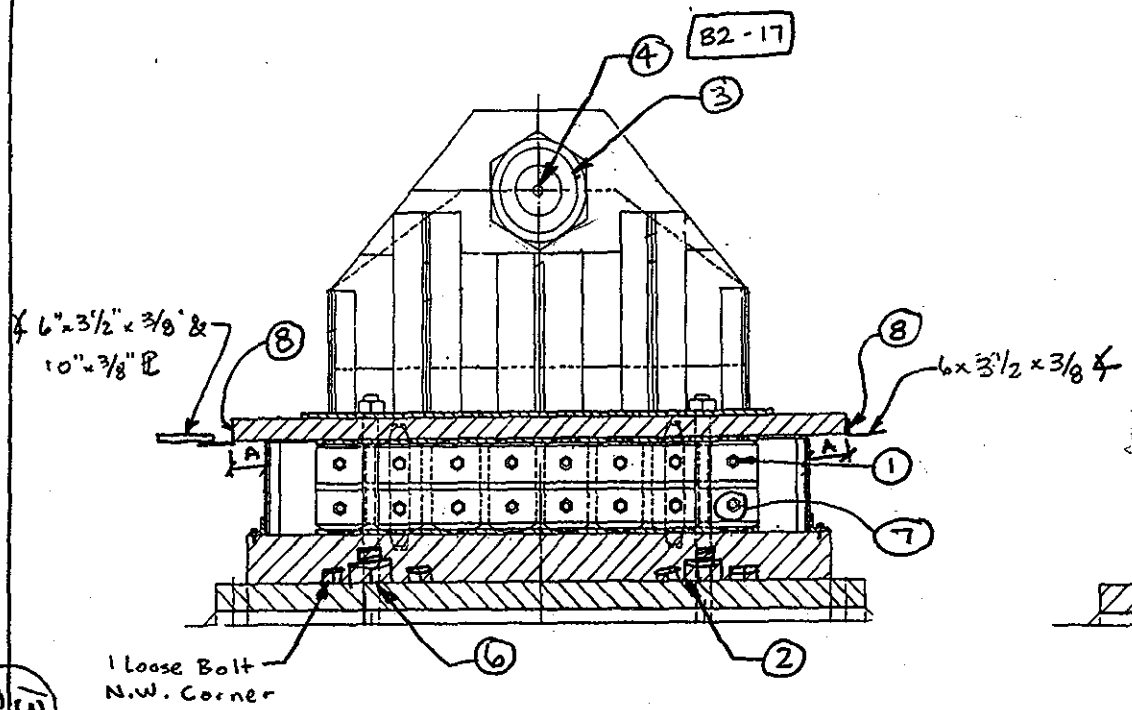

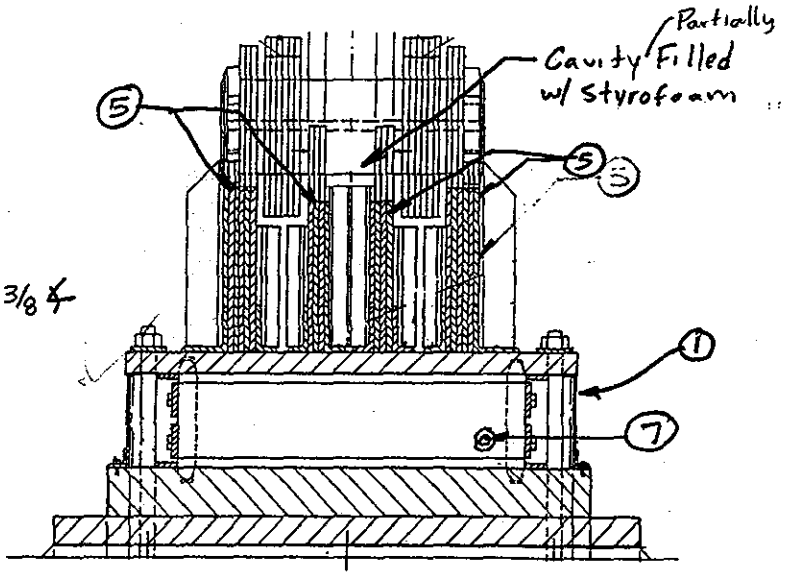

T = 80° F in Sun

Location	"A"
NE	-3¾"
SE	3/16"
NW	-3⅞"
SW	¼"

W. ELEV.

S. ELEV.

*NOTE: PIN NUTS ARE SECURE & TIGHT

E. BEARING

PIER 2 SPAN 1/2

NOTES:
1. 17 Empty holes on W. Face & E. Face *FP, EL 8/19/98
2. Anchor & 2 Second. Anch. Bolts Loose @ SW Corner.
3. 3/8" IR Btwn 9 & 3 o'clock (W. Elev.)
4. 3/16" Loss on 2 Faces & 1/16" Loss on 1 Face of Pin PL Nut (W. Elev.)
5. Similiar Condition as note 7 on W. Brg.
6. All 4 Secondary Anch. Bolts Loose & N. Anch. Bolt Loose (Turn by hand) (E. Elev.)
7. 2 Missing bolts E. Face & N. Face.
8. 5 Missing bolts Conn. ∠ to Exp. PL (N. Elev) [1 on S. Elev.]
9. Signs of Movement Noted Under Wind & Live Load

BEARINGS

DEPARTMENT OF THE ARMY
NEW ENGLAND DISTRICT CORPS OF ENGINEERS

BOURNE HIGHWAY BRIDGE
ROUTINE INSPECTION

NOTES BY: LICHTENSTEIN
CONSULTING ENGINEERS

JOB #1986 DATE: 7/13/98

CREW: CD, EL SHEET 2 OF 8

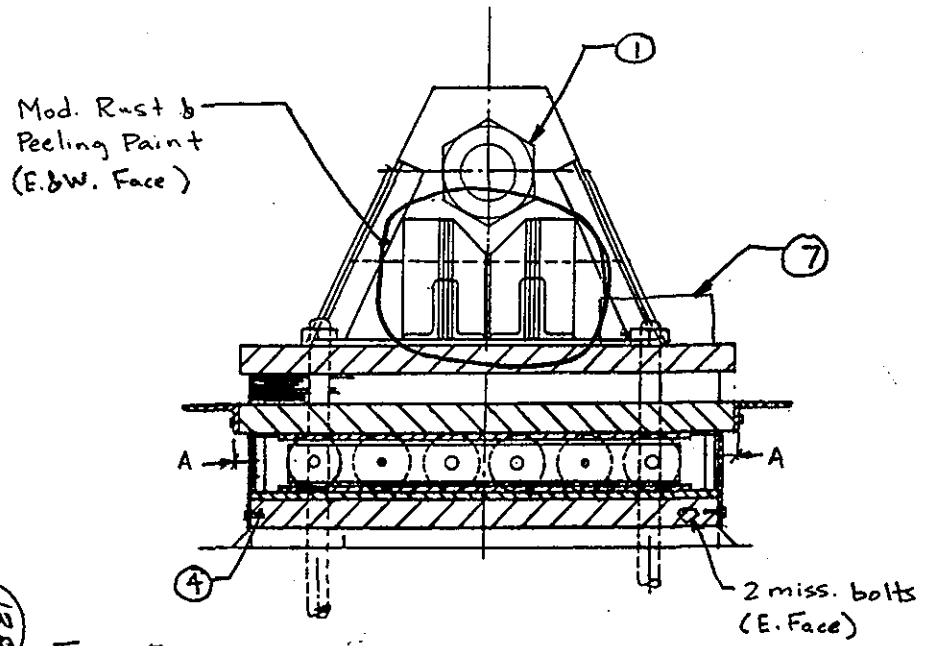

E1 ELEV.

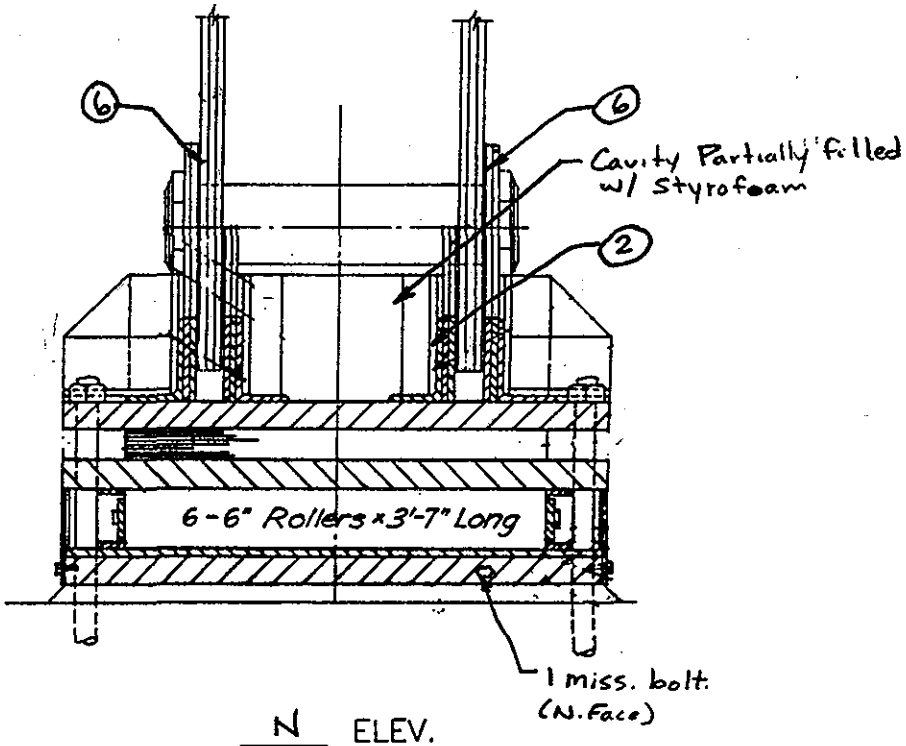

N ELEV.

138
227

T= 72°F in Shade

Location	A
NE	1"
NW	1 3/16"
SE	-1 1/8"
SW	-1 1/4"

NOTE: PIN NUTS ARE SECURE & TIGHT*

W BEARING

PIER 4 SPAN 2

EL

NOTES:
1. Heavy Rust with 1/16" Loss on one face Pin Nut (E. Elev.)
2. H. Rust w/ 1/16" Loss on Vertical PL @ Top, of Styrofoam (N. & S.).
3. Signs of Movement Noted Under wind & Live Load
4. Water Running out of drain holes on W. Face B2-20
5. Similar Condition as note 5 Span 2, E. Brg, Pier 4.
6. 1/8" IR btwn. Vert. Gusset PL & Ext. Pin PL
7. N.E Anchor Bolt Cover Box has Heavy Rust w/ 4"ø Hole on W. Face
8. Signs of Movement Noted Under Live & Wind Loads

*FP, EL 8/19/98

BEARINGS

DEPARTMENT OF THE ARMY
NEW ENGLAND DISTRICT CORPS OF ENGINEERS

BOURNE HIGHWAY BRIDGE
ROUTINE INSPECTION

NOTES BY: LICHTENSTEIN
CONSULTING ENGINEERS

JOB #1986 | DATE: 7/13/98
CREW: SD, EL | SHEET 3 OF 8

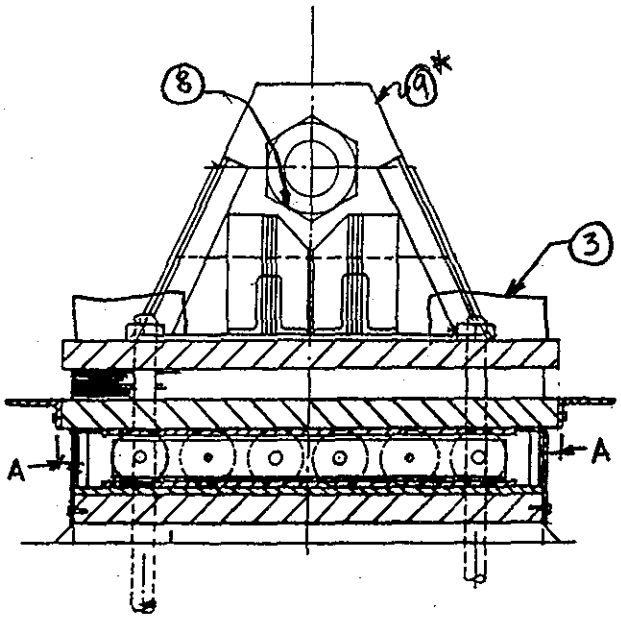

W ELEV.

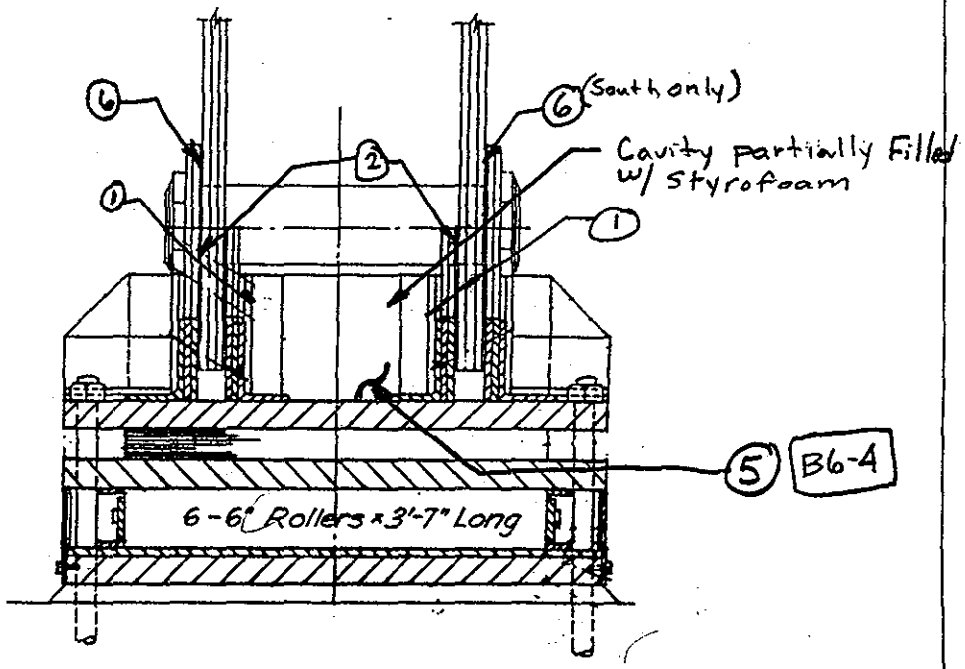

N ELEV.

T=74°F in shade

Location	A
NE	1 5/8"
NW	1 1/2"
SE	-2"
SW	-2"

NOTE*: PIN NUTS ARE SECURE & TIGHT

E BEARING

PIER 4 SPAN 2

EL

NOTES:
1. Similar Cond. As note 2 Span 2, W. Brg., Pier 4
2. 1/4" - 3/8" IR btwn Truss Vert. Gusset PL & Pin Support PL
3. 5"W x 3" High hole & 2"ø in E. Face of S.W. Anchor Bolt Cover Box
4. Similar to Note 2 S.E. (1/8" IR)
5. H. Rust w/ upto 1/16" Loss on all surfaces below Truss PL's (S. Elev)
6. 1/8" IR btwn. Vert. Gusset PL & Ext. Pin PL (Vert. Surfaces)
7. Signs of movement Noted Under Live & Wind Loads
8. 2 Faces of Pin Nut w/ H. Rust & 1/16" Loss (W. Elev.)
9. * UPTO 5/16" (IR) BET. PIN PL & GUSSET PL

*FP. EL 8/19/98

BEARINGS

DEPARTMENT OF THE ARMY
NEW ENGLAND DISTRICT CORPS OF ENGINEERS

BOURNE HIGHWAY BRIDGE
ROUTINE INSPECTION

NOTES BY: LICHTENSTEIN
CONSULTING ENGINEERS

JOB #1986 DATE: 7/13/98
CREW: SD, EL SHEET 4 OF 8

139
227

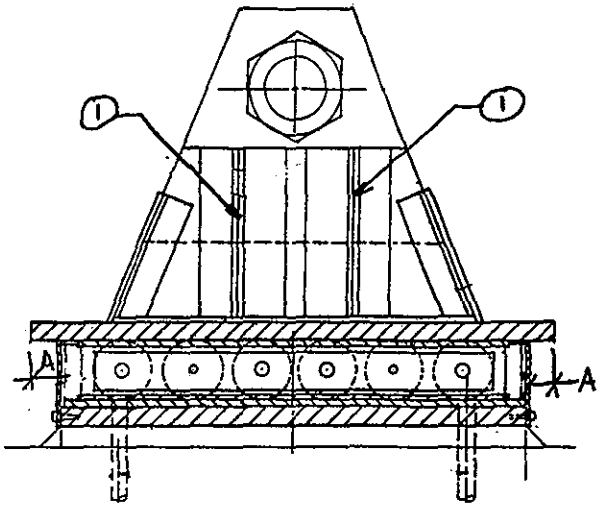

E ELEV.

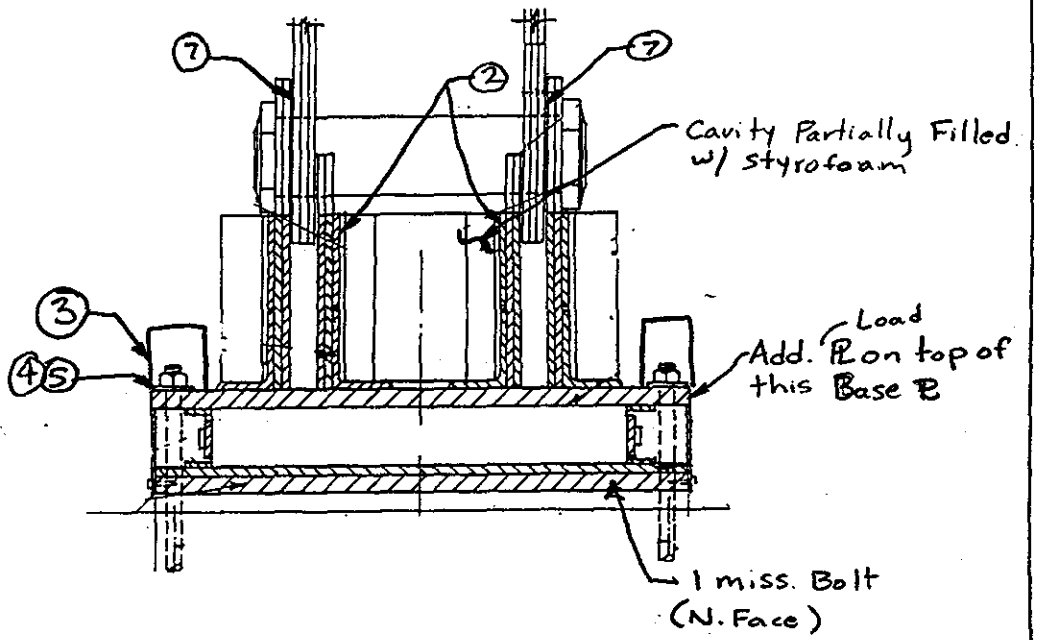

S ELEV.

(1/40 227)

T=74°F in Shade

Location	A
NE	5/8"
NW	+1/2"
SE	-5/8"
SW	-1/2"

W BEARING

PIER 4 SPAN 4

EL

NOTES:
1. Up to 1/2" IR btwn ∡ Full Height (E. Elev.) [3/8"- W Elev.]
2. Similar Condition as note 2 Span 2, Pier 4, W. Brg.
3. W. Face of W. Box Covering Anchor Bolts is Rusted thru For 2' (E. Face to)
4. 1/4" IR btwn. Load & Base PL Full Width W. Elev.
5. H. Rust on Load PL w/ 1 1/4" Remaining For 2'
6. Similar Condition as Note 5 Span 2, E. brg., Pier 4
7. 1/8" IR Btwn Vert. Gusset PL & Ext. Pin PL. along vert.
8. Signs of Movement Noted Under Live & Wind Loads

BEARINGS	
DEPARTMENT OF THE ARMY NEW ENGLAND DISTRICT CORPS OF ENGINEERS	
BOURNE HIGHWAY BRIDGE ROUTINE INSPECTION	
NOTES BY: LICHTENSTEIN CONSULTING ENGINEERS	
JOB #1986	DATE: 7/13/98
CREW: SD, EL	SHEET 5 OF 8

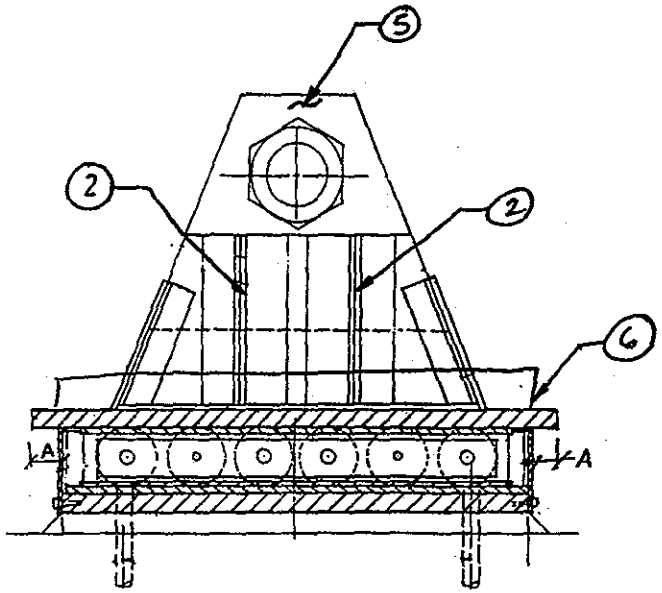

W ELEV.

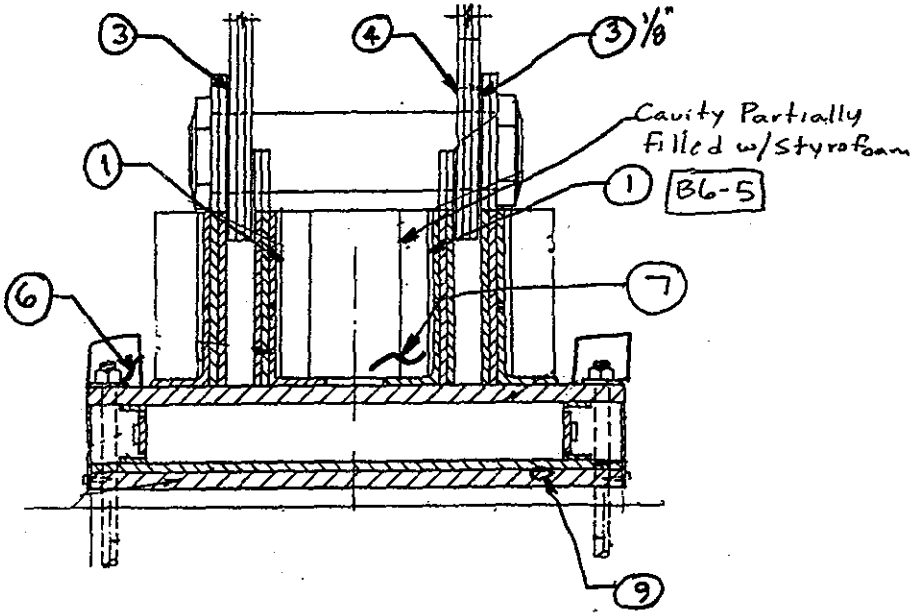

S ELEV.

Location	A
NE	5/8"
N.W.	3/4"
SE	-7/16"
SW	-5/8"

(8) Signs of movement noted under wind & Live Load

(9) 1 missing bolt on roller cover PL (N. Face & W. Face)

E. BEARING

PIER 4 SPAN 4

EL

NOTES: (1) Upto 1/16" Loss of Int. Pin PL around Styrofoam filling

(2) Upto 3/8" IR Btwn ∡'s (E. & W. Face)

(3) Upto 1/4" IR btwn. Vert. Gusset & Ext. Pin PL (Vert. Surf.) W. Elev.

(4) 1/16"-1/8" Deep x 2" Avg height Pitting on W. Face of Gusset PL around Pin from 12 o'clock - 3 o'clock B6-6

(5) 3/16" Dp x 1" H x 5" Lg. Pitting on Ext. Pin PL above Pin (E. Elev)

(6) W. Anchor Bolt Cover box has 2" H x 4" Lg. hole in S. Corner & Also 1" H x 8" Lg. & 1" H x 3" Lg. hole in E. Face B6-7

(7) H. Rust w/upto 1/16" Loss below Bot. Chord on all surfaces (N. Elev)

BEARINGS

DEPARTMENT OF THE ARMY
NEW ENGLAND DISTRICT CORPS OF ENGINEERS

BOURNE HIGHWAY BRIDGE
ROUTINE INSPECTION

NOTES BY: LICHTENSTEIN
CONSULTING ENGINEERS

JOB #1986 DATE: 7/13/98

CREW: SD, EL SHEET 6 OF 8

(141/227)

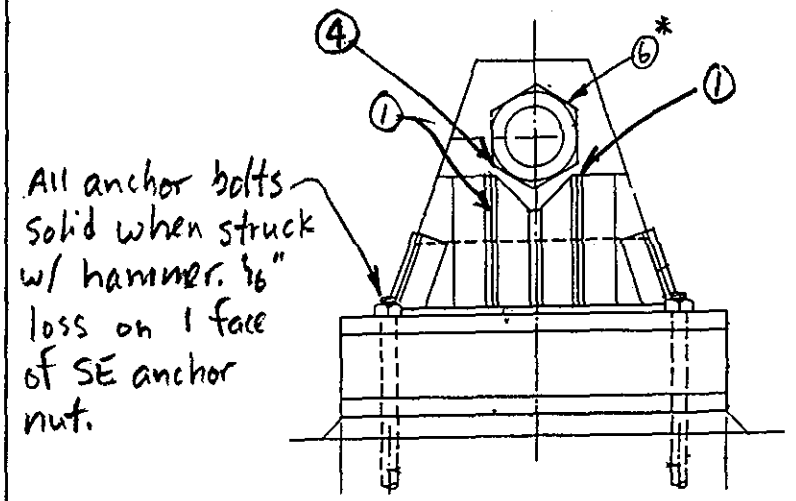

W ELEV.

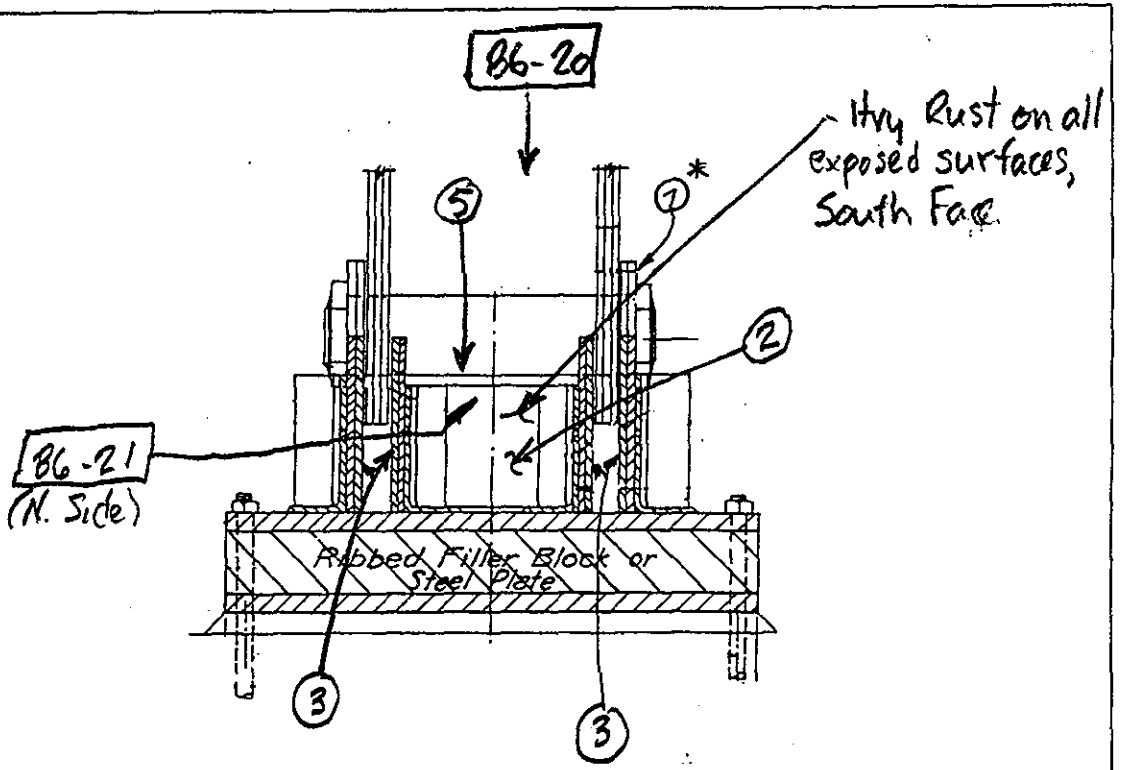

S ELEV.

W BEARING

PIER 6 SPAN 4

EL

NOTES: (1) IR btwn ∡ OSL up to 5/16" thick × full ht. W & E faces

(2) Pin cavity partially filled w/ styrofoam, 1/16" pitting along vertical PL's @ top of styrofoam N & S also 20% loss on rivet hds on this line N., 50% S.

(3) 1/16" pitting × 7" ↕ on vertical Pin PL's along vertical gusset PL

(4) 1/8" loss along 1 face of E. Pin nut. (IR) btwn E. Pin nut & PL 4:00-8:00, t=1/8"

(5) 1/16" pitting full length of pin @ top of styrofoam N & S

(6)* UPTO 1/4" GAP BET. PIN NUT & PIN PL (W. NUT), @ BOT. OF NUT

(7)* UPTO 1/8" × 4" W. PITT. ON PIN PL - TOP OF PIN NUT

* FP, EL 8/19/98

BEARINGS	
DEPARTMENT OF THE ARMY NEW ENGLAND DISTRICT CORPS OF ENGINEERS	
BOURNE HIGHWAY BRIDGE ROUTINE INSPECTION	
NOTES BY: LICHTENSTEIN CONSULTING ENGINEERS	
JOB #1986	DATE: 7·14·98
CREW: SD EL	SHEET 10 OF 10

142
227

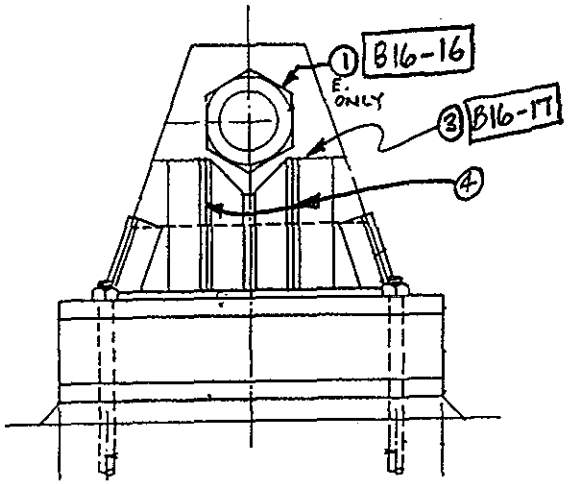

W. ELEV.

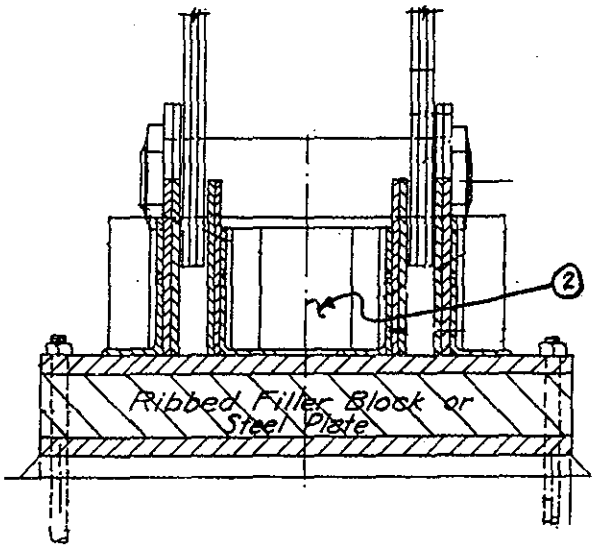

N ELEV.

143/227

E BEARING

PIER 6 SPAN 4

NOTES:
1. 7/16" GAP BETWEEN PIN NUT & PIN ⅊ ON E. SIDE
2. FOAM IN CAVITY HAS DETERIORATED & CAVITY IS FILLED WITH DEBRIS
3. RUST STAINING ON W. SIDE
4. UPTO 3/4" (IR) BETWEEN O.S.L. OF VERT. & S

BEARINGS	
DEPARTMENT OF THE ARMY NEW ENGLAND DISTRICT CORPS OF ENGINEERS	
BOURNE HIGHWAY BRIDGE ROUTINE INSPECTION	
NOTES BY: LICHTENSTEIN CONSULTING ENGINEERS	
JOB #1986	DATE: 7/28/98
CREW: FP, PWN	SHEET 2 OF 24

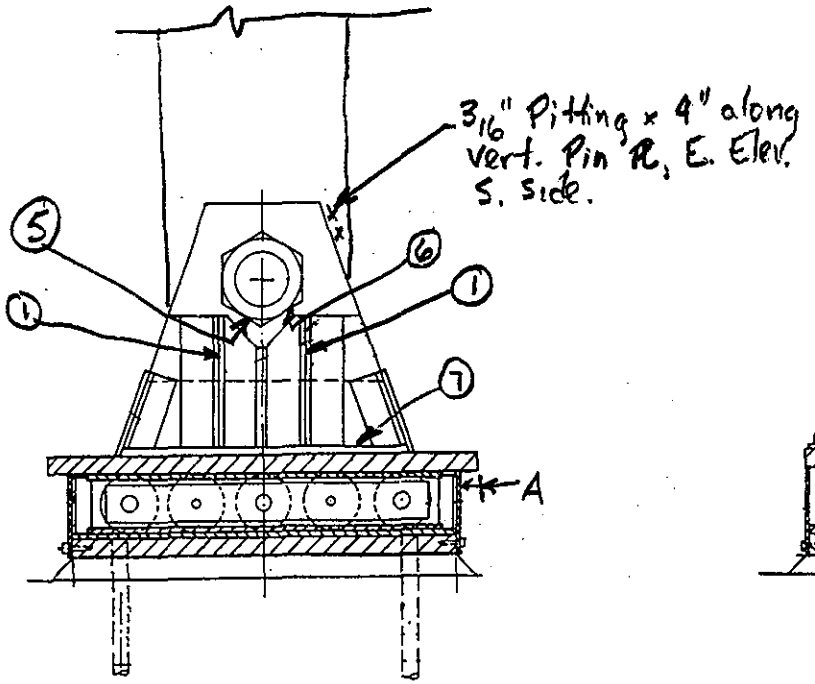

W ELEV.

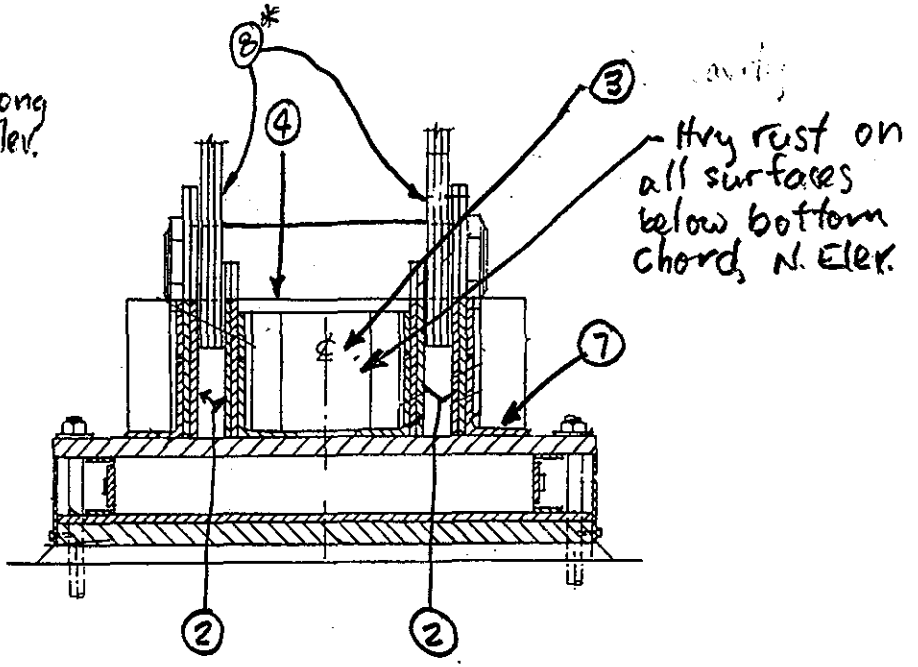

S ELEV.

(144/227) T = 87°F in the sun

LOC.	A
NE	-2"
NW	-2"
SE	5/8"
SW	5/8"

- Signs of movement noted under vond & live load
- Anchor Bolt Covers in satisfactory condition.

* Pin nuts are secure & tight.

W BEARING

PIER 6 SPAN 6

NOTES: (1) (12) btwn ℄'s OSL full ht.: 1/4" = t, W ; 5/16" = t, E

(2) 1/16" Pitting x 6" ↕ on vertical Pin PL's along Vert. Guss. PL, S. Elev.

(3) Pin cavity partially filled w/ styrofoam, up to 1/8 Pitting on vertical Pin PL's @ top of styrofoam, w/ 30% loss on rivet hds - S. Elev.

(4) 1/16 full length of pin along top of styrofoam, N & S

(5) 1/8" loss along 2 faces of Pin nut, E. Elev.

(6) 1/16" (12) btwn Pin nut & Vert. Pin PL 4:00 - 8:00, E. Elev., *UPTO 1/4" GAP BET. NUT & PL (W. ELEV)

(7) Up to 50% loss on all 9 rivet hds, E. Elev.

(8)* UP TO 1/4" x 2" PITTING ABOVE PIN, ON PIN PL.

*FP, EL 8/19/98

BEARINGS

DEPARTMENT OF THE ARMY
NEW ENGLAND DISTRICT CORPS OF ENGINEERS

BOURNE HIGHWAY BRIDGE
ROUTINE INSPECTION

NOTES BY: LICHTENSTEIN
CONSULTING ENGINEERS

JOB #1986 | DATE: 7·14·98

CREW: SD, EL | SHEET 19 OF 10

TEMP - 75°F (SHADE)

LOCATION (CORNER)	DIMENSION A
NE	− 2 3/8
NW	− 2 1/8"
SE	+ 3/4"
SW	+ 9/16"

+ → TOP ⌀ OVERHANGS

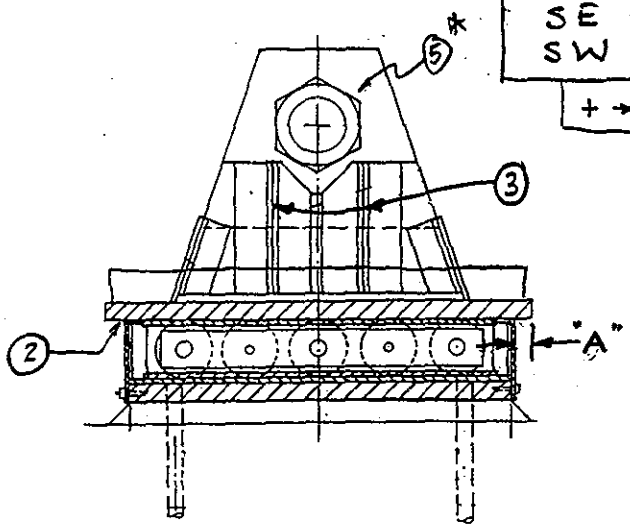

W. ELEV.

B16-18

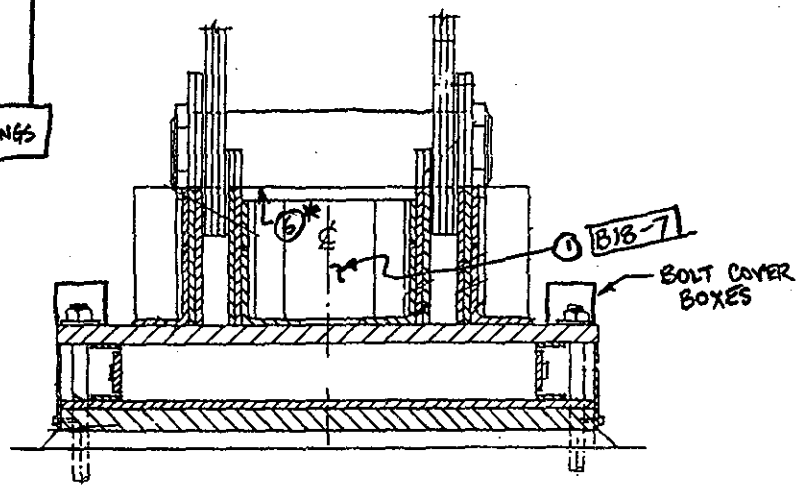

S ELEV.

E BEARING

PIER 6 SPAN 6

NOTES:

1. FOAM IN CAVITY HAS DETERIORATED & CAVITY IS NOW FILLING WITH DEBRIS
2. SIGNS OF MOVEMENT UNDER L.L., GREASE LEAKAGE ON W SIDE ONLY.
3. UPTO 3/4" (1R) BETWEEN O.S.L. OF VERT. STIFFENER & S
4. RUST STAINING
5. * UPTO 1/4" PITT., 1" ⌀ ON W. EXT. PIN ⌀
6. * HVY RUST W/ UPTO 1/16" LOSS ON BOT. OF PIN.

* FP, EL 8/19/98

BEARINGS

DEPARTMENT OF THE ARMY
NEW ENGLAND DISTRICT CORPS OF ENGINEERS

BOURNE HIGHWAY BRIDGE
ROUTINE INSPECTION

NOTES BY: LICHTENSTEIN CONSULTING ENGINEERS (WD)

JOB #1986 DATE: 7/28/98

CREW: FP, PWN SHEET 1 OF 24

145/227

GEN. NOTE: MED TO HVY RUST ON ALL SURFACES WITH SOME RIVET HEADS HVY. RUST

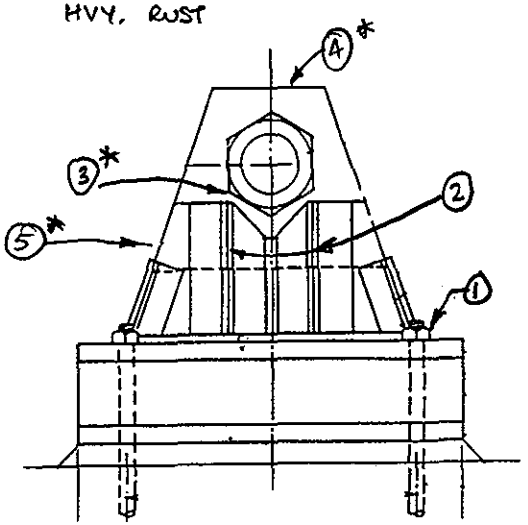

E ELEV.

B16-24

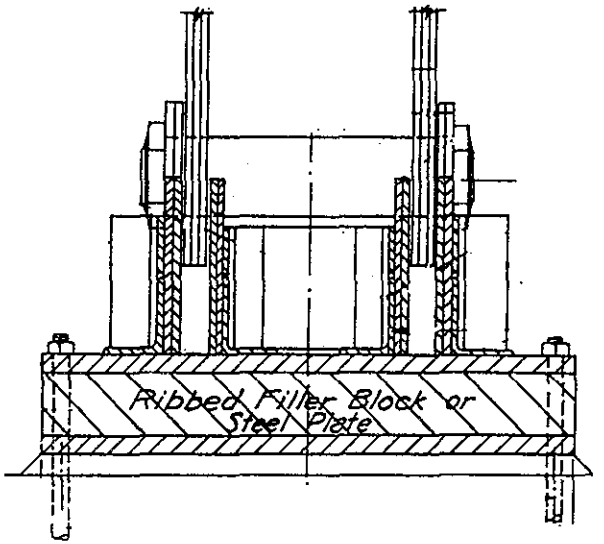

N ELEV.

W BEARING

~~PIER~~ ABUT N. SPAN 6

NOTES:
1. N.E. ANCHOR NUT CORRODING (BEGINNING TO MUSHROOM)
2. UPTO 3/4" (IR) BET. OSL OF VERT STIFF. ∡ (E SIDE)
3.* UPTO 1/16" PITT. ON PIN PL BELOW PIN NUT (E. ELEV.)
4.* 1/16" PITT. x 5" LONG W/ UPTO 1/4" (IR), W. ELEV.
5.* APPROX. 1/3 FOAM FILL MISSING., S. SIDE.

*FP, EL 8/19/98

BEARINGS

DEPARTMENT OF THE ARMY
NEW ENGLAND DISTRICT CORPS OF ENGINEERS

BOURNE HIGHWAY BRIDGE
ROUTINE INSPECTION

NOTES BY: LICHTENSTEIN CONSULTING ENGINEERS

JOB #1986 | DATE: 7/28/98

CREW: FP, PWN | SHEET 7 OF 24

146
227

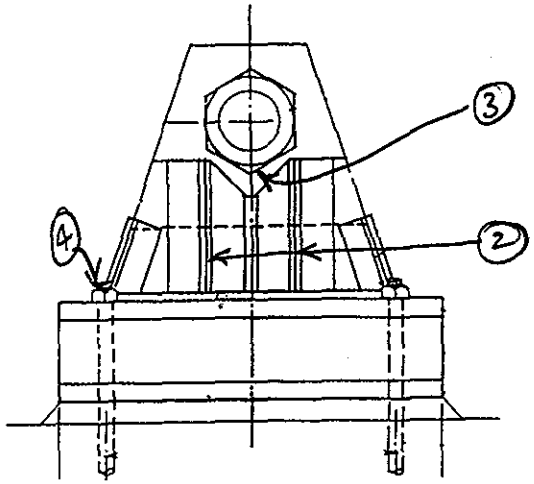

W ELEV. B17-2

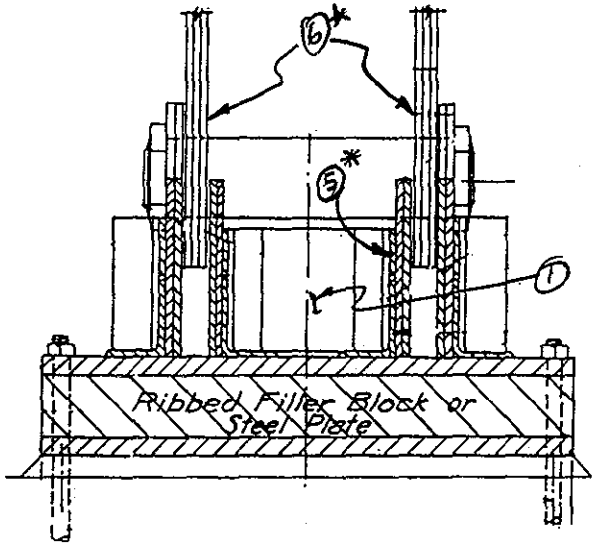

N ELEV.

NOTE: ANCHOR BOLT NUTS TIGHT*

E BEARING

~~PIER~~ ABUT N. SPAN 6

NOTES:

1. FOAM DETERIORATING & CAVITY FILLING W/ DEBRIS
2. UPTO 1/2" (TR) BET OSL OF VERT STIFF. & S (ONLY W. SIDE)
3. HR FORMING AT BOT. ON PIN NUT & PIN PL W/ UPTO 1/8" LOSS.
4. NE ANCHOR BOLT IS MUSHROOMING
5. * E.&W. INT. PIN PL, HR W/ UPTO 1/8" PITTING 8" L x 2" H BELOW PIN.
6. * UPTO 3/8" x 12" L. PITT. (W. PL), UPTO 1/4" x 12" L. PITT. (E. PL)

*FP, EL 8/19/98

BEARINGS

DEPARTMENT OF THE ARMY
NEW ENGLAND DISTRICT CORPS OF ENGINEERS

BOURNE HIGHWAY BRIDGE
ROUTINE INSPECTION

NOTES BY: LICHTENSTEIN CONSULTING ENGINEERS (H2)

JOB #1986 | DATE: 7/28/98

CREW: FP, PWN | SHEET 6 OF 24

(122) (147)

IV. SUBSTRUCTURE

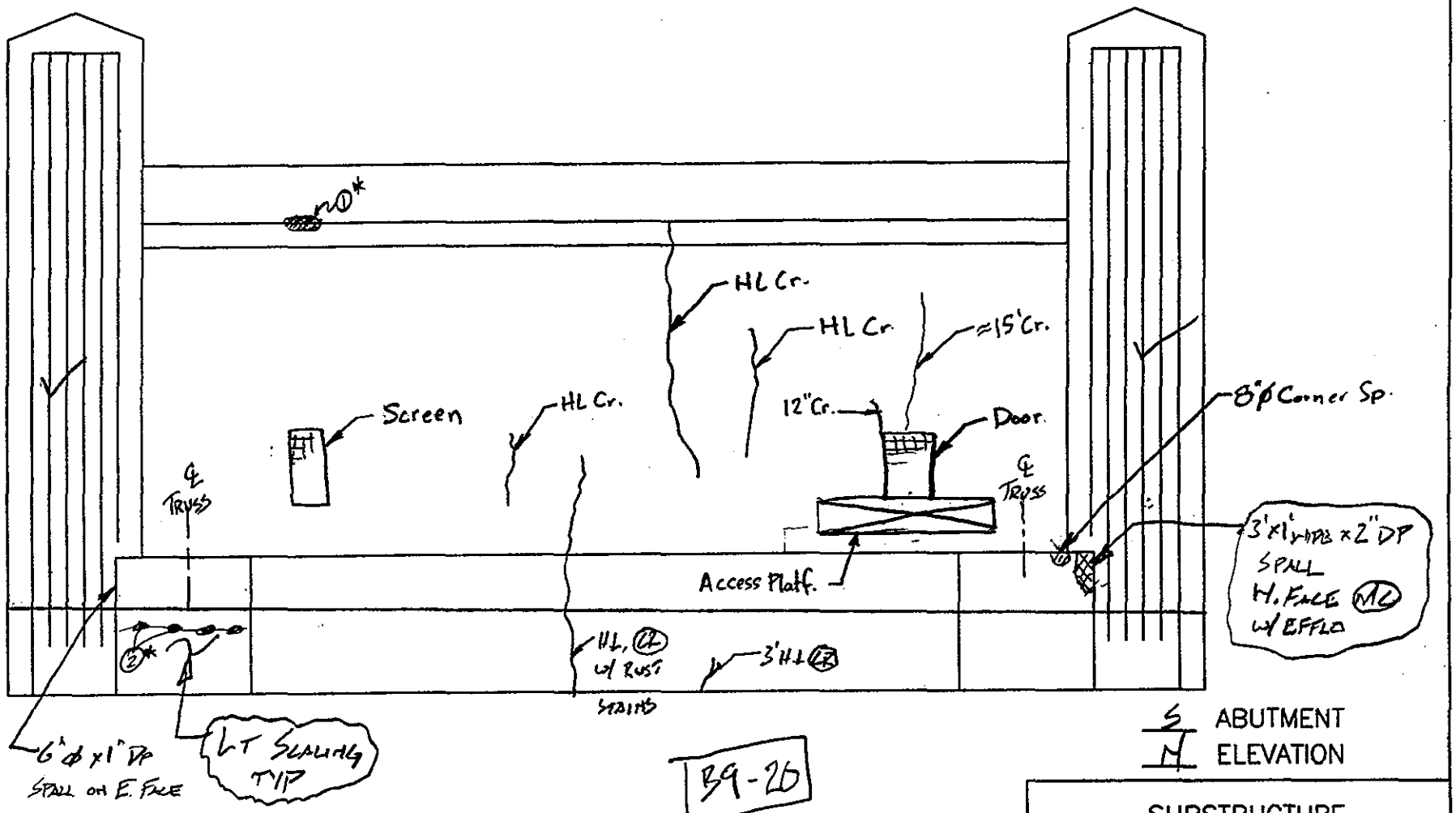

B9-20

NOTES:

updated 7/28/98 SD, W²

①* - 2'x1' x 3" corner spall w/ Efflo.

②* - Light surface spalls @ constn. JT.

* FP, EL 8/19/98

SUBSTRUCTURE

DEPARTMENT OF THE ARMY
NEW ENGLAND DISTRICT CORPS OF ENGINEERS

BOURNE HIGHWAY BRIDGE
ROUTINE INSPECTION

NOTES BY: LICHTENSTEIN CONSULTING ENGINEERS (W²)

JOB #1986 | DATE: 7/24/98

CREW: W², SD, PWM | SHEET 7 OF 8

148
227

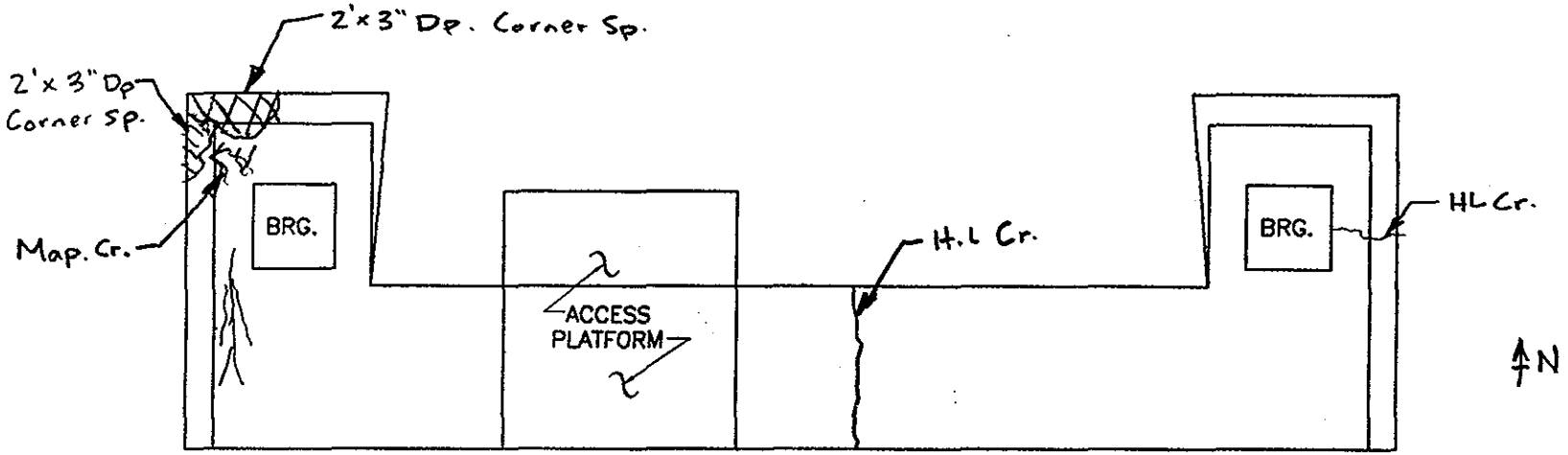

PLAN S. ABUTMENT

NOTES:

SUBSTRUCTURE	
DEPARTMENT OF THE ARMY NEW ENGLAND DISTRICT CORPS OF ENGINEERS	
BOURNE HIGHWAY BRIDGE ROUTINE INSPECTION	
NOTES BY: LICHTENSTEIN CONSULTING ENGINEERS W²	
JOB #1986	DATE: 7/28/98
CREW: SD, W²	SHEET 28 OF 28

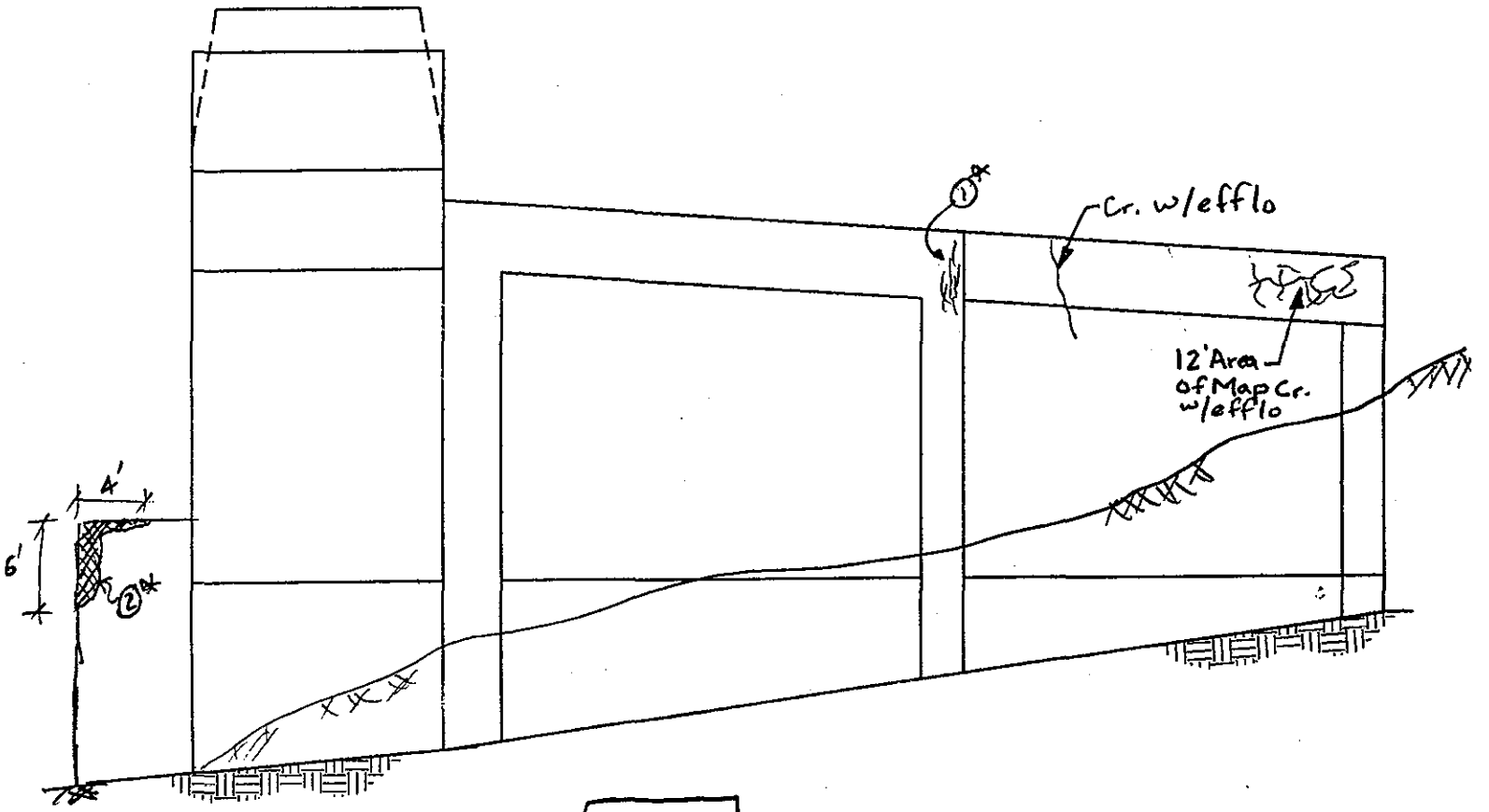

B15 - 21

S ABUTMENT
W ELEVATION

NOTES:
- Hvy Veg. along wingwall
- ①* MAP CRACKING W/ EFFLO.
- ②* UPTO 8" WIDE x 3" DEEP SPALL @ CORNER

* FP, EZ 8/18/98

SUBSTRUCTURE	
DEPARTMENT OF THE ARMY NEW ENGLAND DISTRICT CORPS OF ENGINEERS	
BOURNE HIGHWAY BRIDGE ROUTINE INSPECTION	
NOTES BY: LICHTENSTEIN CONSULTING ENGINEERS (W²)	
JOB #1986	DATE: 7/28/98
CREW: SD, W²	SHEET 27 OF 28

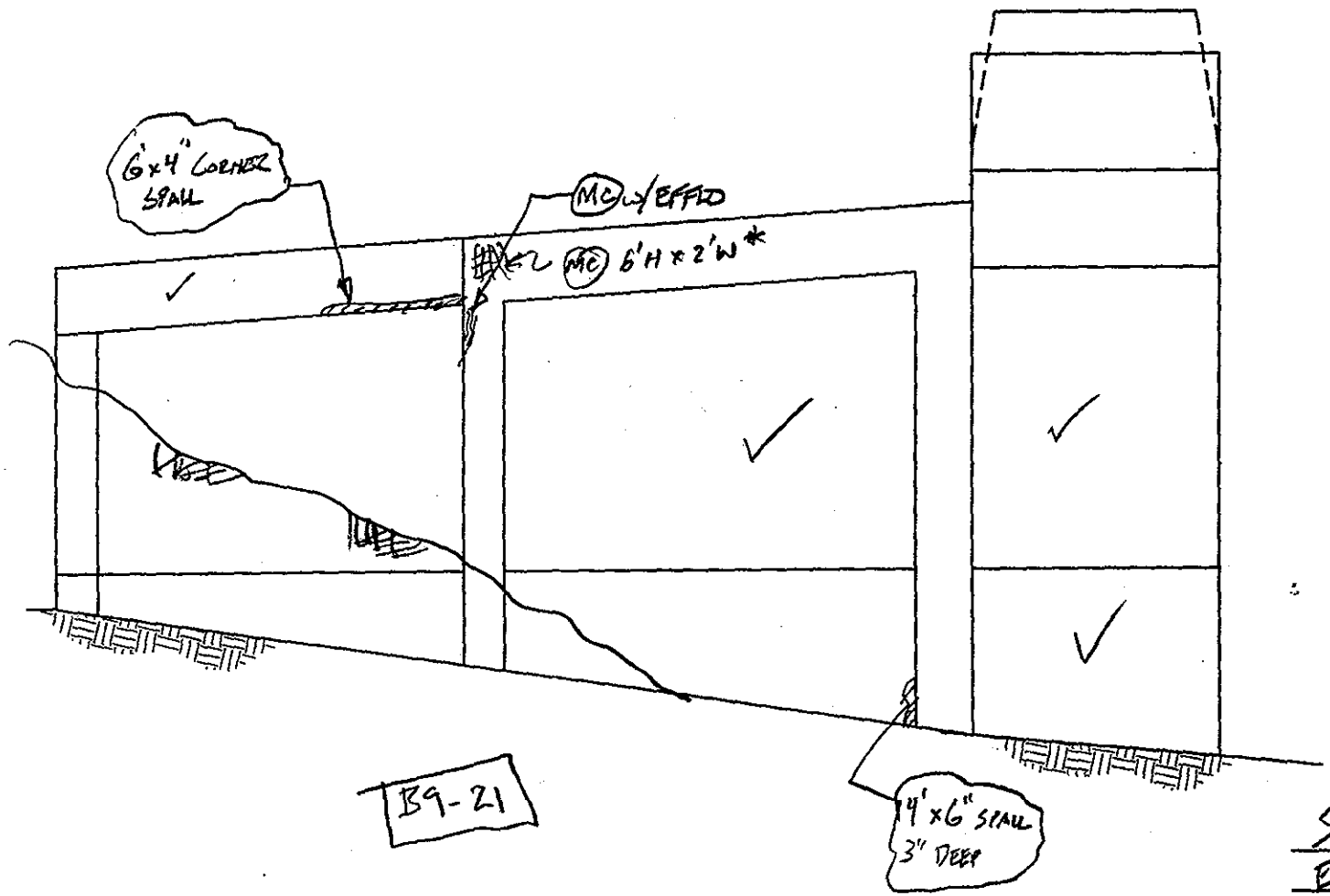

S ABUTMENT
E ELEVATION

NOTES:

SUBSTRUCTURE

DEPARTMENT OF THE ARMY
NEW ENGLAND DISTRICT CORPS OF ENGINEERS

BOURNE HIGHWAY BRIDGE
ROUTINE INSPECTION

NOTES BY: LICHTENSTEIN CONSULTING ENGINEERS

JOB #1986 | DATE: 7/24/98

CREW: WT, SD, PHA | SHEET 8 OF 8

* FP, EL 8/19/98

151 227

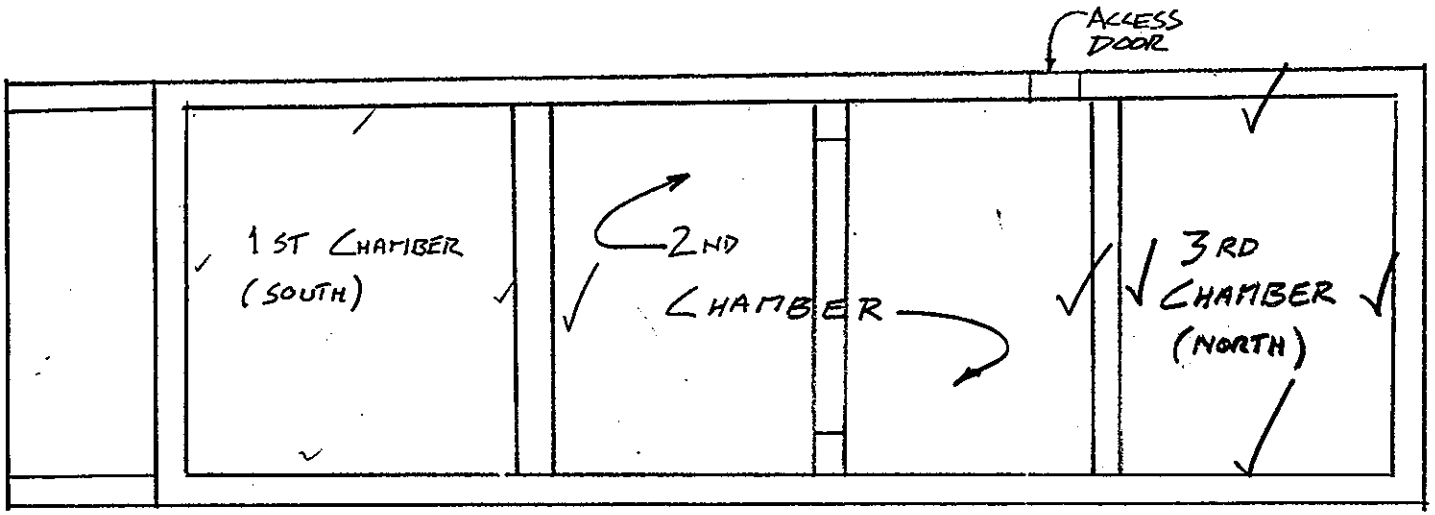

SOUTH ABUTMENT
PLAN VIEW

NOTES:

SUBSTRUCTURE	
DEPARTMENT OF THE ARMY NEW ENGLAND DISTRICT CORPS OF ENGINEERS	
BOURNE HIGHWAY BRIDGE ROUTINE INSPECTION	
NOTES BY: LICHTENSTEIN CONSULTING ENGINEERS	
JOB #1986	DATE: 7/28/98
CREW: FP, PWN	SHEET 8 OF 24

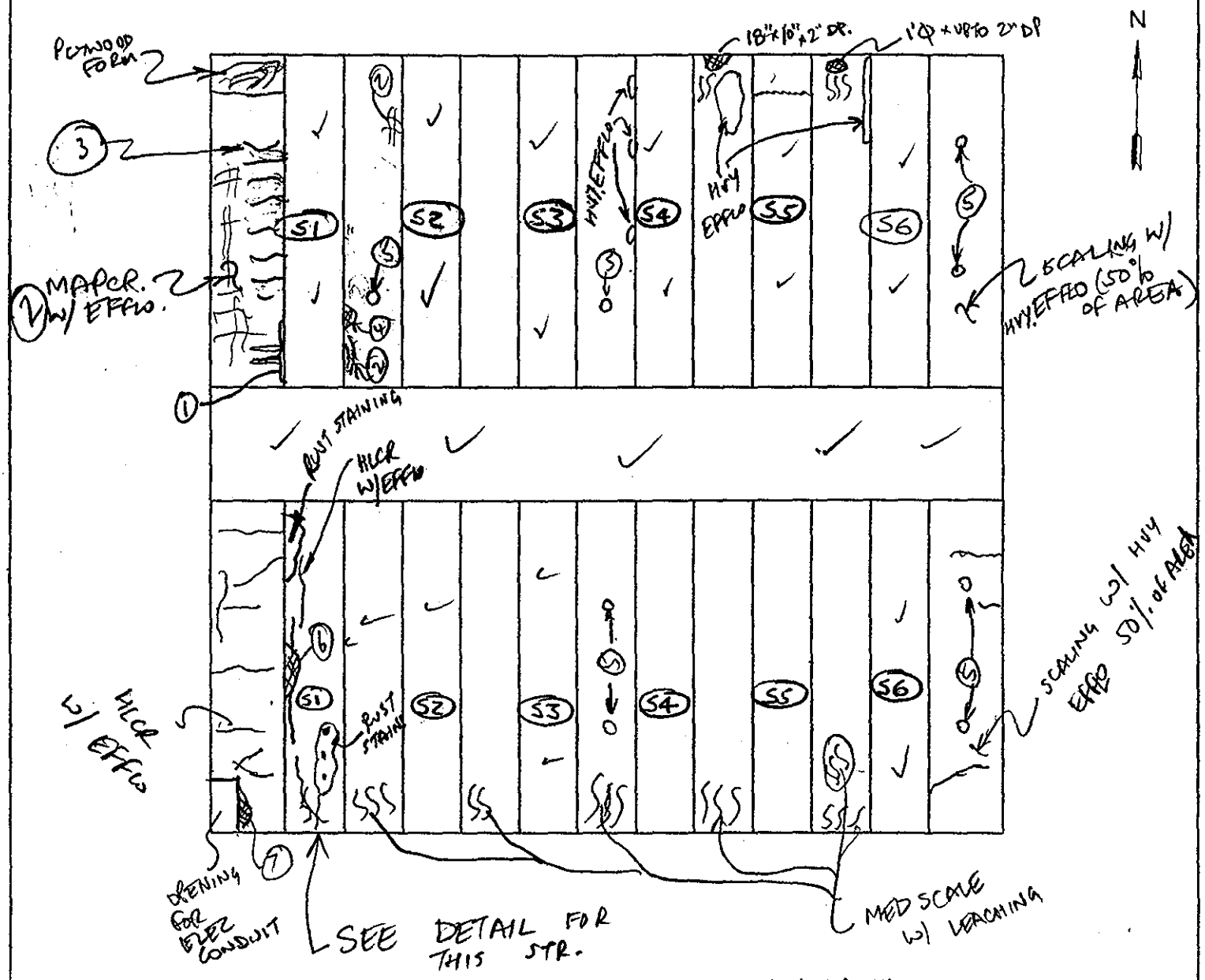

PLAN VIEW (LOOKING DOWN UNDERSIDE OF DECK)

5 ABUTMENT CHAMBER 1

NOTES:
1. RUST STAINING & HVY SCALE ON W. FACE OF S1
2. MAP CRACKING
3. HLCR W/ RUST STAINING
4. 6"L x 4"W x 1" DP SPALL
5. RUSTING PIPE ≈ 2" Φ
6. CORNER SPALL 18" x 4" x 3" DP W/ EFFLO STALACTITES
7. SPALL W/ EXP. REBAR ALONG EDGE OF OPENING FOR ELEC CONDUITS. (30"L x 4"W SPALL x 3" DP)

SUBSTRUCTURE

DEPARTMENT OF THE ARMY
NEW ENGLAND DISTRICT CORPS OF ENGINEERS

BOURNE HIGHWAY BRIDGE
ROUTINE INSPECTION

NOTES BY: LICHTENSTEIN CONSULTING ENGINEERS

JOB #1986 | DATE: 7/28/98

CREW: FY, PWN | SHEET 9 OF 24

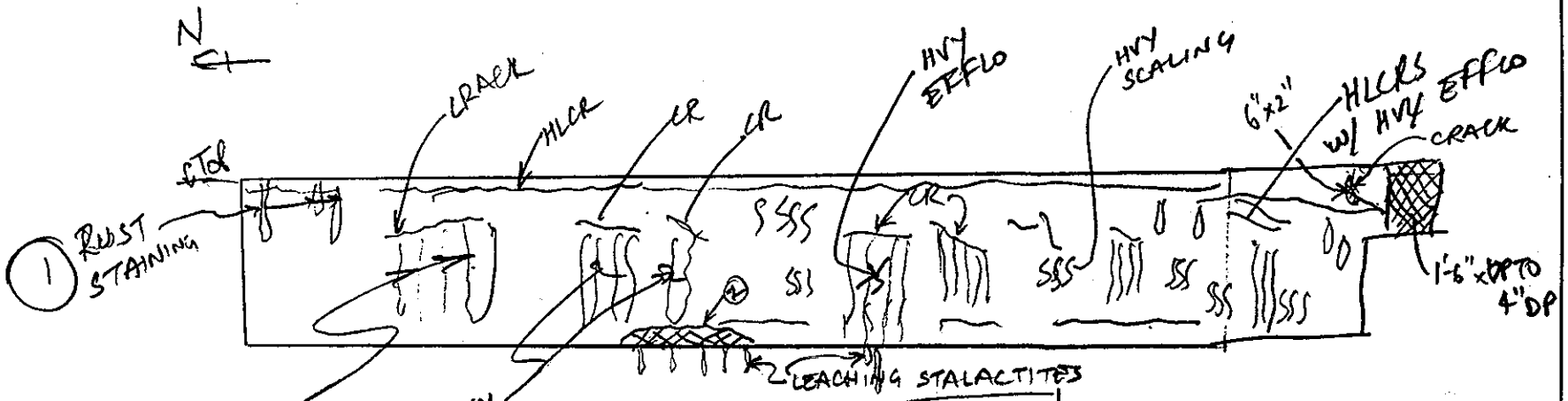

STR 1 W. ELEV. B17-6 B17-7

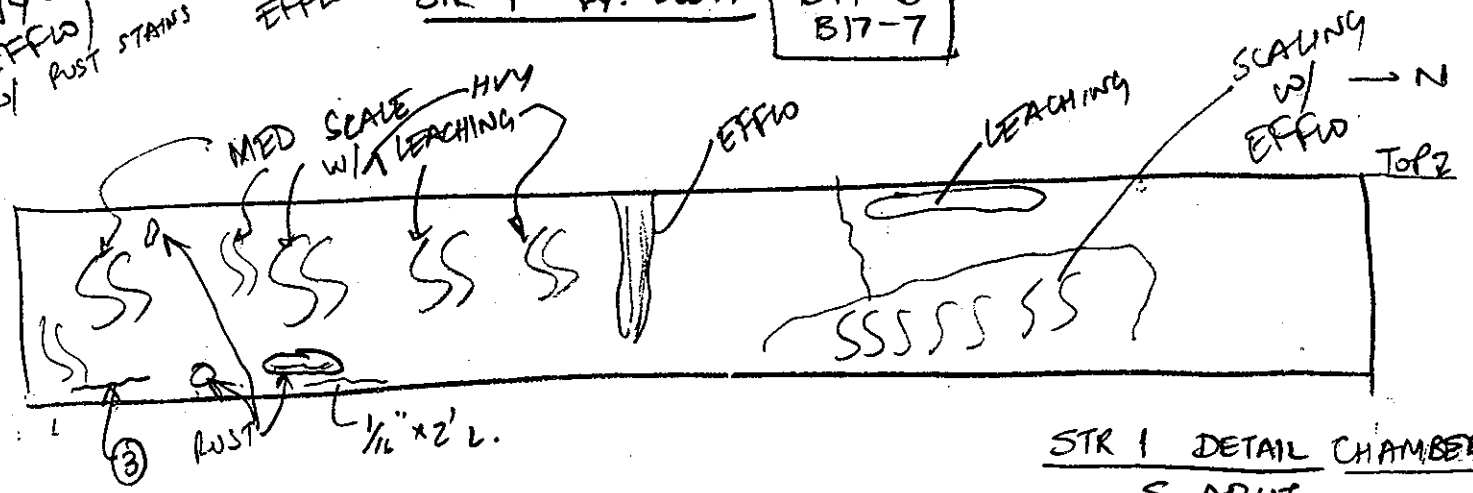

STR 1 DETAIL CHAMBER 1
S. ABUT

STR 1 E. ELEV B17-4 B17-5

2 CORNER SPALL 18" L x 3" H
3 CR. UP TO 3/16" x 2' L

SUBSTRUCTURE	
DEPARTMENT OF THE ARMY NEW ENGLAND DISTRICT CORPS OF ENGINEERS	
BOURNE HIGHWAY BRIDGE ROUTINE INSPECTION	
NOTES BY: LICHTENSTEIN CONSULTING ENGINEERS	
JOB #1986	DATE: 7/28/98
CREW: FP, IWN	SHEET 10 OF 24

154
227

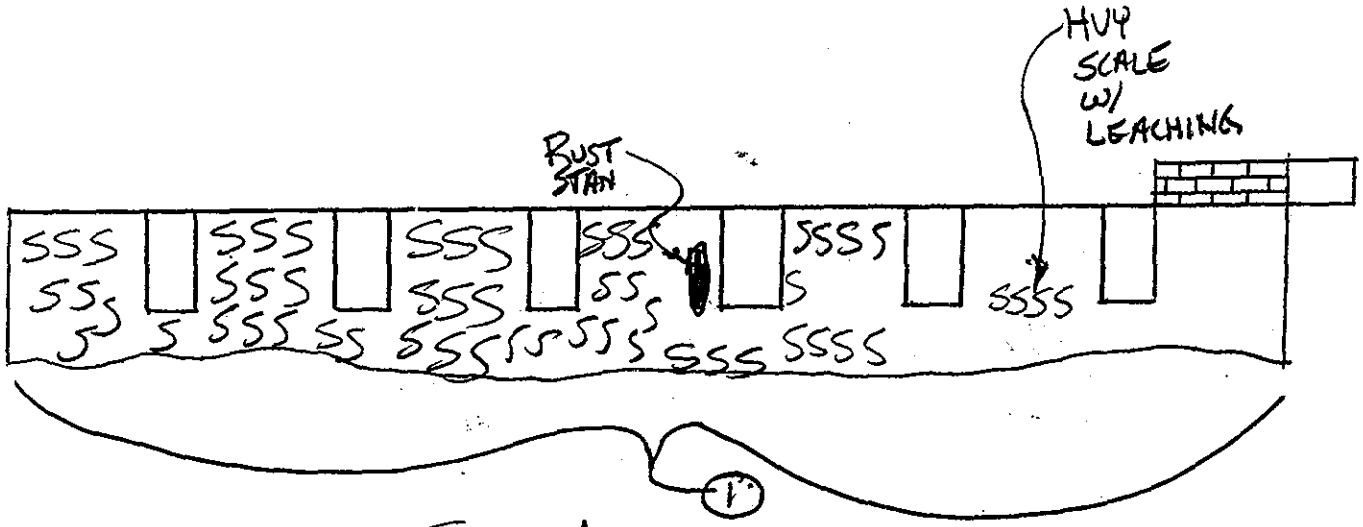

SOUTH ABUTMENT
CHAMBER 1
SOUTH BACKWALL
NORTH ELEV.

NOTES: 1 MED SCALE W/ LEACHING

SUBSTRUCTURE

DEPARTMENT OF THE ARMY
NEW ENGLAND DISTRICT CORPS OF ENGINEERS

BOURNE HIGHWAY BRIDGE
ROUTINE INSPECTION

NOTES BY: LICHTENSTEIN CONSULTING ENGINEERS

JOB #1986 | DATE: 7/28/98

CREW: PWN FP | SHEET 11 OF 24

155
227

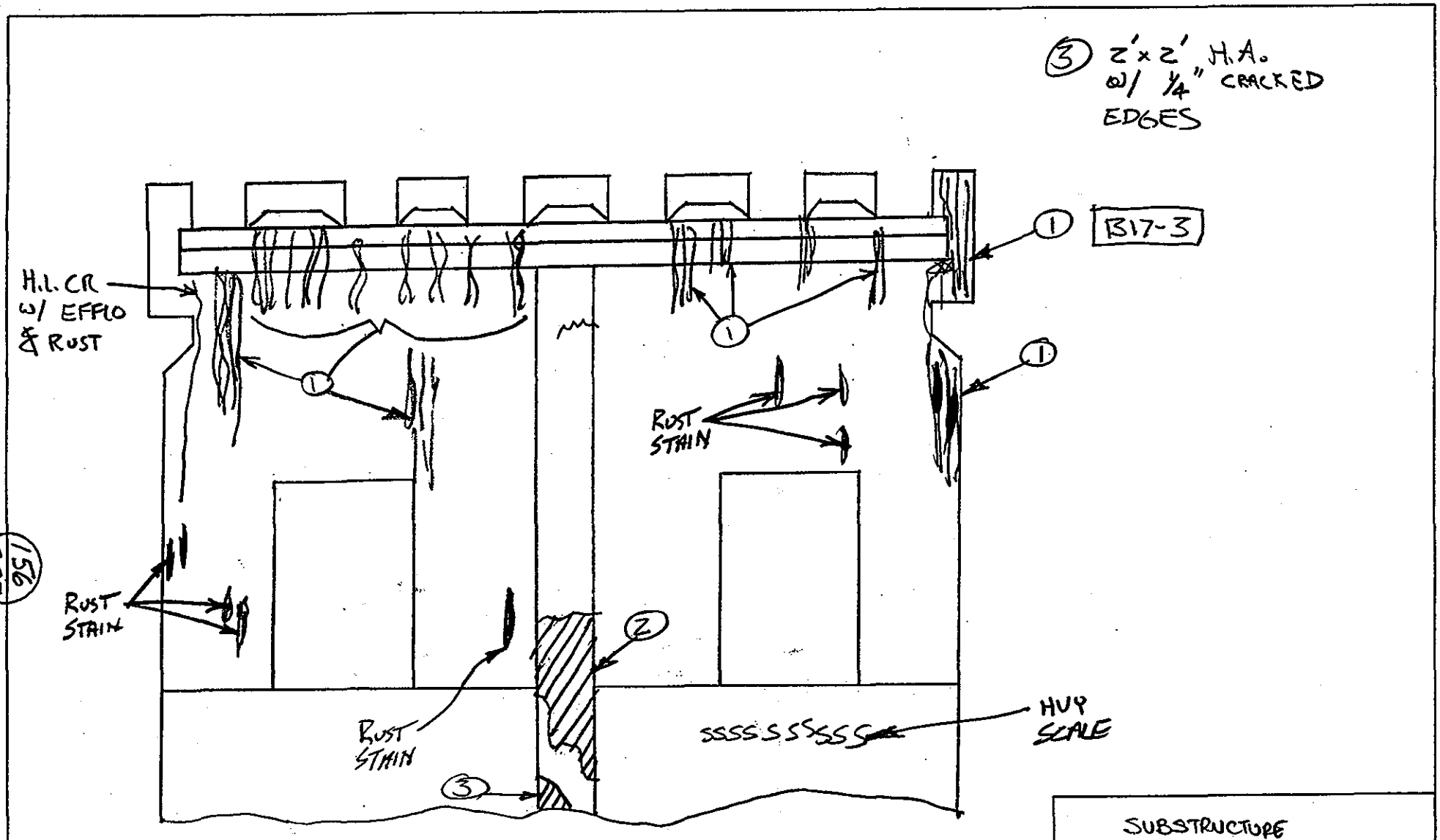

① MIX OF RUST & EFFLO.

② 3'W x 5'H HOLLOW AREA W/ 1/4" CRACKED EDGES

SOUTH ABUTMENT - CHAMBER 1

NORTH WALL - SOUTH ELEV.

SUBSTRUCTURE	
DEPARTMENT OF THE ARMY NEW ENGLAND DISTRICT CORPS OF ENGINEERS	
BOURNE HIGHWAY BRIDGE ROUTINE INSPECTION	
NOTES BY: LICHTENSTEIN CONSULTING ENGINEERS	
JOB #1986	DATE: 7/28/98
CREW: Pwon FP	SHEET 12 OF 24

156/227

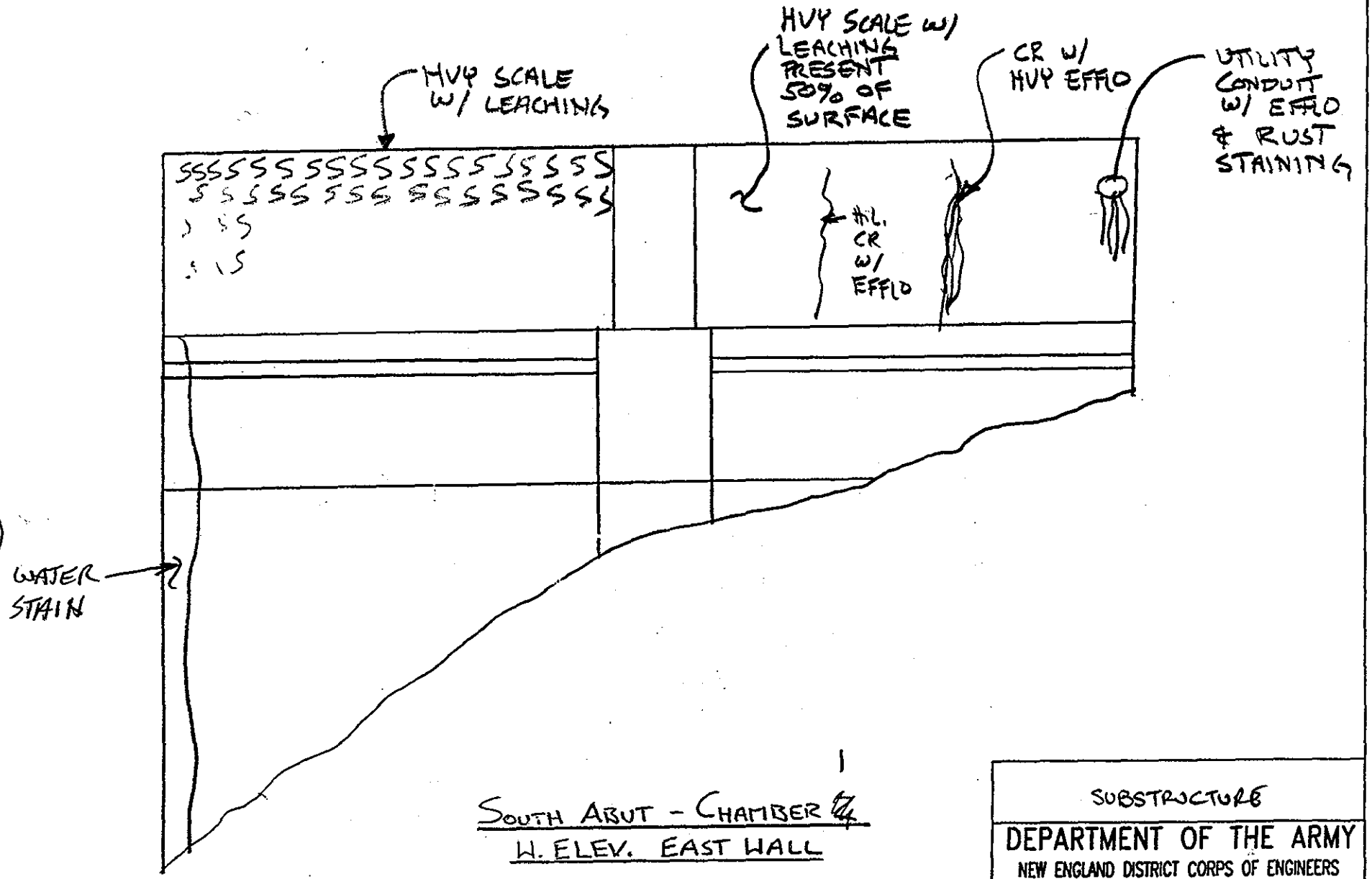

SOUTH ABUT - CHAMBER 1/4
W. ELEV. EAST WALL

SUBSTRUCTURE

DEPARTMENT OF THE ARMY
NEW ENGLAND DISTRICT CORPS OF ENGINEERS

BOURNE HIGHWAY BRIDGE
ROUTINE INSPECTION

NOTES BY: LICHTENSTEIN CONSULTING ENGINEERS

JOB #1986 | DATE: 7/28/88

CREW: [illegible] | SHEET 14 OF 4

(151/227)

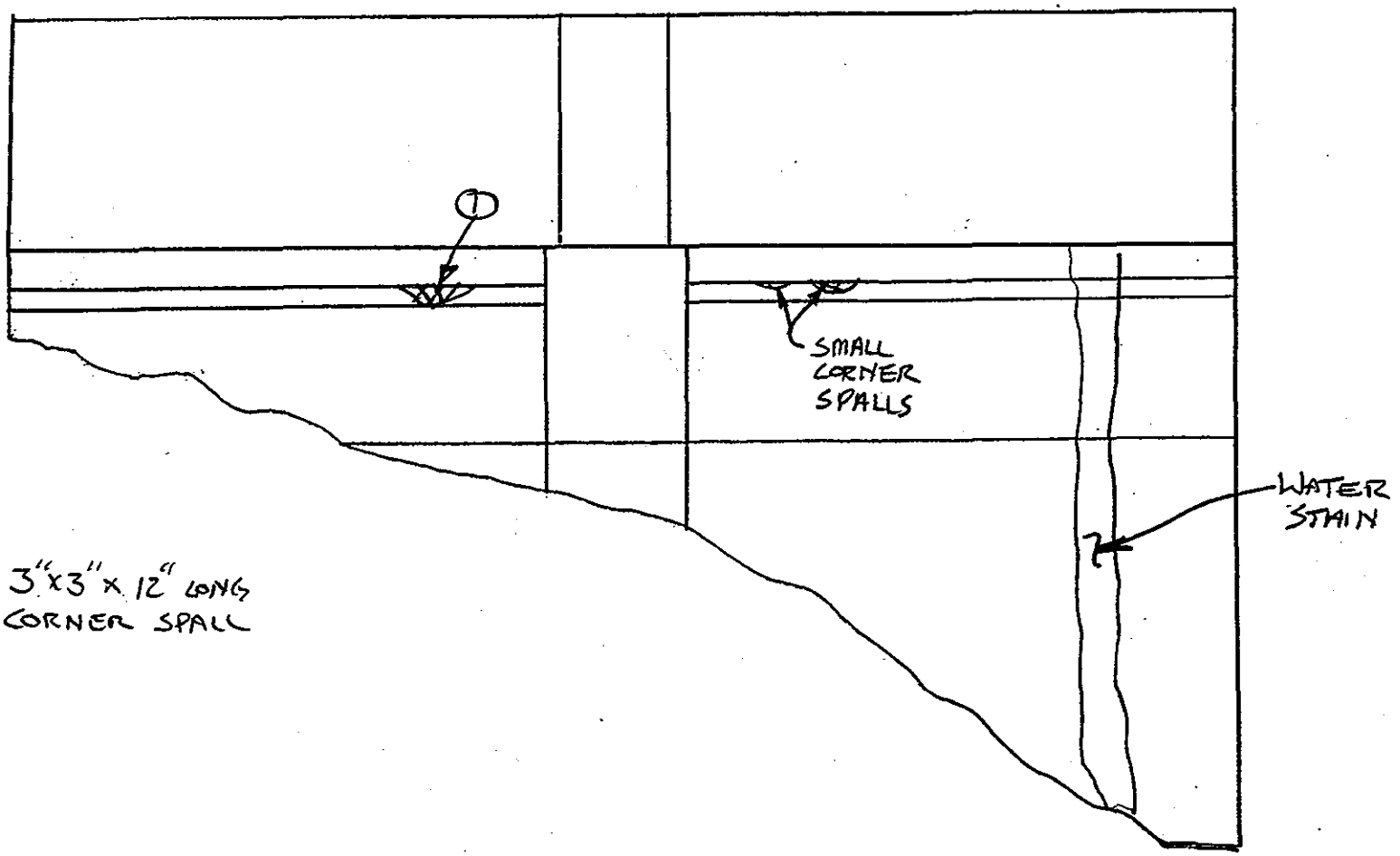

1 3"x3"x12" LONG CORNER SPALL

SOUTH ABUTMENT - CHAMBER 1

WEST INTERIOR WINGWALL - EAST ELEV.

SUBSTRUCTURE	
DEPARTMENT OF THE ARMY NEW ENGLAND DISTRICT CORPS OF ENGINEERS	
BOURNE HIGHWAY BRIDGE ROUTINE INSPECTION	
NOTES BY: LICHTENSTEIN CONSULTING ENGINEERS	
JOB #1986	DATE: 7/28/98
CREW: PWN FP	SHEET 13 OF 24

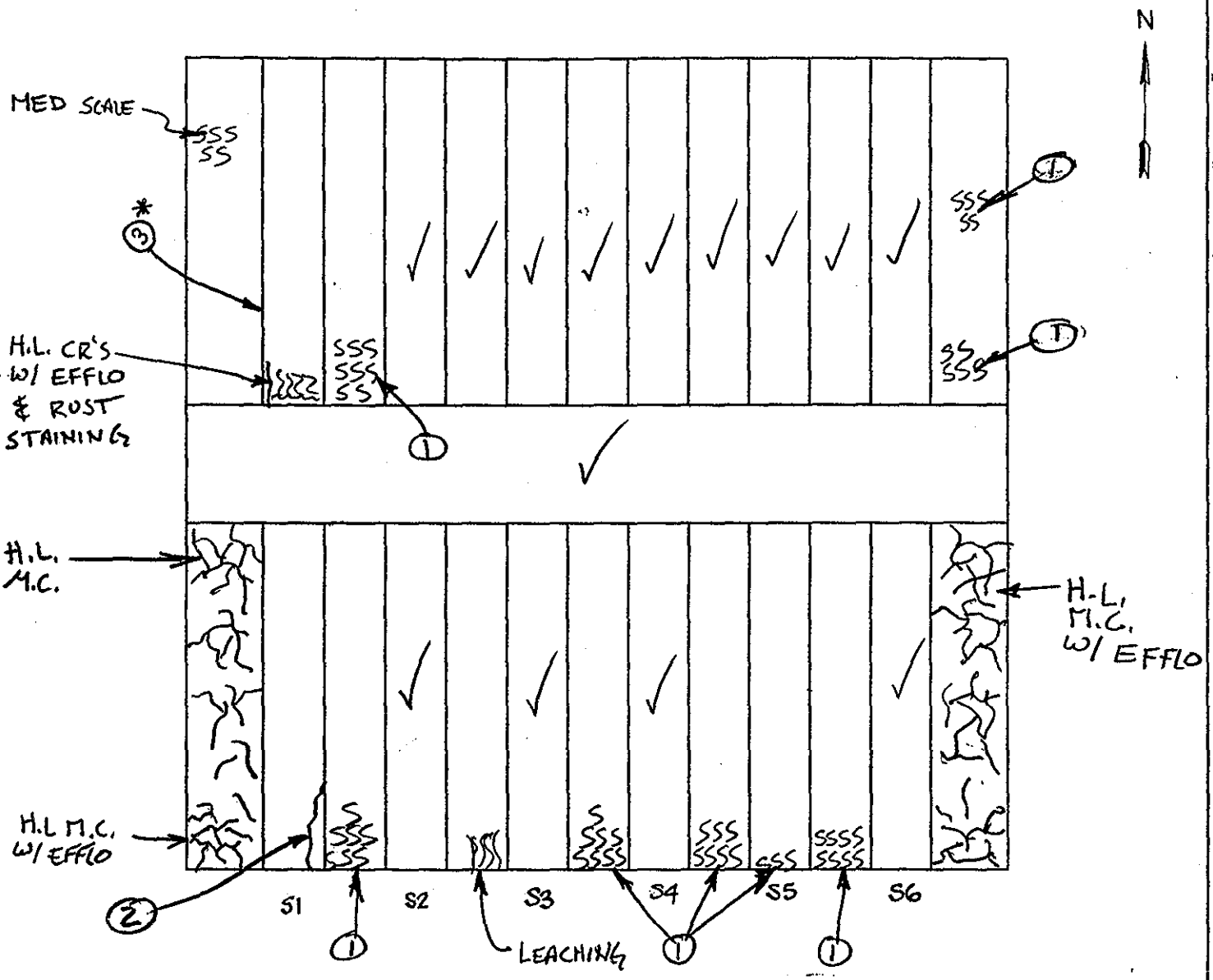

PLAN VIEW (LOOKING DOWN UNDERSIDE OF DECK)

S ABUTMENT CHAMBER 2

NOTES: (1) MED. SCALE W/ LEACHING
(2) H.L. CR W/ RUST STAIN
(3)* W. FACE OF STR.#1 HAS SEVERAL AREAS OF CRACKS W/ MEDIUM EFFLO. W/ ISOLATED HVY EFFLO AREAS & HONEY COMBING

*FP, EL 8/19/98

SUBSTRUCTURE	
DEPARTMENT OF THE ARMY NEW ENGLAND DISTRICT CORPS OF ENGINEERS	
BOURNE HIGHWAY BRIDGE ROUTINE INSPECTION	
NOTES BY: LICHTENSTEIN CONSULTING ENGINEERS	
JOB #1986	DATE: 7/28/98
CREW: PWN FP	SHEET 18 OF 24

① STEEL PROTRUDING FROM CONCRETE.
W/ ACTIVE CORROSION

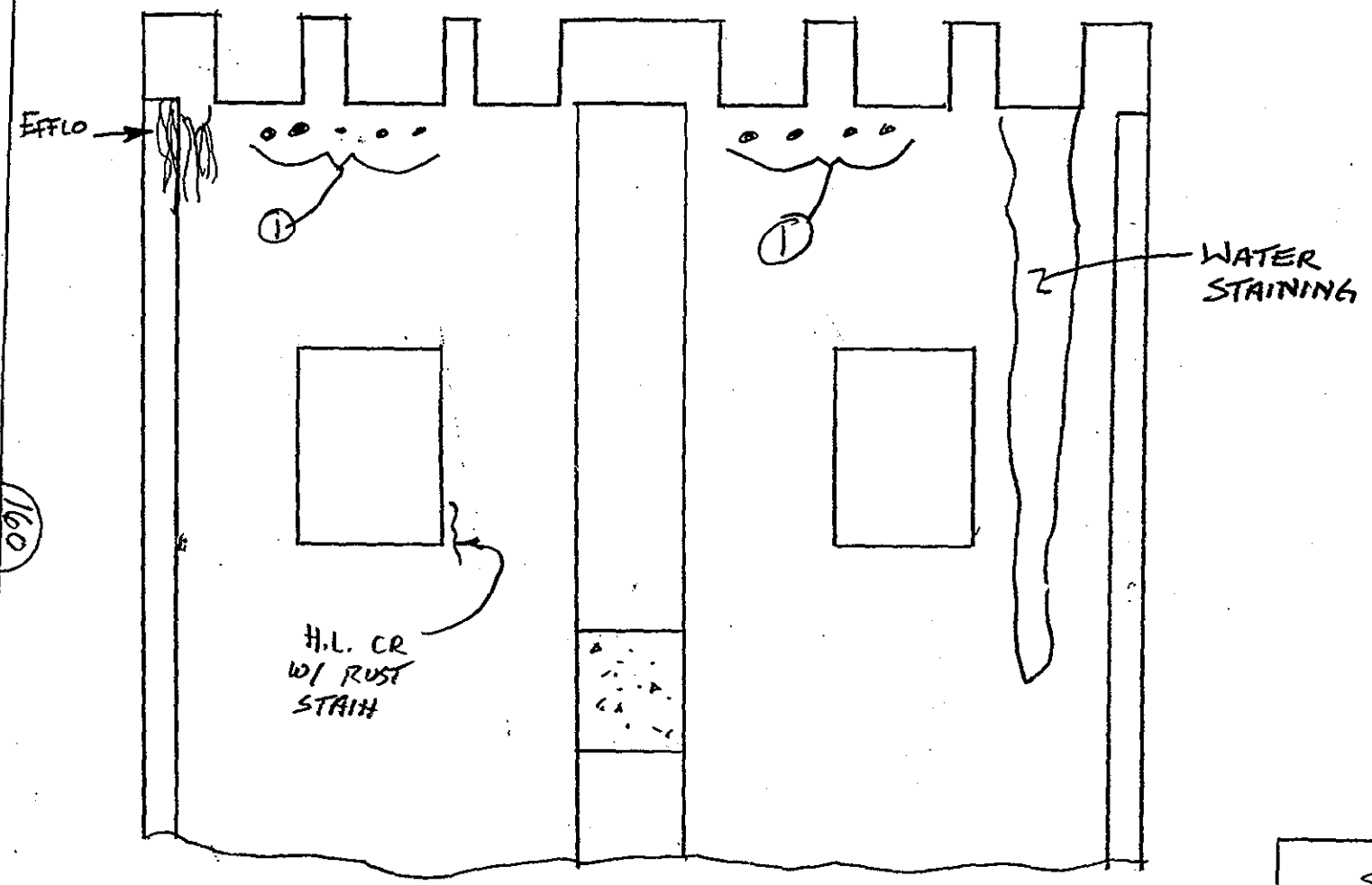

SOUTH ABUTMENT - CHAMBER 2
N. ELEV. SOUTH WALL

SUBSTRUCTURE	
DEPARTMENT OF THE ARMY NEW ENGLAND DISTRICT CORPS OF ENGINEERS	
BOURNE HIGHWAY BRIDGE ROUTINE INSPECTION	
NOTES BY: LICHTENSTEIN CONSULTING ENGINEERS	
JOB #1986	DATE: 7/28/98
CREW: PWN FP	SHEET 20 OF 24

160
227

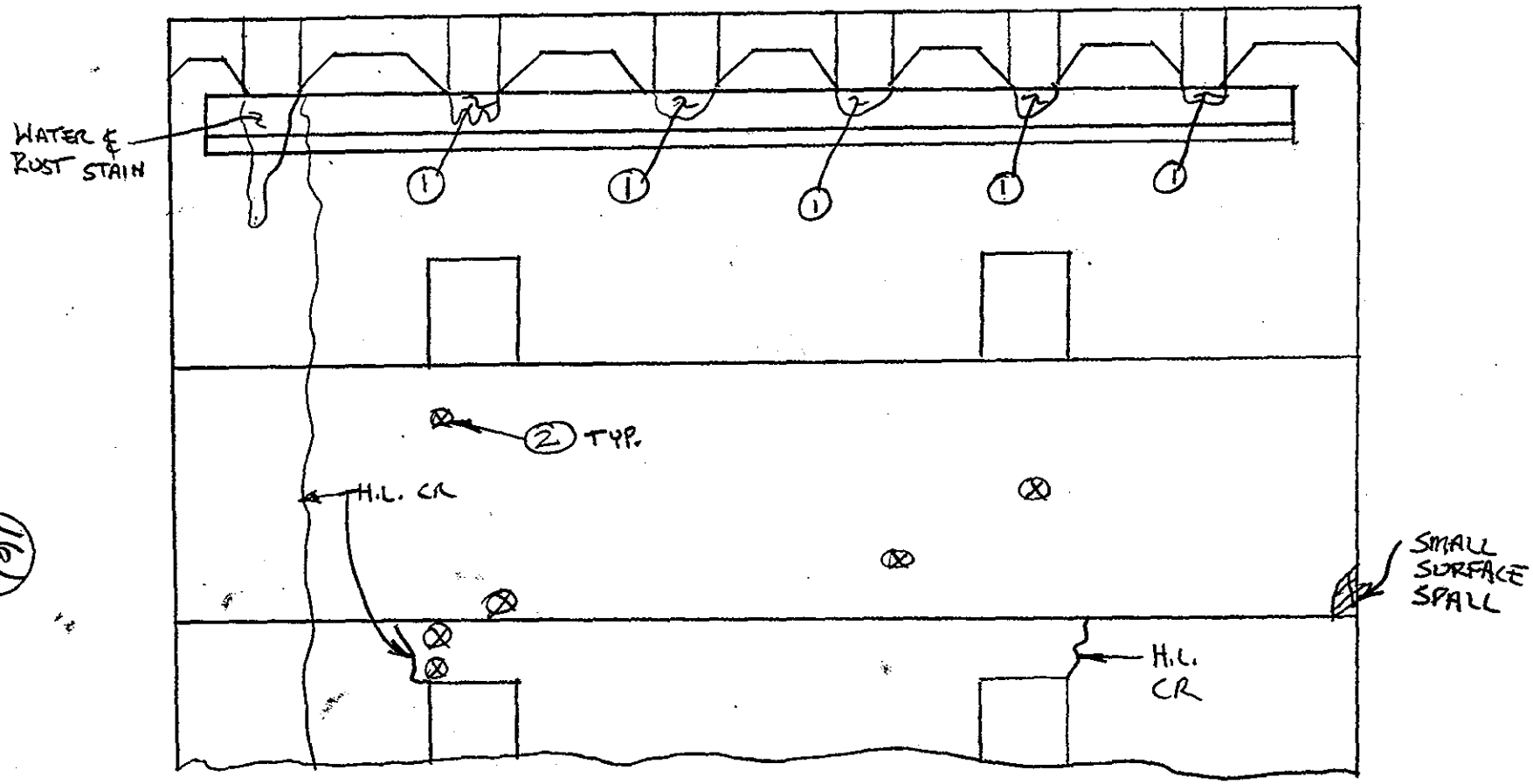

① RUST STAIN

② POPOUT W/ STEEL @ CENTER

SOUTH ABUT - CHAMBER 2
SOUTH ELEV - (VIEW B-B) NORTH WALL

SUBSTRUCTURE	
DEPARTMENT OF THE ARMY NEW ENGLAND DISTRICT CORPS OF ENGINEERS	
BOURNE HIGHWAY BRIDGE ROUTINE INSPECTION	
NOTES BY: LICHTENSTEIN CONSULTING ENGINEERS	
JOB #1986	DATE: 7/28/98
CREW: PWN FP	SHEET 19 OF 24

161
227

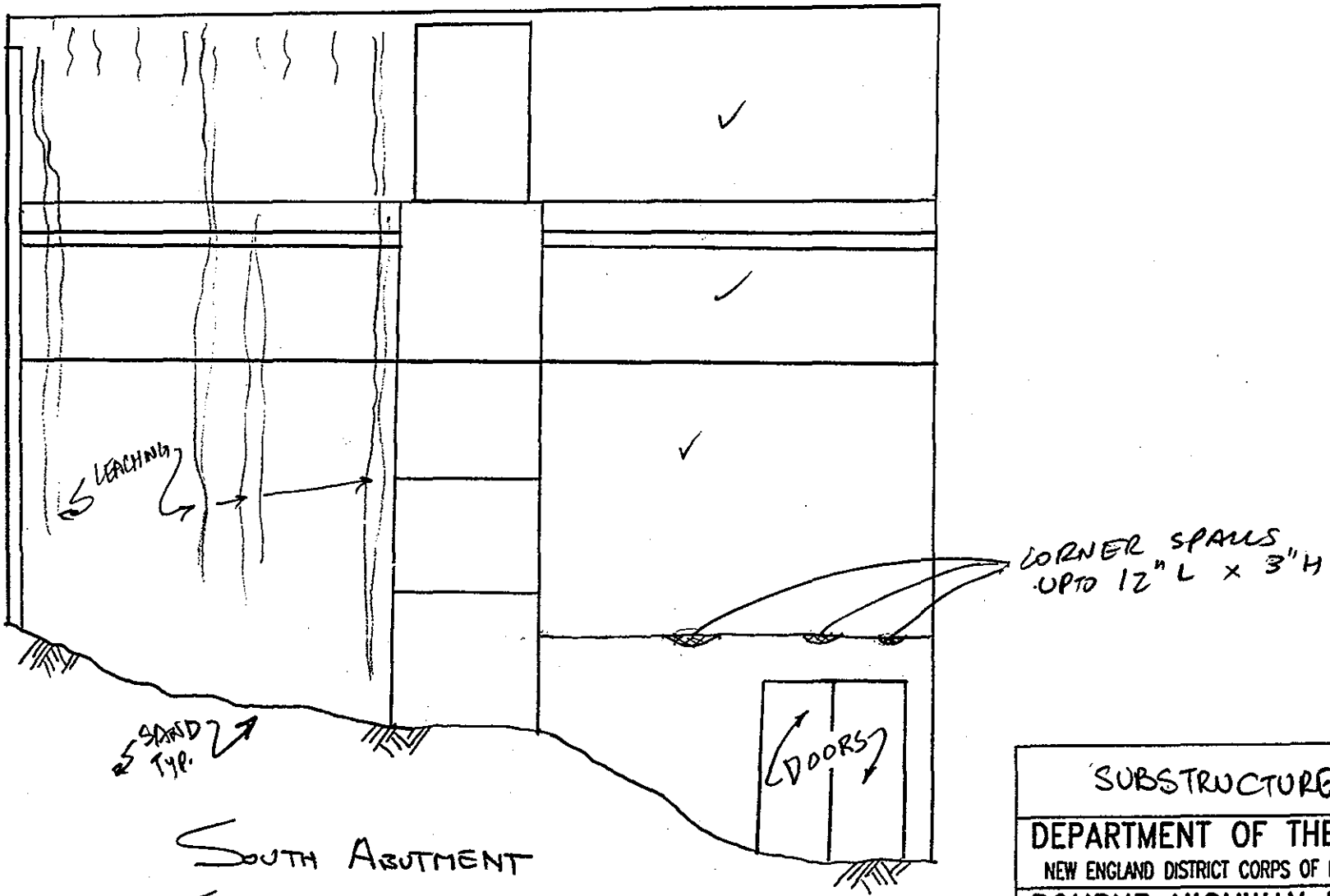

SOUTH ABUTMENT
CHAMBER 2
E. ELEV. W. WALL

SUBSTRUCTURE

DEPARTMENT OF THE ARMY
NEW ENGLAND DISTRICT CORPS OF ENGINEERS

BOURNE HIGHWAY BRIDGE
ROUTINE INSPECTION

NOTES BY: LICHTENSTEIN
CONSULTING ENGINEERS

JOB #1986	DATE: 7/28/98
CREW: FP PWN	SHEET 15 OF 24

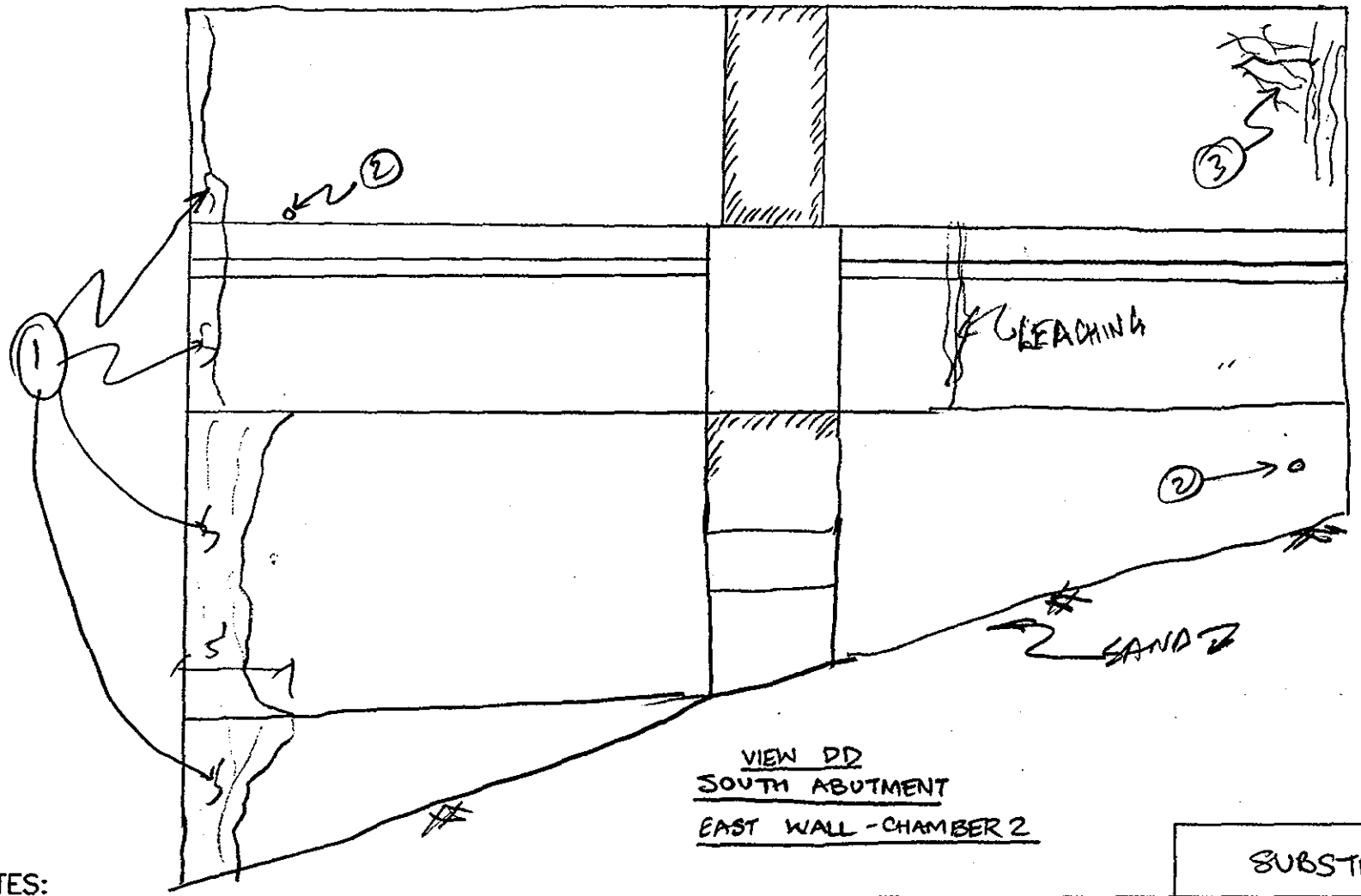

NOTES:

1. MOISTURE STAINING
2. REBAR STICKING OUT OF WALL
3. MAP CR. W/ EFFLO. (HWY)

SUBSTRUCTURE

DEPARTMENT OF THE ARMY
NEW ENGLAND DISTRICT CORPS OF ENGINEERS

BOURNE HIGHWAY BRIDGE
ROUTINE INSPECTION

NOTES BY: LICHTENSTEIN CONSULTING ENGINEERS

JOB #1986 | DATE: 7/28/98

CREW: FP, DWN | SHEET 16 OF 24

163/227

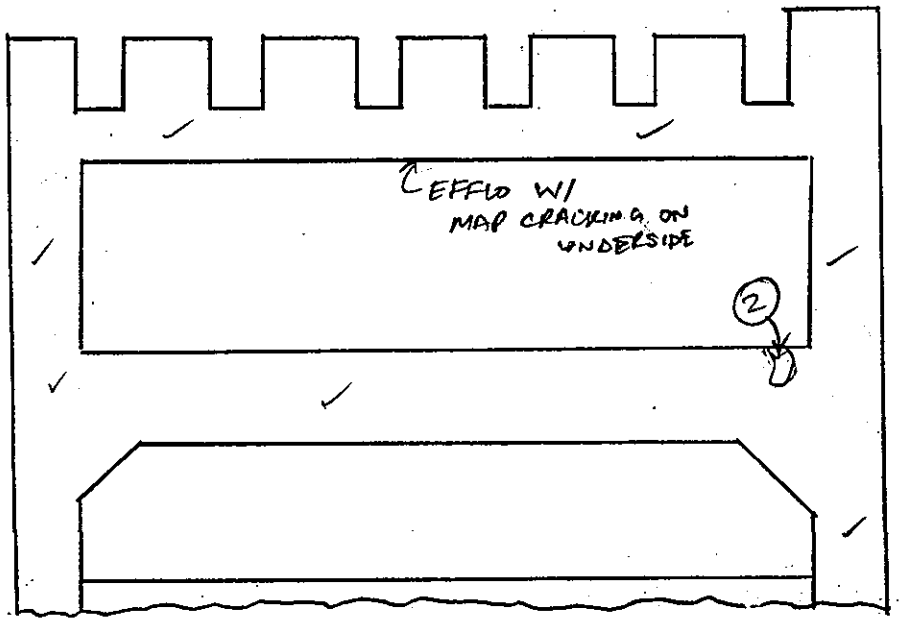

N. ELEV. CENTER BEAM

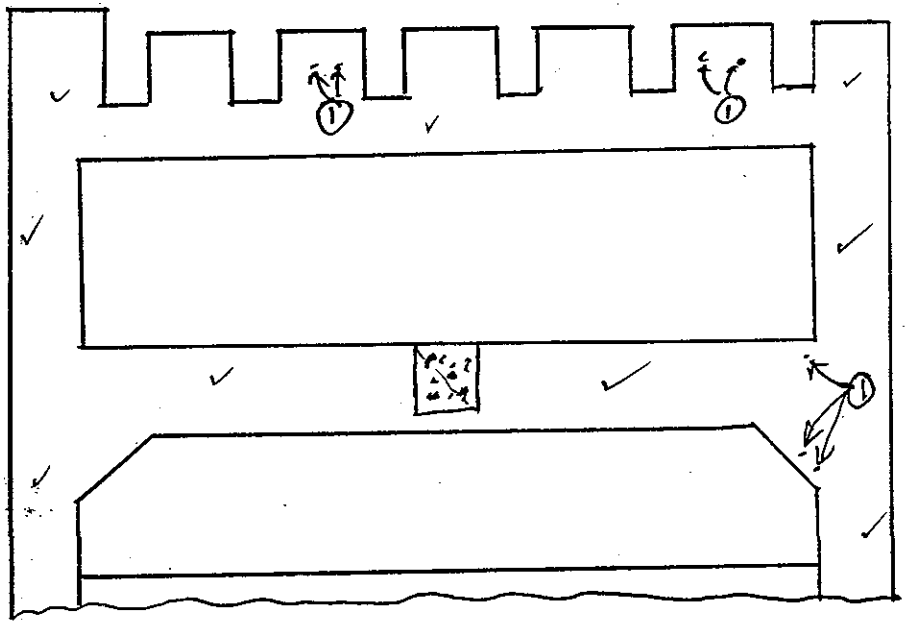

S. ELEV. CENTER BEAM

SOUTH ABUT- CHAMBER 2

NOTES:

1. WIRES STICKING OUT FROM WALL
2. EFFLO.

SUBSTRUCTURE	
DEPARTMENT OF THE ARMY NEW ENGLAND DISTRICT CORPS OF ENGINEERS	
BOURNE HIGHWAY BRIDGE ROUTINE INSPECTION	
NOTES BY: LICHTENSTEIN CONSULTING ENGINEERS	
JOB #1986	DATE: 7/28/98
CREW: PP AWN	SHEET 17 OF 24

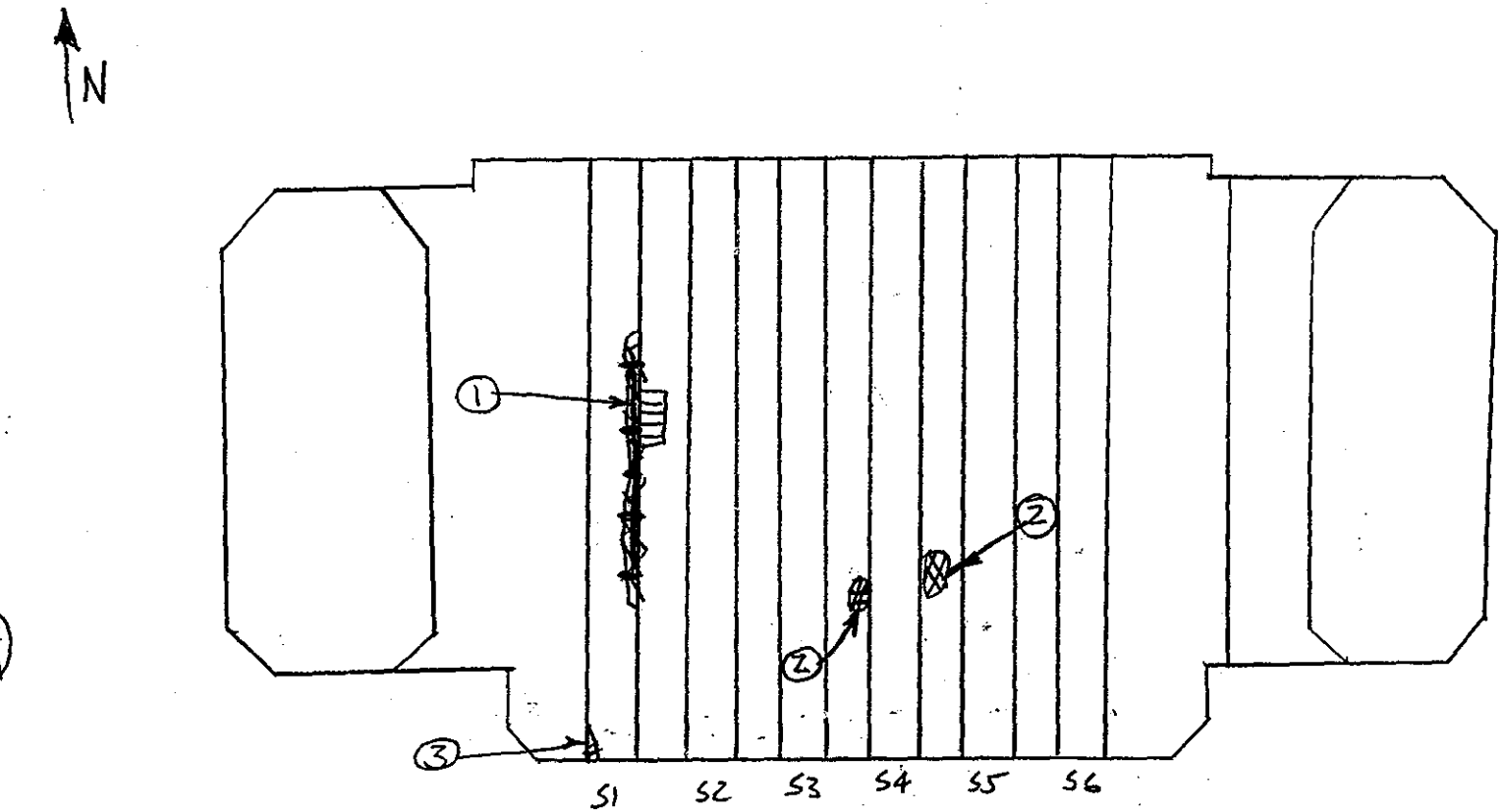

SOUTH ABUTMENT - CHAMBER 3

UNDERSIDE OF DECK

1. 10' LONG CORNER SPALL W/ EXPOSED REINF DIRECTLY BELOW SCUPPER - EFFLO & WATER LEAKAGE PRESENT
2. 6"ϕ SPALL W/ EXP. REINF.
3. RUST STAINING & LEACHING

SUBSTRUCTURE	
DEPARTMENT OF THE ARMY NEW ENGLAND DISTRICT CORPS OF ENGINEERS	
BOURNE HIGHWAY BRIDGE ROUTINE INSPECTION	
NOTES BY: LICHTENSTEIN CONSULTING ENGINEERS	
JOB #1986	DATE: 7/28/98
CREW: [illegible] FO	SHEET 14 OF 14

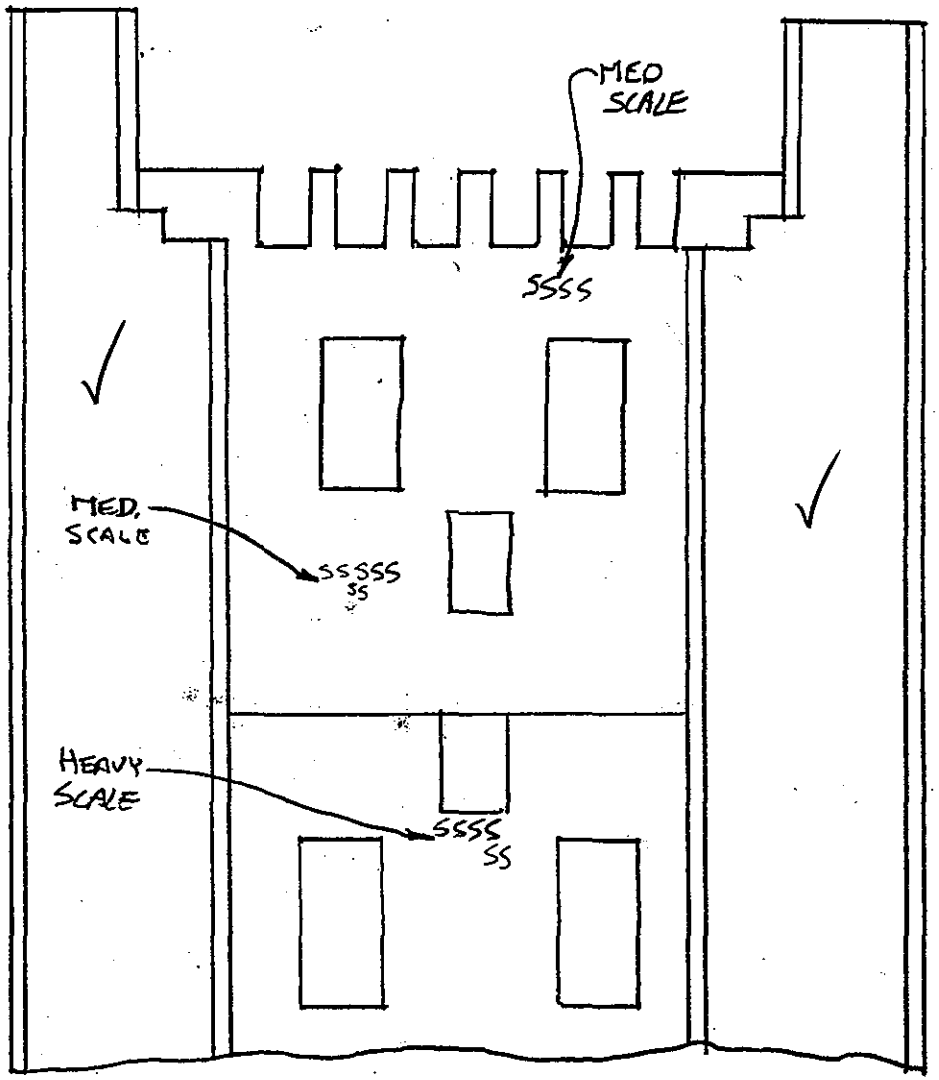

SOUTH ABUTMENT - CHAMBER 3
N. ELEV. S. WALL

SUBSTRUCTURE

DEPARTMENT OF THE ARMY
NEW ENGLAND DISTRICT CORPS OF ENGINEERS

BOURNE HIGHWAY BRIDGE
ROUTINE INSPECTION

NOTES BY: LICHTENSTEIN CONSULTING ENGINEERS (H)

JOB #1986	DATE: 7/28/98
CREW: PWN FP	SHEET 22 OF 24

166
227

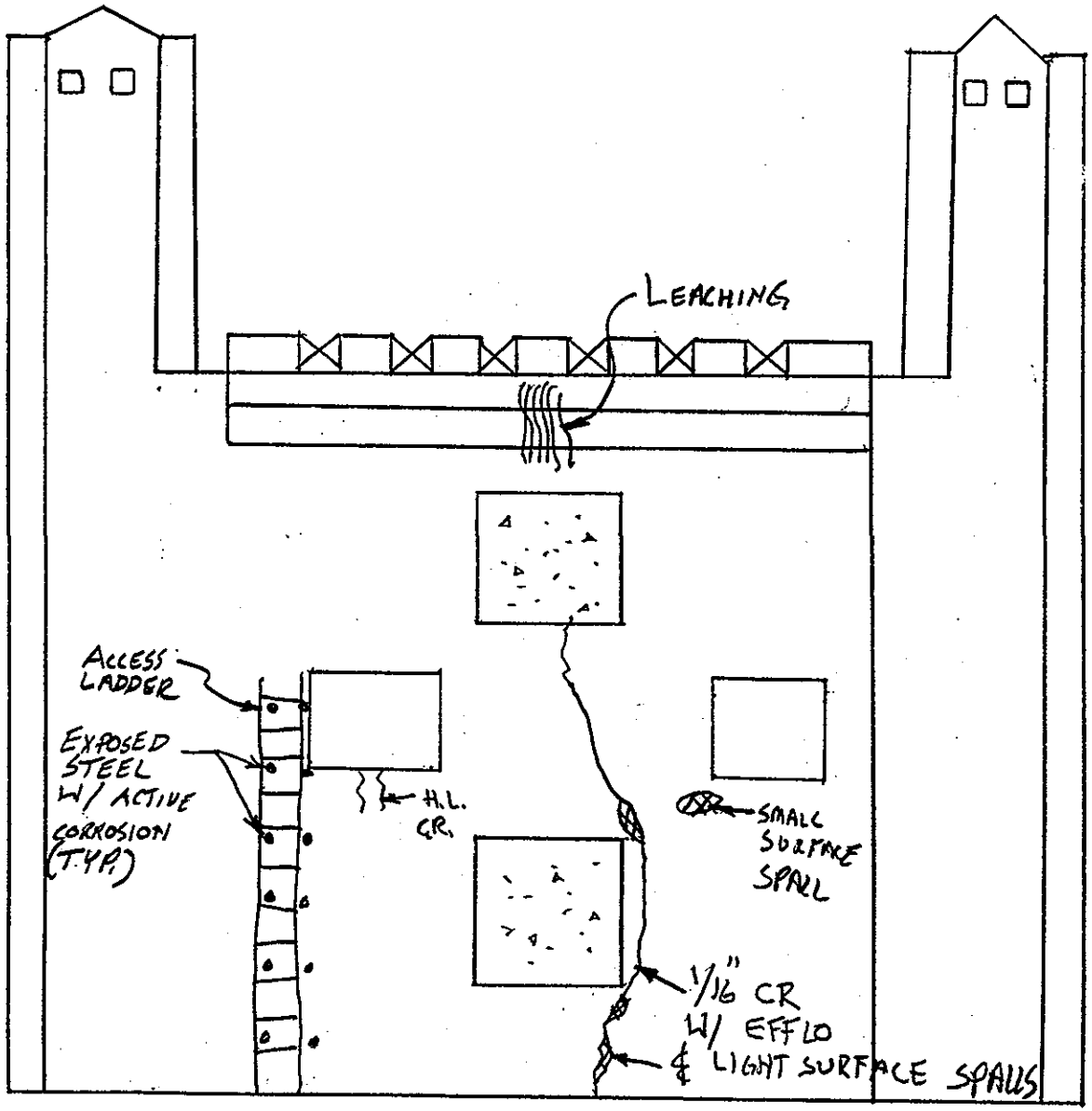

SOUTH ABUTMENT - CHAMBER 3
S. ELEV. NORTH WALL

SUBSTRUCTURE

DEPARTMENT OF THE ARMY
NEW ENGLAND DISTRICT CORPS OF ENGINEERS

BOURNE HIGHWAY BRIDGE
ROUTINE INSPECTION

NOTES BY: LICHTENSTEIN CONSULTING ENGINEERS

JOB #1986 | DATE: 7/28/98

CREW: [illegible] | SHEET 23 OF 24

(167 227)

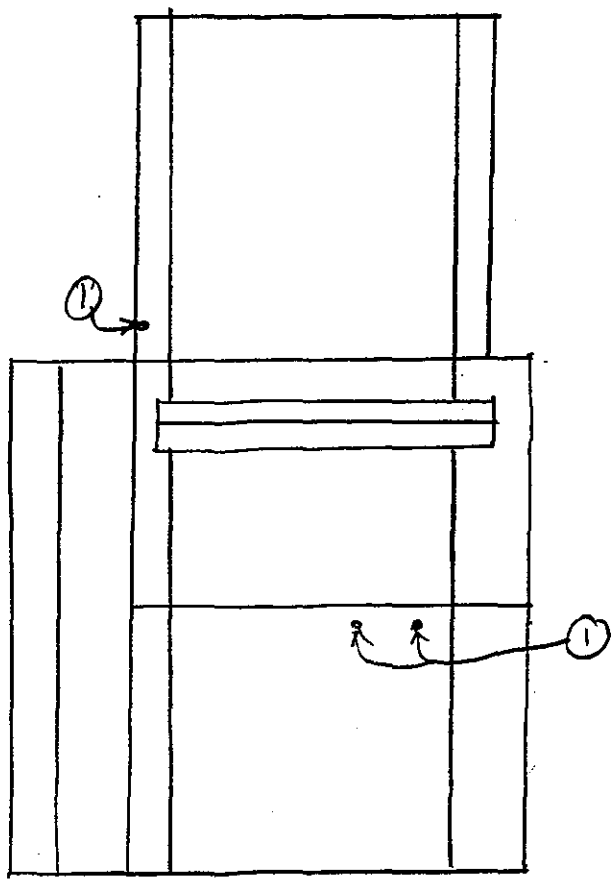

WEST WALL
EAST ELEV.

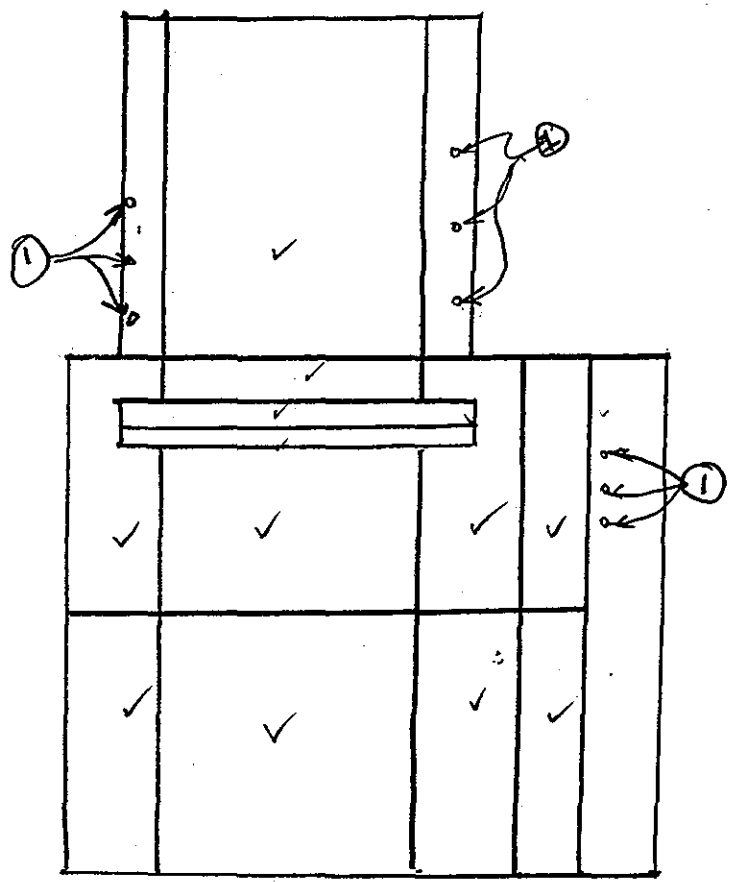

EAST WALL
WEST ELEV.

S ABUTMENT
~~ELEVATION~~

SOUTH ABUTMENT - CHAMBER 3
(NORTH CHAMBER)

NOTES:

1 REBAR PROTRUDING OUT FROM WALL

SUBSTRUCTURE	
DEPARTMENT OF THE ARMY NEW ENGLAND DISTRICT CORPS OF ENGINEERS	
BOURNE HIGHWAY BRIDGE ROUTINE INSPECTION	
NOTES BY: LICHTENSTEIN CONSULTING ENGINEERS	
JOB #1986	DATE: 7/28/98
CREW: FP, PWN	SHEET 21 OF 24

168/227

GEN NOTE: MOD TO HVY SCALING ON ALL SURFACES

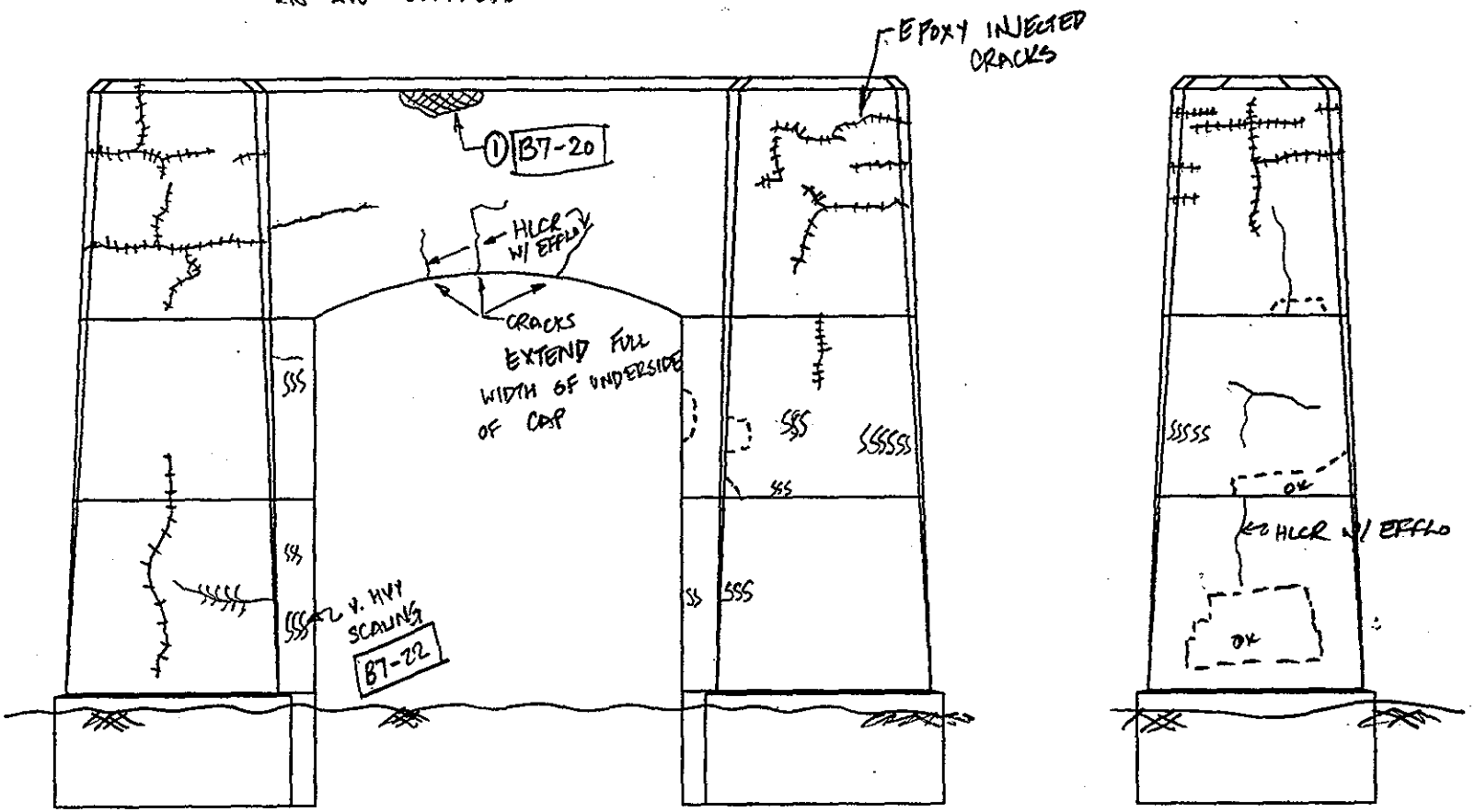

S ELEVATION
B7-21

E ELEV.

PIER 5

EL
NOTES: 1 2'W x 10"H SPALL

SUBSTRUCTURE	
DEPARTMENT OF THE ARMY NEW ENGLAND DISTRICT CORPS OF ENGINEERS	
BOURNE HIGHWAY BRIDGE ROUTINE INSPECTION	
NOTES BY: LICHTENSTEIN CONSULTING ENGINEERS	
JOB #1986	DATE: 7/16/98
CREW: FP, PWN	SHEET 9 OF 10

169
227

GEN. NOTE: MED. TO HVY SCALING ON ALL SURFACES.

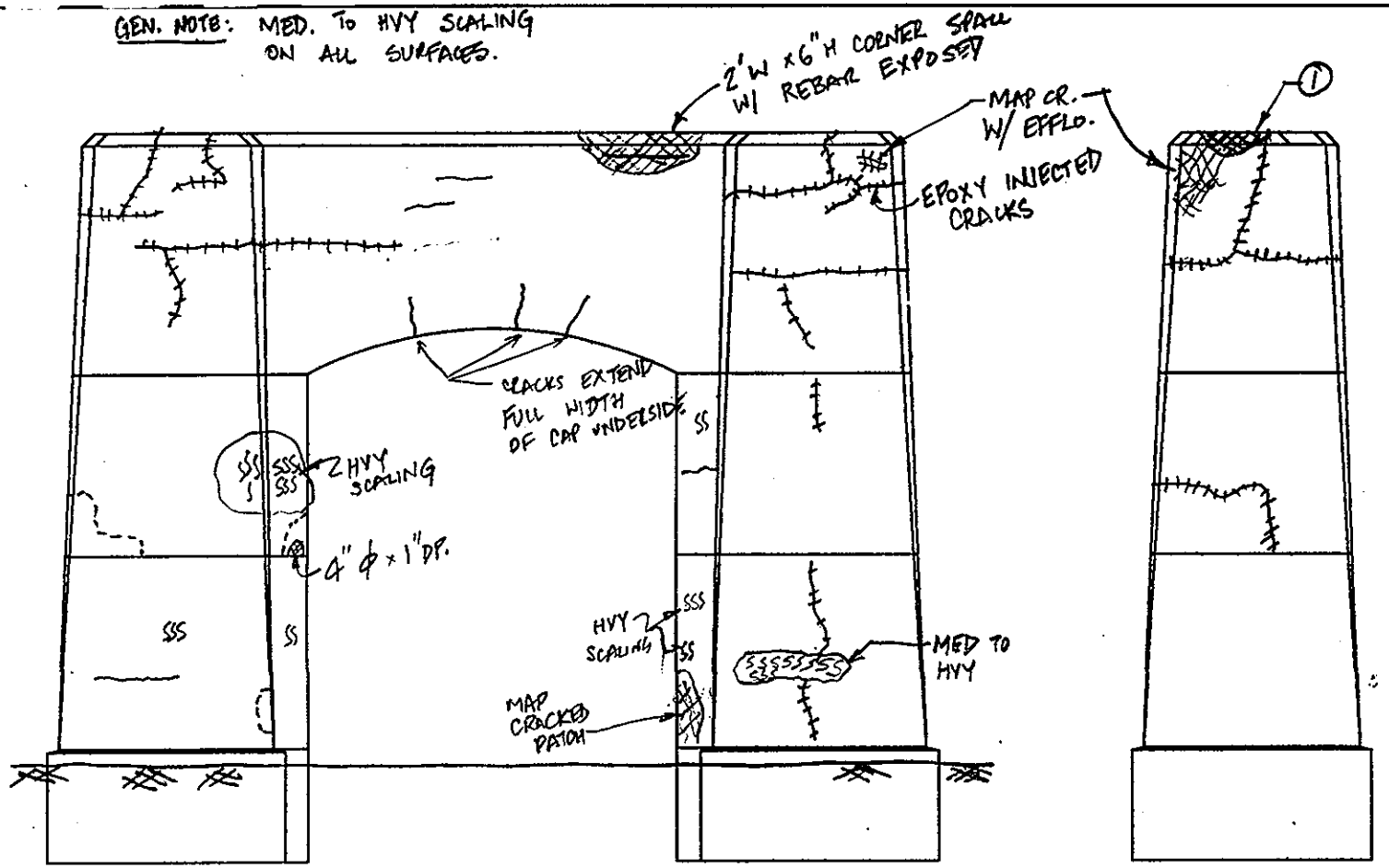

N ELEVATION

B7-19

W ELEV.

PIER 5

EL

NOTES: ① 4'W x 6"H. CORNER SPALL

SUBSTRUCTURE	
DEPARTMENT OF THE ARMY NEW ENGLAND DISTRICT CORPS OF ENGINEERS	
BOURNE HIGHWAY BRIDGE ROUTINE INSPECTION	
NOTES BY: LICHTENSTEIN CONSULTING ENGINEERS	
JOB #1986	DATE: 7/16/98
CREW: FP, PWN	SHEET 8 OF 10

L22 (170)

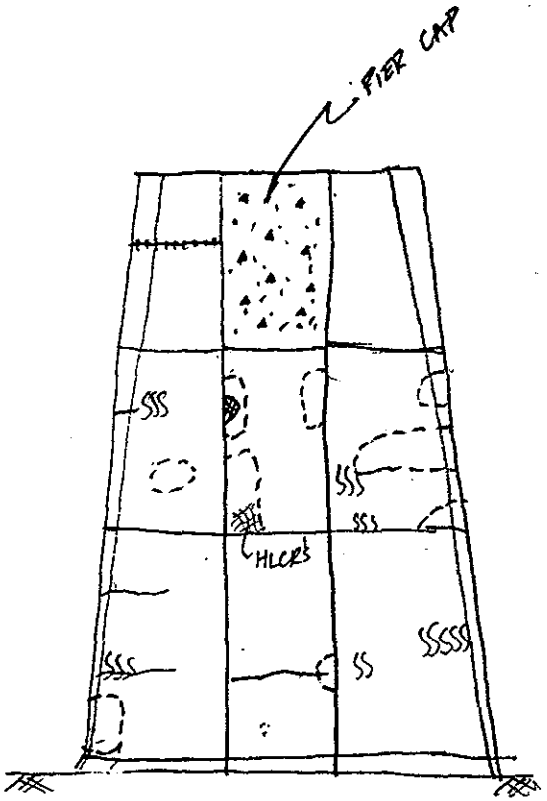

W. FACE OF E. COL.

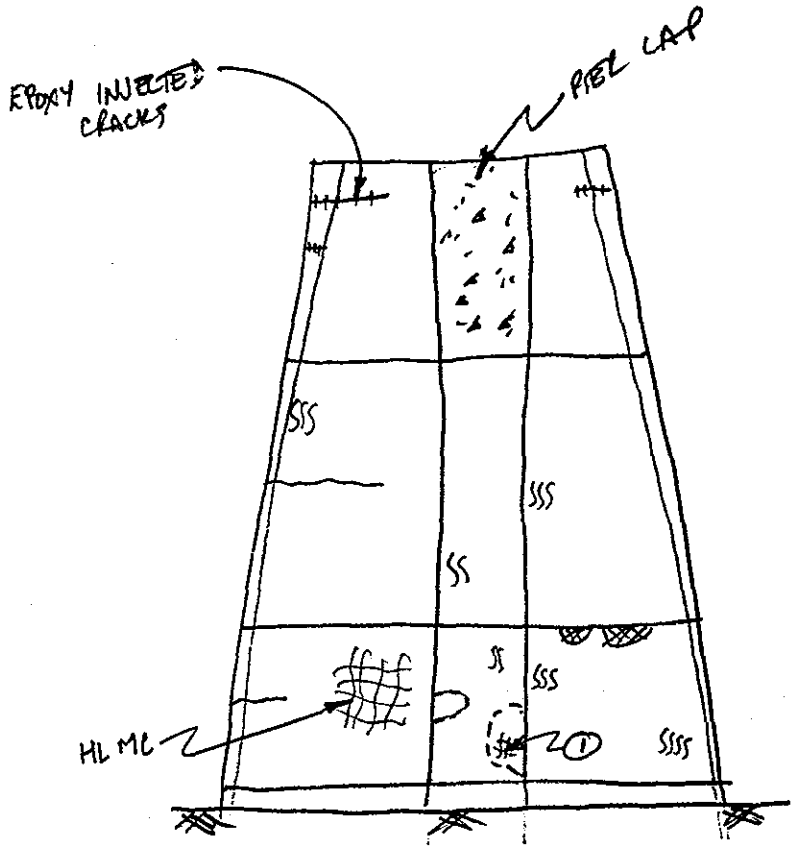

E. FACE OF W. COL.

PIER 5

EL

NOTES: (1) PATCH OK EXCEPT FOR HL CRS W/ RUST STAINING & EFFLO.

SUBSTRUCTURE	
DEPARTMENT OF THE ARMY NEW ENGLAND DISTRICT CORPS OF ENGINEERS	
BOURNE HIGHWAY BRIDGE ROUTINE INSPECTION	
NOTES BY: LICHTENSTEIN CONSULTING ENGINEERS	
JOB #1986	DATE: 7/16/98
CREW: FP, PWN	SHEET 10 OF 10

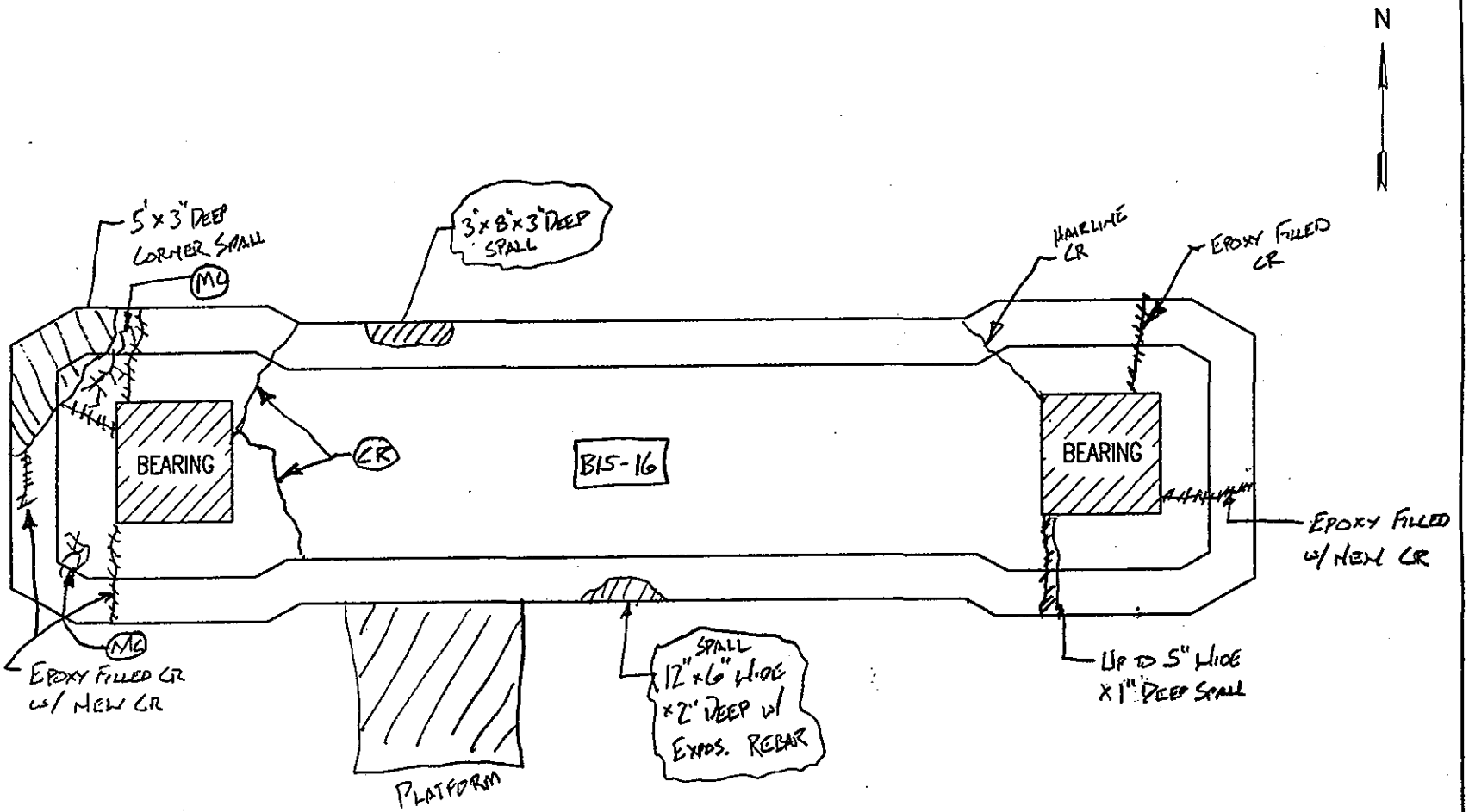

PIER 5

NOTES:

LADDER NOTE*:- CRACKED WELD IN LADDER CONN. TO SWAY BRACING UPPER PORTION OF X W/ HVY. VIBRATION UNDER LL

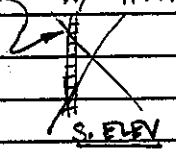

*FP, EL 8/19/98

TOP OF PIER	
DEPARTMENT OF THE ARMY NEW ENGLAND DSTRICT CORPS OF ENGINEERS	
BOURNE HIGHWAY BRIDGE ROUTINE INSPECTION	
NOTES BY: LICHTENSTEIN CONSULTING ENGINEERS	
JOB #1986	DATE: 7/28/98
CREW: SD, W²	SHEET 24 OF 28

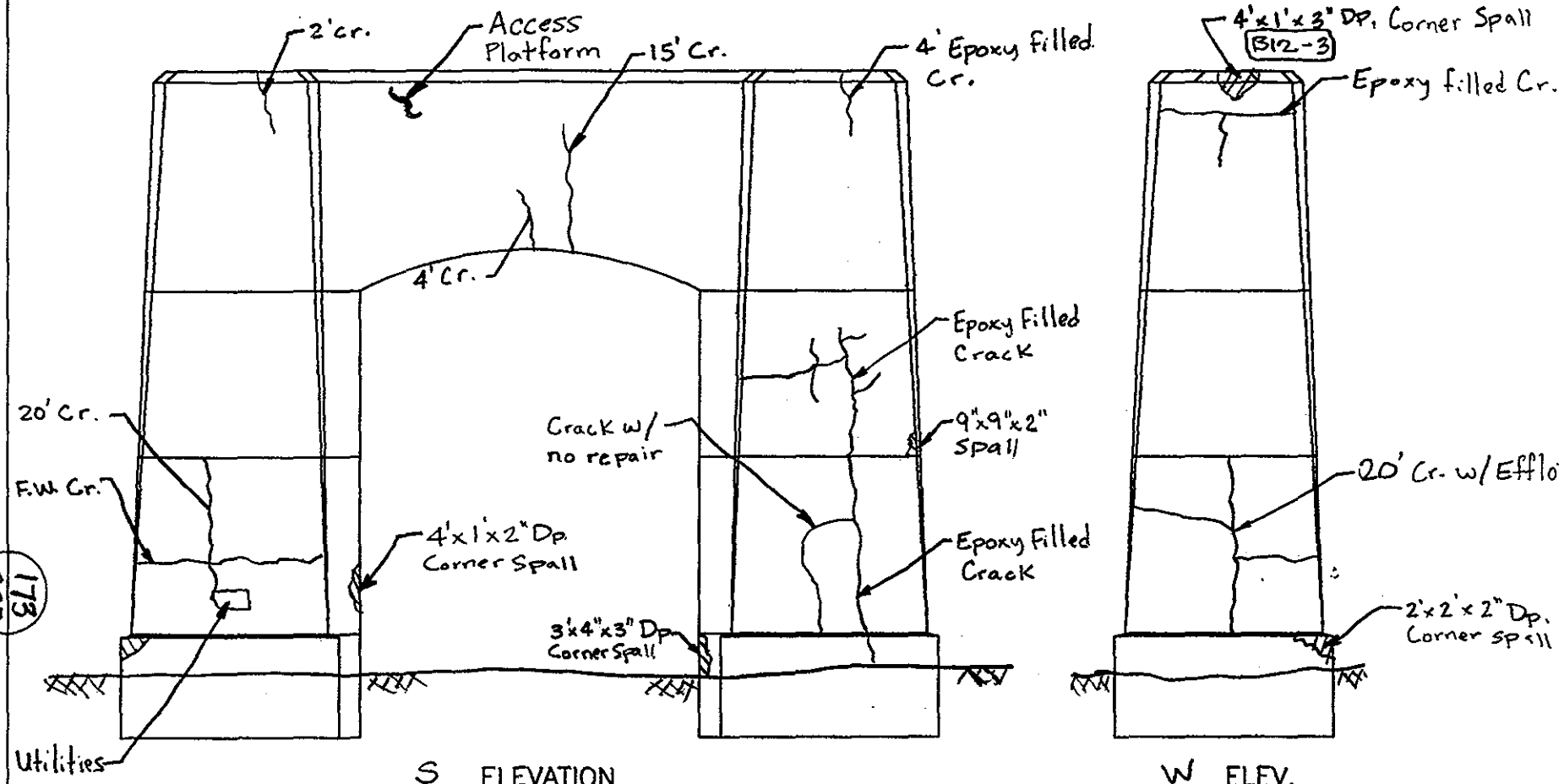

S ELEVATION

B12-2

W ELEV.

PIER 3

EL
NOTES: ① Typ. Light - Med. Scale on all surfaces.

SUBSTRUCTURE	
DEPARTMENT OF THE ARMY NEW ENGLAND DISTRICT CORPS OF ENGINEERS	
BOURNE HIGHWAY BRIDGE ROUTINE INSPECTION	
NOTES BY: LICHTENSTEIN CONSULTING ENGINEERS	
JOB #1986	DATE: 7/16/98
CREW: SD, WW	SHEET 8 OF 8

173
227

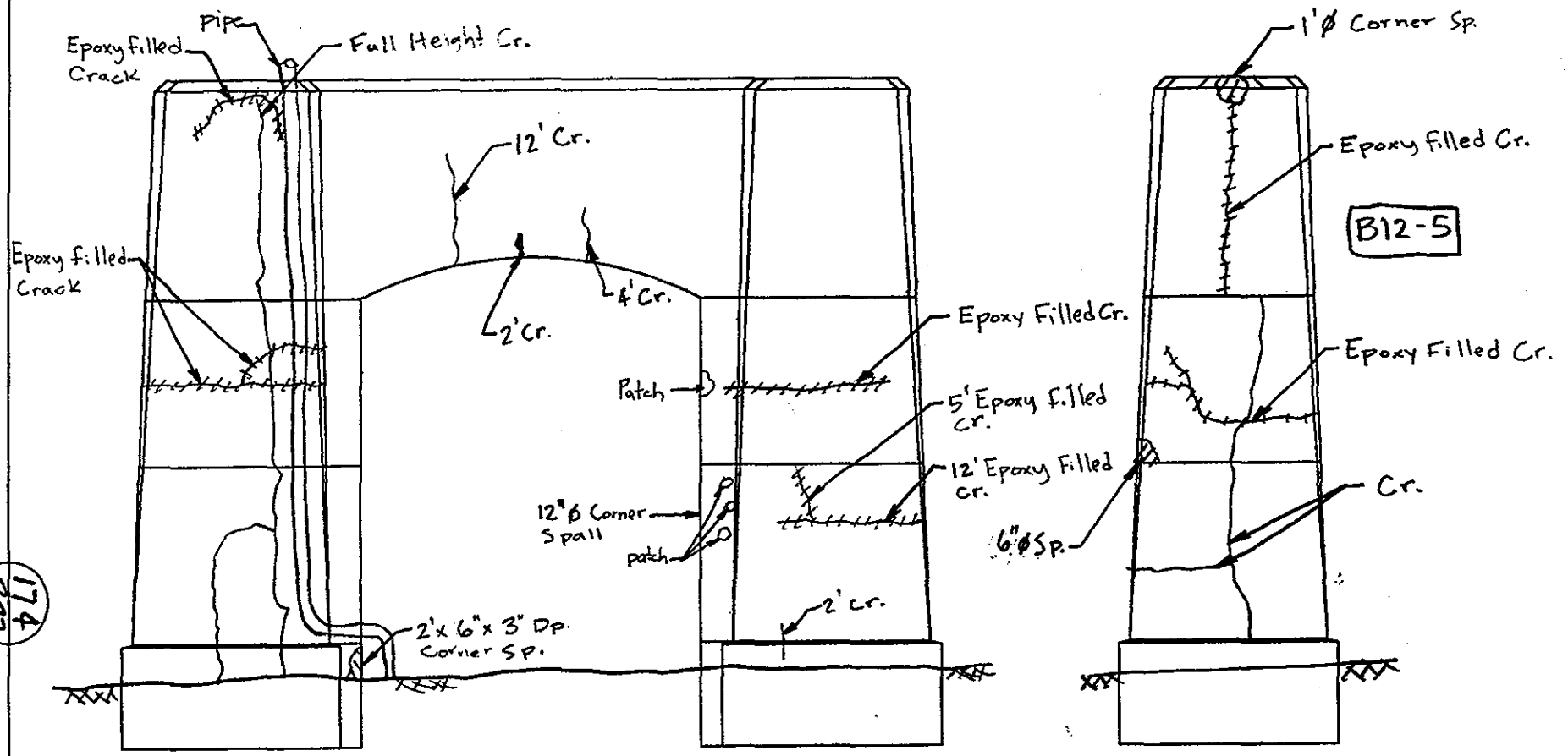

N ELEVATION

B12-4

E ELEV.

PIER 3

EL

NOTES:

SUBSTRUCTURE	
DEPARTMENT OF THE ARMY NEW ENGLAND DISTRICT CORPS OF ENGINEERS	
BOURNE HIGHWAY BRIDGE ROUTINE INSPECTION	
NOTES BY: LICHTENSTEIN CONSULTING ENGINEERS	
JOB #1986	DATE: 7/16/98
CREW: SD, WW	SHEET 7 OF 8

174
227

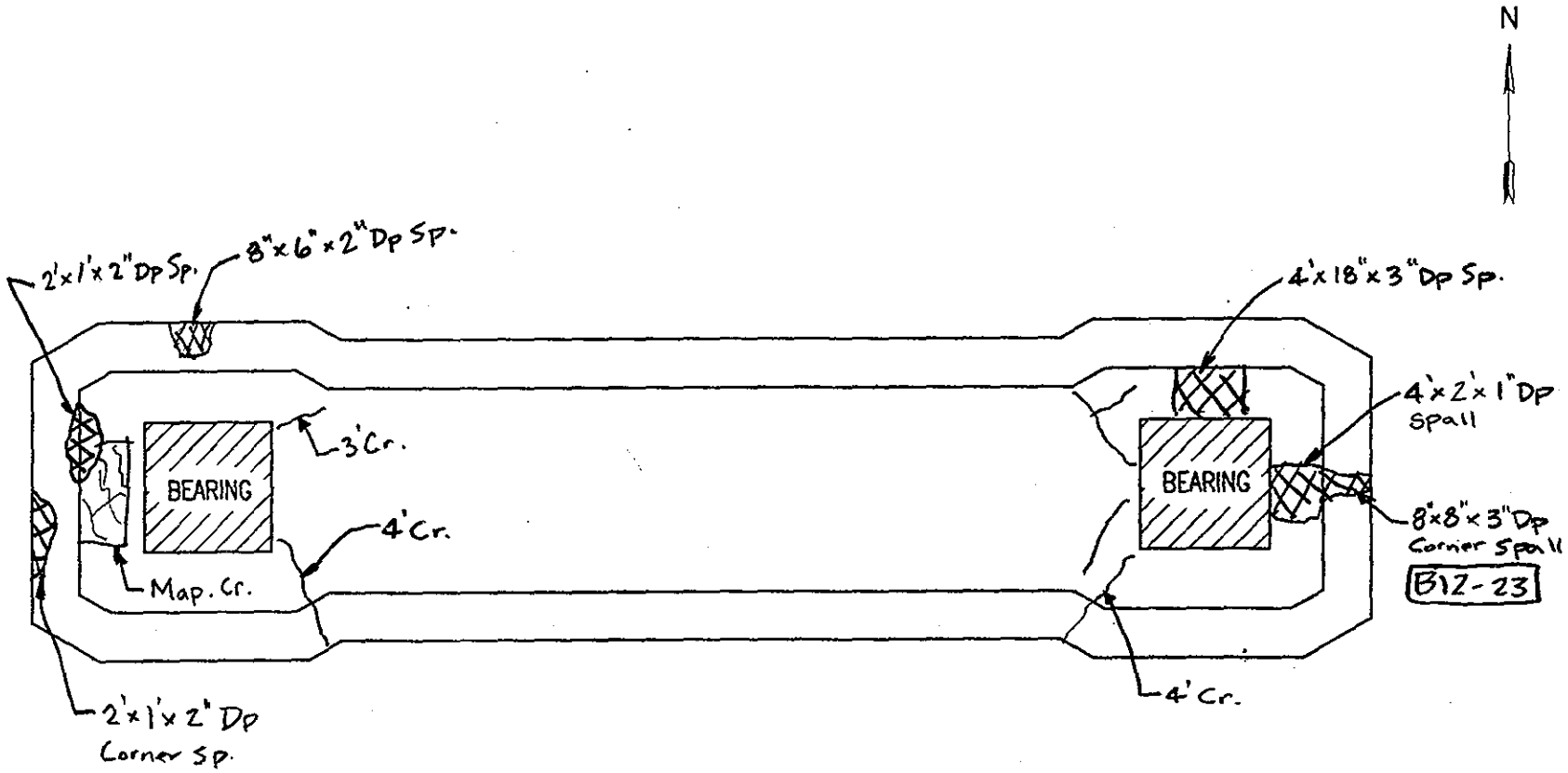

PIER 3

NOTES:

TOP OF PIER	
DEPARTMENT OF THE ARMY NEW ENGLAND DSTRICT CORPS OF ENGINEERS	
BOURNE HIGHWAY BRIDGE ROUTINE INSPECTION	
NOTES BY: LICHTENSTEIN CONSULTING ENGINEERS	
JOB #1986	DATE: 7/23/98
CREW: WP, SD, PWM	SHEET 9 OF 11

175
227

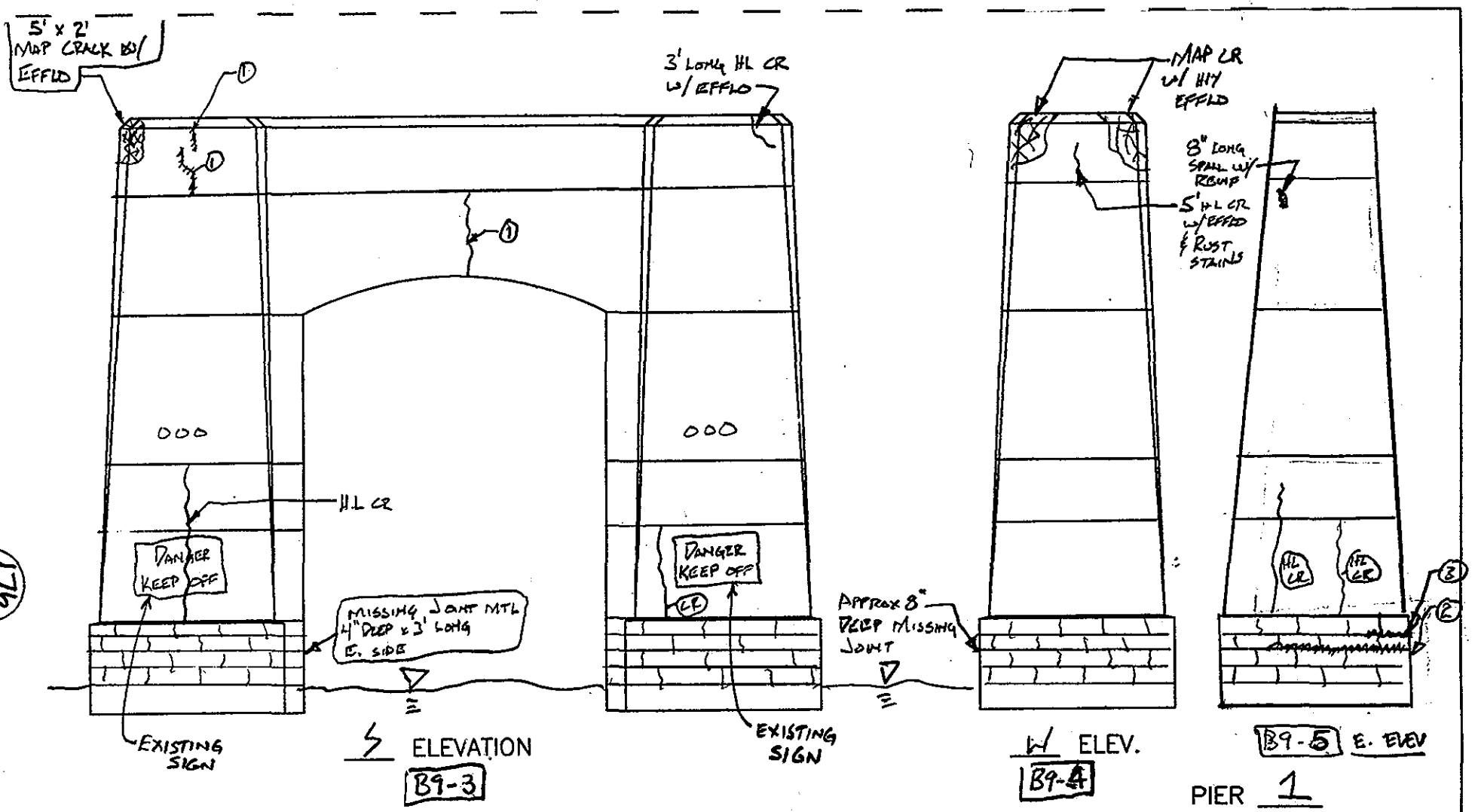

NOTES:

1. EPOXY FILLED CRACK
2. MISSING MORTAR JOINT 24" DEEP APPROX
3. " " " 8" DEEP APPROX

SUBSTRUCTURE

DEPARTMENT OF THE ARMY
NEW ENGLAND DISTRICT CORPS OF ENGINEERS

BOURNE HIGHWAY BRIDGE
ROUTINE INSPECTION

NOTES BY: LICHTENSTEIN CONSULTING ENGINEERS

JOB #1986	DATE: 7/23/98
CREW: W², SD, PWN	SHEET 11 OF 11

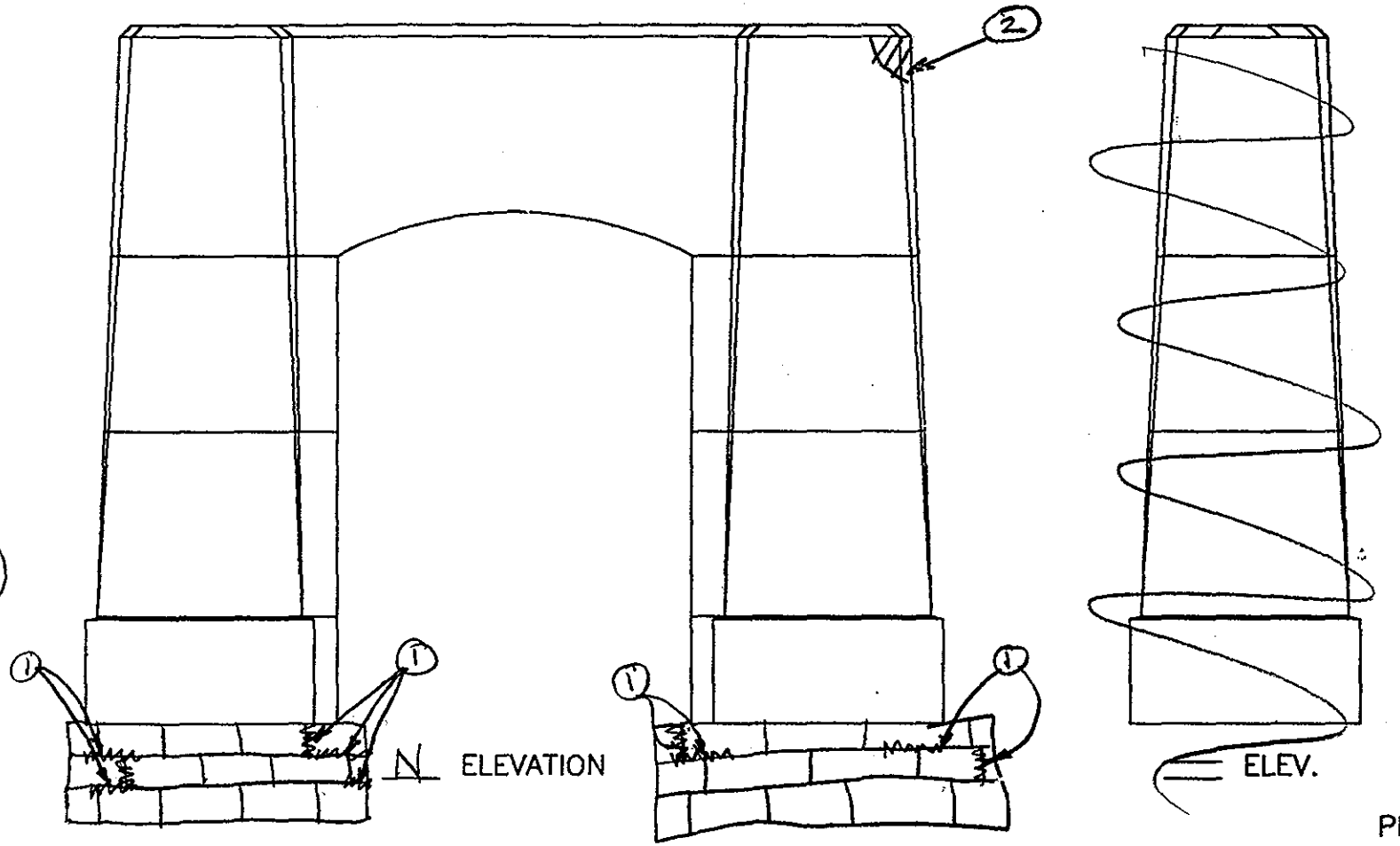

PIER 1

NOTES:

1. POINTING ERODED — MORTAR MISSING
2. HOLLOW MAP CRACKED PATCH

SUBSTRUCTURE

DEPARTMENT OF THE ARMY
NEW ENGLAND DISTRICT CORPS OF ENGINEERS

BOURNE HIGHWAY BRIDGE
ROUTINE INSPECTION

NOTES BY: LICHTENSTEIN
CONSULTING ENGINEERS

JOB #1986	DATE: 7/27/98
CREW: POWH WH SD FP	SHEET 5 OF 14

177
227

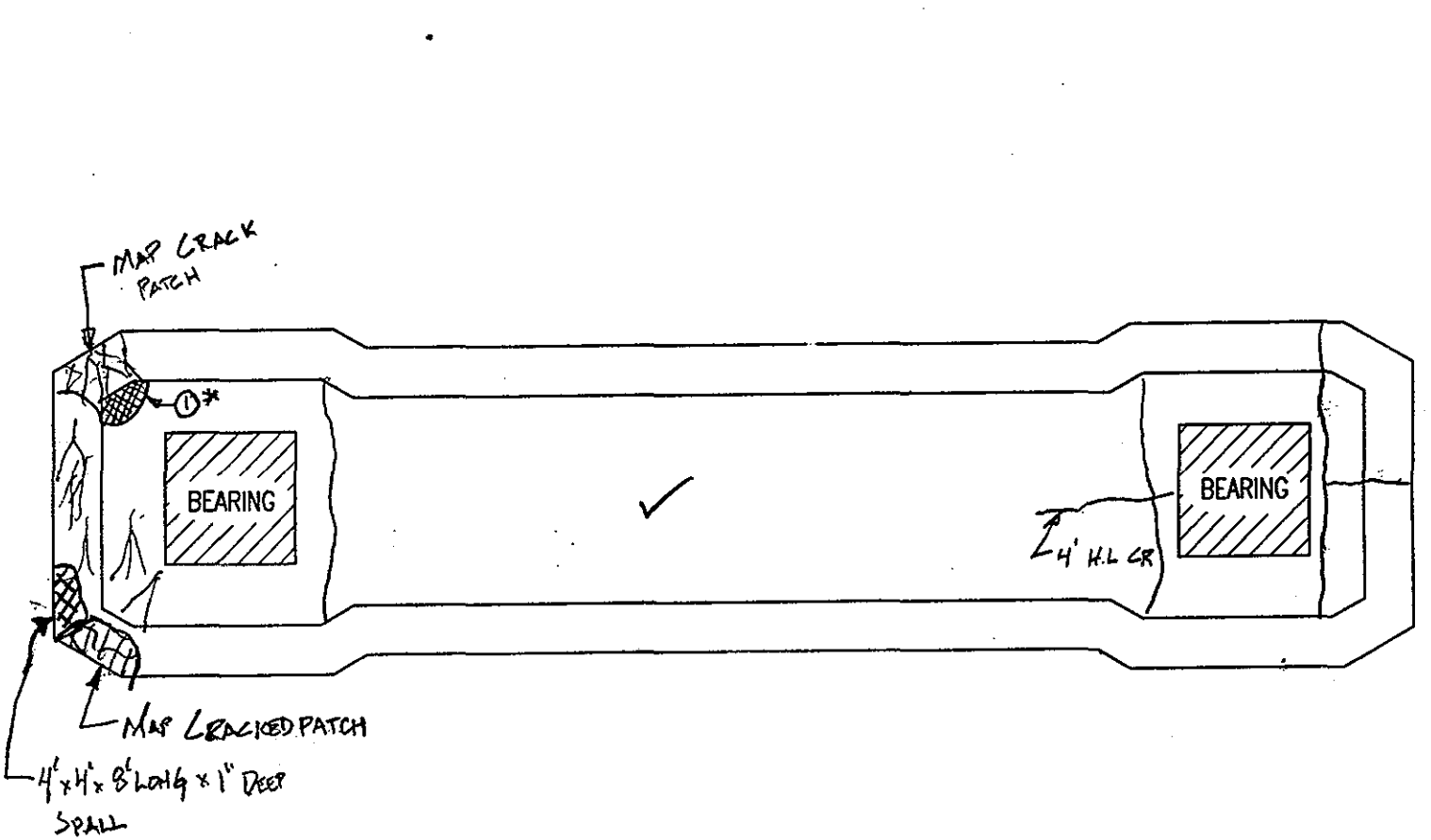

PIER 1

NOTES: ①* SPALL 1'x1' x 1½" DEEP, IN PATCH

PIER 1 LADDER NOTES*:

- RUNGS HAVE ADVANCED SECTION LOSS IN ISOLATED AREAS W/ UPTO 50% OF DIA.
- TYPICALLY, CHANNEL SPLICES HAVE HVY RUST W/ ADVANCED SECN. LOSS (CONN. TYPES ARE SIMILIAR TO PIER 2 LADDER)
- UPTO 100% LOSS ON [FLANGES (4 LOC.) (UPTO 1/8" LOSS ON [webs

* FP, EL 8/19/98

TOP OF PIER	
DEPARTMENT OF THE ARMY NEW ENGLAND DSTRICT CORPS OF ENGINEERS	
BOURNE HIGHWAY BRIDGE ROUTINE INSPECTION	
NOTES BY: LICHTENSTEIN CONSULTING ENGINEERS	
JOB #1986	DATE: 7/23/98
CREW: W, PHN, SD	SHEET 10 OF 11

178
227

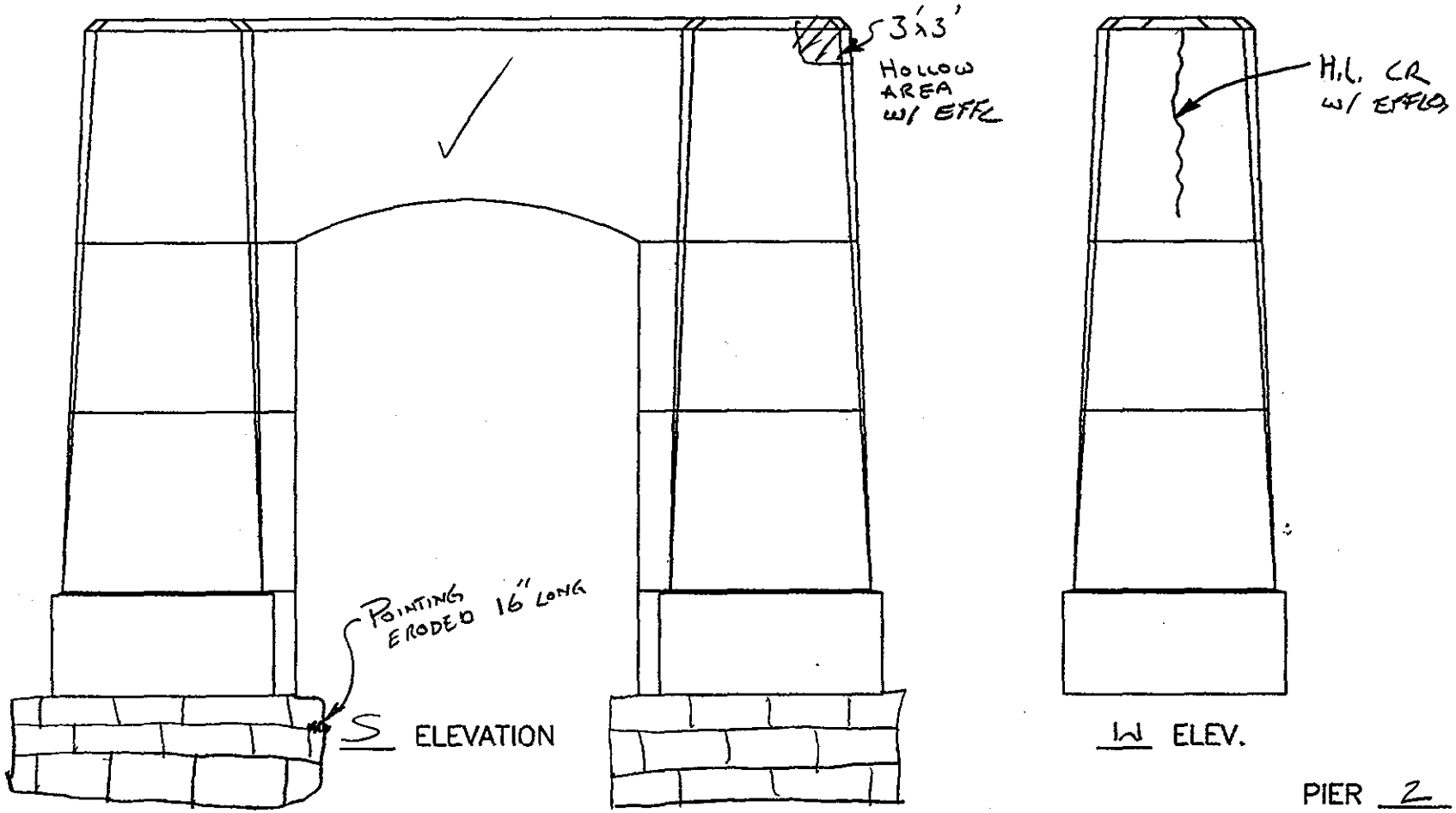

PIER 2

NOTES:

SUBSTRUCTURE

DEPARTMENT OF THE ARMY
NEW ENGLAND DISTRICT CORPS OF ENGINEERS

BOURNE HIGHWAY BRIDGE
ROUTINE INSPECTION

NOTES BY: LICHTENSTEIN
CONSULTING ENGINEERS

JOB #1986	DATE: 7/27/98
CREW: PWN SD WW FP	SHEET 4 OF 14

179
227

B7-2 N. ELEV.

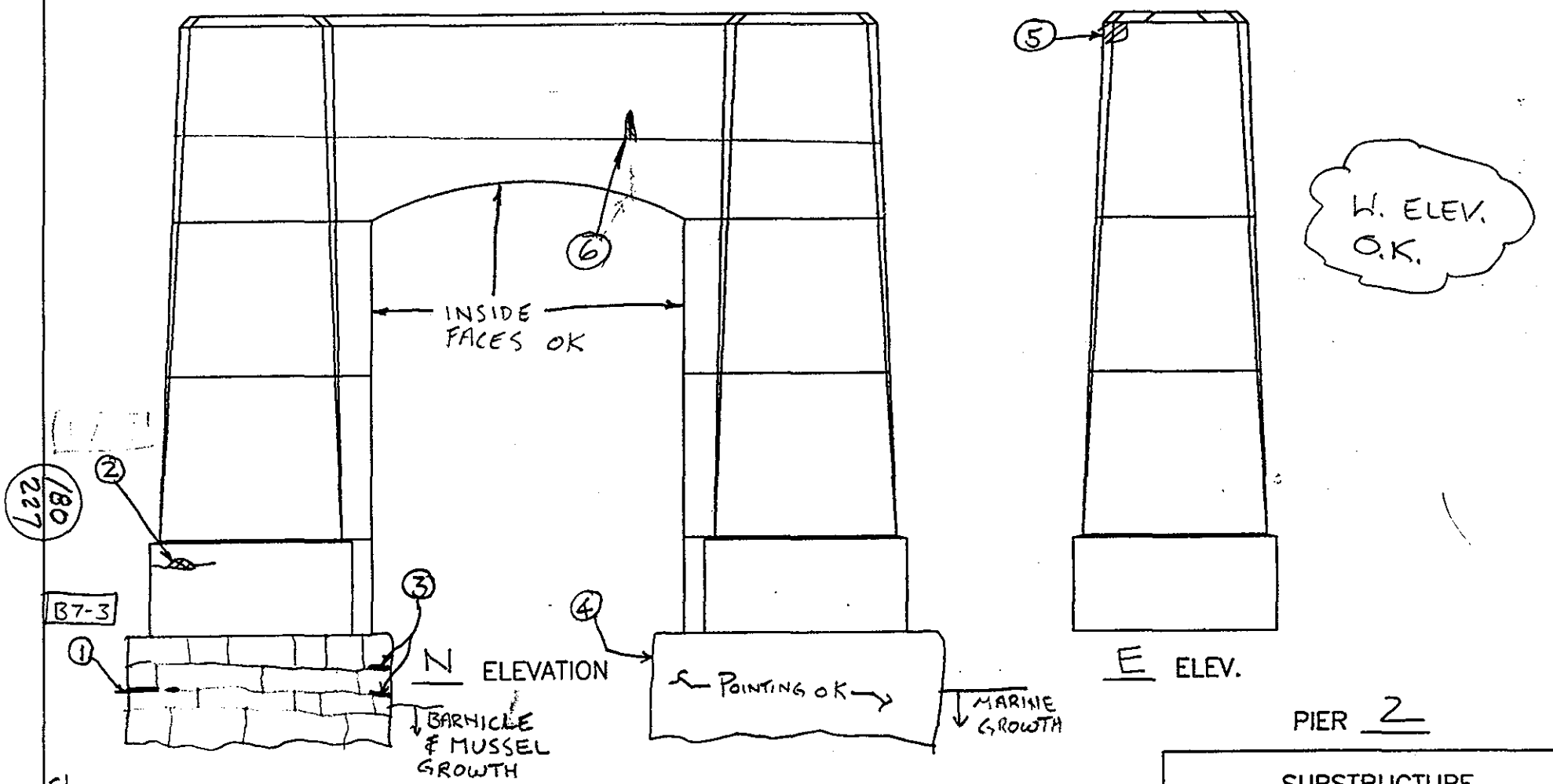

PIER 2

EL

NOTES:

1. POINTING ERODED 3' LONG x 8" DEEP
2. 8" x 1½" x 2" DEEP SPALL w/ 1' LONG HL. CR EACH SIDE
3. POINTING ERODED 3" DEEP x 2' LONG & 10½" DEEP x 6" LONG (LOWER)
4. SE CORNER, POINTING ERODED 4" DEEP x 2' LONG
5. 1' x 1' DELAMINATED PATCH W/ MAP CRACKING
6. 1' H x 4" W x 3/4" DEEP SPALL W/ EXP. REINF.

SUBSTRUCTURE	
DEPARTMENT OF THE ARMY NEW ENGLAND DISTRICT CORPS OF ENGINEERS	
BOURNE HIGHWAY BRIDGE ROUTINE INSPECTION	
NOTES BY: LICHTENSTEIN CONSULTING ENGINEERS	
JOB #1986	DATE: 7/16/98
CREW: PWN, FP	SHEET 1 OF 10

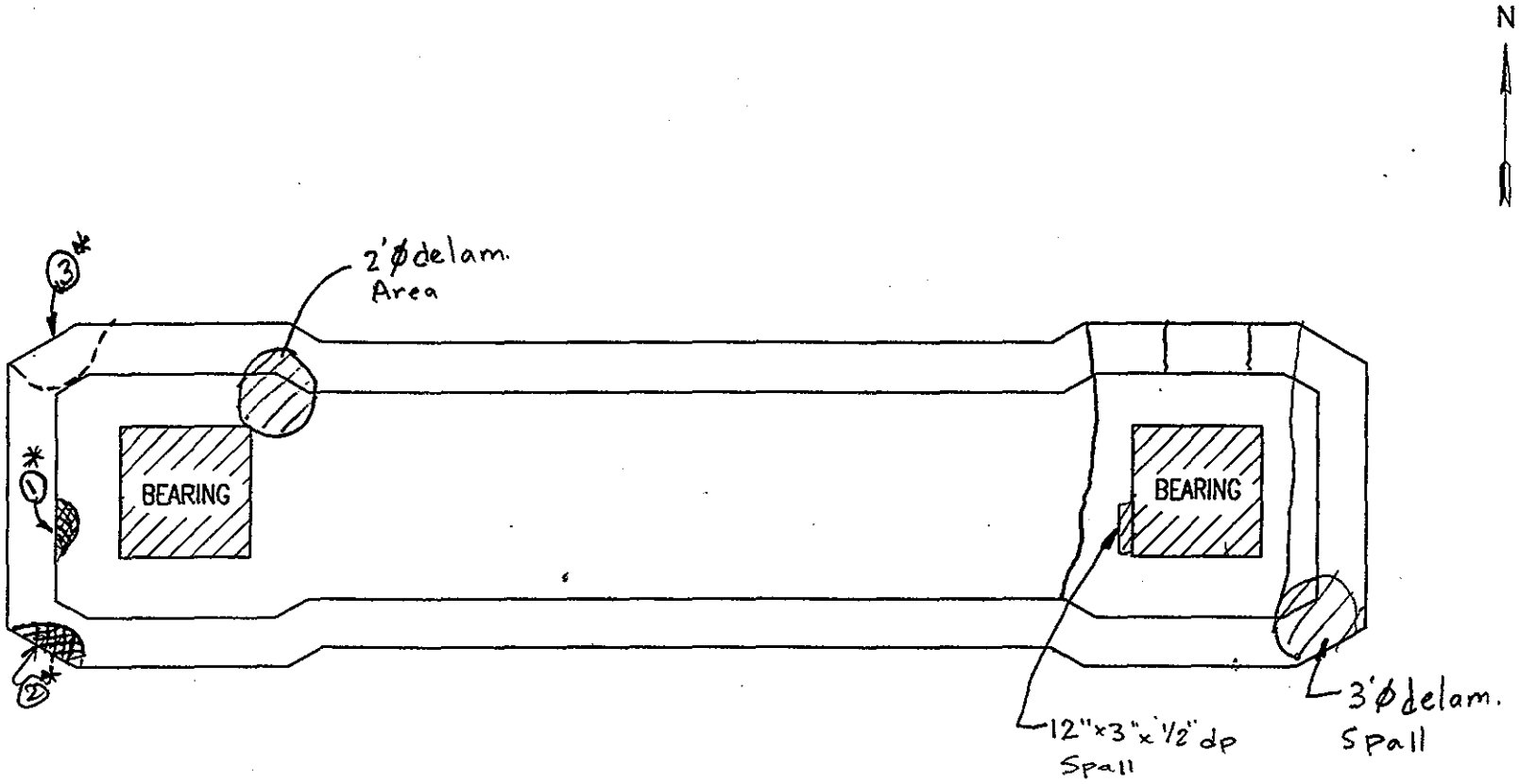

PIER 2

EL

NOTES:

ACCESS LADDER: 3/8" DEEP PITTING IN RUNGS @ SEVERAL LOCATIONS (B2-18,19)
ORIG RUNG ø = 3/8". BOLTS (2) WHICH CONNECT LADDER TO
CATWALK ARE LOOSE W/ ABRASION DUST
* CORROSION & HVY RUST. @ LADDER CHANNEL SPLICES (TYP.)
* SPLICES ARE BOLTED & WELDED ON LADDER; ONLY WELDED @ CONN. FROM LADDER TO & BRACING

(1)* 12" x 4" x 1/4" DP SPALL
(2)* 20" x 2" x 1/2" DEEP SPALL
(3)* 2' x 2' HOLLOW PATCH

* FP, EL 8/19/98

TOP OF PIER	
DEPARTMENT OF THE ARMY NEW ENGLAND DISTRICT CORPS OF ENGINEERS	
BOURNE HIGHWAY BRIDGE ROUTINE INSPECTION	
NOTES BY: LICHTENSTEIN CONSULTING ENGINEERS	
JOB #1986	DATE: 7/13/98
CREW: SD, EL	SHEET 7 OF 8

(227/181)

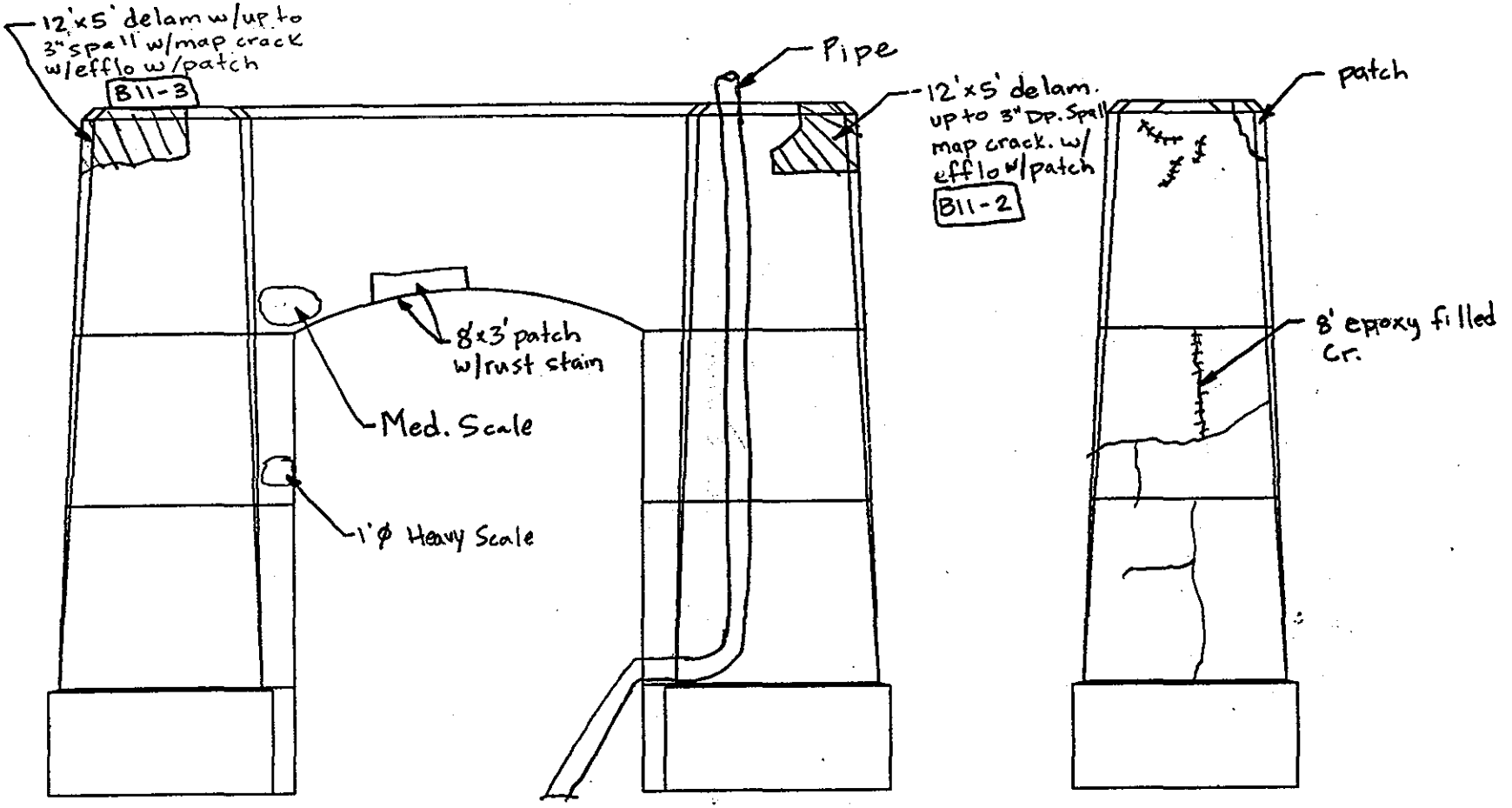

S ELEVATION

W ELEV.

PIER 4

EL

NOTES:

SUBSTRUCTURE	
DEPARTMENT OF THE ARMY NEW ENGLAND DISTRICT CORPS OF ENGINEERS	
BOURNE HIGHWAY BRIDGE ROUTINE INSPECTION	
NOTES BY: LICHTENSTEIN CONSULTING ENGINEERS	
JOB #1986	DATE: 7/16/98
CREW: SD, WW	SHEET 1 OF 8

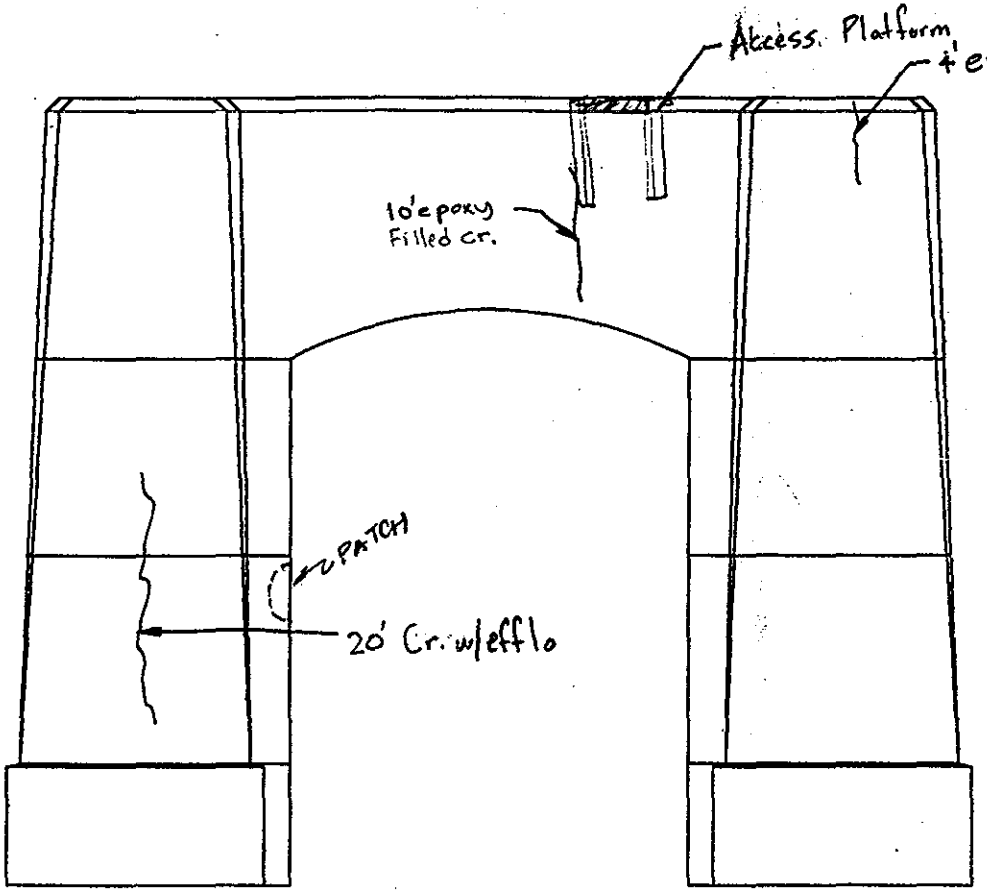

N ELEVATION

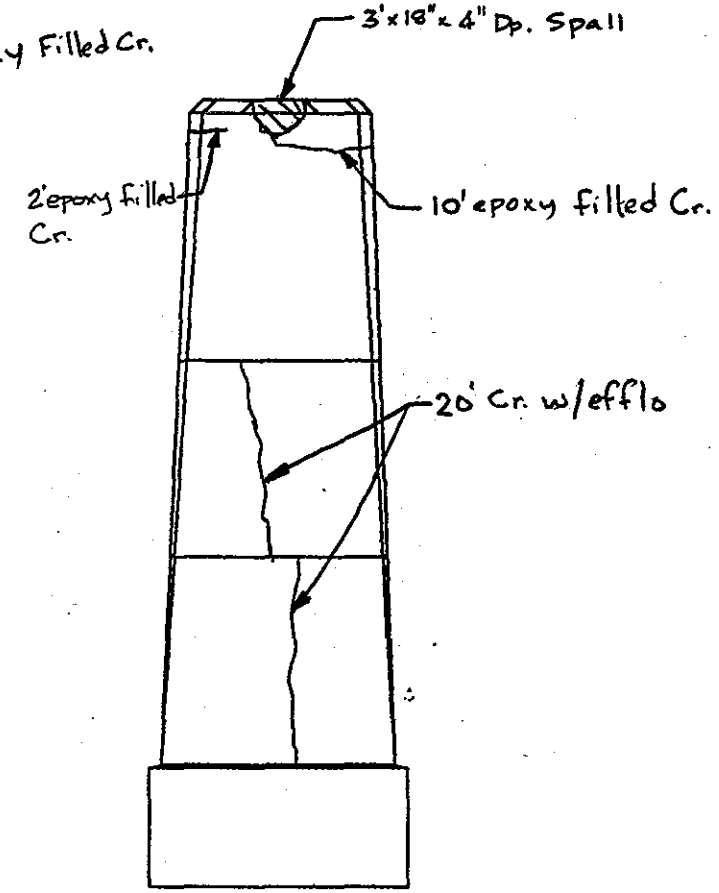

E ELEV.

PIER 4

EL
NOTES:

SUBSTRUCTURE	
DEPARTMENT OF THE ARMY NEW ENGLAND DISTRICT CORPS OF ENGINEERS	
BOURNE HIGHWAY BRIDGE ROUTINE INSPECTION	
NOTES BY: LICHTENSTEIN CONSULTING ENGINEERS	
JOB #1986	DATE: 7/16/98
CREW: SD, WW	SHEET 2 OF 8

183
227

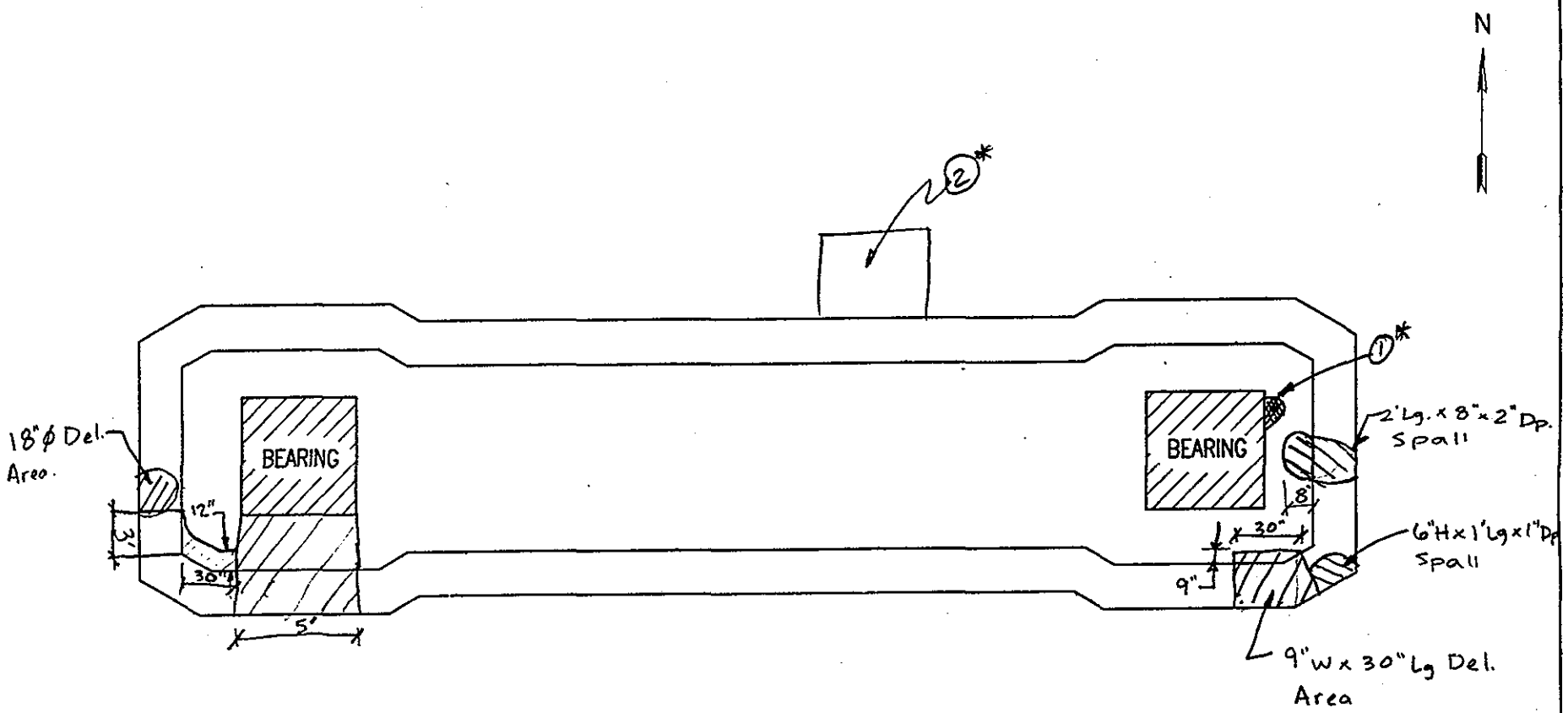

PIER 4

EL
NOTES: 1* 12" x 6" x 1" SPALL
2* ACCESS PLATFORM HAS UPTO 1/8" PITT. x UPTO 1/2 WIDTH OF FLANGE, ALL MEMBERS

*FP, EL 8/18/98

TOP OF PIER	
DEPARTMENT OF THE ARMY NEW ENGLAND DSTRICT CORPS OF ENGINEERS	
BOURNE HIGHWAY BRIDGE ROUTINE INSPECTION	
NOTES BY: LICHTENSTEIN CONSULTING ENGINEERS	
JOB #1986	DATE: 7/13/98
CREW: SD, EL	SHEET 8 OF 8

184
227

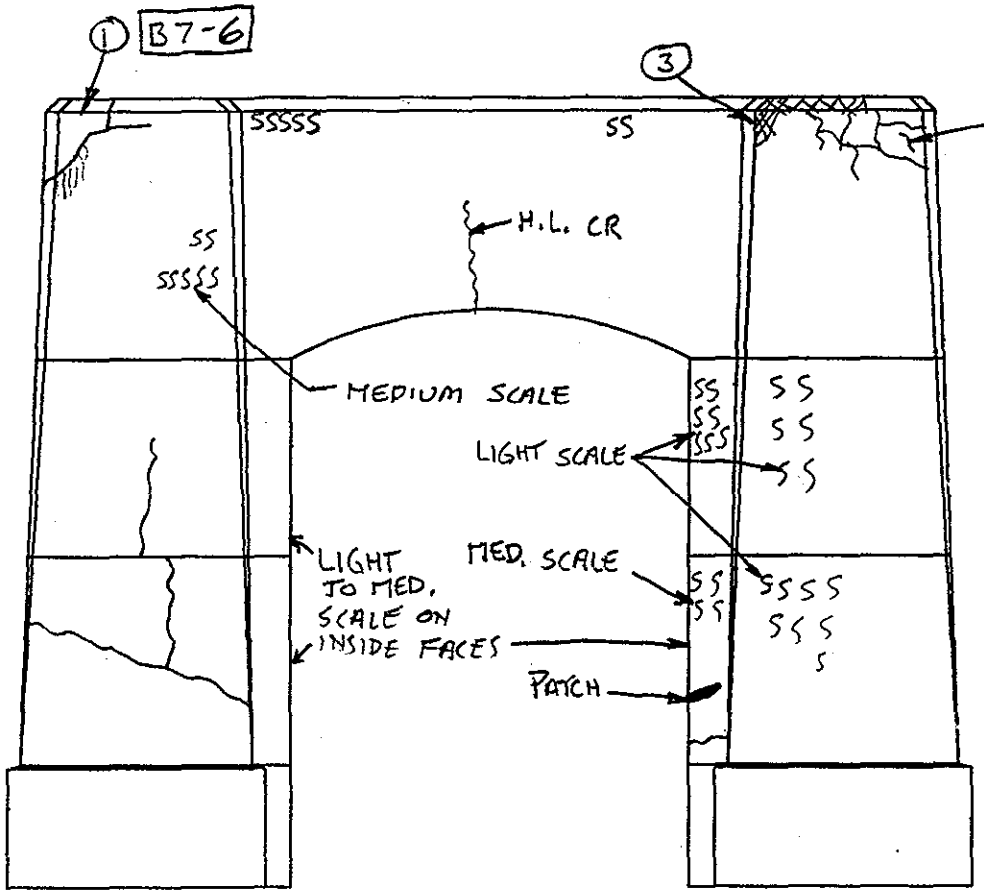

S ELEVATION

B7-9

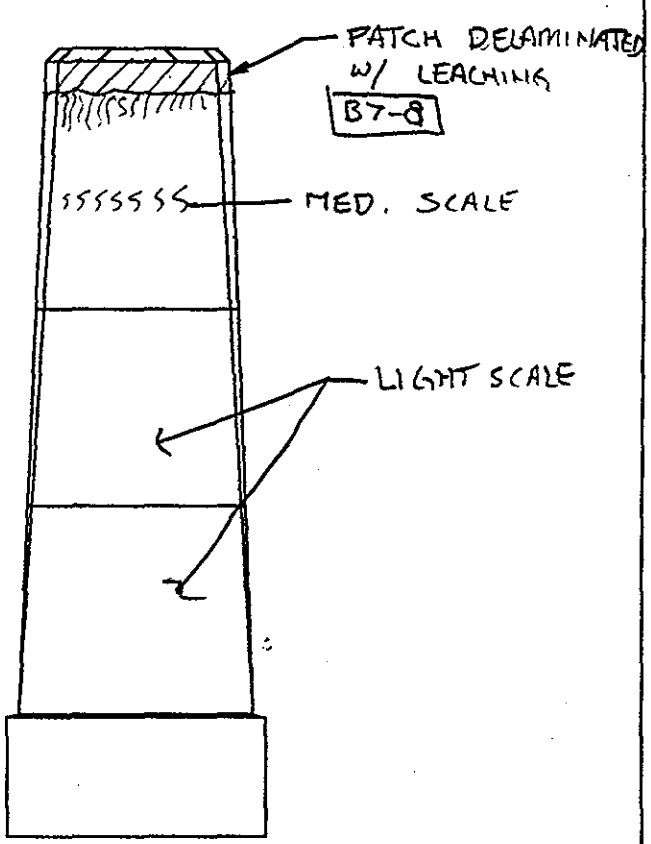

E ELEV.

PIER 6

EL

NOTES:

1. PATCH W/ LEACHING ALONG EDGES
2. H.L. M.C. PATCH W/ LEACHING
3. 4' H x 1' LONG SPALLED OFF PATCH

SUBSTRUCTURE

DEPARTMENT OF THE ARMY
NEW ENGLAND DISTRICT CORPS OF ENGINEERS

BOURNE HIGHWAY BRIDGE
ROUTINE INSPECTION

NOTES BY: LICHTENSTEIN
CONSULTING ENGINEERS

JOB #1986	DATE: 7/16/98
CREW: PWN FP	SHEET 3 OF 10

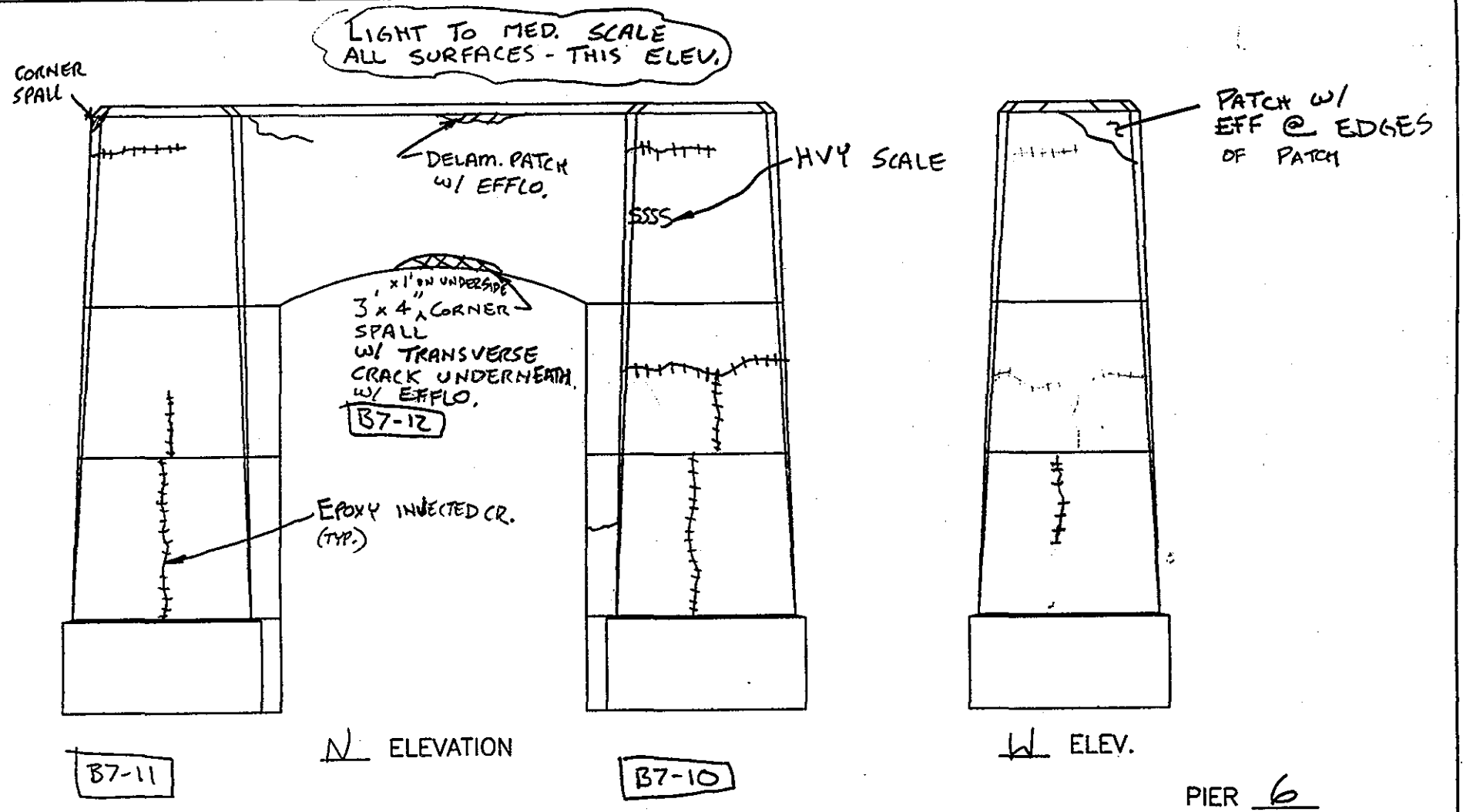

PIER 6

EL
NOTES:

SUBSTRUCTURE	
DEPARTMENT OF THE ARMY NEW ENGLAND DISTRICT CORPS OF ENGINEERS	
BOURNE HIGHWAY BRIDGE ROUTINE INSPECTION	
NOTES BY: LICHTENSTEIN CONSULTING ENGINEERS	
JOB #1986	DATE: 7/16/98
CREW: PWN FP	SHEET 2 OF 10

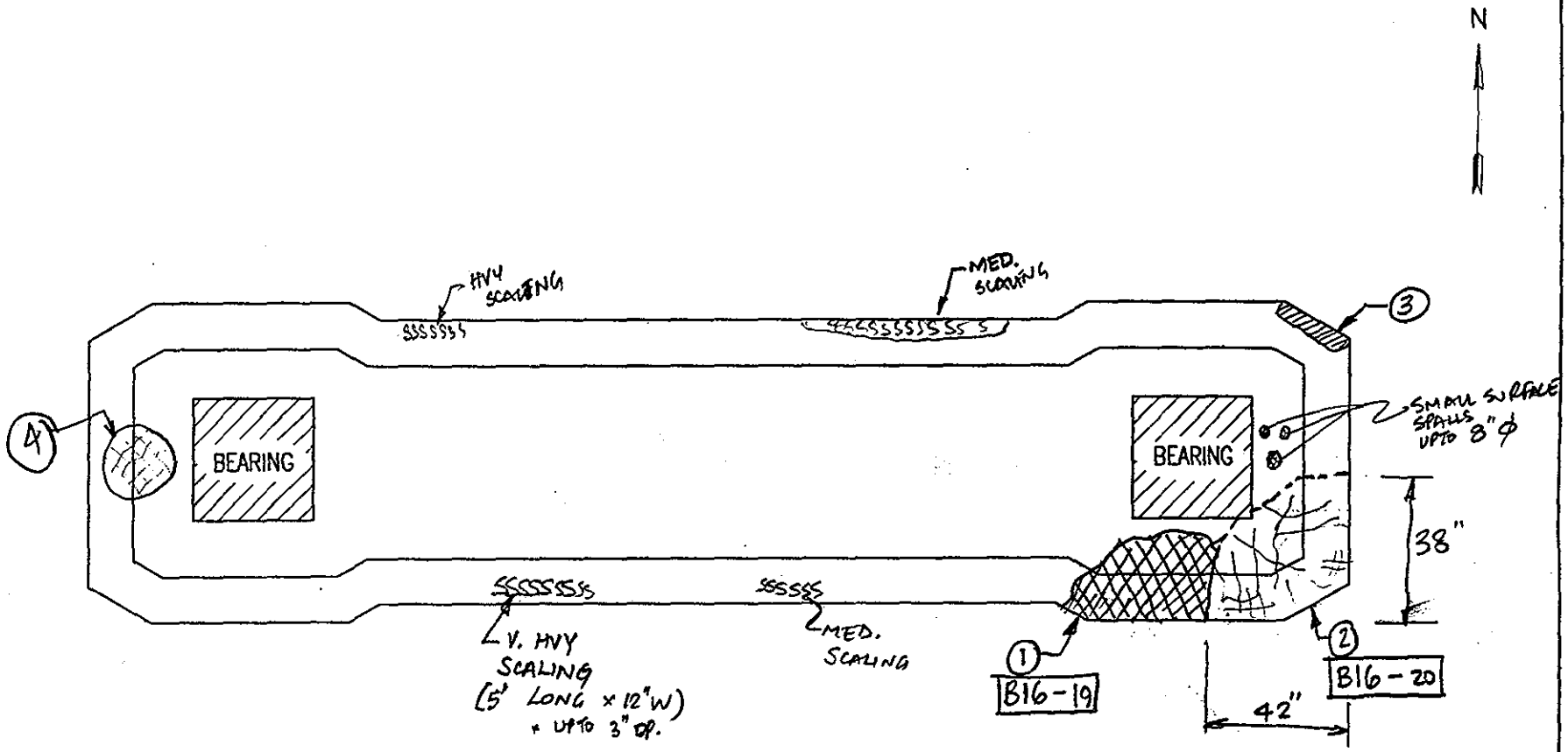

PIER 6

NOTES:

1. 7'-4" LONG x 22" WIDE x UPTO 3" DP. SPALLED PATCH
2. HOLLOW SOUNDING PATCHED AREA W/ MAPCRACKING
3. 8" W x 24" L. HOLLOW AREA
4. 3' ϕ MAP CRACKED AREA (SOUND CONCRETE)

TOP OF PIER	
DEPARTMENT OF THE ARMY NEW ENGLAND DSTRICT CORPS OF ENGINEERS	
BOURNE HIGHWAY BRIDGE ROUTINE INSPECTION	
NOTES BY: LICHTENSTEIN CONSULTING ENGINEERS	
JOB #1986	DATE: 7/28/98
CREW: FP, PWN	SHEET 3 OF 24

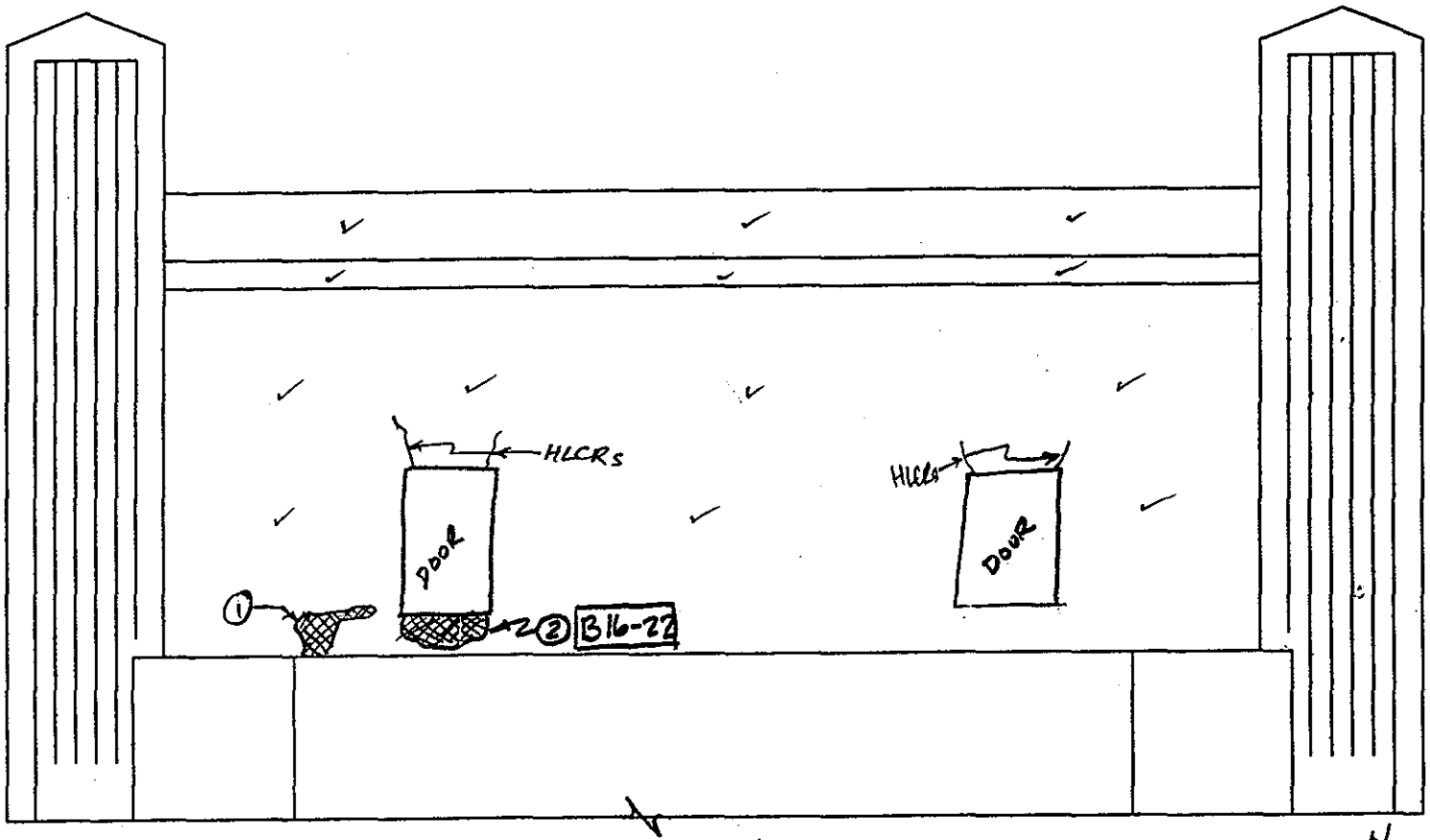

N ABUTMENT
S ELEVATION B16-21

NOTES: (1) UPTO 4' W x 3' H. x UPTO 4" DP. SPALL
(2) 4' W. x 16" H. CORNER SPALL

SUBSTRUCTURE

DEPARTMENT OF THE ARMY
NEW ENGLAND DISTRICT CORPS OF ENGINEERS

BOURNE HIGHWAY BRIDGE
ROUTINE INSPECTION

NOTES BY: LICHTENSTEIN CONSULTING ENGINEERS

JOB #1986 | DATE: 7/28/98
CREW: FP, PWN | SHEET 4 OF 24

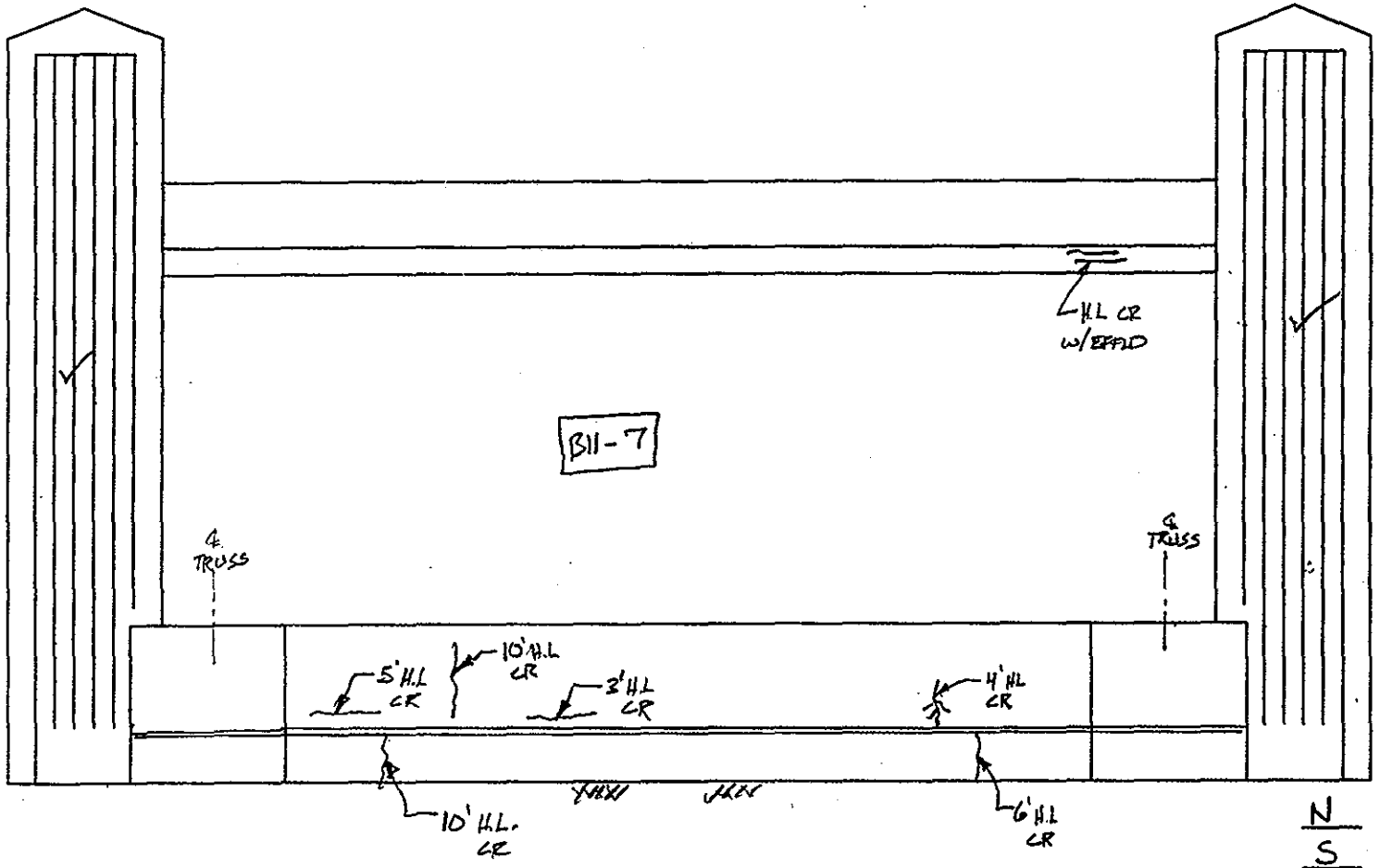

N ABUTMENT
S ELEVATION

EL
NOTES:

SUBSTRUCTURE

DEPARTMENT OF THE ARMY
NEW ENGLAND DISTRICT CORPS OF ENGINEERS

BOURNE HIGHWAY BRIDGE
ROUTINE INSPECTION

NOTES BY: LICHTENSTEIN
CONSULTING ENGINEERS

JOB #1986	DATE: 7/16/98
CREW: SD, WW	SHEET 4 OF 8

189
227

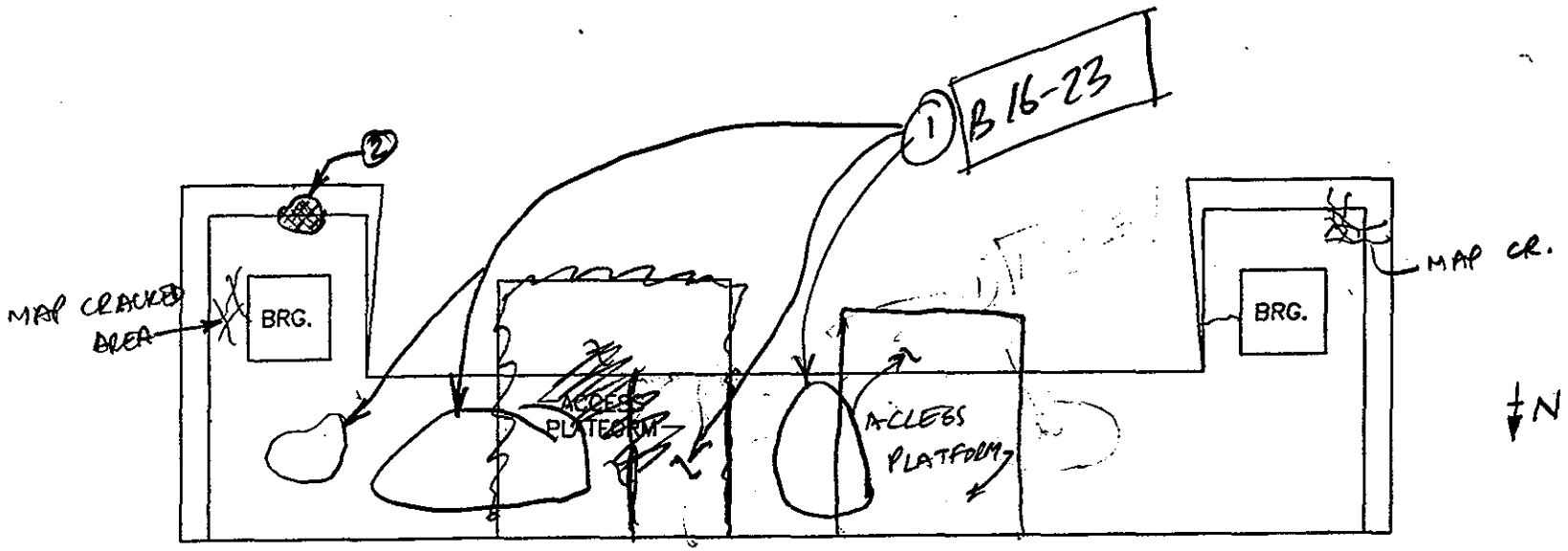

PLAN N ABUTMENT

NOTES: (1) DEBRIS FROM JT ABOVE FALLEN ON TOP OF ABUT. SEAT
(2) 1'W x 1' L. CORNER SPALL

SUBSTRUCTURE

DEPARTMENT OF THE ARMY
NEW ENGLAND DISTRICT CORPS OF ENGINEERS

BOURNE HIGHWAY BRIDGE
ROUTINE INSPECTION

NOTES BY: LICHTENSTEIN CONSULTING ENGINEERS

JOB #1986 | DATE: 7/28/98
CREW: FP, PWN | SHEET 5 OF 24

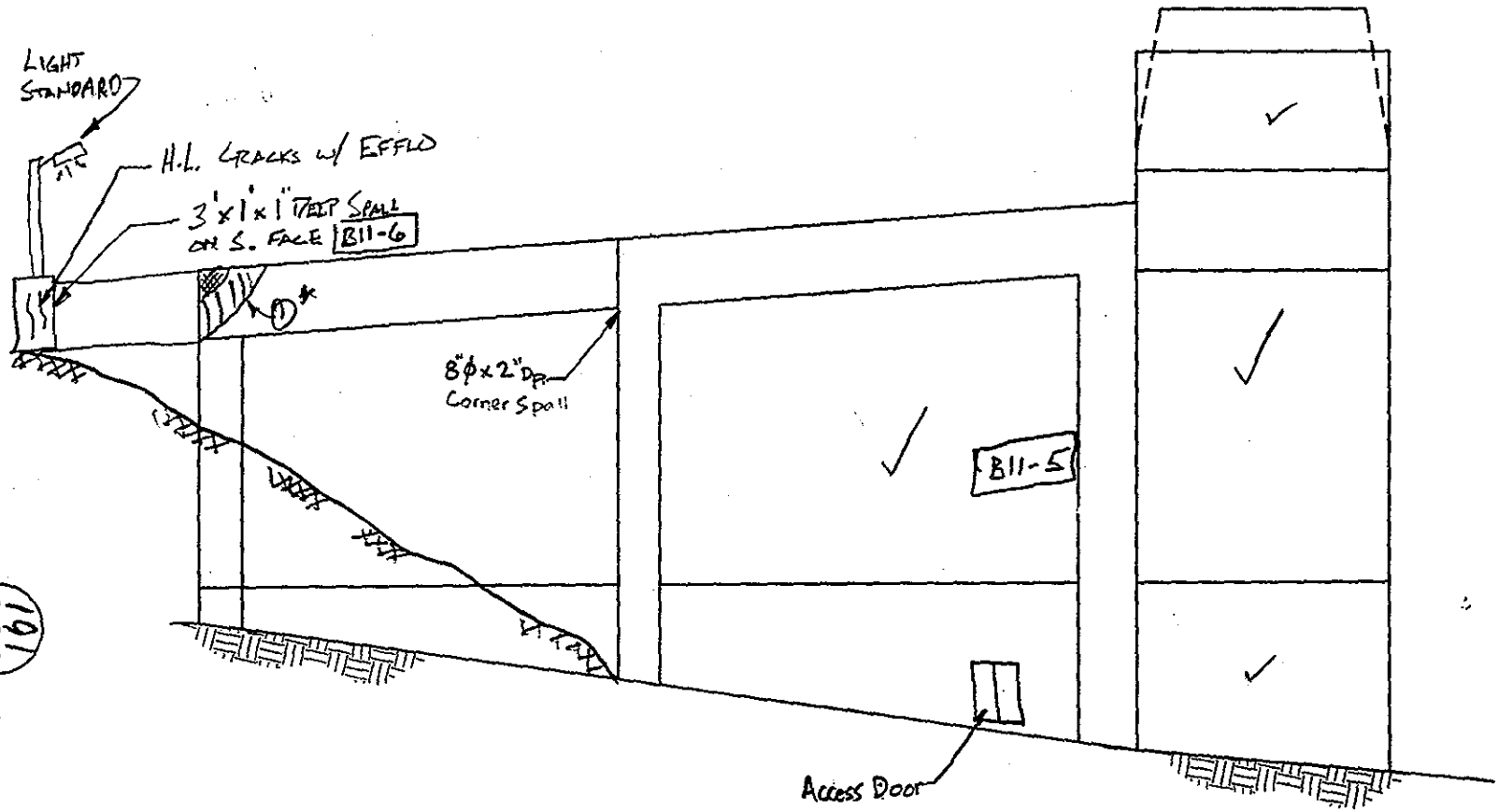

N ABUTMENT
W ELEVATION

EL
NOTES: ①* 6"φ SPALL w/ 80"x18" HOLLOW AREA

SUBSTRUCTURE

DEPARTMENT OF THE ARMY
NEW ENGLAND DISTRICT CORPS OF ENGINEERS

BOURNE HIGHWAY BRIDGE
ROUTINE INSPECTION

NOTES BY: LICHTENSTEIN
CONSULTING ENGINEERS

JOB #1986 | DATE: 7/16/98
CREW: SD, WW | SHEET 3 OF 8

* EL, AP 8/19/98

191
227

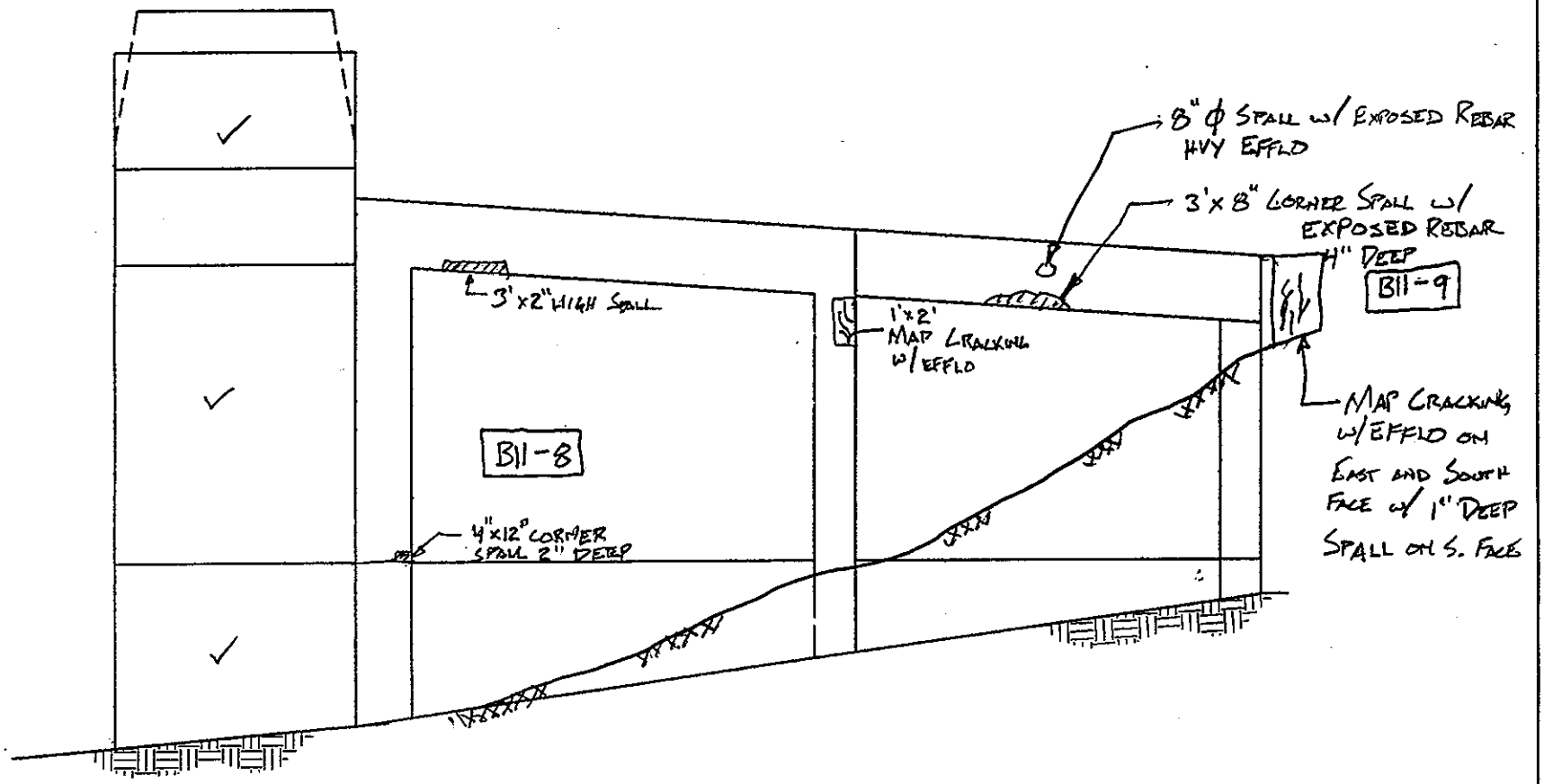

N ABUTMENT
E ELEVATION

EL
NOTES:
GENERAL NOTE: HEAVY VEGETATION ALONG WINGWALL

SUBSTRUCTURE

DEPARTMENT OF THE ARMY
NEW ENGLAND DISTRICT CORPS OF ENGINEERS

BOURNE HIGHWAY BRIDGE
ROUTINE INSPECTION

NOTES BY: LICHTENSTEIN
CONSULTING ENGINEERS

JOB #1986	DATE: 7/16/98
CREW: SD, WW	SHEET 5 OF 8

192
227

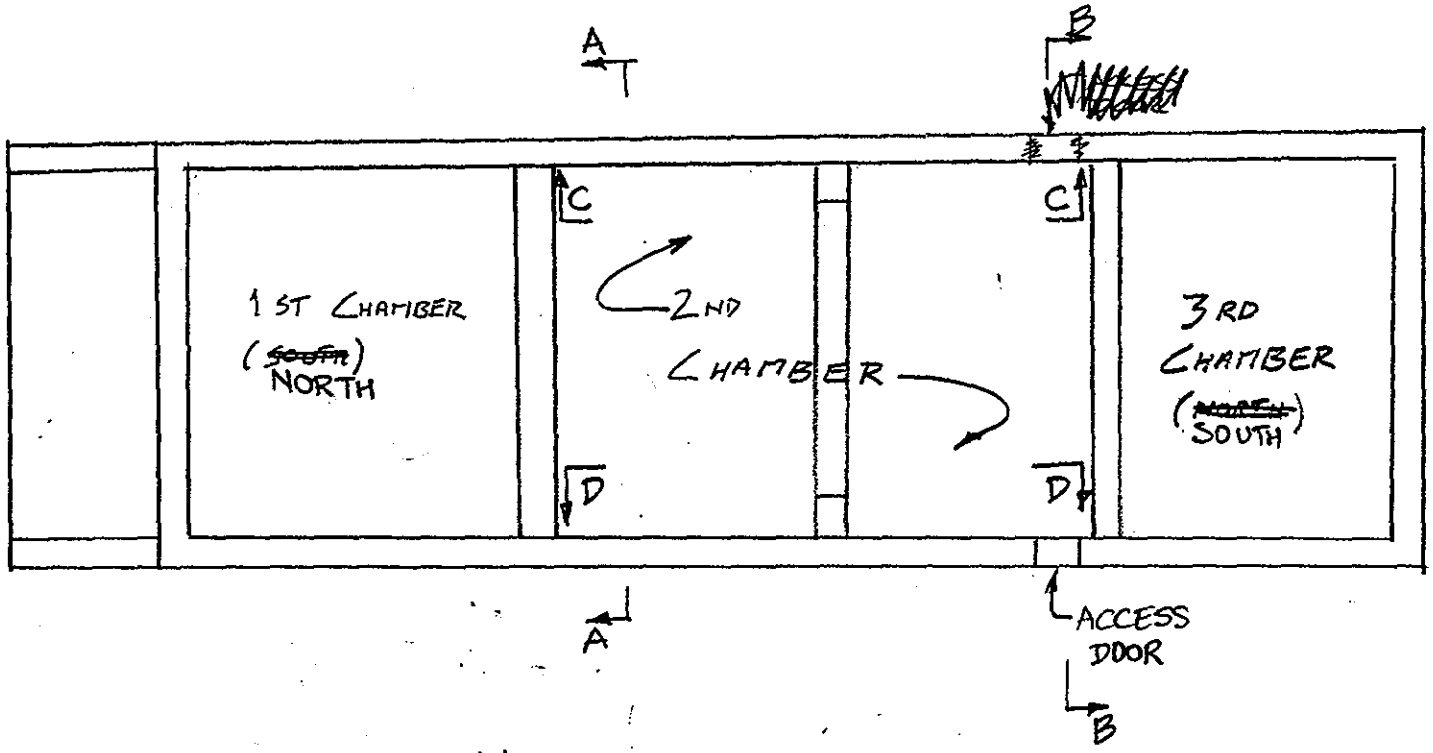

NORTH ABUTMENT

PLAN VIEW

(193 227)

NOTES:

SUBSTRUCTURE

DEPARTMENT OF THE ARMY
NEW ENGLAND DISTRICT CORPS OF ENGINEERS

BOURNE HIGHWAY BRIDGE
ROUTINE INSPECTION

NOTES BY: LICHTENSTEIN
CONSULTING ENGINEERS

JOB #1986	DATE: 7/28/93
CREW: WL, SD	SHEET 1 OF 28

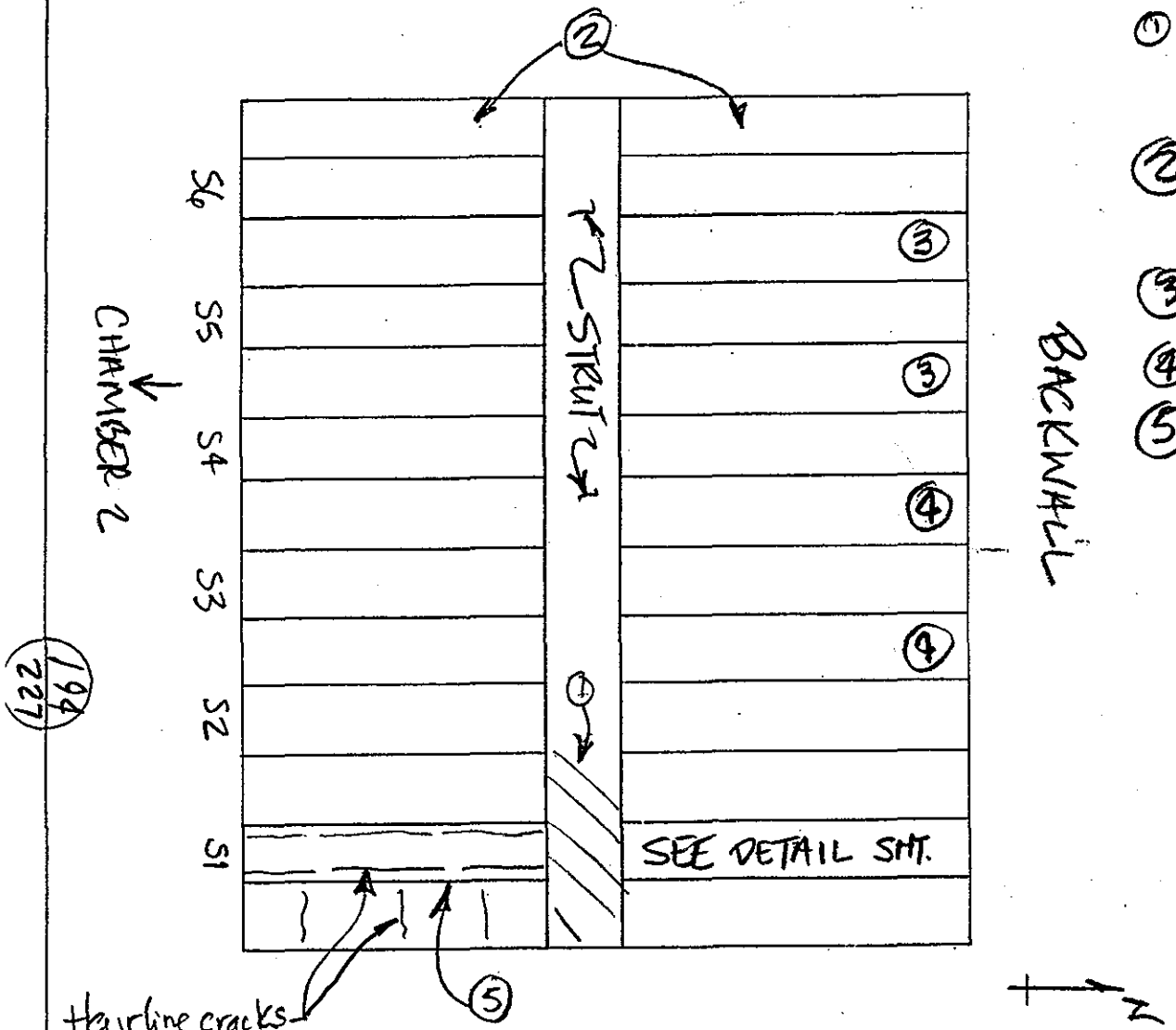

① 3' long hollow area, full width of strut.

② Mapcracking w/ leaching over entire bay.

③ Sim ②, full width, N. ½ of bay

④ " " " " N. ¼ " "

⑤ W. face of stringer has hairline cracks w/ efflo 90% of length near top of beam.

N ABUTMENT, CHAMBER 1
UNDERSIDE OF DECK
(LOOKING UP)

NORTH ABUTMENT	
DEPARTMENT OF THE ARMY NEW ENGLAND DISTRICT CORPS OF ENGINEERS	
BOURNE HIGHWAY BRIDGE ROUTINE INSPECTION	
NOTES BY: LICHTENSTEIN CONSULTING ENGINEERS	
JOB #1986	DATE: 8-19-98
CREW: EL, FP	SHEET 1 OF 1

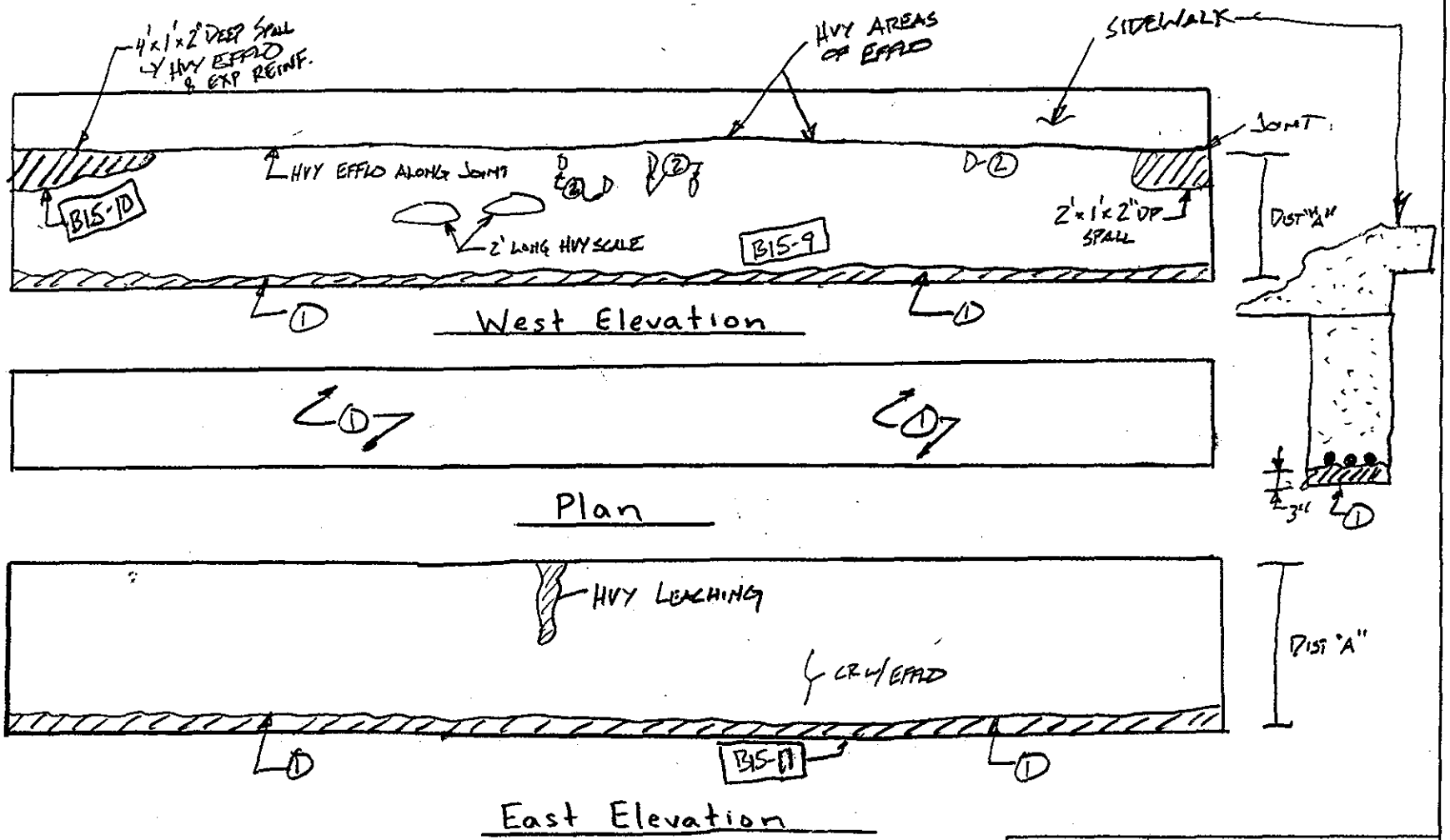

NOTES:

(2) RUST STAINS

(1) ENTIRE BOTTOM COVER SPALLED / MISSING W/ HVY RUST ON REBAR W/ LOSS

1/8" LOSS ≈ 3" DEEP OF COVER MISSING

N. Abutment, Chamber 1 Stringer 1 North	
DEPARTMENT OF THE ARMY NEW ENGLAND DISTRICT CORPS OF ENGINEERS	
BOURNE HIGHWAY BRIDGE ROUTINE INSPECTION	
NOTES BY: LICHTENSTEIN CONSULTING ENGINEERS	
JOB #1986	DATE: 7/23/90
CREW: W², GD	SHEET 2 OF 28

195
727

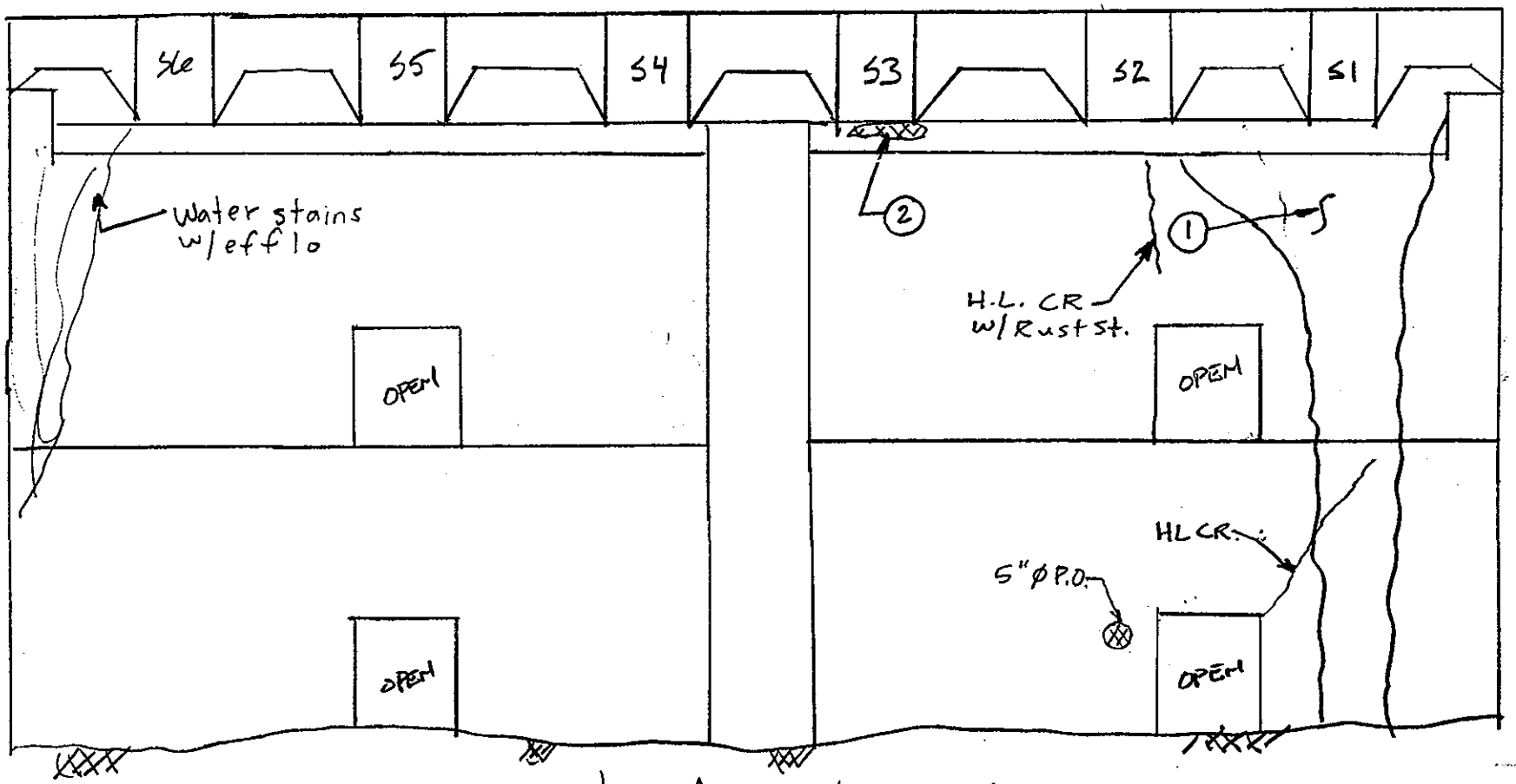

North Abut - Chamber 1
South Wall - North Elev

① H.L. Cr. w/ Hvy. efflo & Rust Stains, Heavy water staining

② Spalled area w/ exposed Steel Shim which is causing Rust stains @ Each Stringer

N. ABUT.

DEPARTMENT OF THE ARMY
NEW ENGLAND DISTRICT CORPS OF ENGINEERS

BOURNE HIGHWAY BRIDGE
ROUTINE INSPECTION

NOTES BY: LICHTENSTEIN CONSULTING ENGINEERS (W²)

JOB #1986	DATE: 7/28/98
CREW: SD, W²	SHEET 4 OF 28

196/227

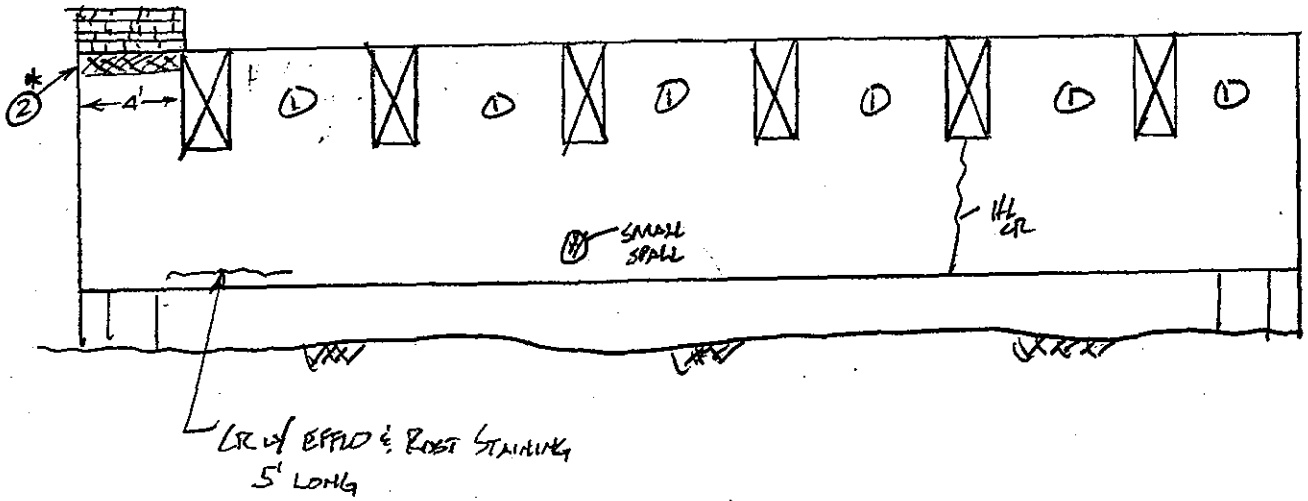

N. WALL - CHAMBER #1
S. ELEV

NOTES:

1. TYP HVY LEACHING BTWN STRINGERS B15-7,8
2. * 6" x 6" CORNER SPALL (W/ HVY. EFFLO. FULL HT. OF WALL)

* FP, EL 8/19/98

N. ABUT CHAMBER #1

DEPARTMENT OF THE ARMY
NEW ENGLAND DISTRICT CORPS OF ENGINEERS

BOURNE HIGHWAY BRIDGE
ROUTINE INSPECTION

NOTES BY: LICHTENSTEIN CONSULTING ENGINEERS

JOB #1986 | DATE: 7/28/98
CREW: H; SO | SHEET 6 OF 28

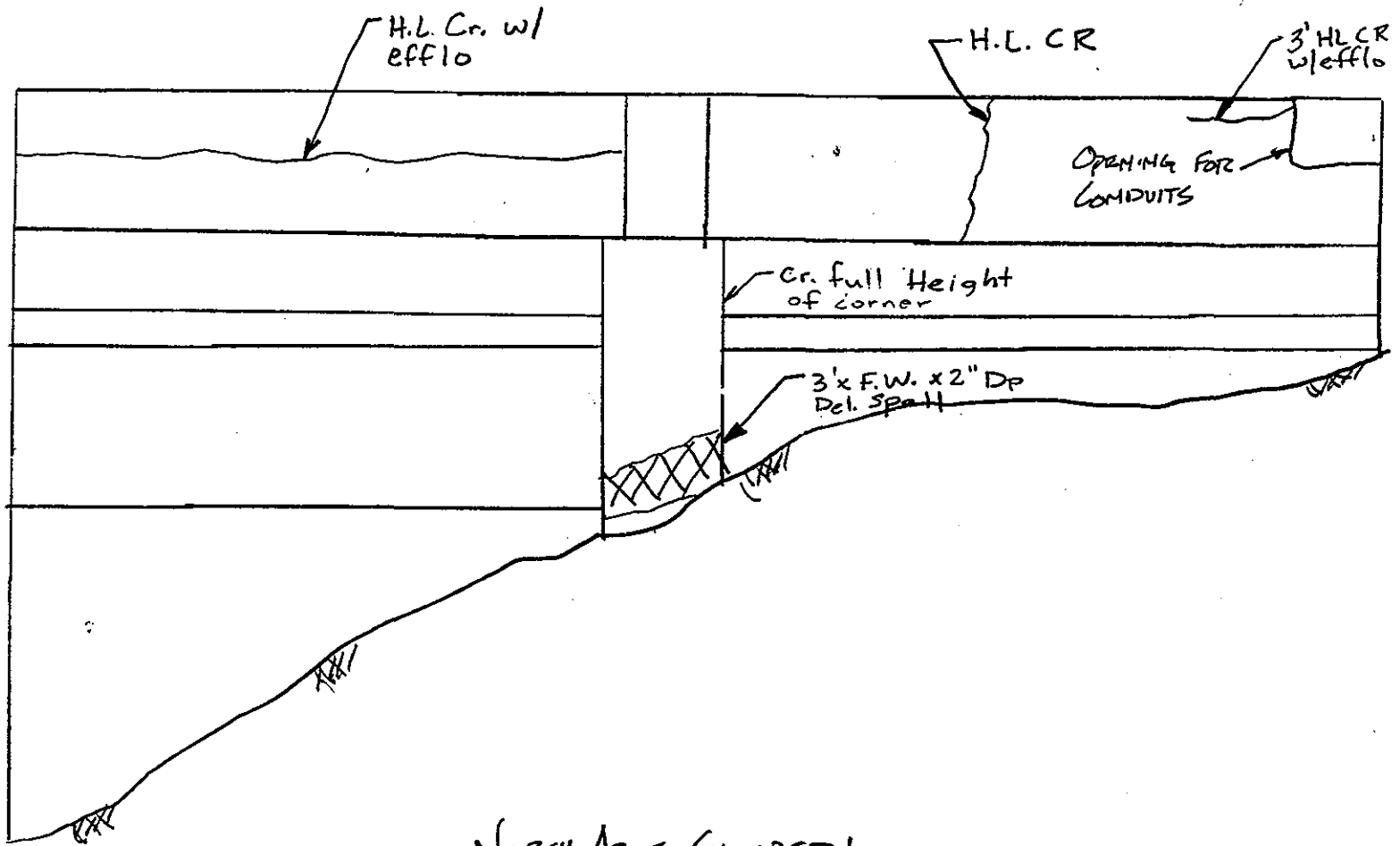

North Abut-Chamber 1
West Wall-East Elev

NOTES:

N. ABUT.

DEPARTMENT OF THE ARMY
NEW ENGLAND DISTRICT CORPS OF ENGINEERS

BOURNE HIGHWAY BRIDGE
ROUTINE INSPECTION

NOTES BY: LICHTENSTEIN CONSULTING ENGINEERS (W2)

JOB #1986	DATE: 7/28/98
CREW: SD, W2	SHEET 3 OF 28

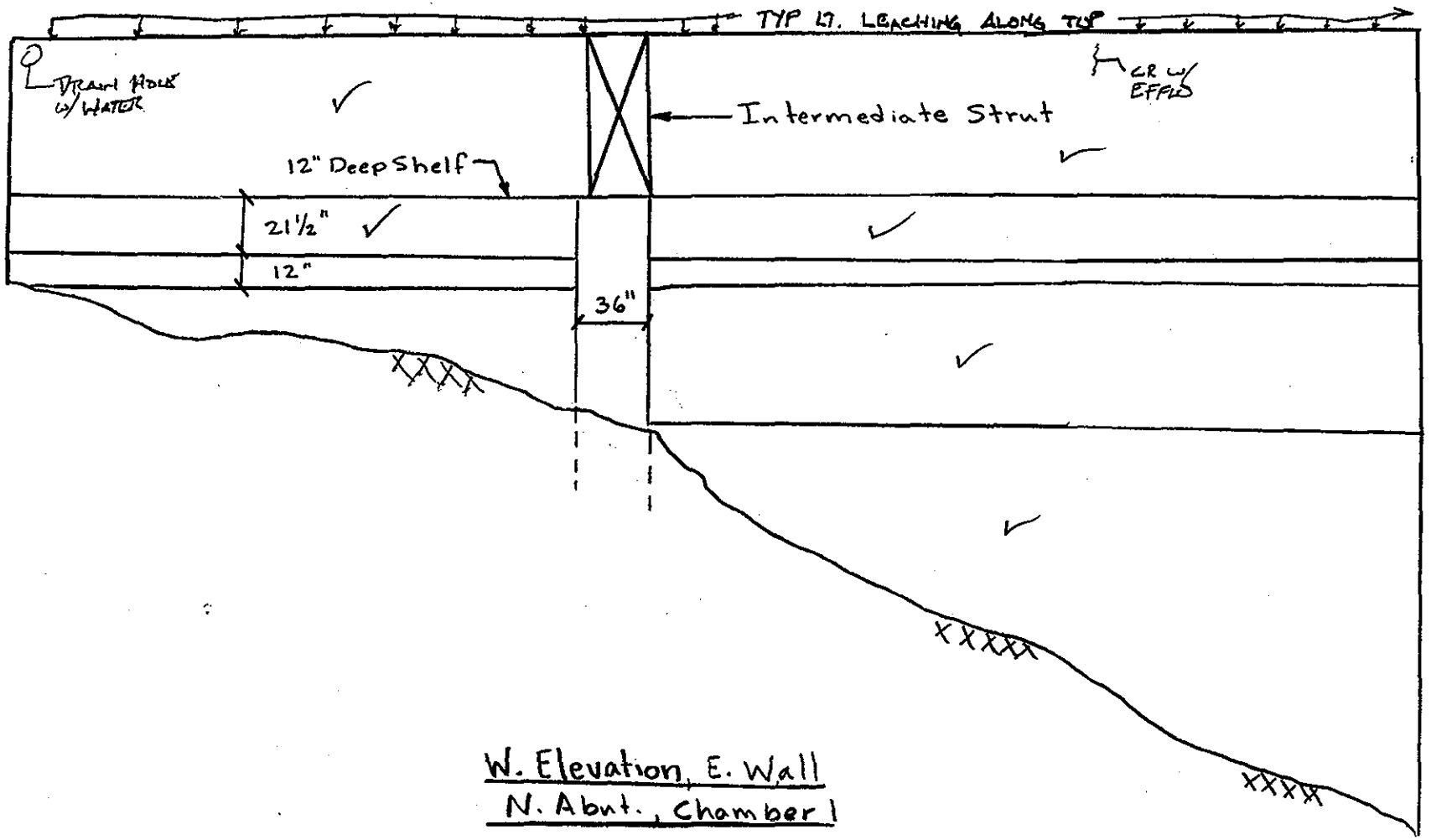

W. Elevation, E. Wall
N. Abut., Chamber 1

NOTES:

N. ABUT.

DEPARTMENT OF THE ARMY
NEW ENGLAND DISTRICT CORPS OF ENGINEERS

BOURNE HIGHWAY BRIDGE
ROUTINE INSPECTION

NOTES BY: LICHTENSTEIN
CONSULTING ENGINEERS

W²

JOB #1986	DATE: 7/28/93
CREW: W², SD	SHEET 5 OF 28

199

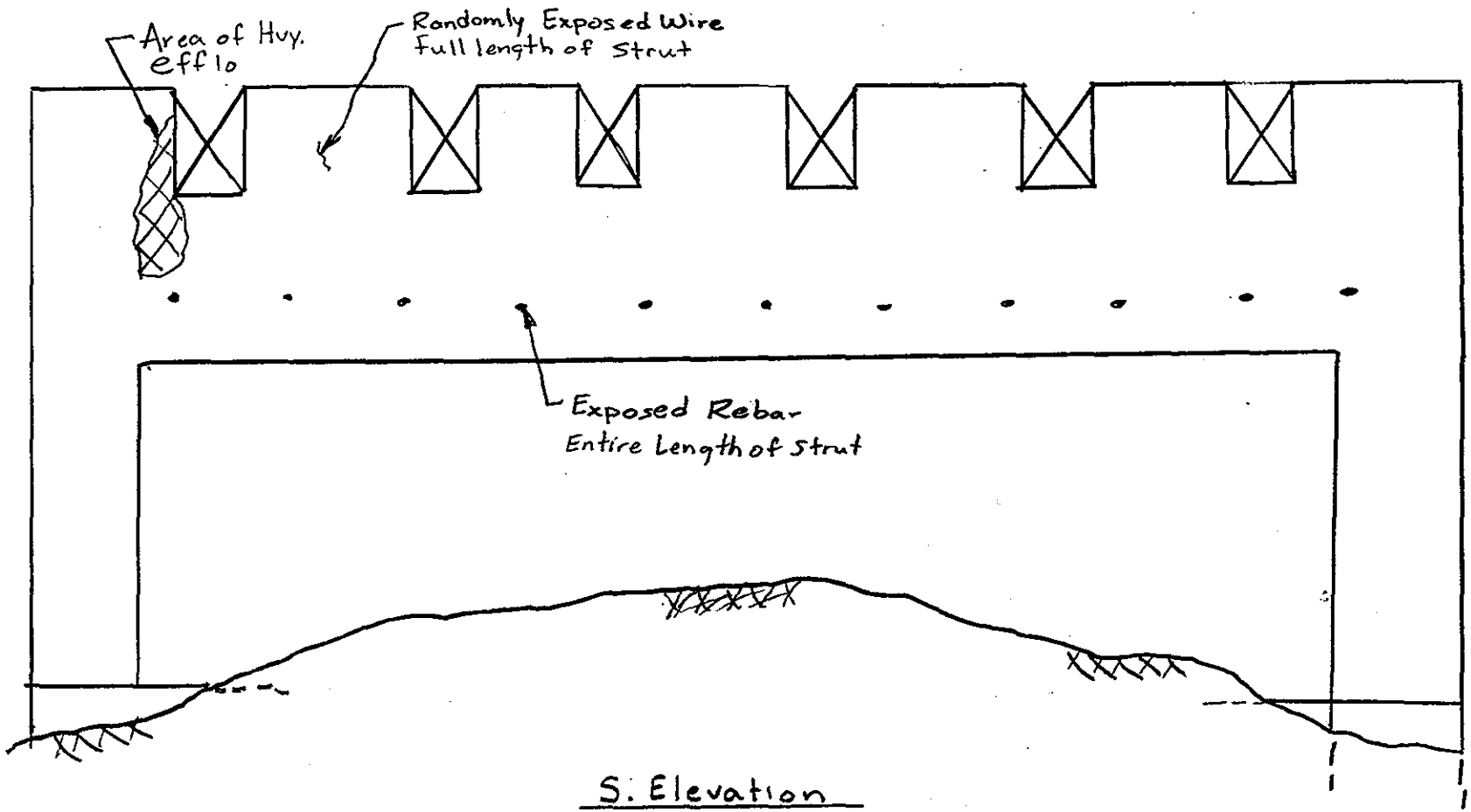

S. Elevation
N. Abut. Chamber 1
Strut (Intermediate)

___ ABUTMENT
___ ELEVATION

NOTES:

SUBSTRUCTURE

DEPARTMENT OF THE ARMY
NEW ENGLAND DISTRICT CORPS OF ENGINEERS

BOURNE HIGHWAY BRIDGE
ROUTINE INSPECTION

NOTES BY: LICHTENSTEIN CONSULTING ENGINEERS

JOB #1986	DATE: 7/20/98
CREW: SD, W²	SHEET 8 OF 28

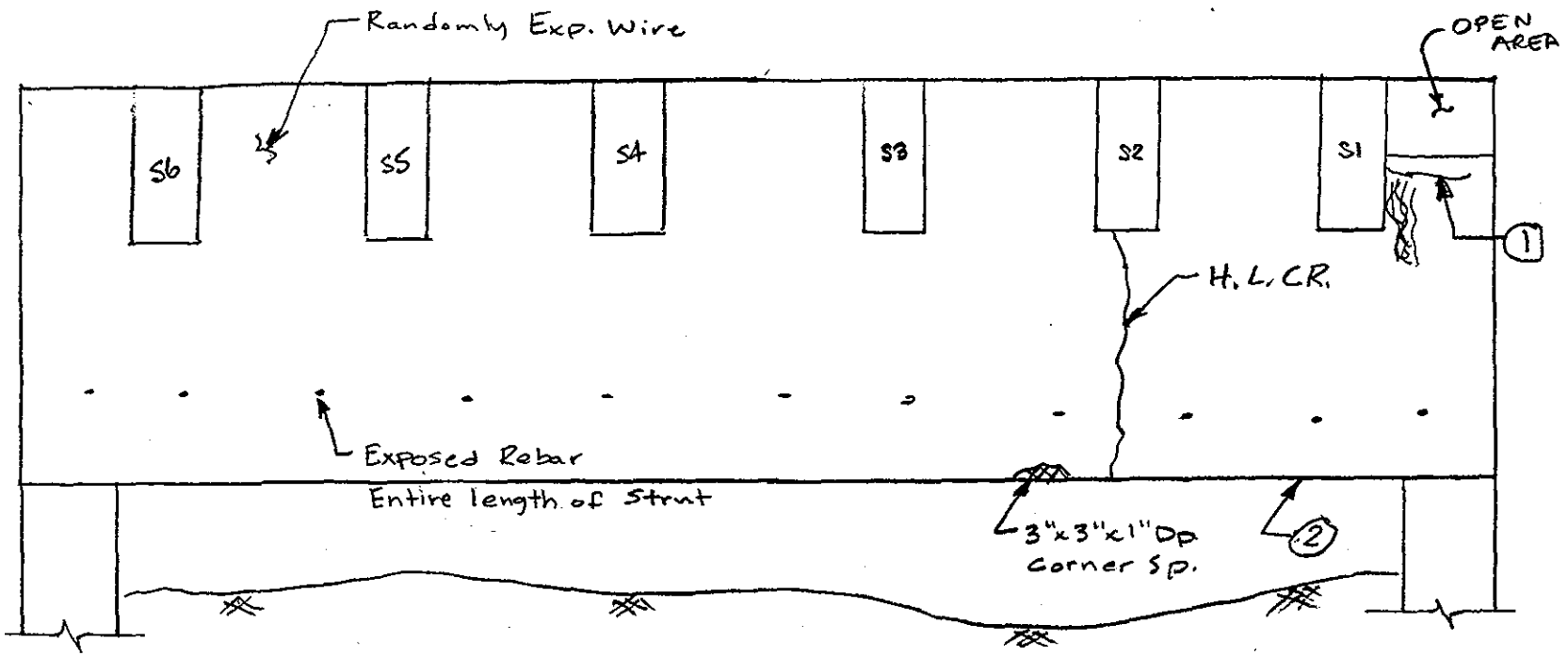

CHAMBER 1

INTERMEDIATE STRUT - N. ELEV.

N. ABUTMENT

NOTES: (1) H.L. Cr w/ efflo & Area of Heavy efflo & Rust Stain
(2) 4' x F.W. x 2" Dp. Del. Spall

SUBSTRUCTURE	
DEPARTMENT OF THE ARMY NEW ENGLAND DISTRICT CORPS OF ENGINEERS	
BOURNE HIGHWAY BRIDGE ROUTINE INSPECTION	
NOTES BY: LICHTENSTEIN CONSULTING ENGINEERS	
JOB #1986	DATE: 7/28/98
CREW: SD, W2	SHEET 7 OF 28

227
201

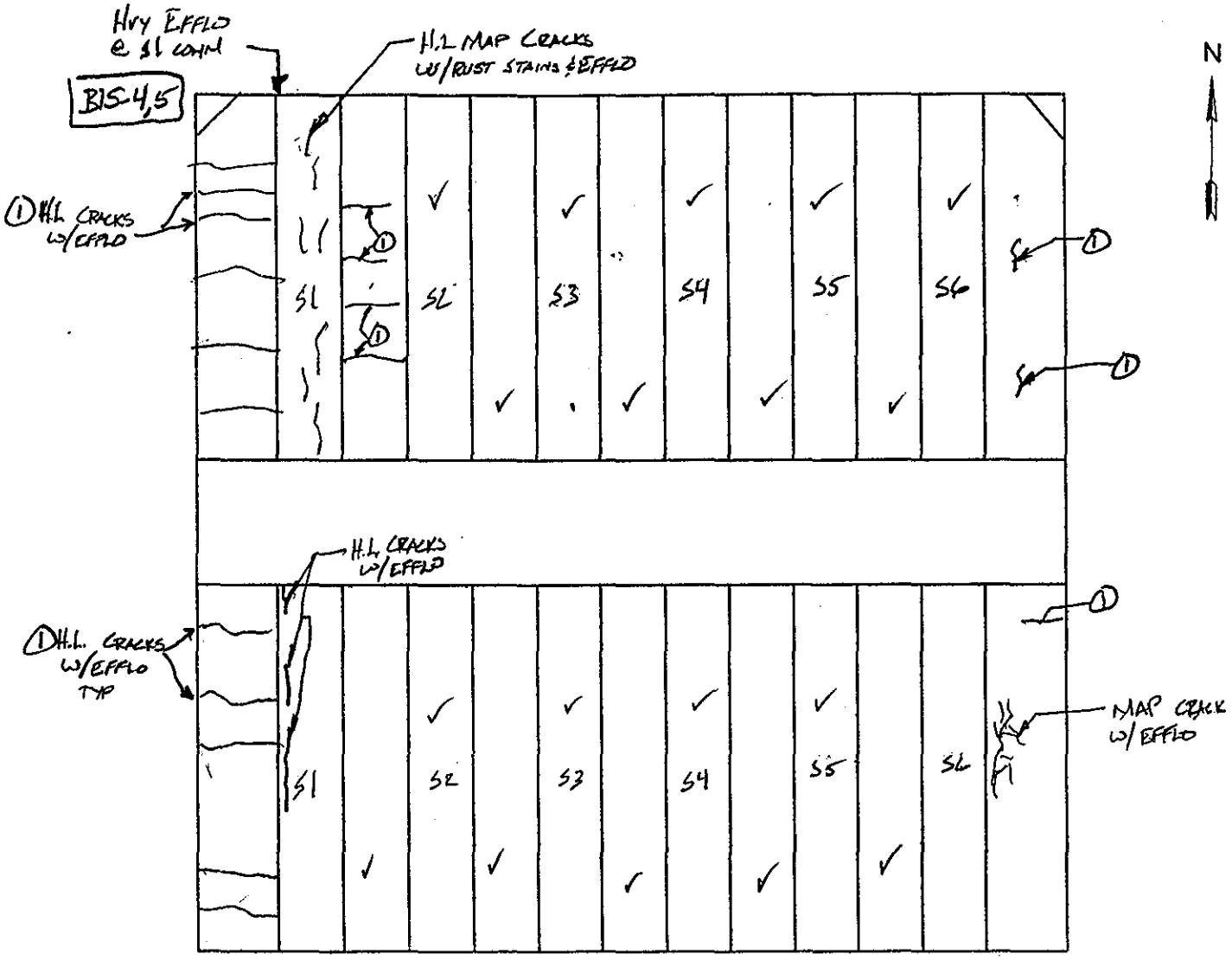

PLAN VIEW

N ABUTMENT CHAMBER 2 (MIDDLE)

NOTES:

SUBSTRUCTURE	
DEPARTMENT OF THE ARMY NEW ENGLAND DISTRICT CORPS OF ENGINEERS	
BOURNE HIGHWAY BRIDGE ROUTINE INSPECTION	
NOTES BY: LICHTENSTEIN CONSULTING ENGINEERS	
JOB #1986	DATE: 7/28/98
CREW: M², SP	SHEET 13 OF 28

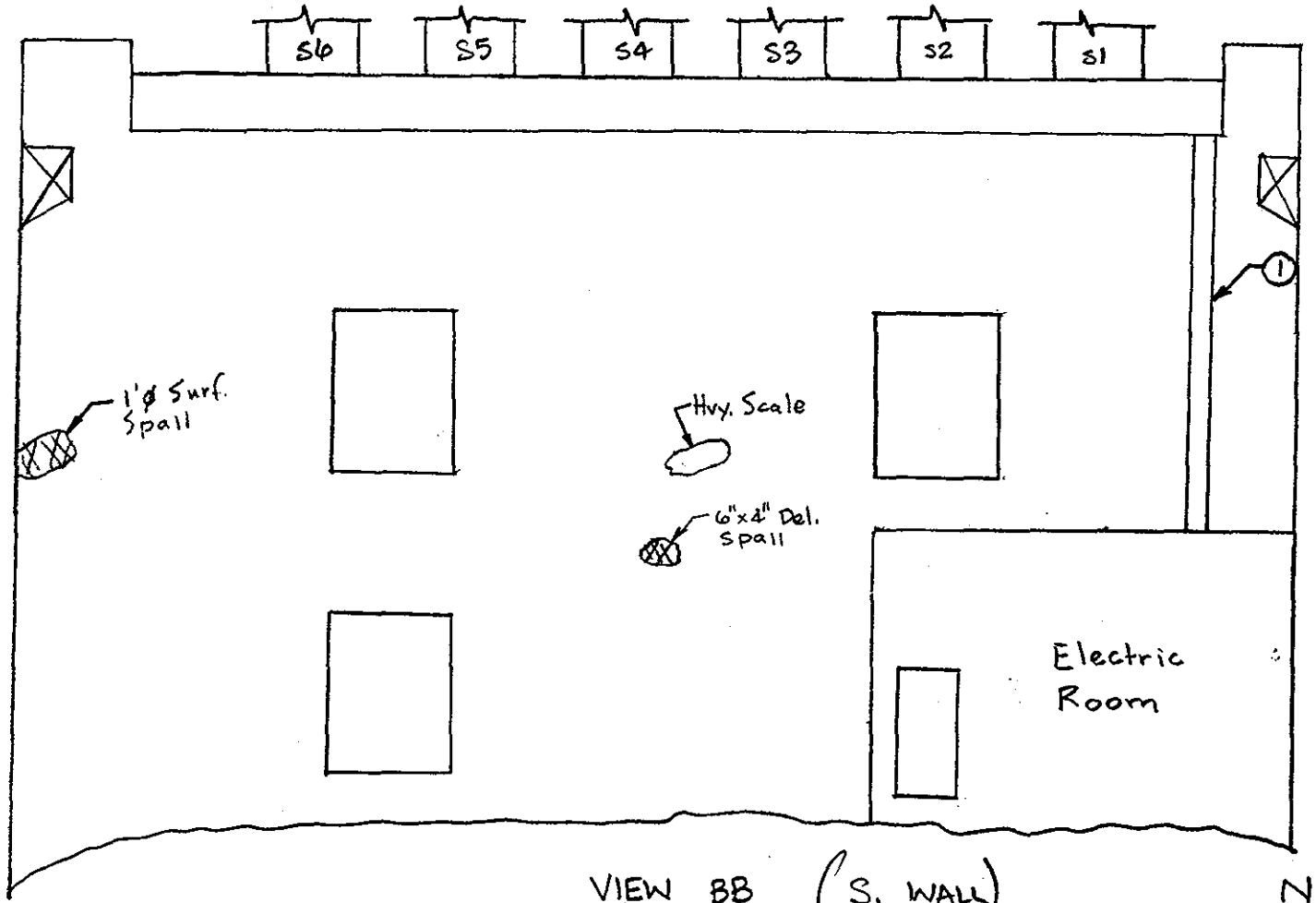

VIEW BB (S. WALL)

N ABUTMENT

~~ELEVATION~~

NOTES: ① Rust Stains along length of utility Condnit
② Top of wall has water Stains which Run down length of wall

SUBSTRUCTURE

DEPARTMENT OF THE ARMY
NEW ENGLAND DISTRICT CORPS OF ENGINEERS

BOURNE HIGHWAY BRIDGE
ROUTINE INSPECTION

NOTES BY: LICHTENSTEIN CONSULTING ENGINEERS

JOB #1986	DATE: 7/28/98
CREW: SD, W²	SHEET 11 OF 28

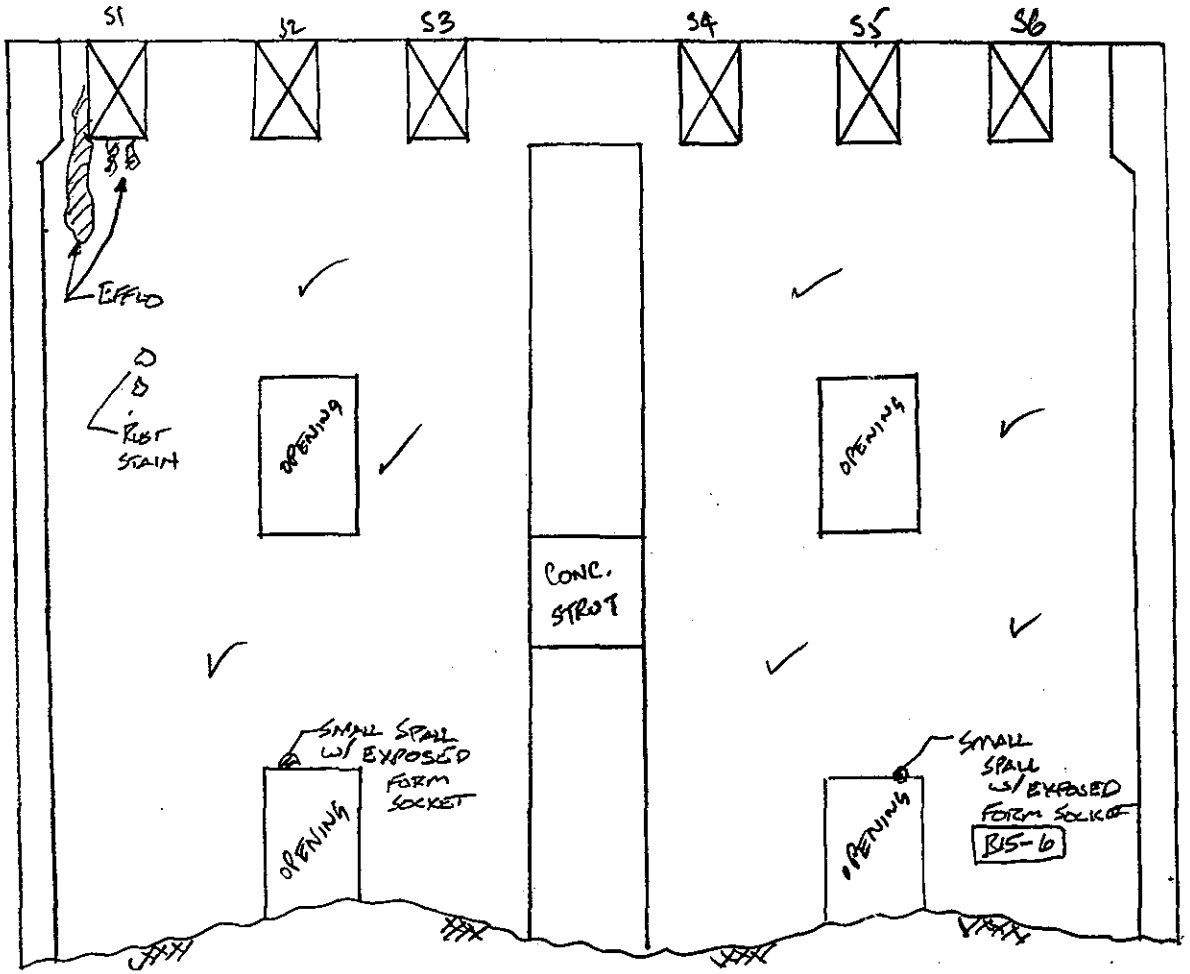

VIEW AA (N. WALL)

N ABUTMENT

NOTES:

SUBSTRUCTURE

DEPARTMENT OF THE ARMY
NEW ENGLAND DISTRICT CORPS OF ENGINEERS

BOURNE HIGHWAY BRIDGE
ROUTINE INSPECTION

NOTES BY: LICHTENSTEIN CONSULTING ENGINEERS

JOB #1986	DATE: 7/29/93
CREW: H², SD	SHEET 10 OF 28

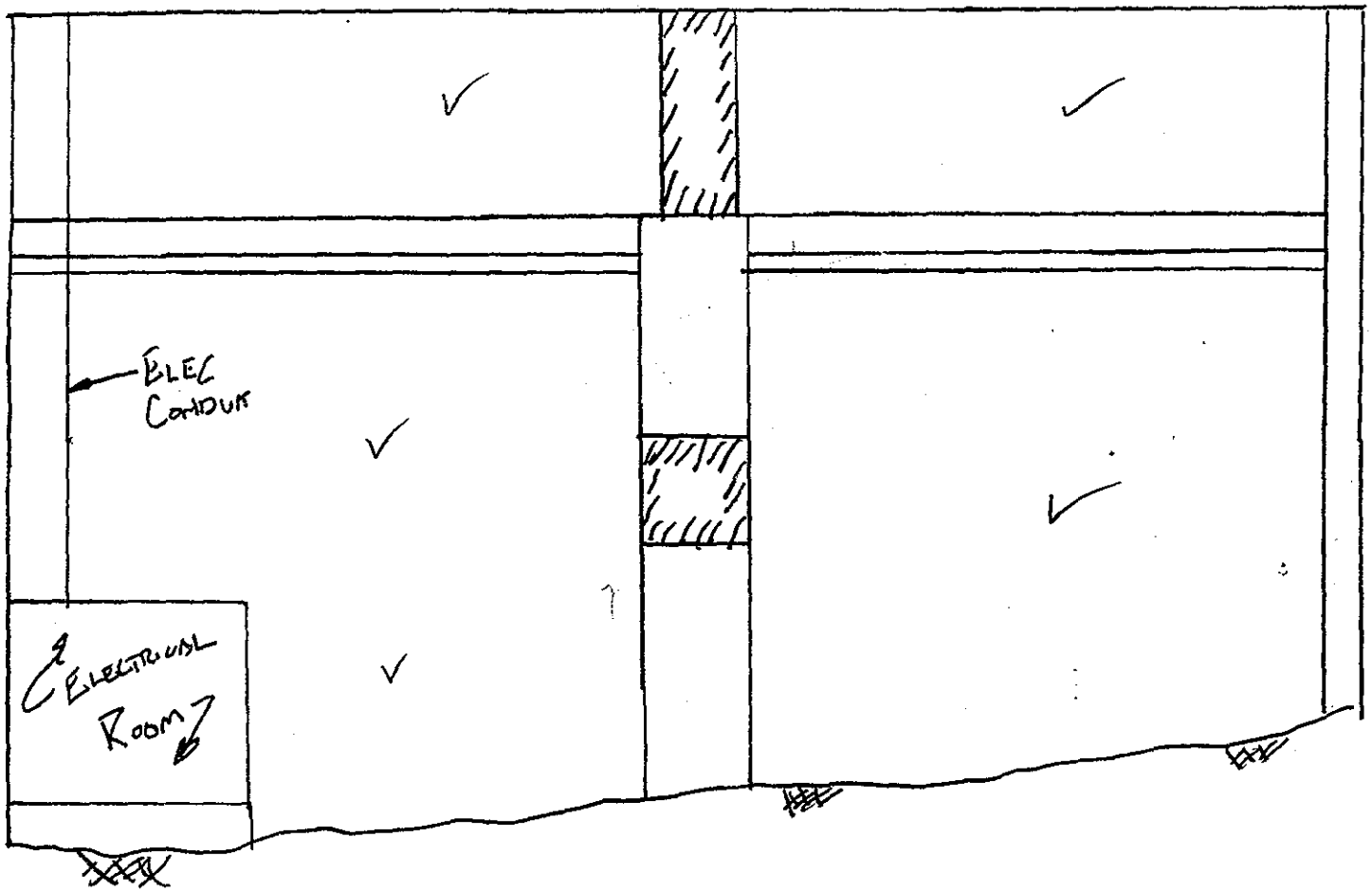

VIEW D-D

NORTH ABUT (INT) - CHAM #2

WEST WALL

N. ABUT

DEPARTMENT OF THE ARMY
NEW ENGLAND DISTRICT CORPS OF ENGINEERS

BOURNE HIGHWAY BRIDGE
ROUTINE INSPECTION

NOTES BY: LICHTENSTEIN
CONSULTING ENGINEERS

JOB #1986	DATE: 7/23/98
CREW: WC, SD	SHEET 9 OF 28

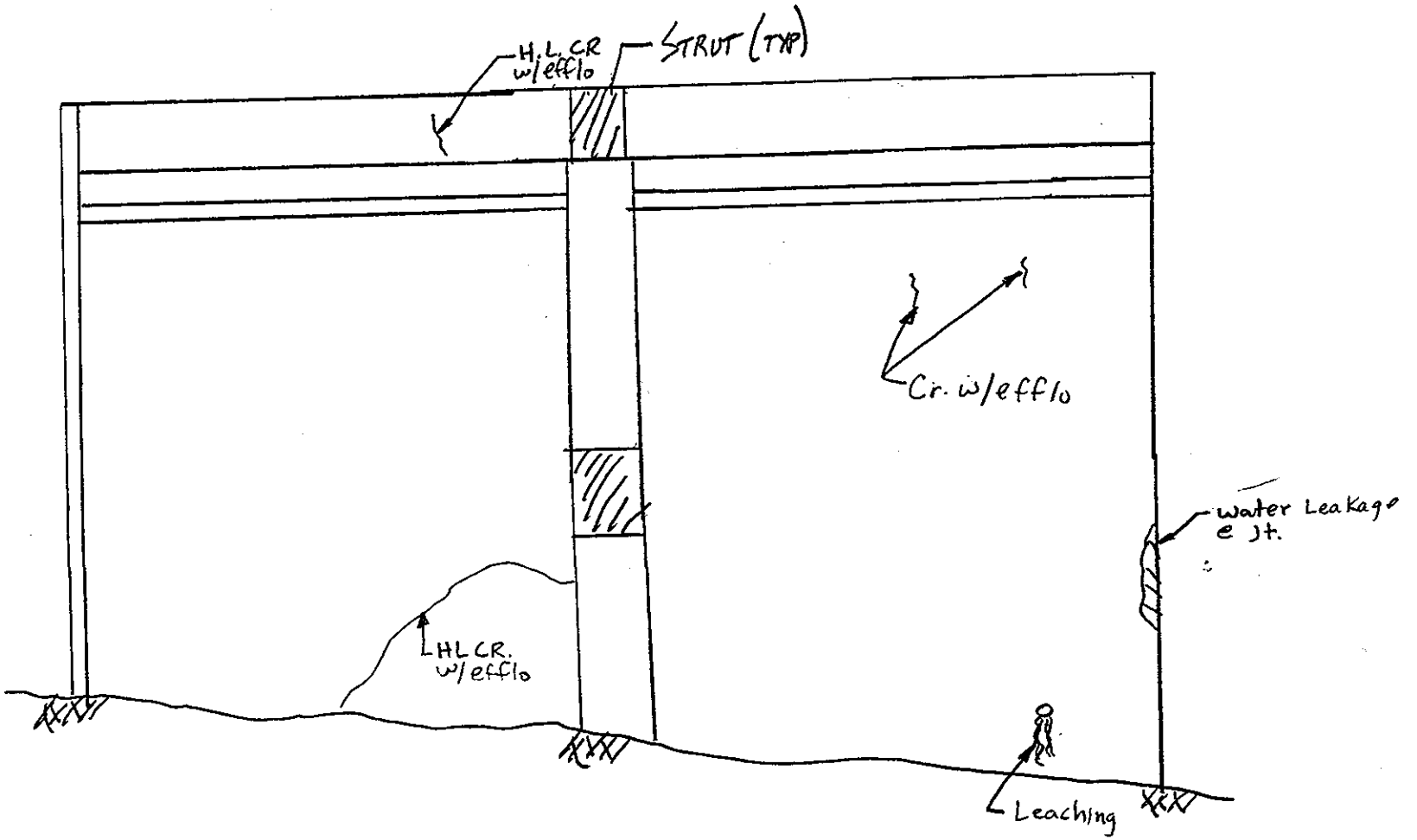

VIEW C-C

NORTH ABUT (INT) - CHAMBER #2
EAST WALL

N. ABUT

DEPARTMENT OF THE ARMY
NEW ENGLAND DISTRICT CORPS OF ENGINEERS

BOURNE HIGHWAY BRIDGE
ROUTINE INSPECTION

NOTES BY: LICHTENSTEIN CONSULTING ENGINEERS W2

JOB #1986	DATE: 7/28/98
CREW: SD, W2	SHEET 12 OF 28

L22 206

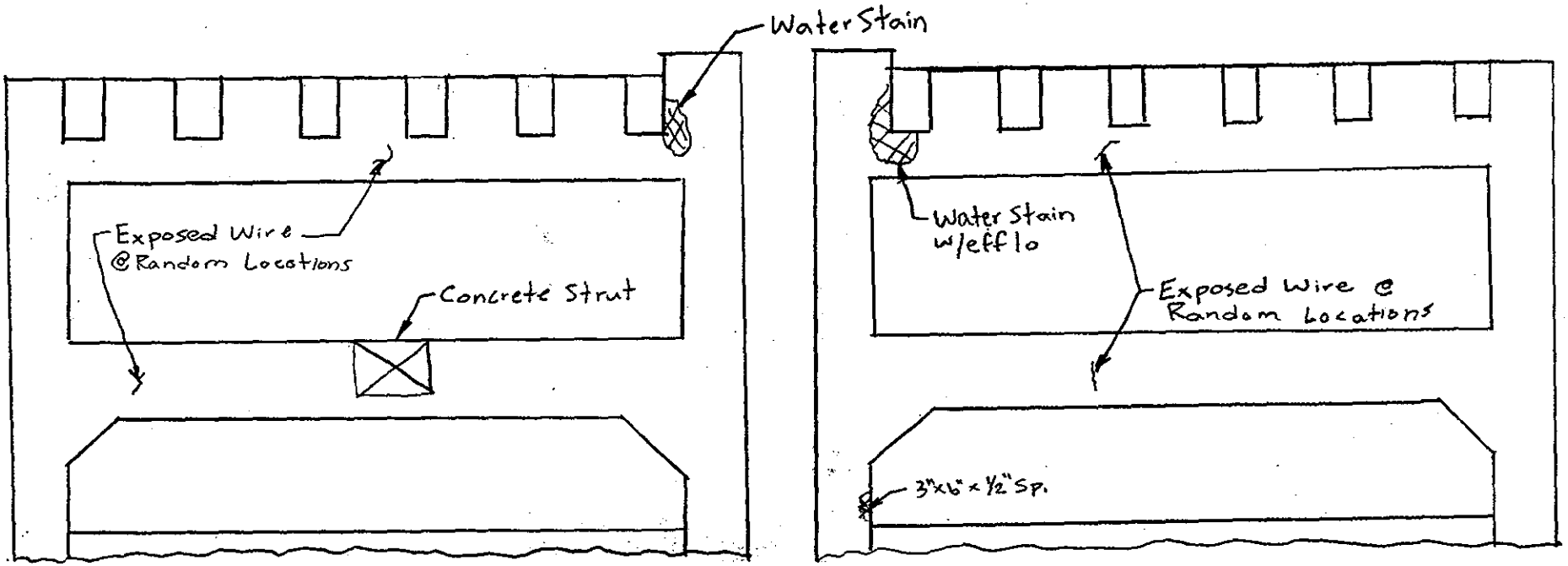

N. ELEV. CENTER BEAM

S. ELEV. CENTER BEAM

~~SOUTH~~ NORTH ABUT- CHAMBER 2

NOTES:

N. ABUT

DEPARTMENT OF THE ARMY
NEW ENGLAND DISTRICT CORPS OF ENGINEERS

BOURNE HIGHWAY BRIDGE
ROUTINE INSPECTION

NOTES BY: LICHTENSTEIN CONSULTING ENGINEERS

JOB #1986 | DATE: 7/28/98

CREW: SD, WZ | SHEET 14 OF 28

207
227

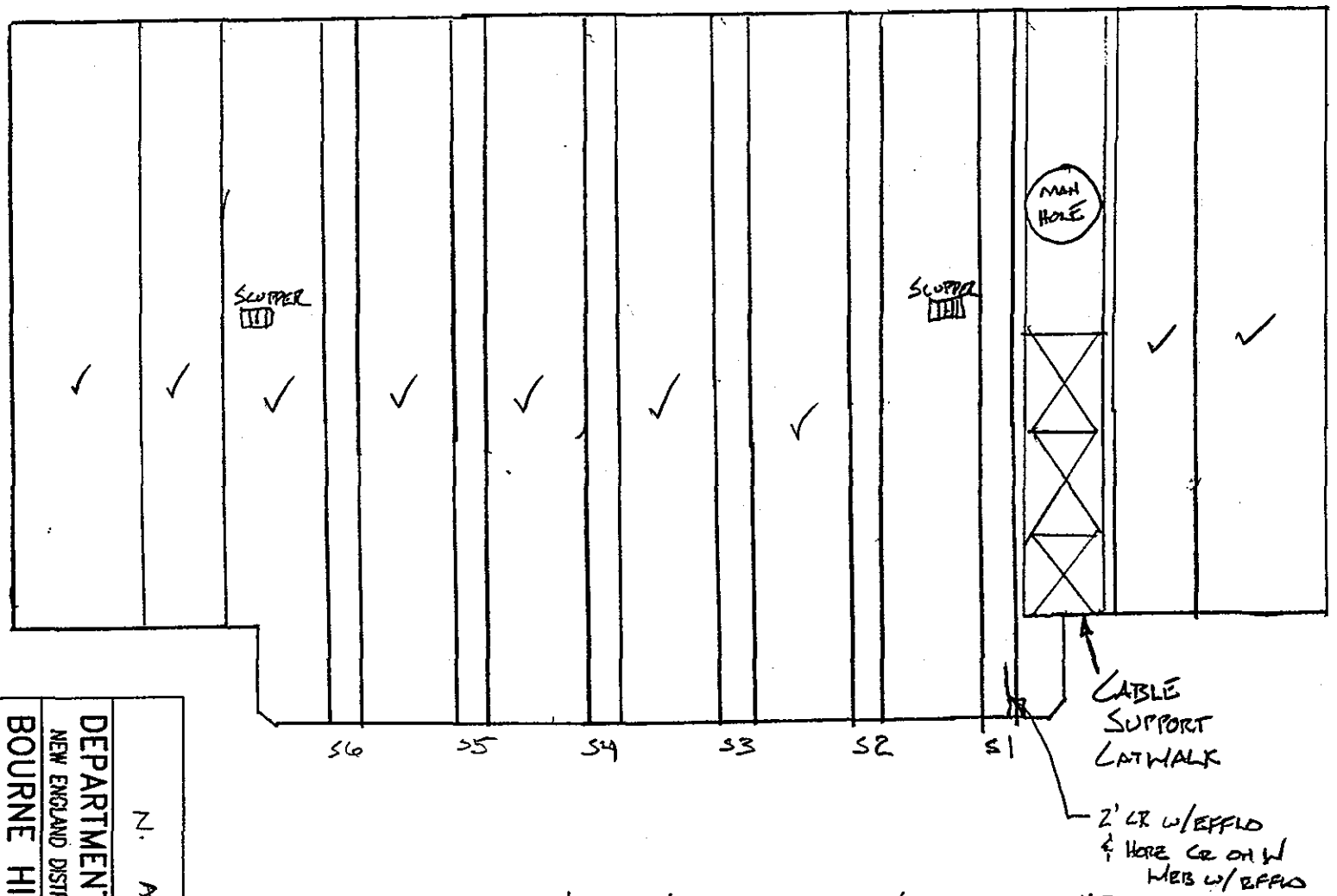

NORTH ABUT INT - S. CHAMBER #3

UNDERSIDE OF DECK

N. ABUT.

DEPARTMENT OF THE ARMY
NEW ENGLAND DISTRICT CORPS OF ENGINEERS
BOURNE HIGHWAY BRIDGE
ROUTINE INSPECTION

NOTES BY: LICHTENSTEIN CONSULTING ENGINEERS

JOB #1986 | DATE: 7/28/98

CREW: SD, WE | SHEET 15 OF 28

208
227

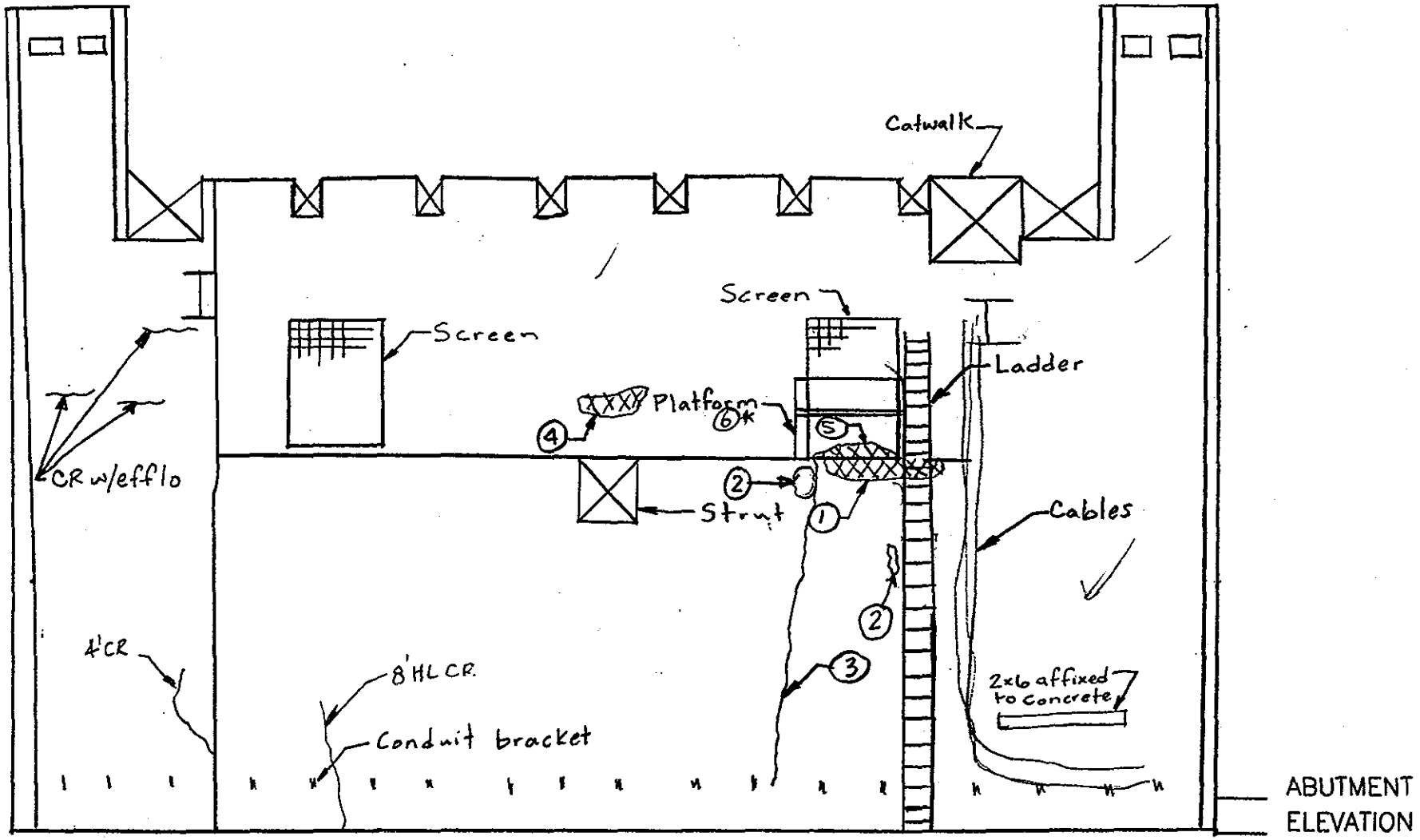

N. Abut, Interior J. Wall, N. Elev. Chamber* 3

NOTES:

1. 1'H x 6'W x up to 8" Dp Spall
2. Areas of Rust Stains along length of Ladder
3. 20' Cr. w/ efflo
4. 2'x1' Surface Spall
5. 12" x 4" x Full Width of Door Spall
6.* MAINT. PLATFORM SUPPORTS HAVE HVY. RUST & DETERIORATION UPTO 50% SECTION LOSS IN MEMBERS.

* FP, EL 8/19/98

SUBSTRUCTURE

DEPARTMENT OF THE ARMY
NEW ENGLAND DISTRICT CORPS OF ENGINEERS

BOURNE HIGHWAY BRIDGE
ROUTINE INSPECTION

NOTES BY: LICHTENSTEIN CONSULTING ENGINEERS

JOB #1986 | DATE: 7/28/98

CREW: SD, W² | SHEET 19 OF 28

209
227

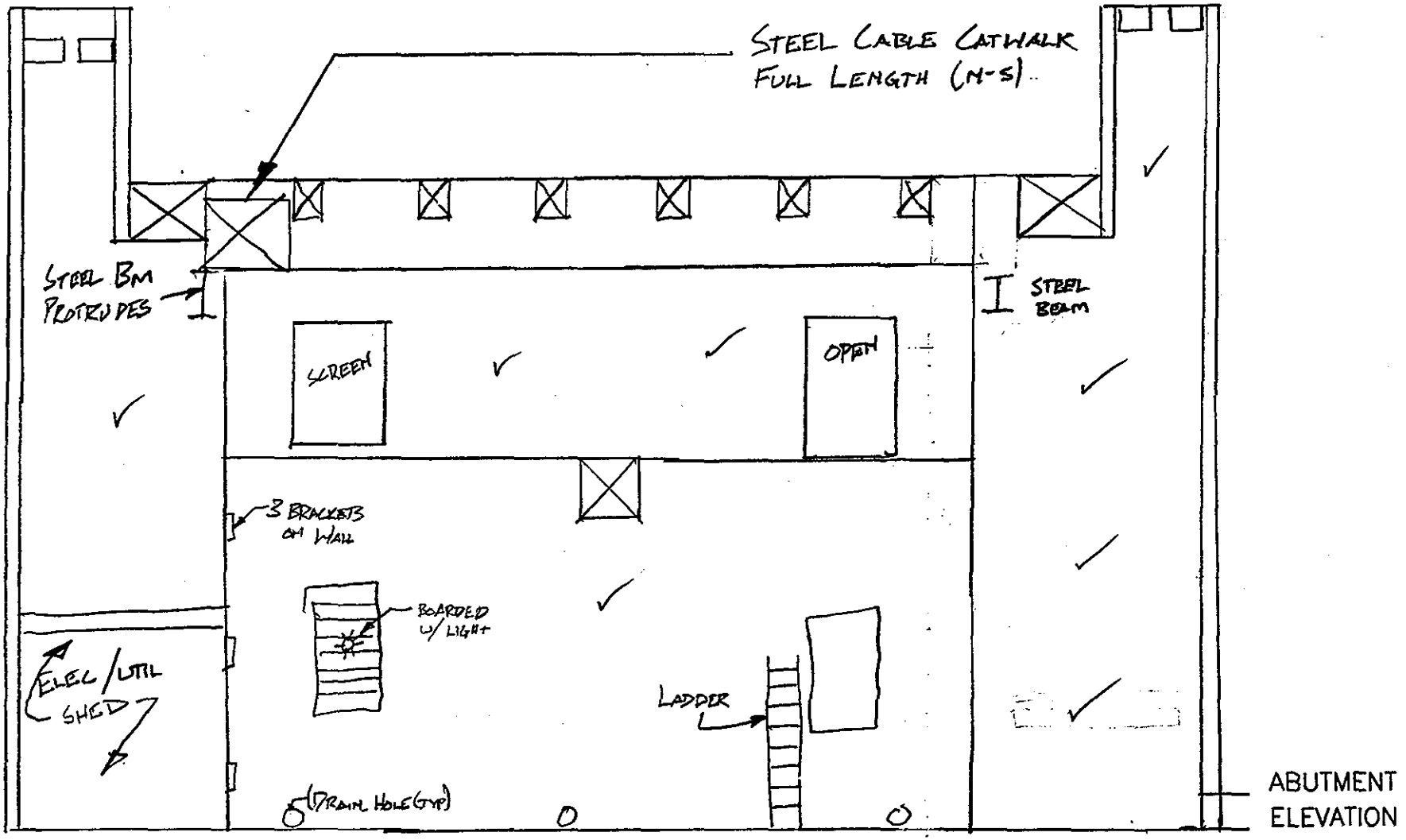

N. ABUT - S. CHAMBER #3 - N. WALL S. ELEV.

NOTES:

SUBSTRUCTURE	
DEPARTMENT OF THE ARMY NEW ENGLAND DISTRICT CORPS OF ENGINEERS	
BOURNE HIGHWAY BRIDGE ROUTINE INSPECTION	
NOTES BY: LICHTENSTEIN CONSULTING ENGINEERS	
JOB #1986	DATE: 7/28/98
CREW: SD, W²	SHEET 18 OF 28

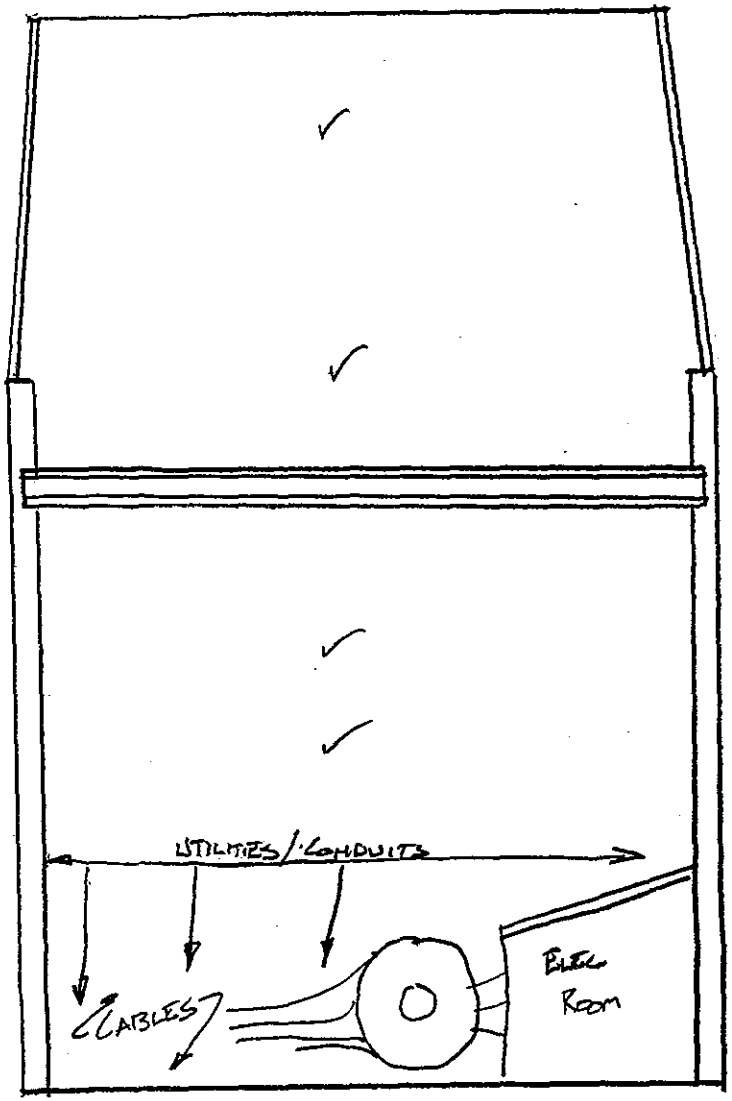

B15-2,3

NORTH ABUTMENT - CHAMBER 3
WEST WALL - EAST ELEV.

N. ABUT.

DEPARTMENT OF THE ARMY
NEW ENGLAND DISTRICT CORPS OF ENGINEERS

BOURNE HIGHWAY BRIDGE
ROUTINE INSPECTION

NOTES BY: LICHTENSTEIN CONSULTING ENGINEERS W²

JOB #1986	DATE: 7/28/99
CREW: W², SD	SHEET 16 OF 28

227/112

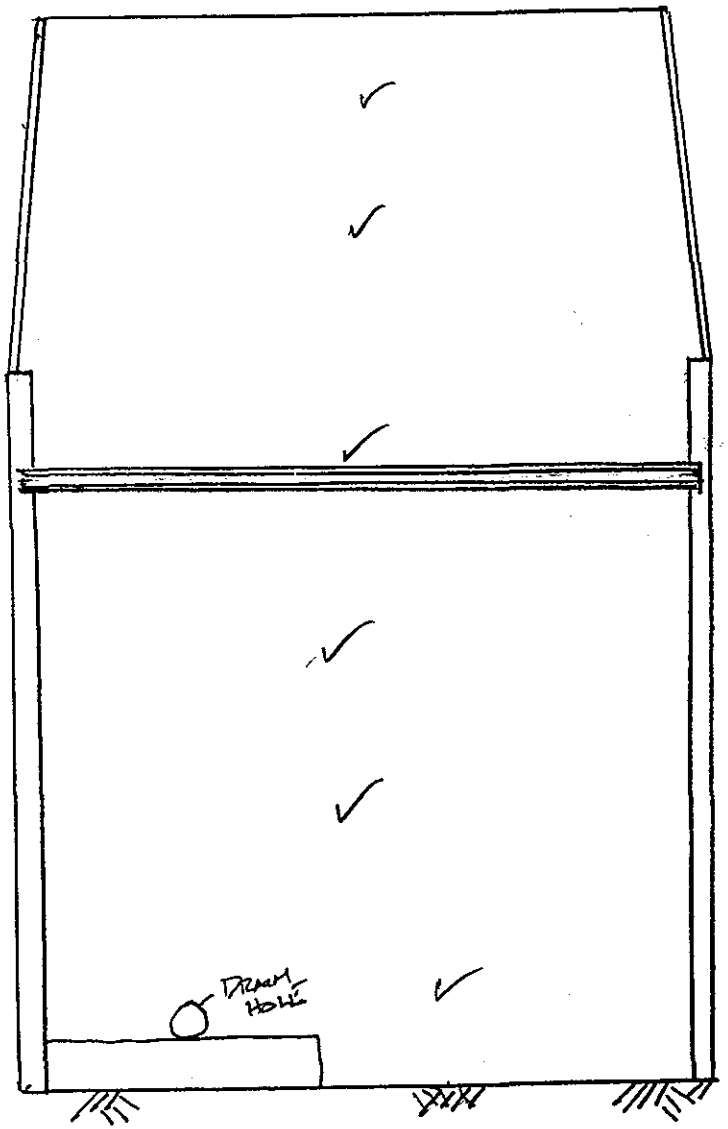

NORTH ABUTMENT – CHAMBER 3
EAST WALL – WEST ELEV.

N. ABUT.

DEPARTMENT OF THE ARMY
NEW ENGLAND DISTRICT CORPS OF ENGINEERS

BOURNE HIGHWAY BRIDGE
ROUTINE INSPECTION

NOTES BY: LICHTENSTEIN
CONSULTING ENGINEERS

JOB #1986	DATE: 7/28/98
CREW: W.C., SD	SHEET 17 OF 28

V. TOP OF DECK

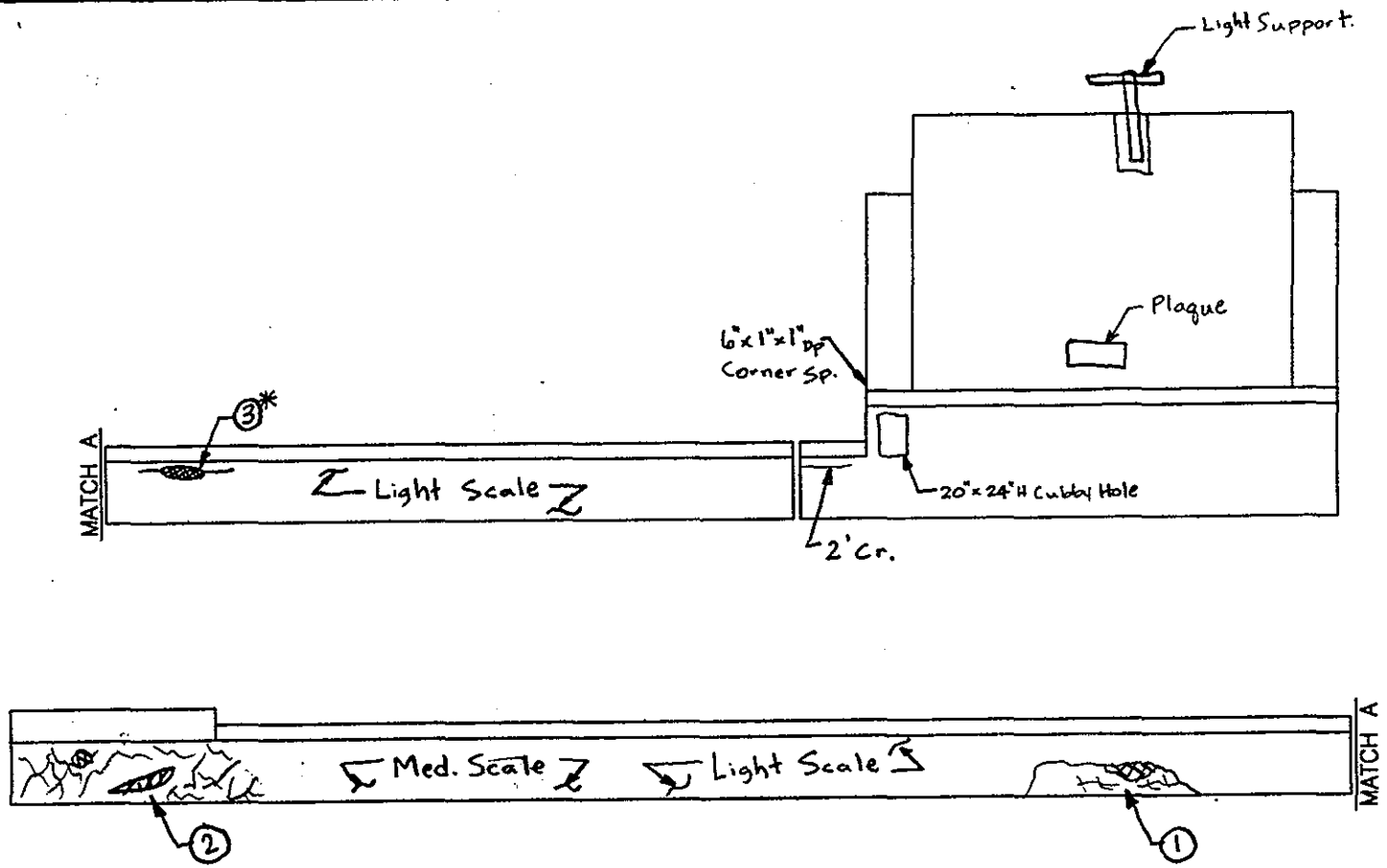

E. ELEVATION S.W. PARAPET

NOTES: ① 4'x1 patched Area w/ H.L. Map Cracks & 10"x8"x1" Dp Spall.
② 10'x3' patched Area w/ H.L. Map Cracks & 18"x7"x2" Dp Spall B16-14,15
*③ 8" L. x 2" W x 3/4" DEEP SPALL W/ HL Crack

* FP, EL 8/19/98

TOP OF DECK

DEPARTMENT OF THE ARMY
NEW ENGLAND DISTRICT CORPS OF ENGINEERS

BOURNE HIGHWAY BRIDGE
ROUTINE INSPECTION

NOTES BY: LICHTENSTEIN CONSULTING ENGINEERS

JOB #1986 | DATE: 7/27/98

CREW: SD, PW N, WJ2 FP | SHEET 13 OF 14

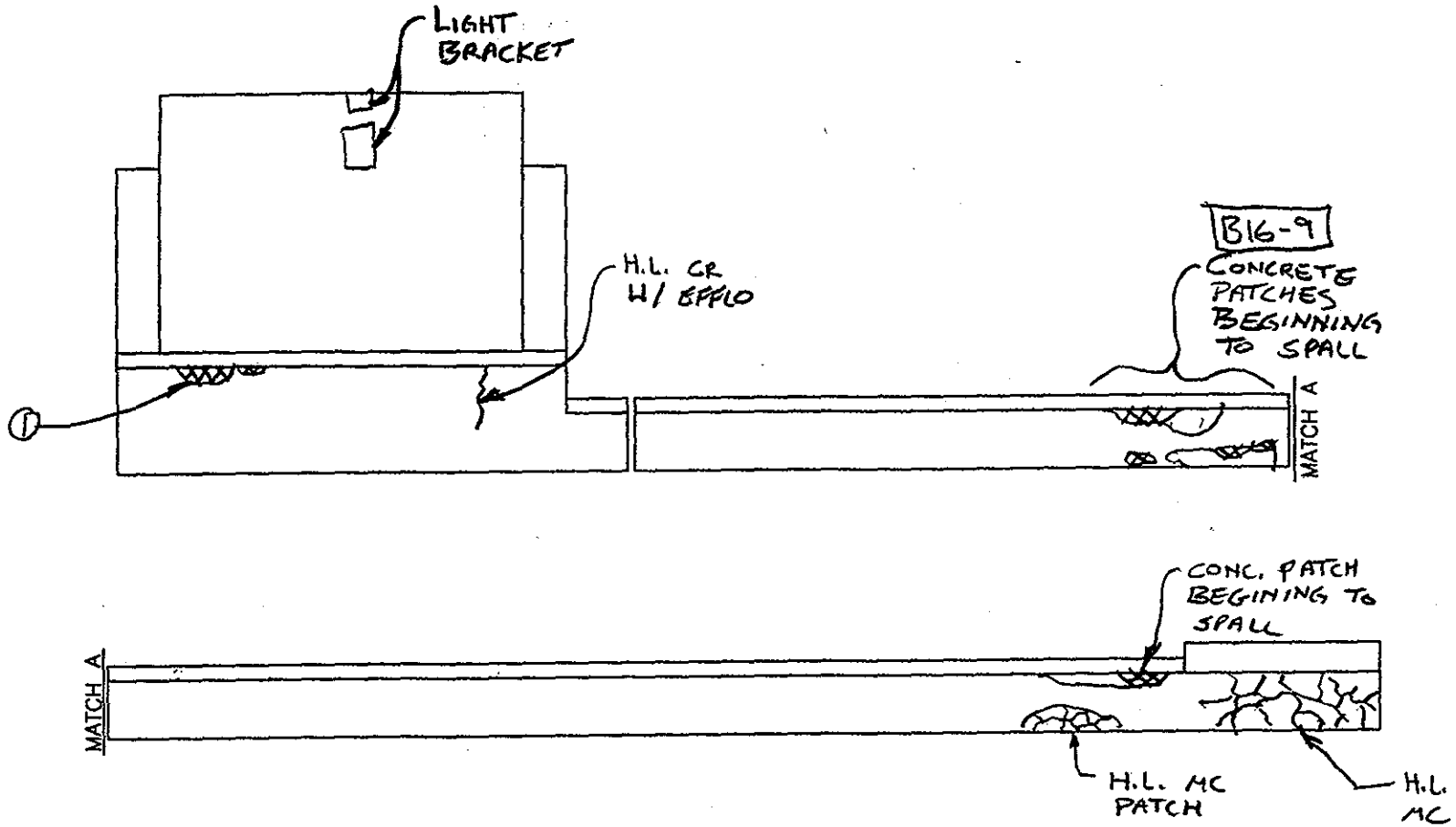

W ELEVATION SE PARAPET

NOTES: ① 24" W x 9" H x 1½" DP SPALL

TOP OF DECK

DEPARTMENT OF THE ARMY
NEW ENGLAND DISTRICT CORPS OF ENGINEERS

BOURNE HIGHWAY BRIDGE
ROUTINE INSPECTION

NOTES BY: LICHTENSTEIN CONSULTING ENGINEERS

JOB #1986 | DATE: 7/27/98

CREW: PWN & WW | SHEET 14 OF 14

227/212

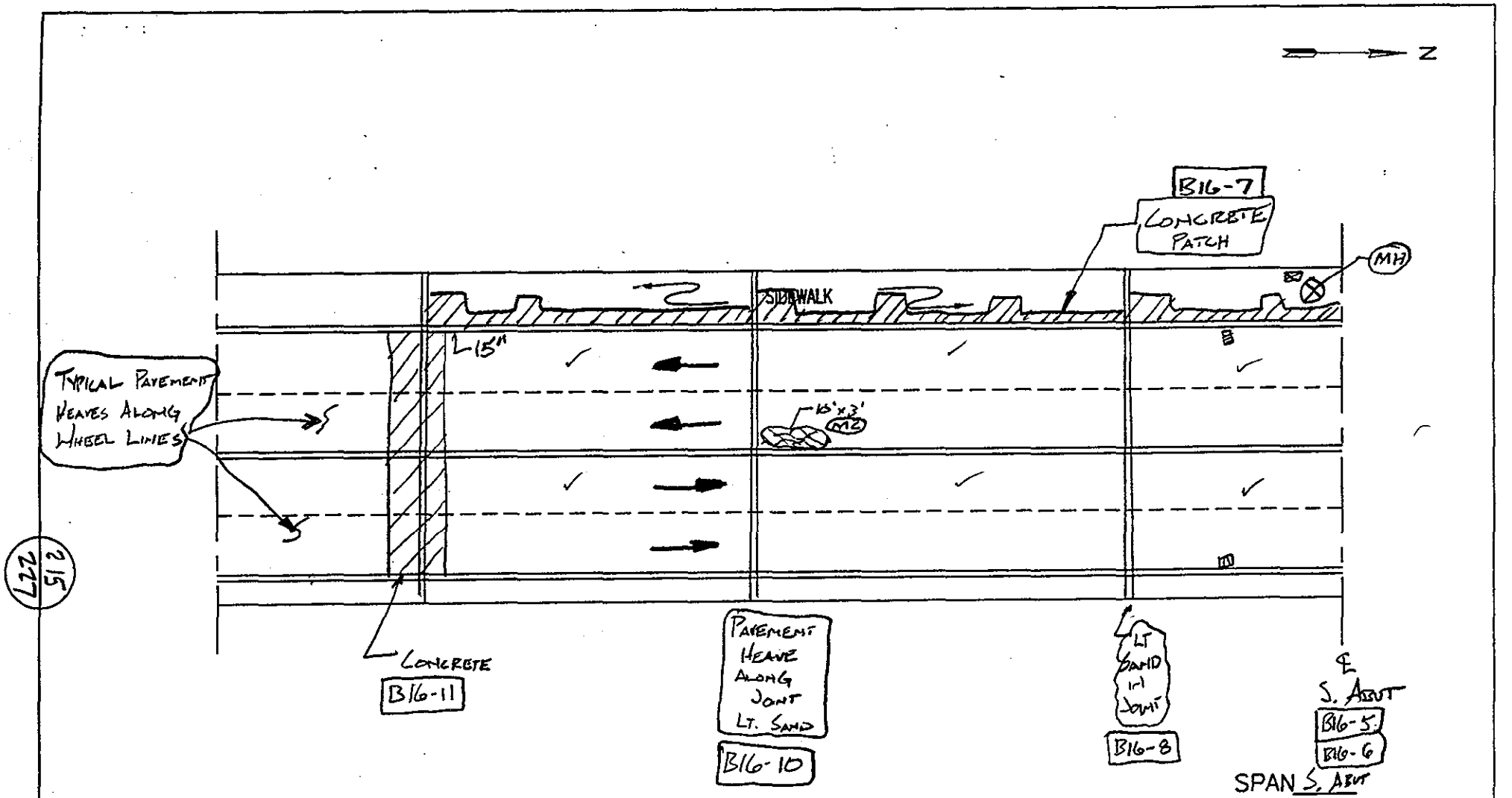

NOTES:

TOP OF DECK	
DEPARTMENT OF THE ARMY NEW ENGLAND DISTRICT CORPS OF ENGINEERS	
BOURNE HIGHWAY BRIDGE ROUTINE INSPECTION	
NOTES BY: LICHTENSTEIN CONSULTING ENGINEERS	
JOB #1986	DATE: 7/27/98
CREW:	SHEET 12 OF 14

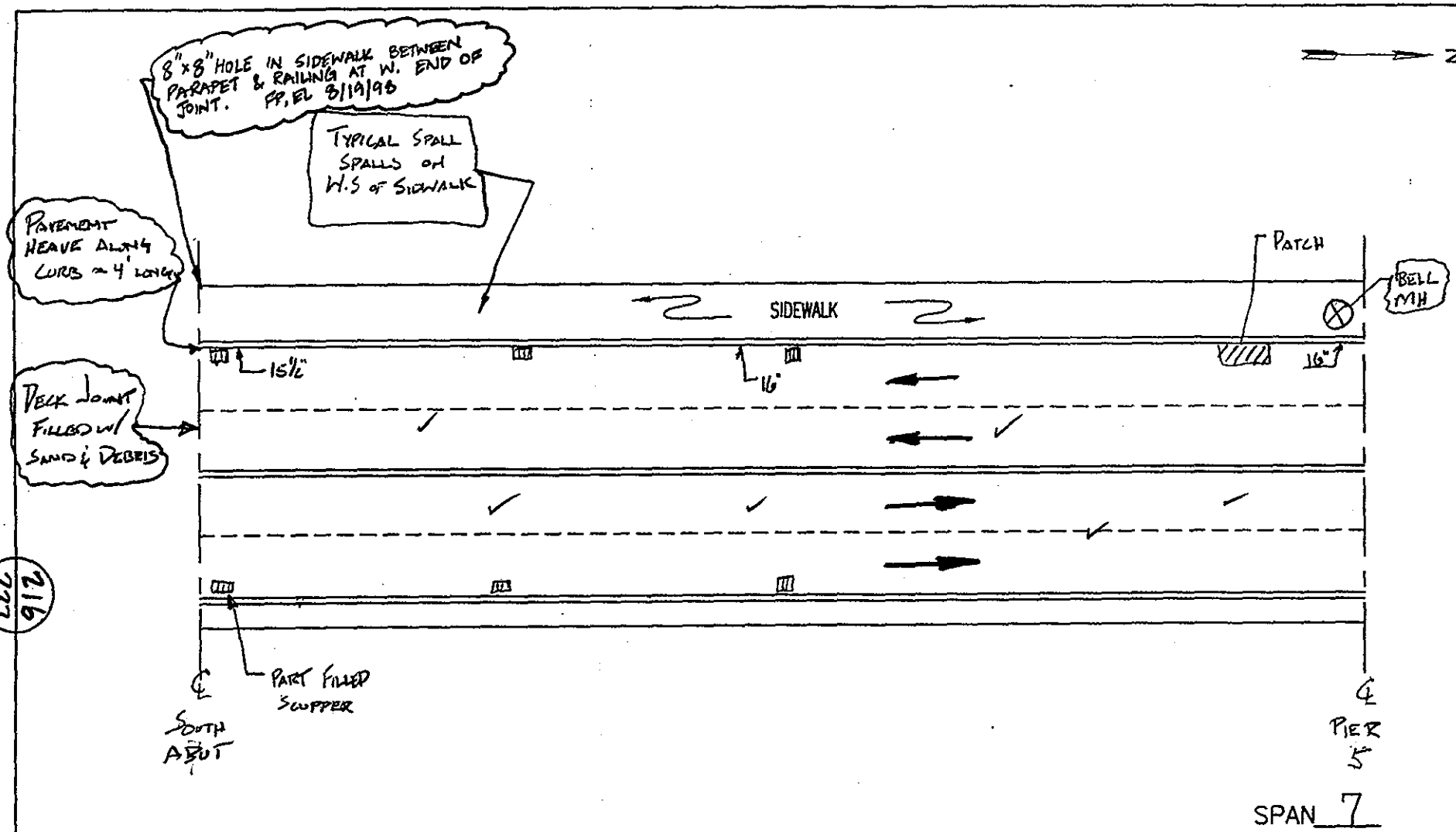

NOTES:

TOP OF DECK

DEPARTMENT OF THE ARMY
NEW ENGLAND DISTRICT CORPS OF ENGINEERS

BOURNE HIGHWAY BRIDGE
ROUTINE INSPECTION

NOTES BY: LICHTENSTEIN CONSULTING ENGINEERS (W²)

JOB #1986 | DATE: 7/27/93

CREW: W², PWL, SD, FP | SHEET 11 OF 14

216
227

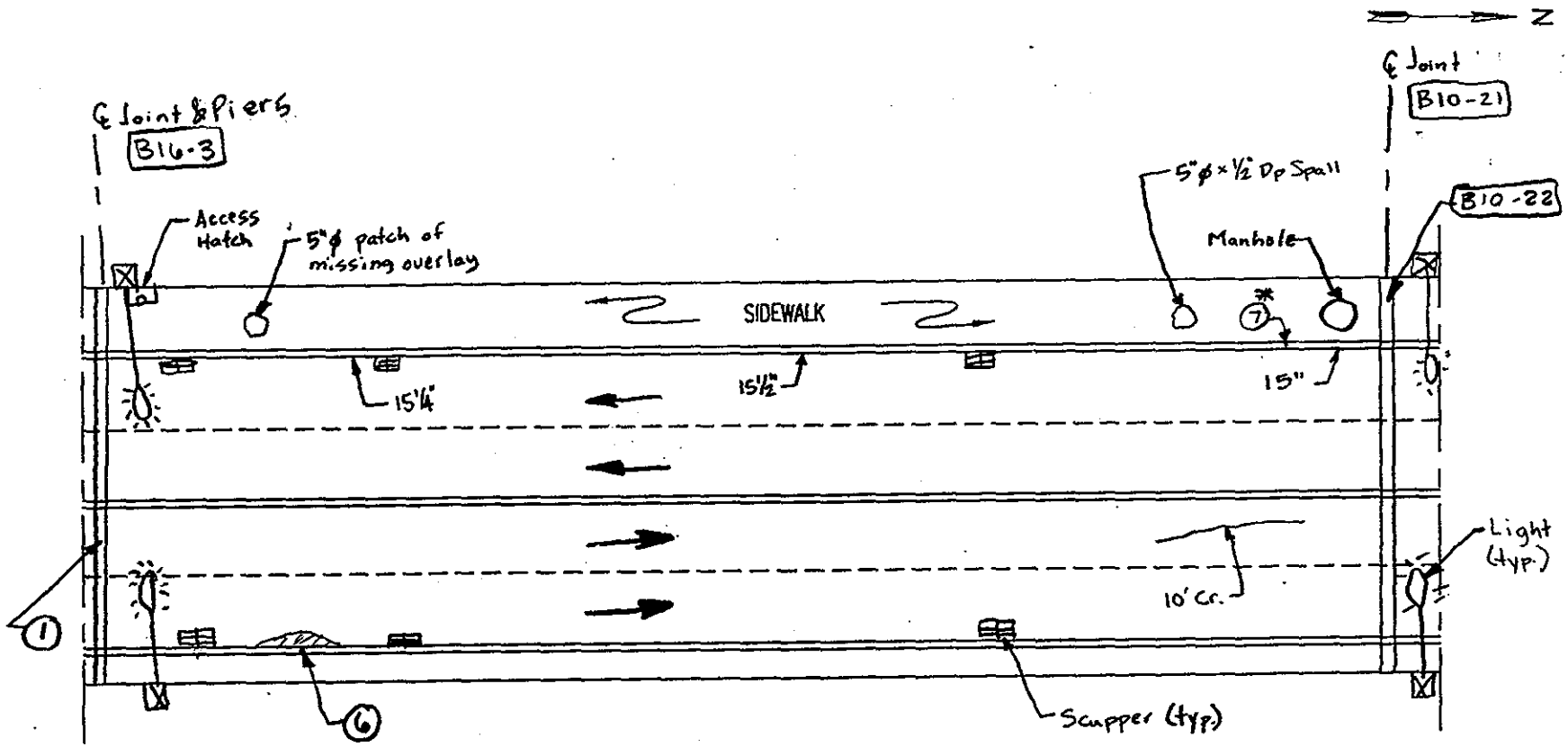

SPAN 5

NOTES:
1. Joint filled w/ Sand. Signs of movement noted under heavy LL.
2. Sidewalk overlay has isolated Areas of Concrete Showing.
3. Roadway wearing course in sat. Condition.
4. Railing has patches of med. heavy Rust.
5. Suicide fence is in sat Condition
6. Pavement is heaved at curb line for 6'. B16-2
*7. 2"L. x 1"W. x 3/4" DP. SPALL IN GRANITE CURB

* PP, EL 8/11/98

TOP OF DECK

DEPARTMENT OF THE ARMY
NEW ENGLAND DISTRICT CORPS OF ENGINEERS

BOURNE HIGHWAY BRIDGE
ROUTINE INSPECTION

NOTES BY: LICHTENSTEIN CONSULTING ENGINEERS

JOB #1986 | DATE: 7/27/98

CREW: SO, PWN, PP, W2 | SHEET 10 OF 14

227

TYP.: SIDEWALK WEARING SURFACE WORN EXPOSING CONCRETE BELOW. ≈ 1% OF SURFACE

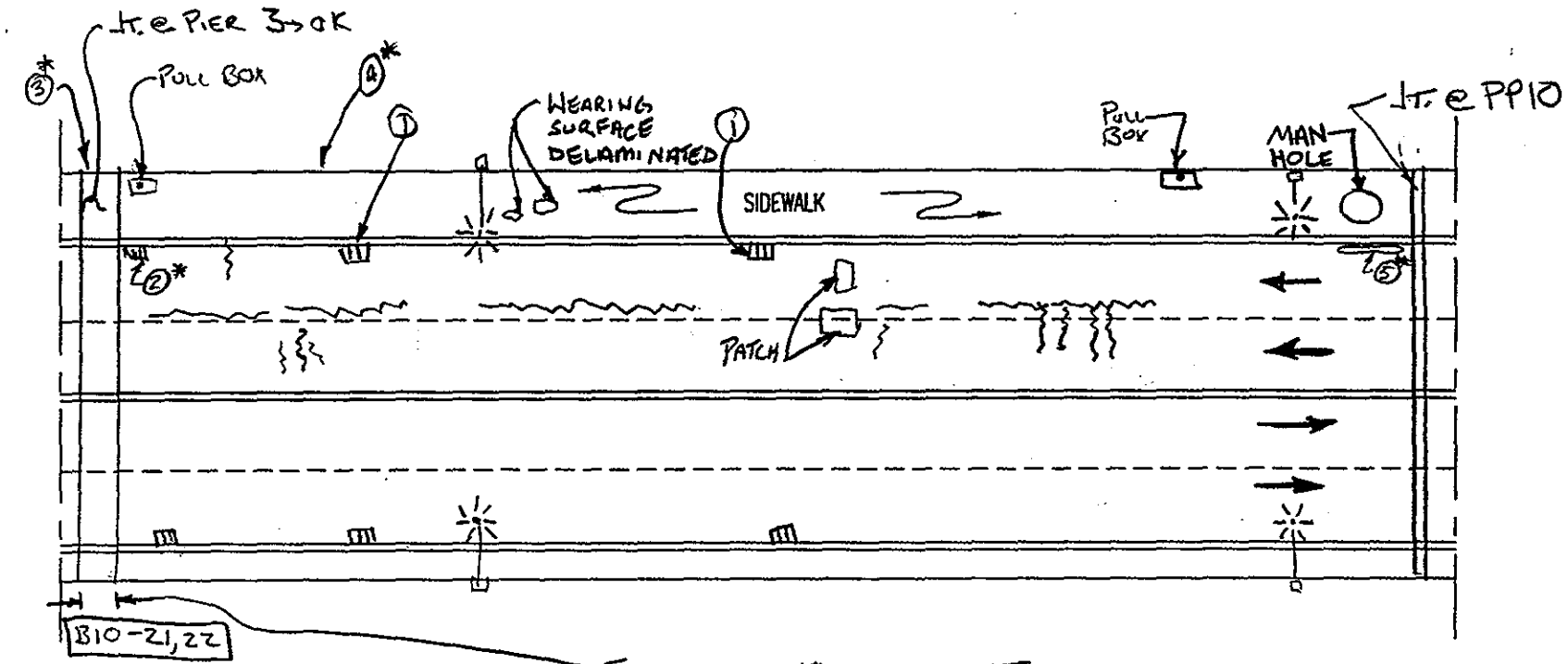

LEGEND:
~ PAVEMENT CRACKS

EXPANSION MEASUREMENT TAKEN @ SIDEWALK BETWEEN END PLATES: 33 5/16" @ 82° F

218
227

SPAN 3 B10-24

NOTES:
① SCUPPER GRATING PARTIALLY FILLED w/ DEBRIS – SCUPPER OK
②* CRACKED SCUPPER GRATE PARTIALLY FILLED W/ DEBRIS
③* RAILING EXPANSION ⊥ HOLED THROUGH, BELOW DECK LEVEL.
④* CRACKED TACK WELD IN CONNECTION OF FENCE VERTICAL ROD TO TOP RAIL.
⑤* 8" x 20' LONG PAVEMENT PATCH

* FP, EL 8/19/98

TOP OF DECK	
DEPARTMENT OF THE ARMY NEW ENGLAND DISTRICT CORPS OF ENGINEERS	
BOURNE HIGHWAY BRIDGE ROUTINE INSPECTION	
NOTES BY: LICHTENSTEIN CONSULTING ENGINEERS	
JOB #1986	DATE: 7/27/98
CREW: PWN FP WW SD	SHEET 9 OF 14

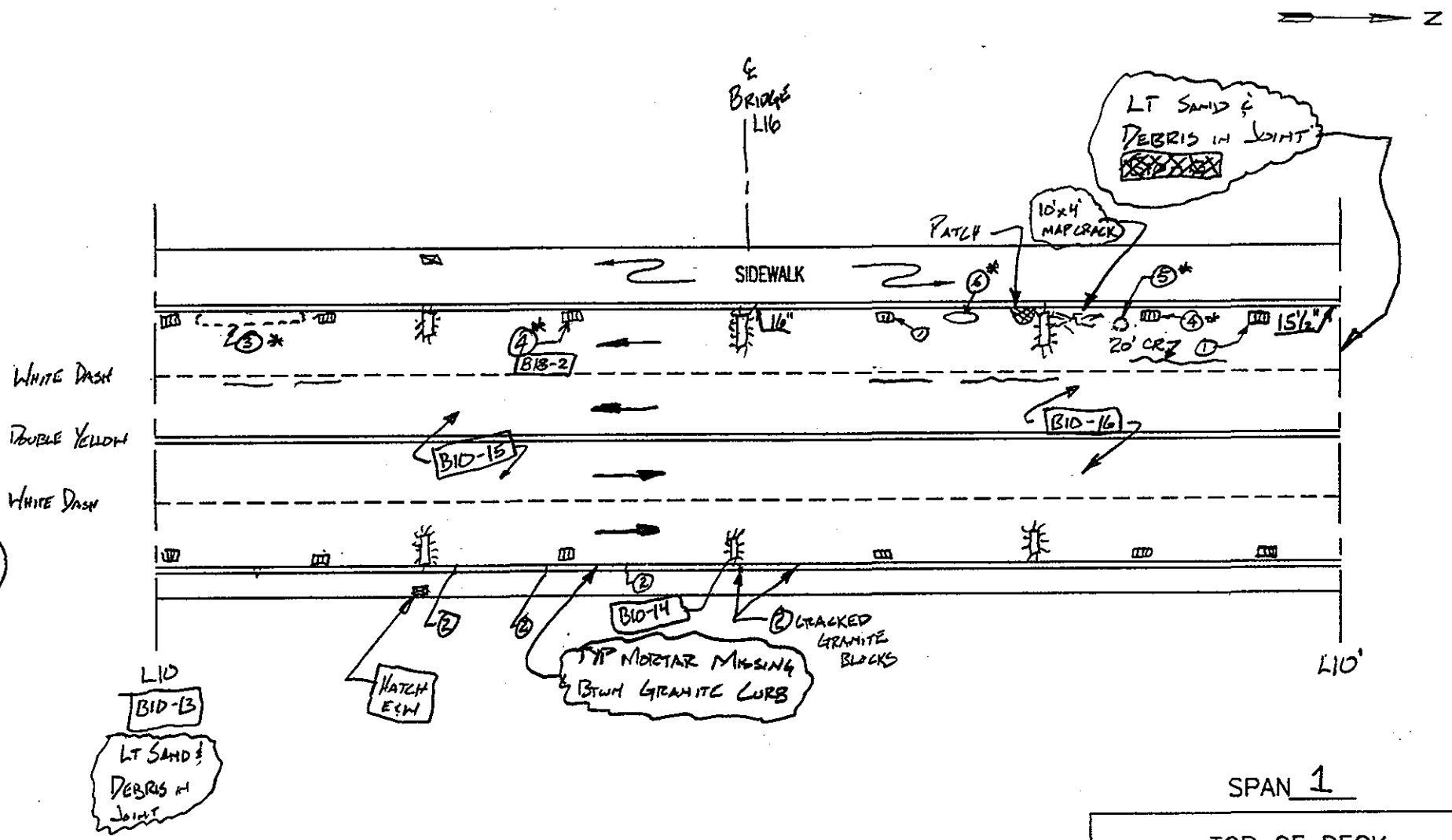

SPAN 1

NOTES:

1. PART. CLOGGED SCUPPER
2. CURB GRANITE STONE CRACKED
3. * 1' x 20' PAVEMENT PATCH HEAVING ALONG THE CURB
4. * CRACKED SCUPPER GRATE
5. * 1' DIA. BITUMINOUS PATCH
6. * 4' L x 1' W. BIT. PATCH WITH PAVEMENT HEAVE ALONG CURB

* FP, EL 8/19/98

TOP OF DECK

DEPARTMENT OF THE ARMY
NEW ENGLAND DISTRICT CORPS OF ENGINEERS

BOURNE HIGHWAY BRIDGE
ROUTINE INSPECTION

NOTES BY: LICHTENSTEIN CONSULTING ENGINEERS

JOB #1986 | DATE: 7/27/98

CREW: W, JD, KP, PHM | SHEET 8 OF 14

219 227

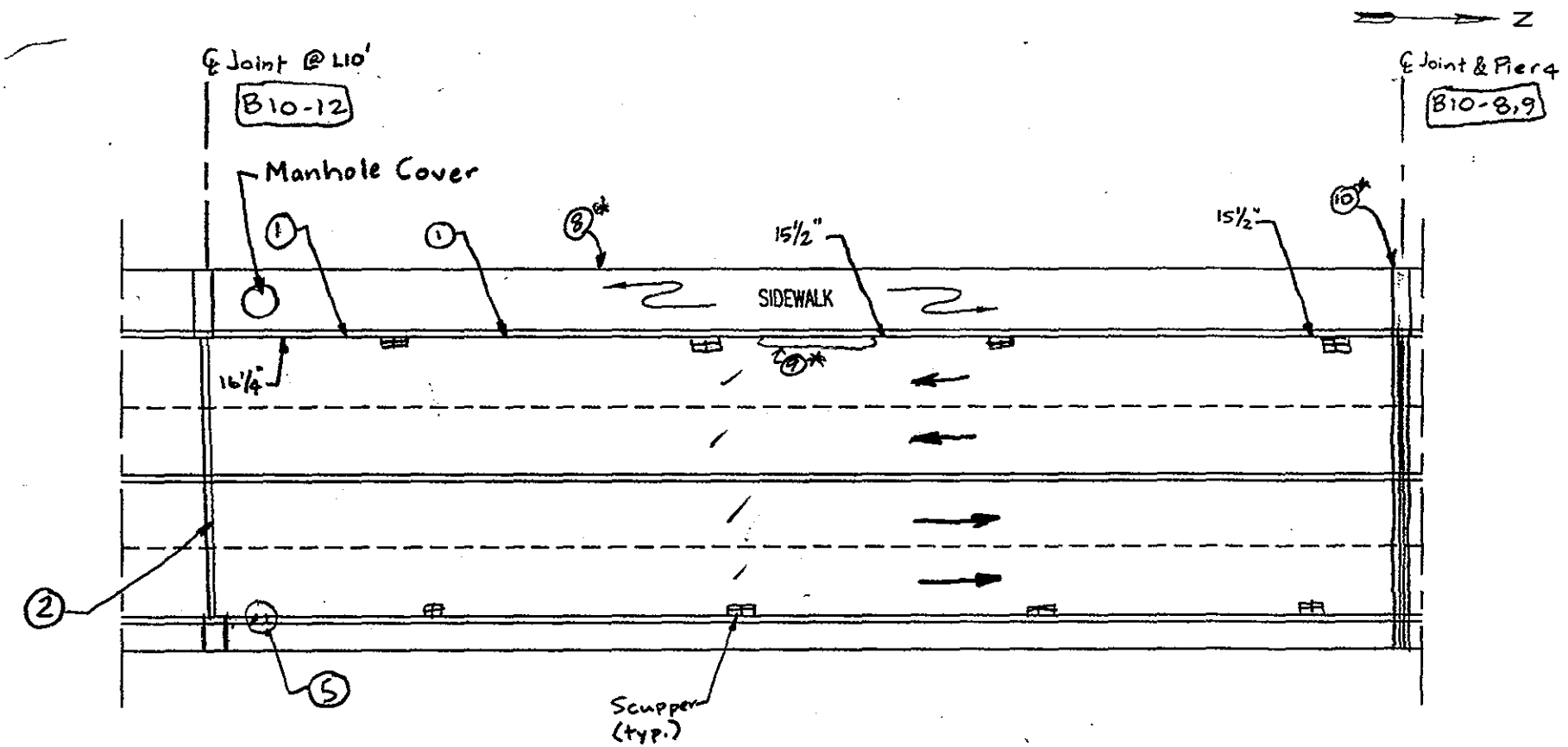

L22 / 220

10* 1½" DIA. CORROSION HOLE AT BOTTOM OF LIGHT STANDARD BASE, E. WEB ℄ 2" ABOVE SIDEWALK

SPAN 2

NOTES:
1. 8" × 6" × upto 3" Dp Spall in granite Curb B10-17
2. Joint filled w/ sand & Debris
3. Roadway wearing course in satisfactory Condition
4. Sidewalk overlay has isolated areas of Concrete showing.
5. F.H. Vert. Crack in Granite Curb
6. Railing has patches of med-heavy rust.
7. Suicide Fence in satisfactory Condition.
8* 1½" DIA. CORROSION HOLE IN LIGHT STANDARD BASE, S. WEB. B18-3
9* PAVEMENT HEAVE, ~ 20' LONG

*ED EL 8/19/98

TOP OF DECK

DEPARTMENT OF THE ARMY
NEW ENGLAND DISTRICT CORPS OF ENGINEERS

BOURNE HIGHWAY BRIDGE
ROUTINE INSPECTION

NOTES BY: LICHTENSTEIN CONSULTING ENGINEERS

JOB #1986 | DATE: 7/27/98

CREW: [illegible] | SHEET 7 OF 14

GENERAL NOTE: SIDEWALK WEARING SURFACE HAS WORN THROUGH, EXPOSING CONCRETE BELOW ≈ 1% OF TOTAL SURFACE B10-18

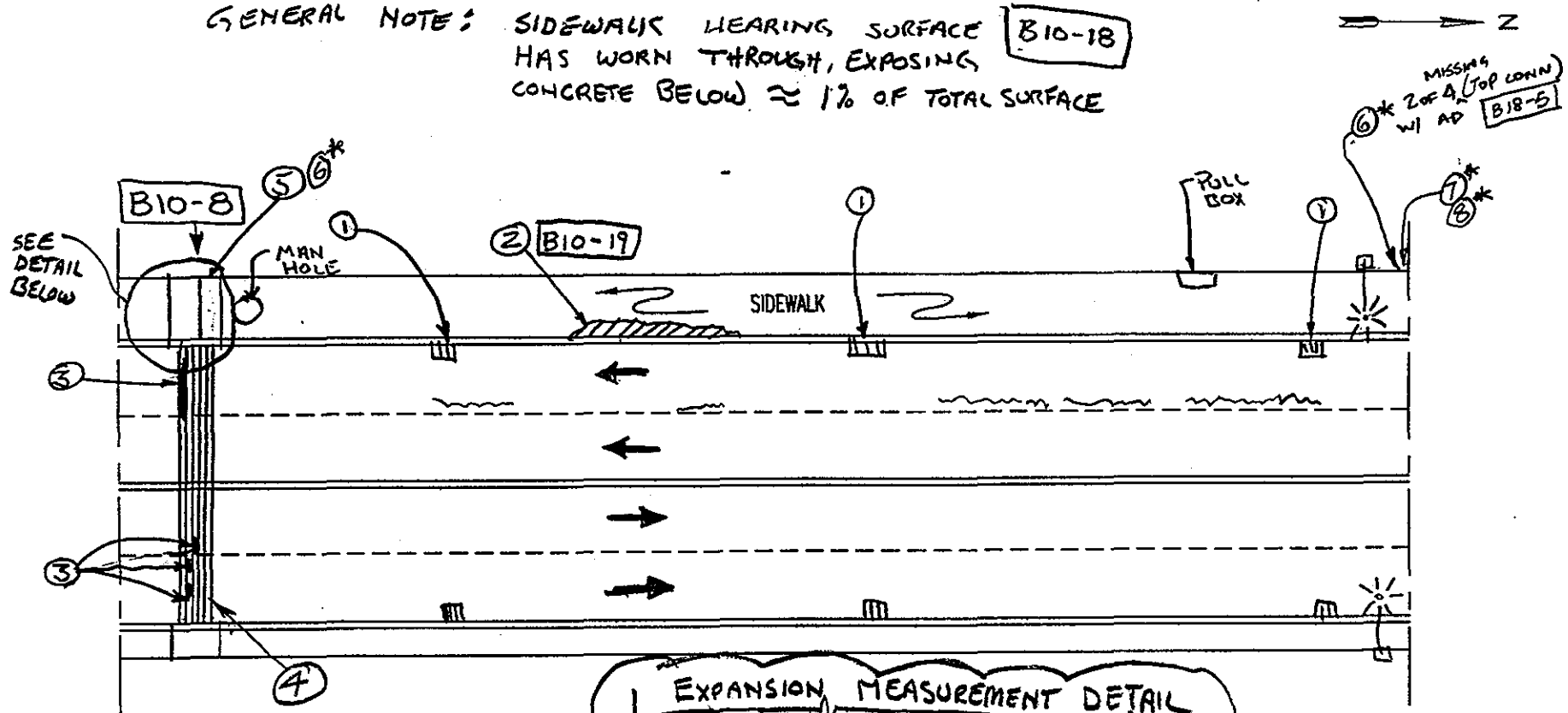

LEGEND:

} PAVEMENT CRACK

⑧* 1"φ HOLE IN EXPANSION PARAPET ℄ BEHIND FRONT ℄ OF LIGHT POST
4"φ HOLE IN EXP ℄, BELOW DECK LEVEL

NOTES:
1. SCUPPER GRATING PARTIALY FILLED W/ DEBRIS - SCUPPER OK
2. SIDEWALK WEARING SURFACE DELAMINATED & FILLING W/ SAND
3. COMPRESSION SEAL IS TORN
4. LIGHT SAND & DEBRIS FILLING JOINT
5. } 6"φ CORROSION HOLE IN EXPANSION PARAPET
   (*2" H. x 20" W. CORROSION HOLE IN EXPANSION PARAPET ℄, BELOW DECK LEVEL.
6. * MISSING NUTS ON ANTI MISSILE FENCE CONN. TO PARAPET (3 OF 4 MISSING ON TOP CONN. B18-4, MIN. 2 OF 4 MISSING ON BOT CONN.)
7. * BROKEN WELD AT BOT CONN. OF FENCE VERT. ROD TO RAILING

* FP, EL, 8/19/98

SPAN 4

TOP OF DECK

DEPARTMENT OF THE ARMY
NEW ENGLAND DISTRICT CORPS OF ENGINEERS

BOURNE HIGHWAY BRIDGE
ROUTINE INSPECTION

NOTES BY: LICHTENSTEIN
CONSULTING ENGINEERS

JOB #1986 | DATE: 7/27/98
CREW: PWN WW SD FP | SHEET 6 OF 14

227

⊠ Scupper drain

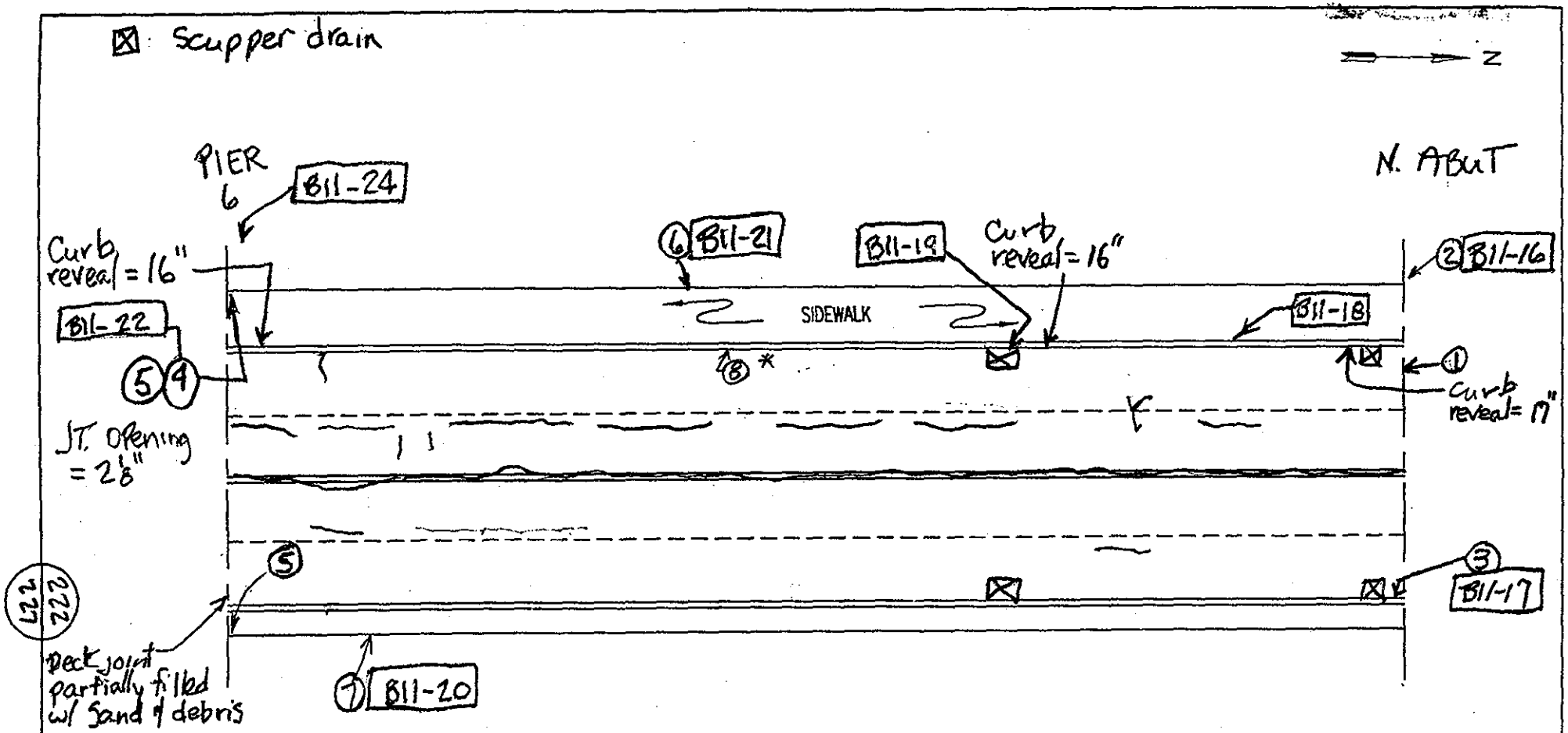

- Asphalt overlay on sidewalk has isolated small spalls & cracks
- Bridge rail has random areas of heavy rust.
- Scupper drains partially plugged w/ debris

EL

NOTES:

1. Joint covered w/ sealant
2. 8" x 8" hole btwn parapet & railing @ W. end of deck joint
3. 8" Pitting over 15% of E. face of steel endpost & hvy rust w/ 3" ⌀ x 24" → hole @ bottom
4. 3" ⌀ hole w/ hvy rust around it in vertical railpost exp pl, 6" below sidewalk level
5. Areas of hvy rust on rail post
6. Crack in weld btwn fence vertical rod & top L of bridge rail
7. Bent Vert. rod in fence
8. * 3" x 3" x 1" CORNER SPALL IN GRANITE CURB

*FP, EL 8/19/98

SPAN 6

TOP OF DECK

DEPARTMENT OF THE ARMY
NEW ENGLAND DISTRICT CORPS OF ENGINEERS

BOURNE HIGHWAY BRIDGE
ROUTINE INSPECTION

NOTES BY: LICHTENSTEIN
CONSULTING ENGINEERS

JOB #1986 | DATE: 7.15.98

CREW: EL | SHEET 2 OF 2

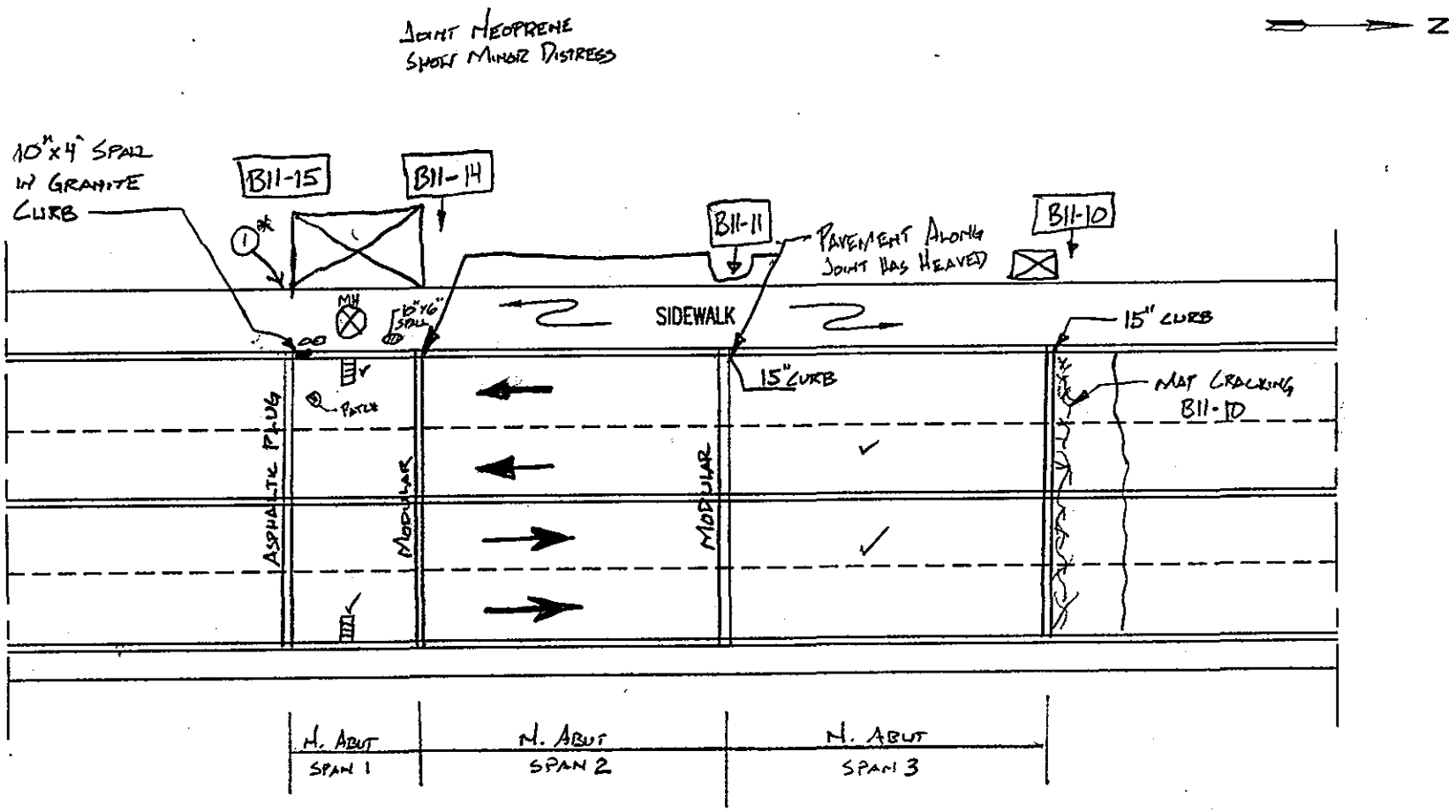

SPAN N. ABUT

EL

NOTES:

TYP. NOTE: THIN COAT OF ASPHALT OVERLAY ON SIDEWALKS HAS ISOLATED SMALL DIAMETER SPALLS

① * 1½" DIA. HOLE IN EXP. PARAPET ℄, AT BOTTOM.

* FP, EL 8/19/98

TOP OF DECK

DEPARTMENT OF THE ARMY
NEW ENGLAND DISTRICT CORPS OF ENGINEERS

BOURNE HIGHWAY BRIDGE
ROUTINE INSPECTION

NOTES BY: LICHTENSTEIN
CONSULTING ENGINEERS

JOB #1986 | DATE: 7/16/98

CREW: WW, SD | SHEET 6 OF 8

TYP. CNDN. - LIGHT SCALING ON ALL CONCRETE SURFACES

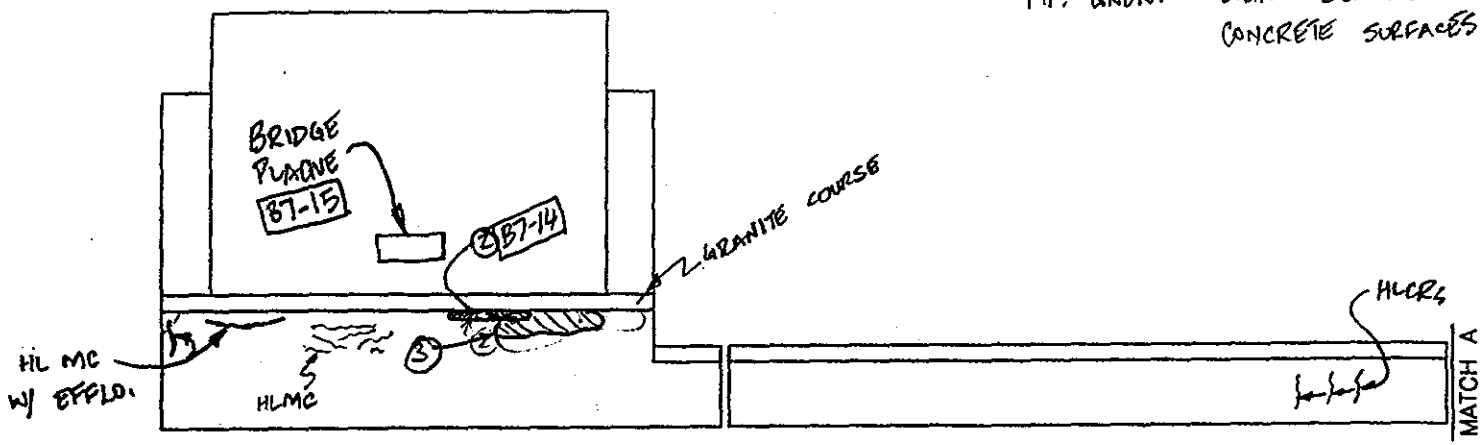

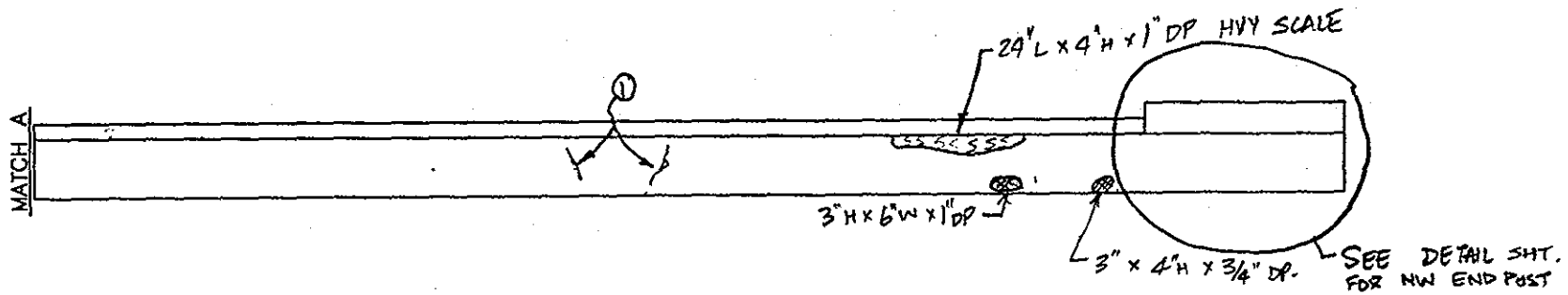

E ELEVATION NW PARAPET

EL

NOTES: ① HL CR W/ RUST STAINS

② 15"L x 1"H x 8" DP SPALL IN LEVELLING GROUT BELOW GRANITE COURSE B7-14

③ 4' L. x 6" H. HOLLOW SOUNDING AREA W/ HL MC & EFFLO.

TOP OF DECK	
DEPARTMENT OF THE ARMY NEW ENGLAND DISTRICT CORPS OF ENGINEERS	
BOURNE HIGHWAY BRIDGE ROUTINE INSPECTION	
NOTES BY: LICHTENSTEIN CONSULTING ENGINEERS	
JOB #1986	DATE: 7/16/98
CREW: [illegible]	SHEET 4 OF 6

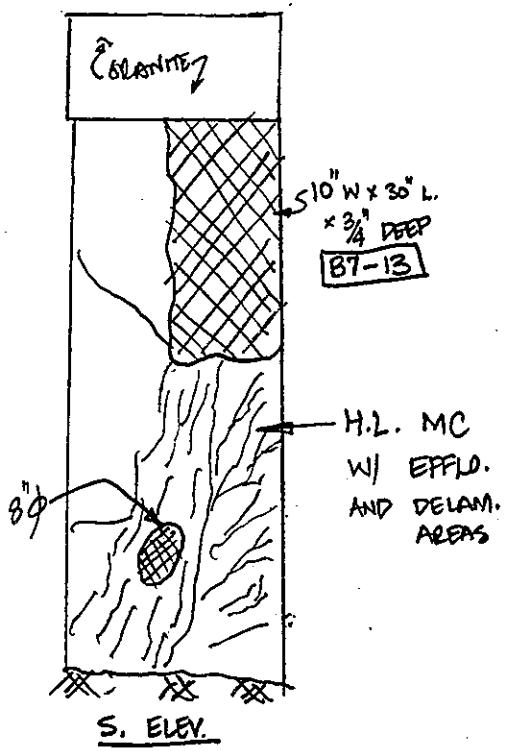

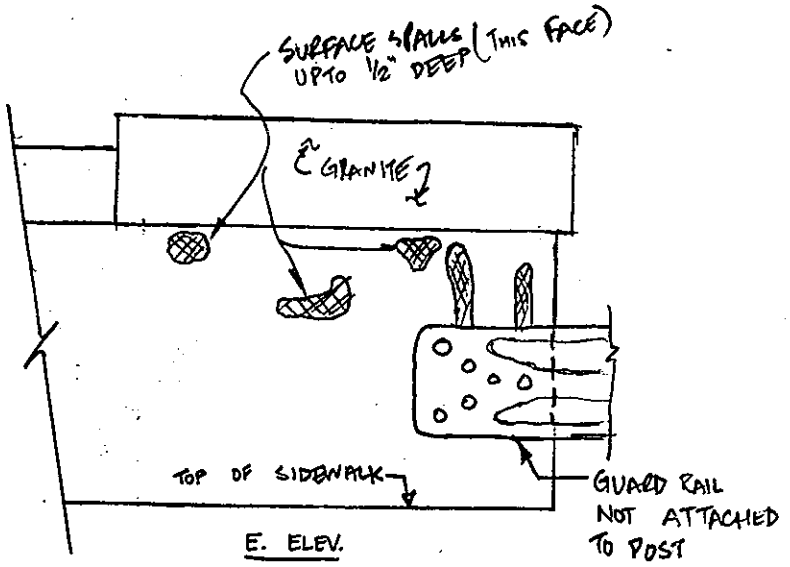

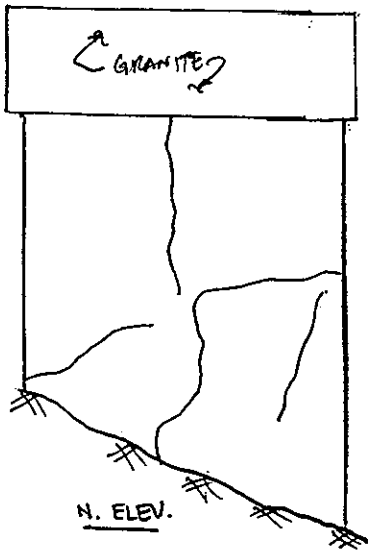

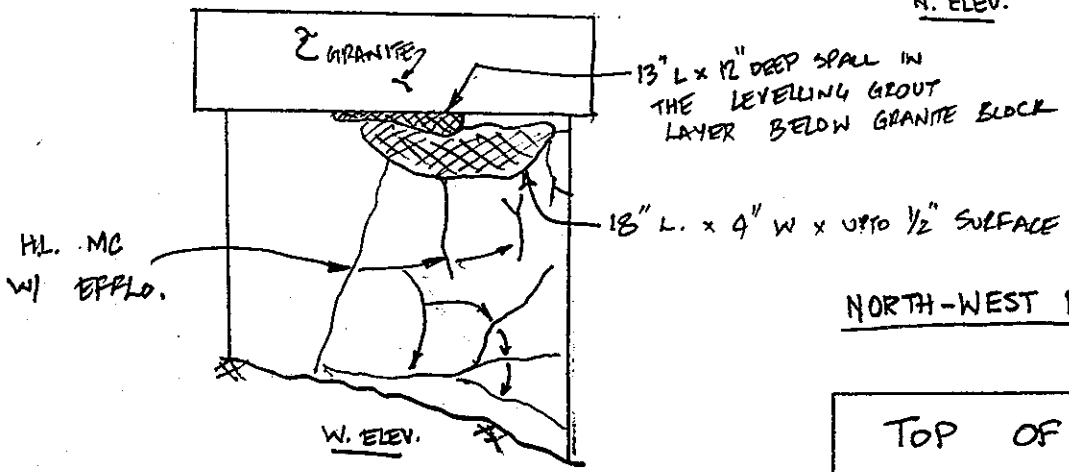

NORTH-WEST PARAPET END POST

225
227

EL
NOTES:

TOP OF DECK	
DEPARTMENT OF THE ARMY NEW ENGLAND DISTRICT CORPS OF ENGINEERS	
BOURNE HIGHWAY BRIDGE ROUTINE INSPECTION	
NOTES BY: LICHTENSTEIN CONSULTING ENGINEERS	
JOB #1986	DATE: 7/16/98
CREW: FP, PWN	SHEET 5 OF 10

TYP. CONDN.: LIGHT SCALING ON ALL CONCRETE SURFACES

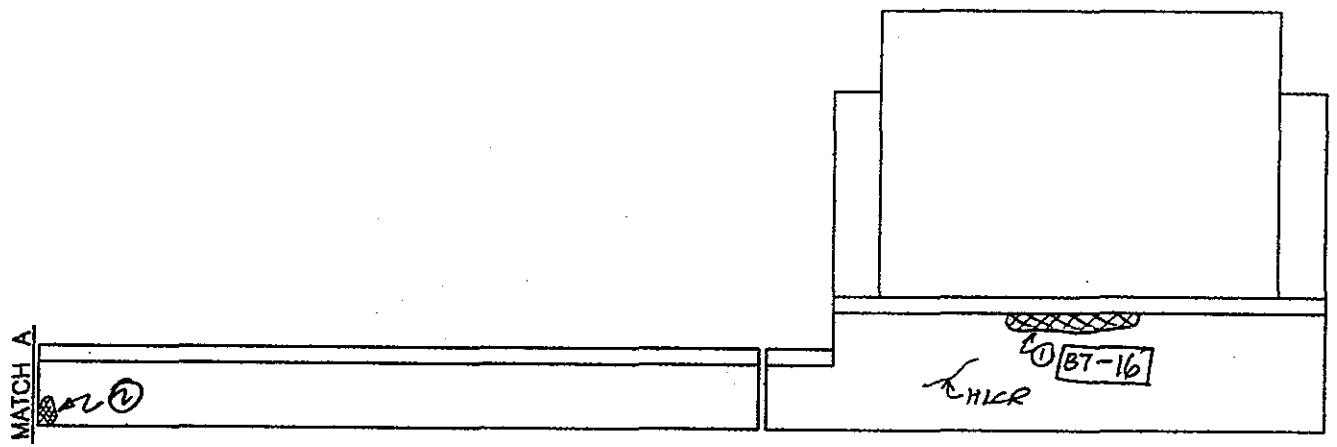

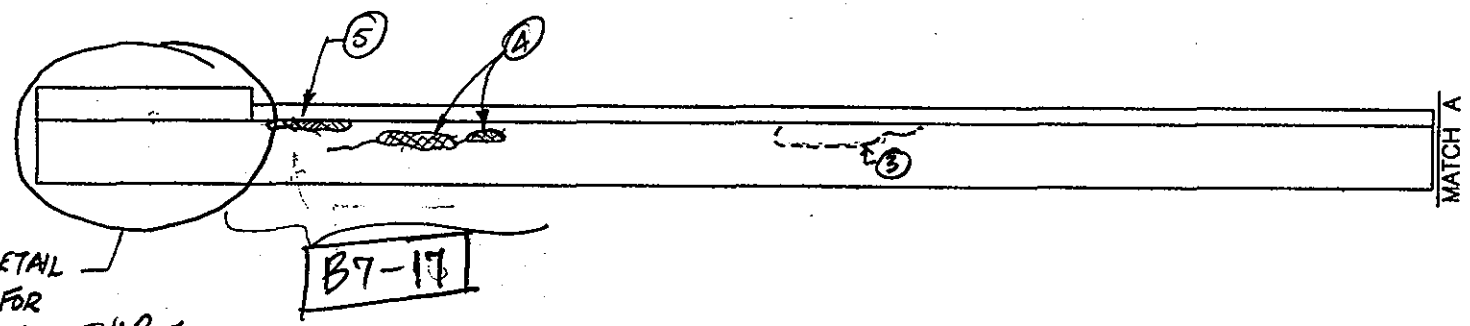

SEE DETAIL SHEET FOR NE PARAPET ENDPOST

W ELEVATION NE PARAPET

NOTES:
1. 6' L. x 7" W x UP TO 3" DEEP SPALL W/ EFFLO ALONG BOT. EDGE
2. 4" W. x 9" H x 3/4" DEEP SPALL
3. 3' L. x 6" H PATCHED AREA BEGINNING TO SPALL
4. 4' L x 6" H SPALL 1" DP.
5. 4' L x 1" H SPALLED LEVELLING GROUT

TOP OF DECK

DEPARTMENT OF THE ARMY
NEW ENGLAND DISTRICT CORPS OF ENGINEERS

BOURNE HIGHWAY BRIDGE
ROUTINE INSPECTION

NOTES BY: LICHTENSTEIN CONSULTING ENGINEERS

JOB #1986 | DATE: 7/16/98

CREW: FP, PWN | SHEET 6 OF 10

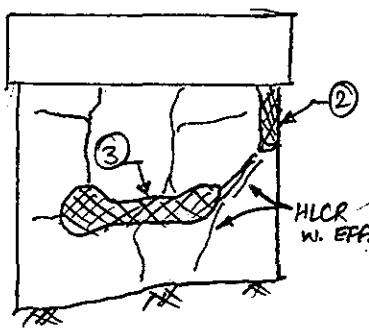

N. ELEV.

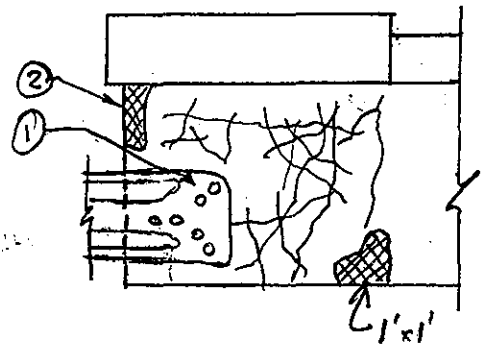

W. ELEV.

B7-17

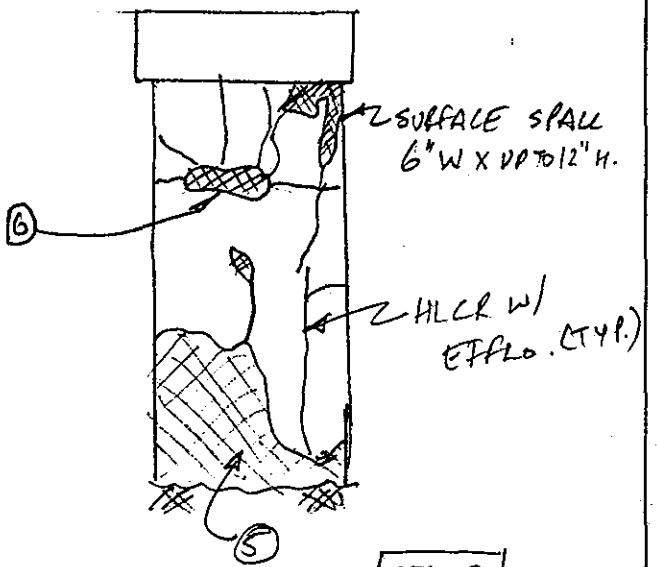

S. ELEV

B7-18

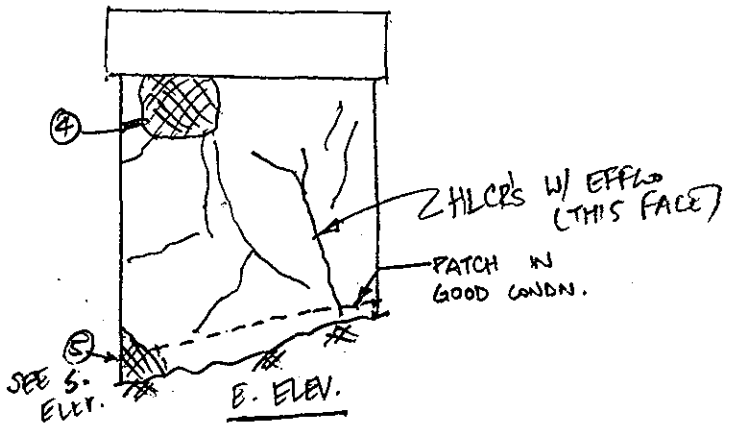

E. ELEV.

NE PARAPET ENDPOST

EL

NOTES:
1. STEEL W-SHAPED RAIL NOT CONNECTED TO POST
2. 14"H. x 5"W x 3" DP. CORNER SPALL
3. 2'L. x 7"H. x 1/2" DP SPALL
4. 8" x 8" x 3/8" DP SURFACE SPALL
5. 18" x 18" x 2" DP SPALL
6. 10"L. X 2'H x 3/8" DP. SPALL

TOP OF DECK

DEPARTMENT OF THE ARMY
NEW ENGLAND DISTRICT CORPS OF ENGINEERS

BOURNE HIGHWAY BRIDGE
ROUTINE INSPECTION

NOTES BY: LICHTENSTEIN
CONSULTING ENGINEERS

JOB #1986 | DATE: 7/16/98

CREW: FP, PWN | SHEET 7 OF 10