CONNECTICUT RIVER FLOOD CONTROL

OPERATION AND MAINTENANCE MANUAL

FOR

FLOOD PROTECTIVE WORKS

WEST SPRINGFIELD, MASS.

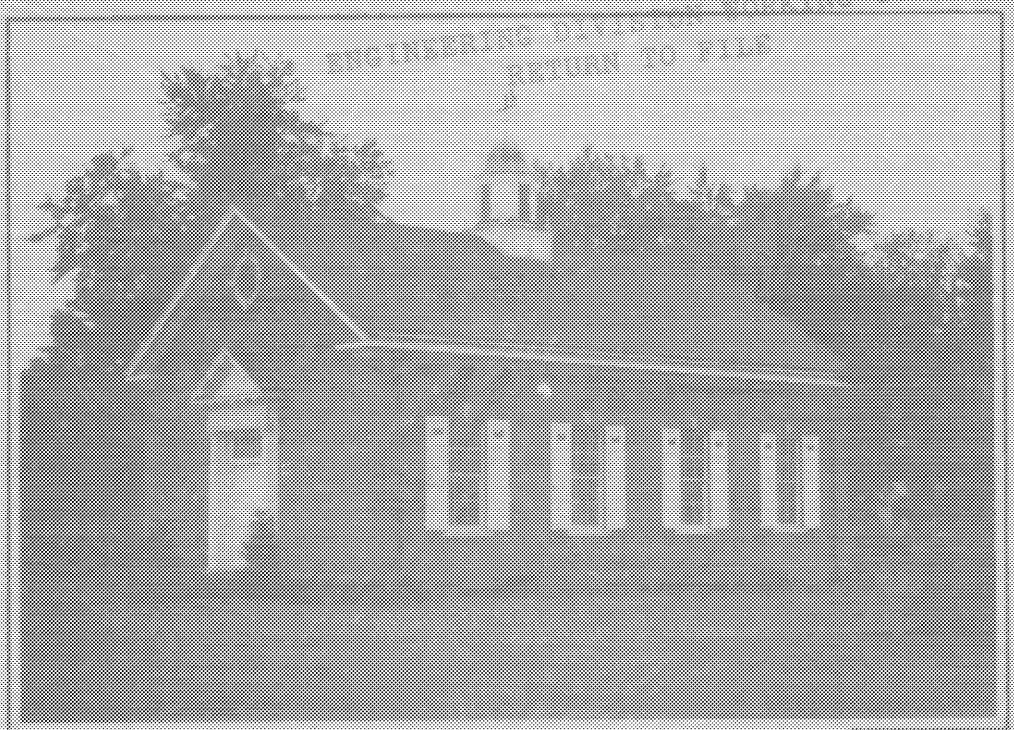

WARREN STREET PUMPING STATION

CORPS OF ENGINEERS, U. S. ARMY

OFFICE OF THE DIVISION ENGINEER

NEW ENGLAND DIVISION, BOSTON, MASSACHUSETTS

JANUARY 1951

OPERATION AND MAINTENANCE MANUAL

FOR

FLOOD PROTECTIVE WORKS

AT

WEST SPRINGFIELD, MASSACHUSETTS

CORPS OF ENGINEERS
U. S. ARMY

OFFICE OF THE DIVISION ENGINEER
NEW ENGLAND DIVISION
BOSTON, MASSACHUSETTS

JANUARY 1951

OPERATION AND MAINTENANCE MANUAL

FLOOD PROTECTIVE WORKS

WEST SPRINGFIELD, MASSACHUSETTS

FOREWORD

The successful functioning of a flood protection system is not assured by construction of an adequate system of dikes, walls and pumping plants. If the system is to perform its function it must be carefully maintained during periods of normal river stages and properly operated during flood periods.

The need for proper maintenance cannot be too highly stressed in view of the fact that large damages may be incurred through failure of a critical element in flood time, caused by deterioration or damage that would have been eliminated by proper maintenance.

Necessary maintenance and proper operation require that responsible local persons have a thorough understanding of the functions of the various units of the system and the best methods of maintaining the system and operating it during flood emergencies. It is the purpose of this manual to provide complete information so that all parties may know their responsibilities in maintaining and operating the flood protection system in accordance with the regulations prescribed by the Secretary of the Army so as to obtain maximum benefits. Maintenance and operation shall be provided in strict accordance with the regulations prescribed by the Secretary of the Army as amplified by this manual.

OPERATION AND MAINTENANCE MANUAL

FLOOD PROTECTIVE WORKS

WEST SPRINGFIELD, MASS.

TABLE OF CONTENTS

Paragraph No.	Title	Page No.
	SECTION I. GENERAL	
1-01	Introduction	1
1-02	Authorization	1
1-03	Location	1
1-04	Dates of Construction	2
	SECTION II. LOCAL COOPERATION REQUIREMENTS	
2-01	Flood Control Acts	4
2-02	Assurances	4
	SECTION III. GENERAL REGULATIONS	
3-01	Purpose of this Manual	6
3-02	General Rules and Regulations	6
3-03	Maintenance	9
3-04	Operation	9
3-05	Reports	10
	SECTION IV. DIKES	
4-01	Description	12
4-02	Maintenance	12
4-03	Operation	15
4-04	Emergency Repair Methods	17
	SECTION V. FLOOD WALLS	
5-01	Description	22
5-02	Maintenance	22
5-03	Operation	23
5-04	Emergency Repair Methods	23
	SECTION VI. CLOSURE STRUCTURES	
6-01	Description	24
6-02	Maintenance	25
6-03	Operation	25

TABLE OF CONTENTS (Cont'd)

Paragraph No.	Title	Page No.
	SECTION VII. OPENINGS THROUGH THE PROTECTIVE WORKS	
7-01	Description	28
7-02	Maintenance	29
7-03	Operation	30
	SECTION VIII. PUMPING STATIONS	
8-01	Description	35
8-02	List of Principal Equipment and Name Plate Data	43
8-03	Maintenance	47
8-04	Operation	53
	SECTION IX. DRAWINGS AND SPECIFICATIONS	
9-01	Drawings and Specifications	71

A P P E N D I C E S

APPENDIX "A"

REGULATIONS PRESCRIBED BY THE SECRETARY OF THE ARMY

APPENDIX "B"

ASSURANCES OF LOCAL COOPERATION

APPENDIX "C"

INSPECTION REPORT FORMS

APPENDIX "D"

DRAWINGS

SECTION I

GENERAL

HJK Copy

1-01. INTRODUCTION. - The greatest Connecticut River flood of record, that of March 1936, overtopped the dikes in West Springfield by about six feet and inundated the thickly-settled business and residential area in the southerly portion of the Town. These dikes, which were constructed by local interests, extended generally from North End Bridge on the Connecticut River to high ground above Agawam Bridge on the Westfield River and were approximately equal in elevation to the 1927 high water. The construction program of the Department of the Army in West Springfield, beginning in fiscal year 1937 and continuing intermittently to date, has in effect supplanted the Town dikes by enlarged and modernized local protective works, intended to protect substantially the same area against a design flood, greater than any of record, as modified by a comprehensive reservoir system. Local protection has also been extended to include a contiguous area to the north, known as the Riverdale section. Construction of the Riverdale Dike was completed in 1949.

1-02. AUTHORIZATION. - a. WEST SPRINGFIELD DIKE. Work was initiated in fiscal year 1937 under the provisions of the Emergency Relief Appropriation Act of June 22, 1936. Funds available were sufficient for the raising of the line of protection to an elevation slightly above the 1936 flood-line throughout the existing system except that no work was done on the section of dike on the Westfield River extending 6100 feet downstream from Agawam Bridge. This section was brought to design grade in fiscal year 1938 under the provisions of the Emergency Relief Appropriation Act of June 29, 1937. The balance of the dike system was raised to design grade under authorization of the Flood Control Act approved June 28, 1938 (Public No. 761 - 75th Congress) (H. Doc. 455, 75th Congress, 2d Session) and modified by the Flood Control Act of August 18, 1941 (Public No. 228, 77th Congress) (H. Doc. 653, 76th Congress, 3d Session). This authorization also covers a foundation treatment to a section of the dike extending about 6100 feet along the Westfield River downstream of the Agawam Bridge. The foundation treatment included the installation of seepage relief wells, and a drainage system at the landside toe of dike and partial sheet pile cut-offs at two locations at the riverside toe of the dike.

b. RIVERDALE DIKE. This project was included in the Second Interim Report on the control of floods in the Connecticut River Basin which has been published as House Document 724, 76th Congress, 3d Session. It was approved by the Flood Control Act of 18 August 1941 (Public No. 228, 77th Congress, 1st Session).

1-03. LOCATION. - The location of the dikes is shown on Plate V.

a. WEST SPRINGFIELD DIKE. The northerly end of this project is on the west bank of the Connecticut River at River Mile 78. From this point the project runs southerly about two miles to the

Revised Dec 1953

confluence of the Connecticut and Westfield Rivers, thence westerly and northerly along the Westfield River for nearly three miles.

b. RIVERDALE DIKE. This dike extends from high ground on the south bank of Goldine Brook to high ground on the north bank of Bagg Brook, a distance of 12,900 feet.

1-04. DATES OF CONSTRUCTION. - a. WEST SPRINGFIELD DIKE. The original dikes in West Springfield were constructed by local interests. In March 1936, when the major flood of record occurred, they offered protection only to the approximate elevation of the 1927 high water and consequently were damaged and overtopped.

Between September 1936 and June 1937 the dikes were strengthened and enlarged by the Corps of Engineers, certain portions being replaced by concrete flood walls. The new protection was built to an elevation equal to or slightly above the flood of 1936. No work was done in the dike area immediately below Agawam Bridge for a length of 6100 feet. This section was enlarged in the Fall of 1937 and the Spring of 1938 and was the first section brought to project grade, an elevation which will protect against the design flood, a flood greater than any of record, modified by the comprehensive reservoir system.

The high water of September 1938 was met, therefore, by a system of dikes and walls at an elevation at least equal to the 1936 flood level and extending from high ground 2400 feet above North End Bridge along the Connecticut River and the Westfield River to high ground above Agawam Bridge near the Boston and Albany Railroad overpass at River Street. Reaching an elevation only 3 feet below the major flood of record, it severely tested the dike system, and afforded an opportunity for observation of inherent weaknesses.

In the Spring of 1939 the Corps of Engineers began a program of strengthening and enlarging the entire local protection system. A foundation treatment to a section of dike extending downstream from Agawam bridge was completed during the 1947 construction season. Installation of additional relief wells and enlarging the drainage system to this section of dike was completed in 1953.

In general, all earth dikes are now at project grade; concrete flood walls built in 1936-1937 remain at an elevation slightly above that of the 1936 flood and, correspondingly, slightly below project grade; the concrete walls built during and after 1939 are at project grade. Pumping stations have been built by the Government and are operative at the three major sewage outfalls.

Revised Dec 1953

The outfalls from a small pumping station built by the Town drain through the dike in the vicinity of the Agawam bridge. The largest outfall is provided with a flap valve on the river side of the dike and a sluice gate on the land side. All other drains from the protected areas to the rivers are gated for closure during high-water period. A complete line of protection to the elevation of the 1936 flood is now available without necessity for sandbag extensions.

b. RIVERDALE DIKE. This project consists of an earth dike, three highway closure structures and two pumping stations. Construction was begun in April 1949 and completed in June 1950.

Revised Dec 1953

SECTION II

LOCAL COOPERATION REQUIREMENTS

2-01. FLOOD CONTROL ACTS. - The Flood Control Act approved June 22, 1936 (Public No. 738, 74th Congress) provides, "That hereafter no money appropriated under authority of this Act shall be expended on the construction of any project until States, political subdivisions thereof, or other responsible local agencies have given assurances satisfactory to the Secretary of War that they will:

"(a) Provide without cost to the United States all lands, easements, and rights-of-way necessary for the construction of the project;

"(b) Hold and save the United States free from damages due to the construction works, and;

"(c) Maintain and operate all the works after completion in accordance with regulations prescribed by the Secretary of War."

The Flood Control Acts approved June 28, 1938 (Public Law No. 761, 75th Congress) and August 18, 1941 (Public Law 228, 77th Congress) which provided authorization for the flood protection works in West Springfield, Massachusetts stated that the above provisions (a), (b), and (c) would still apply.

2-02. ASSURANCES. a. WEST SPRINGFIELD DIKE. The initial work by the Corps of Engineers of enlarging and strengthening this unit of flood protection was performed in 1936 to 1938 inclusive, under provisions of the Emergency Relief Acts of June 22, 1936, June 29, 1937, and June 21, 1938. The existing project was authorized by the Flood Control Act approved June 28, 1938.

Assurances were furnished the Secretary of the Army as shown below:

Project Unit	Assurances Dated	Approved by Secretary of Army
1937 Const.	Sept. 17, 1936	Sept. 25, 1936
W.S. 1	Dec. 19, 1938	Feb. 20, 1939
W.S. 2 and 3	May 4, 1939	May 23, 1939
W.S. 4	Feb. 6, 1941	Mar. 31, 1941
W.S. 5	Oct. 17, 1939	Jan. 31, 1940
W.S. 6	Jan. 24, 1939	Feb. 28, 1939

b. RIVERDALE DIKE. This project was authorized by the Flood Control Act approved August 18, 1941. Assurances dated Jan. 10, 1946 were approved by the Secretary of the Army on February 28, 1946.

A copy of these assurances is given in Appendix B of this manual.

SECTION III

GENERAL REGULATIONS

NOTE: Attention is invited to the fact that where reference is made to "District Engineer" in the published Regulations, "Division Engineer" should be substituted therefor in all cases within the New England Division, Corps of Engineers.

3-01. PURPOSE OF THIS MANUAL. - The purpose of this manual is to present detailed information to be used as a guide in complying with "Flood Control Regulations - Maintenance and Operation of Flood Control Works" as approved by the Acting Secretary of War on 9 August 1944, and published in the Federal Register on 17 August 1944, a copy of which is bound in the back of this volume as Appendix A. In executing assurances of local cooperation for the West Springfield project, the town has agreed to maintain and operate the completed works in accordance with those regulations. The Regulations are intended to cover all local protection projects constructed by the Department throughout the United States, are general in nature, and obviously cannot give detailed instructions for the maintenance and operation of a specific project. The details set forth in this manual for maintenance and operation of the West Springfield project are intended to supplement the Regulations to permit obtaining all the benefits and protection against floods for which the project was designed. Failure to maintain and operate the project as required by the Regulations and as detailed herein can cause severe property losses and loss of life and can result in an irreparable loss of confidence in the flood protection system by citizens who have invested their funds on the basis of the protection which it provides.

3-02. GENERAL RULES AND REGULATIONS.- The general rules of the regulations prescribed by the Secretary of the Army to govern the maintenance and operation of flood control works are given in quotation marks in the following paragraphs and are defined further by remarks under each quotation.

(1) "The structures and facilities constructed by the United States for local flood protection shall be continuously maintained in such a manner and operated at such times and for such periods as may be necessary to obtain the maximum benefits."

(a) These requirements cannot be overstressed and the town authorities must make adequate provisions for funds, personnel, equipment, and materials to allow for the proper maintenance and operation of the flood protection works.

(2) "The State, political subdivision thereof, or other responsible local agency, which furnished assurance that it will maintain

and operate flood control works in accordance with regulations prescribed by the Secretary of War, as required by law, shall appoint a permanent committee consisting of or headed by an official hereinafter called the "Superintendent" who shall be responsible for the development and maintenance of, and directly in charge of, an organization responsible for the efficient operation and maintenance of all structures and facilities during flood periods and for continuous inspection and maintenance of the project works during periods of low water, all without cost to the United States."

(a) The committee should be composed of competent members, preferably men experienced in engineering or construction work of a nature similar to the flood protection works. The committee must be given broad authority to carry out its responsibilities.

(3) "A reserve supply of materials needed during a flood emergency shall be kept on hand at all times."

(a) Materials such as sandbags, canvas or sisal-craft paper, cinders, etc., and tools such as picks, shovels, block and tackle, crow bars, etc. should be obtained and held in reserve to meet any ordinary emergency that may occur during flood periods. Borrow pits for embankment materials should be available and sources of where to obtain additional supplies of material, tools and equipment should be well established in order that these articles can be obtained quickly in case of an emergency.

(4) "No encroachment or trespass which will adversely affect the efficient operation or maintenance of the project works shall be permitted upon the rights-of-way for the protective facilities."

(a) The grazing of cattle, disposal of rubbish, erection of fences or barriers, wearing of foot paths or any form of trespassing on the project must be prohibited.

(5) "No improvement shall be passed over, under, or through the walls, levees, improved channels or flood ways, nor shall any excavation or construction be permitted within the limits of the project right-of-way, nor shall any change be made in any feature of the works without prior determination by the District Engineer of the War Department or his authorized representative that such improvement, excavation, or alteration will not adversely affect the functioning of the protective facilities. Such improvements or alterations as may be found to be desirable and permissible under the determination shall be constructed in accordance with standard engineering practice. Advice regarding the effect of proposed improvements or alterations on the functioning of the project and information concerning methods of construction acceptable under standard engineering practice shall be obtained from the District

Engineer or, if otherwise obtained, shall be submitted for his approval. Drawings or prints showing such improvements or alterations as finally constructed shall be furnished the District Engineer after completion of the work."

(a) Any contemplated improvements or alterations as outlined above must be submitted to the U.S. Engineer Office, Boston, Massachusetts and the approval of the Division Engineer obtained prior to the town authorizing the work. All requests for approval shall be in writing and complete drawings in duplicate, one set of which shall be in reproducible form, must be submitted along with a full description of the work intended. The town will be held responsible for obtaining prior approval from the U.S. Engineer Office, of any improvements or alterations proposed by themselves, private parties or any public utilities. The town shall furnish the Division Engineer as-built drawings in duplicate of the completed work.

(6) "It shall be the duty of the superintendent to submit a semi-annual report to the District Engineer covering inspection, maintenance and operation of the protective works."

(a) See Paragraph 3-05 of this manual for instructions on submitting reports.

(7) "The District Engineer or his authorized representatives shall have access at all times to all portions of the protective works."

(a) The Division Engineer or his representatives will make periodic inspections of the protective works to determine if the project is being properly maintained and operated by the town.

(8) "Maintenance measures or repairs which the District Engineer deems necessary shall be promptly taken or made."

(a) The town should maintain the facilities and keep them in good repair and not wait for the Division Engineer to call matters to their attention. The Division Office will advise the town how to make any major repairs to the facilities.

(9) "Appropriate measures shall be taken by local authorities to insure that the activities of all local organizations operating public or private facilities connected with the protective works are coordinated with those of the superintendent's organization during flood periods."

(a) The town should formulate plans and negotiate agreements with local organizations and companies, who are operating facilities connected with the protection works, to insure that their activities will be properly coordinated with the superintendent's organization

during flood periods.

(10) "The War Department will furnish local interests with an Operation and Maintenance Manual for each completed project, or separate useful part thereof, to assist them in carrying out their obligations under these regulations."

(a) The flood control committee should familiarize themselves with the contents of the manual. The superintendent should conduct classes to instruct his subordinates in the proper maintenance and operation of the flood protection facilities as outlined in the manual. The town authorities are encouraged to call on the U.S. Division Engineer Office for any additional advice or instructions required by them in carrying out the town's obligations for maintaining and operating the flood protection facilities.

3-03. MAINTENANCE. - a. The work "maintenance" as used in this manual, applies to the upkeep, repair and care of the work constructed by the Department of the Army and turned over to the town. Failure to properly maintain the structures will lead to deterioration and possible failure in flood time when there is dire need of dependable protection.

b. Satisfactory and dependable operation depends on constant maintenance. The organization which cares for maintenance will be familiar with all parts of the system and will be in a position to use them effectively in time of stress.

c. Maintenance involves regular inspection of the entire system to detect any deterioration or faulty operation that needs repair. This does not mean a casual automobile trip to places easily accessible, but actually walking over every part of the system.

d. In addition to inspection, stop-log structures and pumping stations require testing at stated intervals to discover the difficulties that may develop or the part that won't work when it should.

e. Each of the major features of your project will be discussed separately with respect to the points that should be watched as developed through the use of similar structures over a long period of years.

3-04. OPERATION. - a. Operation in this manual refers to the actual use of the various features of the protection works during flood periods of the river. It is intended that the procedure outlined herein will be sufficient to insure protection from floods to the design stage; however, advice relative to operation may be secured at any time from the New England Division Office, Flood Control Section.

b. When danger from high waters is expected it is important that decisions be reached and prompt action taken and that the person in charge has the authority to carry out his decisions.

c. To insure correct operation it is essential that at least one person be familiar with all phases of the flood protection works, and know when to start pumping stations, install stop-logs, location of gates and valves and when to close them, just what supplies are on hand and necessary transportation of supplies to danger points, and what men and tools can be mobilized for the patrolling and repair work.

d. Arrangements should be made with the United States Weather Bureau Office, Brainard Field, Hartford, Connecticut (telephone number Hartford 2-8116), to keep the town informed on flood predictions. The Weather Bureau Office at Hartford is the official agency for collecting precipitation and runoff data and the preparation of flood forecasts and is responsible for issuance of flood warnings. During impending flood periods, it receives telephoned reports of precipitation and runoff every six hours from selected points in the Connecticut River Basin. From these data Connecticut River stage forecasts for critical locations between White River Junction, Vermont and Hartford, Connecticut are prepared.

e. It will be to the town's advantage to negotiate agreements with private owners and companies to operate and maintain project features that are directly related to facilities and property of those parties. The town must remember, however, that the Corps of Engineers will look only to the town for maintenance and operation of the project since that is the body which executed assurances of local cooperation.

3-05. REPORTS. - a. The regulations prescribed by the Secretary of the Army call for reports to be submitted by the superintendent to the Division Engineer, covering inspection, maintenance and operation. Inspection of the flood protective facilities shall be made immediately prior to flood seasons, immediately following floods, and otherwise at intervals not exceeding 90 days as required by the regulations.

(1) Floods can occur in any month of the year. Spring is the season in which the majority of the floods have occurred. The three greatest floods of record occurred as follows: the highest occurred March 1936, the second highest September 1938 and the third highest November 1927.

b. To assist the superintendent in making his inspections, a series of report forms for the individual features has been

prepared. Samples of these forms are given in Appendix "C". The superintendent will have additional copies printed for use in submitting his reports.

c. The semi-annual reports should be submitted in triplicate to the Division Engineer each February and August. The reports will be submitted in letter form with copies of the inspection forms covering the inspections made during the period of the report. The reports shall cover the following points:

(1) A description of the maintenance work performed in the preceding six months.

(2) The number and classification of men working on maintenance, regularly and intermittently.

(3) Description of any work performed by contract on the repair or improvement of the project.

(4) Describe what use or operation of the system was made during the period being reported.

(5) Suggestions relative to public cooperation, and comments concerning public sentiment on the protection obtained, are considered pertinent and desirable data for inclusion in the report, but such data are not required.

SECTION IV

DIKES

4-01. DESCRIPTION. - The design of the earth dikes in the flood protection system for West Springfield is based on sound engineering principles.

a. WEST SPRINGFIELD DIKE - The original dikes in West Springfield were constructed of random material to the height of the 1927 high-water and were damaged and overtopped by the flood of March 1936.

The construction work performed by the Corps of Engineers consisted of strengthening and raising the dikes to a height greater than the level of the 1936 flood. This was accomplished by placing an impervious blanket on the riverside and top of the dike, and driving a steel sheet pile cutoff where seepage had occurred. Both slopes were covered with topsoil to prevent erosion and on the riverside, where scour from the Connecticut or Westfield Rivers may occur, riprap was provided. Foundation relief wells were provided at the landside toe of dike for the purpose of intercepting seepage which would otherwise emerge in landside areas to cause boils and piping.

b. RIVERDALE DIKE - The dike consists of a random, rolled earth fill section with pervious material at the landside toe and an impervious blanket on the riverside and top. The riverside slope of the dike along the reach of river subject to high velocities is faced with dumped rock. The remaining riverside slope and the entire landside slope is topsoiled and seeded. The riverside toe of dike is provided with a cut-off trench. The landside toe is provided with suitable toe drains for intercepting and disposing of seepage through and under the dike. Foundation relief wells were provided at the landside toe of dike.

4-02. MAINTENANCE. - a. The regulations prescribed by the Secretary of the Army under paragraph 208.10 (b)(1) give rules for the maintenance of levees. These rules apply to earth dikes, and are quoted here to avoid cross references to the regulations. Following this, a few of the points that apply particularly to the Town of West Springfield are discussed.

"Levees - (1) Maintenance. The Superintendent shall provide at all times such maintenance as may be required to insure serviceability of the structures in time of flood. Measures shall be taken to promote the growth of sod, exterminate burrowing animals, and to provide for routine mowing of the grass and weeds, removal of wild growth and drift deposits, and repair of damages caused by erosion or other forces. Where practicable, measures shall be taken to retard bank erosion by planting of willows or other suitable growth on areas riverward of the levees. Periodic inspections shall be made by the

Superintendent to insure that the above maintenance measures are being effectively carried out and further, to be certain that:

"(i) No unusual settlement, sloughing or material loss of grade or levee cross section has taken place;

"(ii) No caving has occurred on either the land side or the river side of the levee which might affect the stability of the levee section;

"(iii) No seepage; saturated areas, or sand boils are occurring;

"(iv) Toe drainage systems and pressure relief wells are in good working condition, and that such facilities are not becoming clogged;

"(v) Drains through the levees and gates on said drains are in good working condition;

"(vi) No revetment work or riprap has been displaced, washed out or removed;

"(vii) No action is being taken, such as burning grass and weeds during inappropriate seasons, which will retard or destroy the growth of sod;

"(viii) Access roads to and on the levee are being properly maintained;

"(ix) Cattle guards and gates are in good condition;

"(x) Crown of levee is shaped so as to drain readily, and roadway thereon, if any, is well shaped and maintained;

"(xi) There is no unauthorized grazing or vehicular traffic on the levees;

"(xii) Encroachments are not being made on the levee right-of-way which might endanger the structure or hinder its proper and efficient functioning during times of emergency.

"Such inspections shall be made immediately prior to the beginning of the flood season; immediately following each major high water period, and otherwise at intervals not exceeding 90 days; and such intermediate times as may be necessary to insure the best possible care of the levee. Immediate steps will be taken to correct dangerous conditions disclosed by such inspections. Regular maintenance repair measures shall be

accomplished during the appropriate season as scheduled by the Superintendent."

b. Any unusual settlement, sloughing or caving should be corrected to restore the original dike grades. No major repair work shall be made without prior approval of the Division Engineer in order that such repairs that may be necessary will not adversely affect the functioning of the protective facilities.

c. The dikes between Memorial Bridge and North End Bridge were rebuilt with a core of free draining material. A drain was installed at the landside toe as an outlet for seepage through the dike during high water to prevent saturation of the landside slope and the resultant sloughing. The remainder of the earth dikes have cores of semi-impervious material.

(1) The toe drains should be inspected periodically and any silt affecting their proper functioning should be removed.

d. Foundation Treatment: There are 101 type "A" and 60 type "B" foundation relief wells and 50 piezometers located in the landside of the West Springfield Dike from Agawam Bridge to about 600 ft. downstream of the Circuit Avenue Pumping Station. The locations of these wells and piezometers are shown on Plates XXIIIA, XXIIIB, XXIIIC, and XXIIID. Details of both types of wells are shown on Plate XXVIB and pertinent relief well data are listed in Tables I, II, & III on pages 14B to 14E. At the Riverdale Dike there are 48 foundation relief wells between Stations 70 + 00 and 110 + 00, spaced at 50, 100 and 125-foot centers. These wells are similar in construction to type "A" wells at the West Springfield Dike except that at wells adjacent to piezometers the top of the mandrel pipe is fitted with a brass plug and coupling and inclosed in a valve box in order to facilitate observation. Another pressure relief treatment at the Riverdale Dike consists of moderately deep landside toe drains located between the following stations:

Stop-Log "N" to Sta. 15 + 00
Sta. 24 + 00 to Sta. 31 + 00
Stop-Log "S" to Sta. 123 + 00

Risers are provided at intervals along these drains for observation and cleanout purposes.

(1) Inspection and maintenance of type "A" Relief Wells:- At West Springfield Dike, the wells located at manholes should be carefully inspected during periods of high water to ascertain that they are functioning properly. If this inspection reveals any improper operation of the wells, the Division Engineer should be notified immediately. Under normal conditions, all type "A" relief wells at West Springfield Dike shall be opened and inspected at least once every 5 years. Where found necessary, wells shall be cleaned and repaired. In general, cleaning may be accomplished by flushing clean water through the 1 1/4" mandrel pipe to remove any silt or dirt which may have accumulated in

the well. When cleaning cannot be accomplished in this manner, it may first be necessary to lower small diameter jet pipes to the bottom of both the well and the mandrel pipe and simultaneously jet with water to unplug the cross tee at the bottom of the mandrel pipe. The Superintendent shall notify the Division Engineer when the 5-year inspection is to be made at the West Springfield Dike and when cleaning and repairing of any relief wells are planned in order that arrangements may be made to have a government inspector assist with the inspection and cleaning of the wells. The last inspection was in the fall of 1952 at which time required repairs were made.

At the Riverdale Dike, inspection and maintenance of the system shall be made as prescribed under paragraph 4-02-a.(1) of this manual and during the periods of high water. The wells shall be opened and inspected after the first high water causing them to discharge. Where found necessary wells shall be cleaned and repaired. Cleaning of these wells shall be accomplished in the same manner as outlined for type "A" relief wells at West Springfield Dike.

(2) Inspection and maintenance, Type "B" Relief Wells:- All Type "B" relief wells shall be inspected as prescribed under paragraph 4-02-d(1). Any condition found during these inspections which might impair the functioning of the wells shall be reported to the Division Engineer. Instructions relative to wells requiring corrective measures such as cleaning and repairing will be given to the Superintendent by the Division Engineer as inspection reports are received. The last inspection was in the fall of 1952.

(3) Piezometers. During periods of high water at the West Springfield Dike, piezometers located between high producing wells should be read constantly while pumps are in operation at the Circuit Avenue Pumping Station. Locations of possible high producing wells may be determined from pumping test data listed in Table III following this paragraph. If piezometer readings indicate a steady rise in ground water elevation, it may be necessary to place auxiliary pumps in operation at specific wells or manholes to prevent ground water rising above a safe elevation. The Division Engineer shall be notified at once if such a condition occurs. Instructions will follow immediately as to type of pumps required and where pumps shall be installed.

e. The grassed slopes should be cut regularly to promote good turf and not allowed to go to hay. The grass should be cut back when it reaches a height of about 8 inches to about 4 inches.

Dec 1953

TABLE I
RELIEF WELL DATA
WEST SPRINGFIELD DIKE
TYPE A RELIEF WELLS

Relief Well (RW) Number	(1) Station	Elevation referred to m.s.l. Top of V.C. Pipe	Discharge Invert	Bottom of Well	Clear Depth of Well (feet)
1A	58+64	55.0	47.5	32.9	22.1
1B	59+14	53.4	48.6	32.5	20.9
1C	59+66	53.4	50.3	32.1	21.3
1D	60+14	53.9	49.1	33.4	20.5
2A	60+64	54.9	47.5	33.1	21.7
2B	61+14	55.1	49.1	26.3	28.8
2C	61+64	55.3	48.5	32.4	22.9
2D	62+14	55.0	48.2	8.0	47.0
3A	62+64	54.8	48.0	7.9	46.9
3C	63+64	55.6	49.1	8.8	46.8
3D	64+14	53.4	49.3	5.1	48.3
4B	65+14	54.4	50.6	8.3	46.1
4C	65+89	54.9	51.2	9.5	45.4
4D	66+39	54.6	50.8	10.3	44.3
6A	66+89	52.4	44.0	9.4	43.0
6B	67+39	52.5	44.2	9.2	43.3
6C	67+89	52.3	44.2	12.6	39.7
6D	68+39	51.8	44.7	15.2	36.6
7A	68+89	51.4	45.0	8.8	42.6
7B	69+39	52.4	44.6	13.8	38.6
7C	69+89	51.9	44.5	16.7	35.2
7D	70+39	50.9	44.9	14.3	36.6
8A	70+89	51.8	45.0	14.6	37.2
8B	71+39	51.6	44.8	13.0	38.6
8C	71+89	50.5	45.7	14.9	35.6
8D	72+39	51.3	44.9	15.5	35.8
9A	72+89	52.2	45.0	16.0	36.2
9B	73+39	52.1	45.9	15.3	36.8
10B	75+52	52.7	45.9	15.5	37.2
10C	76+27	52.6	45.2	15.2	37.4
11A	77+02	51.7	45.8	15.1	36.6
11B	77+77	50.4	45.9	15.1	35.3
11C	78+40	49.7	45.6	14.5	35.2
12A	78+90	50.2	45.4	14.3	35.9
12B	79+40	50.9	47.1	16.1	34.8
12C	79+90	49.5	46.0	15.2	34.3
12D	80+40	49.5	45.6	15.7	33.8
13A	80+90	50.0	45.5	17.0	33.0
13B	81+40	48.9	46.8	9.5	39.4
13C	81+90	48.8	46.4	11.1	37.7
13D	82+40	48.9	46.1	11.3	37.6
14A	82+90	48.4	45.6	9.4	39.0
14C	83+90	48.5	46.3	10.8	37.7
14D	84+40	49.1	46.8	11.4	37.7
15B	85+40	49.8	46.2	10.9	38.9
15C	85+90	49.0	46.5	11.3	37.7
15D	86+40	49.7	46.5	11.0	38.7
16A	86+90	49.4	45.8	13.3	36.1
16B	87+40	49.4	46.8	13.9	35.5
16D	88+40	48.4	46.4	11.6	36.8
17A	88+90	48.7	46.3	31.0	17.7

(1) Location of Relief Wells installed in 1947. For Plan see Plates XXIIIA, XXIIIB, XXIIIC, and XXIIID

TABLE I (Continued)
RELIEF WELL DATA
WEST SPRINGFIELD DIKE
TYPE A RELIEF WELLS

Relief Well (RW) Number	Station (1)	Elevation referred to m.s.l. Top of V.C. Pipe	Discharge Invert	Bottom of Well	Clear Depth of Well (feet)
17B	89+40	48.7	47.1	34.7	14.0
17C	89+92	48.0	46.1	31.7	16.3
17D	90+40	48.0	46.1	31.7	16.3
18A	90+90	49.0	46.2	32.4	16.6
18B	91+40	49.4	46.9	32.8	16.6
18C	91+90	49.0	46.8	32.6	16.4
18D	92+40	51.0	47.2	33.0	18.0
19A	92+90	50.0	47.0	32.3	17.7
19B	93+40	50.3	46.9	32.6	17.7
19C	94+07	51.1	48.3	33.6	17.5
20A	94+82	51.1	47.5	32.8	18.3
20B	95+57	51.6	48.0	32.8	18.8
20C	96+32	51.5	47.6	30.8	20.7
21A	97+07	51.7	48.5	33.7	18.0
21B	97+82	51.5	48.5	33.2	18.3
21C	98+50	51.4	48.0	32.9	18.5
22A	99+00	52.3	48.3	32.9	19.4
22B	99+50	52.3	48.8	33.2	19.1
22C	100+00	53.0	48.9	33.2	19.8
22D	100+50	52.8	48.2	32.4	20.4
23A	101+00	53.6	49.8	34.3	19.3
23B	101+50	52.5	49.0	33.0	19.5
23C	102+00	53.1	49.8	33.6	19.5
23D	102+50	53.2	49.5	33.6	19.6
24A	103+00	53.9	49.9	21.5	32.4
24B	103+50	52.5	49.3	21.1	31.4
24C	104+00	52.1	48.7	20.7	31.4
24D	104+40	53.1	48.6	--	25.5+
25A	105+00	52.6	49.3	26.1	26.5
25B	105+50	53.9	49.7	23.3	30.6
25C	106+00	53.7	48.4	24.0	29.7
25D	106+50	53.9	49.7	21.2	32.7
26A	107+00	54.0	50.1	20.9	33.1
26B	107+50	53.4	50.6	21.1	32.3
26C	108+00	54.5	50.8	23.0	31.5
26D	108+50	54.4	50.1	21.7	32.7
27A	109+00	54.1	51.3	26.3	27.8
27B	109+50	54.2	50.3	28.2	26.0
27C	110+00	54.5	51.0	28.6	25.9
27D	110+50	53.5	50.7	28.0	25.5
28A	111+00	54.1	51.8	29.2	24.9
28B	111+50	53.2	50.9	29.0	24.2
28C	112+00	53.7	51.2	28.3	25.4
28D	112+50	53.9	51.2	30.5	23.4
29A	113+00	54.2	52.0	35.2	19.0
29C	114+00	54.4	50.9	34.1	20.3
29D	114+50	54.8	51.6	36.8	18.0
30A	115+00	55.4	51.4	36.6	18.8
30B	115+50	55.8	51.5	36.6	19.2
31A	116+00	55.7	52.3	37.6	18.1

(1) Location of Relief Wells installed in 1947. For Plan see Plates XXIIIA, XXIIIB, XXIIIC and XXIIID.

TABLE II
RELIEF WELL DATA

WEST SPRINGFIELD DIKE
TYPE B RELIEF WELLS

Relief Well (RW) Number	(1) Station	Elevation referred to Mean Sea Level: Top of Riser	Discharge Invert	Bottom of Screen (2)	Clear Depth of Well (feet)
1E	59+39	53.36	48.6	-35.3	88.3
1F	60+39	53.90	48.4	-28.3	81.9
2F	61+39	54.53	48.1	-27.1	81.3
2E	62+39	54.13	48.4	-23.0	76.8
3G	63+04	55.46	49.3	5.8	49.3
3E	63+39	55.95	48.2	-15.6	71.2
3F	64+46	55.83	48.1	-24.9	80.3
4F	64+74	56.13	50.7	6.1	49.7
4E	65+59	57.27	50.8	-23.0	79.9
6E	66+99	55.91	51.1	-20.3	75.9
7E	69+14	53.94	45.2	-20.4	74.0
8E	71+64	54.01	45.7	-18.7	72.4
9D	74+12	53.76	45.8	-21.3	74.8
9E	74+67	54.20	46.5	-17.0	70.9
10F	75+70	54.55	46.2	-22.9	77.1
11E	77+40	54.21	45.4	-16.3	70.2
11D	78+65	52.33	46.4	-18.8	70.8
12F	79+71	55.96	46.9	-26.6	80.2
12E	80+65	52.30	46.3	-26.9	78.9
13H	81+15	51.88	46.9	-36.0	87.6
13G	82+30	51.16	46.8	-36.5	87.3
14E	83+50	51.44	47.3	-39.7	91.0
14F	84+65	51.16	46.7	-31.9	82.9
15E	85+65	51.77	46.5	-34.6	86.2
15F	86+65	51.78	46.4	-31.5	83.1
16E	87+80	51.61	46.9	-27.3	78.8
16F	88+65	51.44	46.9	-18.8	80.1
17E	89+15	50.86	46.9	-35.7	86.4
17F	89+65	50.63	47.3	-40.4	90.9
17G	90+15	50.40	47.4	-41.8	92.0
17H	90+65	50.98	46.8	-30.6	81.4
18E	91+15	51.60	45.8	-38.7	90.2
18F	91+65	51.97	46.8	-37.9	89.7
18G	92+15	52.48	47.5	-23.6	75.7
18H	92+65	54.67	48.1	-21.7	76.0
19E	93+15	53.15	48.0	-26.1	78.9
19F	93+74	52.58	47.2	-19.5	71.7
19G	94+44	52.83	47.3	-16.3	68.8
20D	95+19	53.18	47.5	-17.0	69.9
20E	96+03	53.36	48.2	- 9.7	62.7
20F	96+70	53.52	48.8	- 1.8	55.0
21F	97+44	54.50	48.6	-12.9	67.1
21E	98+15	54.21	48.4	-13.8	67.7
21D	98+75	54.54	49.2	-14.6	68.8
22H	99+25	54.65	48.5	-10.9	65.2
22G	99+75	55.03	49.2	-14.2	68.9
22F	100+25	55.01	49.2	-13.9	68.6
22E	100+75	54.80	49.5	-17.3	71.8
23H	101+25	55.37	48.7	-27.2	82.2
23G	101+75	55.71	49.8	-30.4	85.8
23F	102+25	55.55	49.0	-23.6	78.8
23E	102+75	55.61	49.3	-19.3 (3)	64.7
24E	104+50	55.43	48.9	-11.4	66.5
25E	105+75	56.12	49.6	-18.8	74.6
26F	107+25	55.41	49.3	-12.7	73.8
26E	108+75	55.84	50.0	- 1.2	56.8
27E	110+25	55.86	50.2	11.9	43.8
28E	111+75	55.27	50.1	26.2	29.0
29F	113+40	56.43	50.9	34.8	21.6
29E	114+75	56.70	50.1	35.4	21.0

(1) Location of Relief Wells installed in 1952. For Plan see Plates XXIIIB, XXIIIC and XXIIID.
(2) Bottom of 4-inch plug.
(3) Lower portion of well plugged with concrete. Top elevation of concrete plug is - 9.09

TABLE III

WEST SPRINGFIELD DIKE
PUMPING TESTS OF TYPE B RELIEF WELLS (1)

(2) Station	River (3) Elevation	Drawdown Feet	Discharge gal./min.
59+39	40	4.0	290
59+39	40	12.0	670
60+39	40	4.0	235
60+39	40	13.0	717
61+39	40	4.0	307
61+39	40	12.5	888
62+39	40	4.0	411
62+39	40	8.0	715
63+04	40.5	10.0	326
63+39	40	4.0	434
63+39	40	11.0	810
64+46	40	4.0	403
64+46	40	10.0	851
64+74	40.5	11.3	158
65+59	40	4.0	408
65+59	40	9.0	859
66+99	40	4.0	310
66+99	40	10.8	770
69+14	40	4.0	590
69+14	40	6.0	737
71+64	40	4.0	316
71+64	40	10.0	554
74+12	40	4.0	402
74+12	40	7.0	503
74+67	40	4.0	282
74+67	40	6.0	427
75+70	40	4.0	293
75+70	40	8.5	480
77+40	40	5.0	84
78+65	40	4.0	87
78+65	40	13.5	232
79+71	40.5	15.0	21
80+65	40	4.0	80
80+65	40	14.0	230
81+15	40.5	4.0	197
81+15	40.5	8.5	300
82+30	40	4.0	85
82+30	40	9.0	186
83+50	40	4.0	230
83+50	40	13.5	503
84+65	40	4.0	248
84+65	40	13.0	503
85+65	40	4.0	245
85+65	40	11.0	457
86+65	40.5	4.0	240
86+65	40.5	9.9	421
87+80	40	4.0	351
87+80	40	10.0	550
88+65	40	4.0	411
88+65	40	9.5	694
89+15	40	4.0	461
89+15	40	7.0	602
89+65	40	4.0	470
89+65	40	8.5	665
90+15	40	4.0	402
90+15	40	8.5	680
90+65	40	4.0	271
90+65	40	9.5	398
91+15	40.5	4.0	307
91+15	40.5	9.5	448
91+65	40.5	4.0	411
91+65	40.5	12.0	550
92+15	40.5	4.0	393
92+15	40.5	9.6	578
92+65	40.5	4.0	285
92+65	40.5	8.0	527
93+15	40.5	4.0	517
93+15	40.5	7.0	800
93+74	40.5	4.0	316
93+74	40.5	9.6	448
94+44	40.5	4.0	350
94+44	40.5	9.5	457
95+19	40.5	4.0	192
95+19	40.5	14.0	380
96+03	40.5	4.0	250
96+03	40.5	12.0	355
96+70	40.5	4.0	220
96+70	40.5	8.8	250
97+44	40	4.0	243
97+44	40	6.5	250
98+15	40	4.0	130
98+15	40	10.5	195
98+75	40	4.0	300
98+75	40	6.3	326
99+25	40.5	4.0	152
99+25	40.5	6.5	200
99+75	40.5	4.0	465
99+75	40.5	6.5	596
100+25	40.5	4.0	335
100+25	40.5	5.0	457
100+75	40.5	4.0	354
100+75	40.5	7.0	503
101+25	40.5	4.0	270
101+25	40.5	8.5	521
101+75	41	4.0	185
101+75	41	8.0	302
102+25	41	4.0	210
102+25	41	8.7	300
102+75	41	4.0	120
102+75	41	6.7	244
104+50	40.5	4.0	78
104+50	40.5	15.0	250
105+75	40.5	4.0	189
105+75	40.5	14.0	488
107+25	40.5	4.0	102
107+25	40.5	15.0	250
108+75	41	4.0	132
108+75	41	15.0	377
110+25	41	4.0	128
110+25	41	15.0	290
111+75	41	4.0	95
111+75	41	10.2	190
113+40	41	3.8	20
114+75	41	4.3	22

(1) Pumping tests of Type A Wells not performed
(2) Location of Relief Wells installed during 1952. For Plan see Plates XXIIIB, XXIIIC and XXIIID.
(3) Elevations are to the nearest 0.5-foot and are referred to the plane of mean sea level.

f. When sections of the dike require reestablishment of turf, seeding operations should be started at the earliest practicable date in the spring to secure the greatest possible protection against erosion. Areas requiring seeding shall be dressed to fill gullies, and irregularities in the surface. The surface should then be raked or harrowed parallel to the contour of the dike (never up and down) to a depth of three-quarters of an inch. After the seed is sown the surface shall be lightly raked with iron rakes and all surfaces lightly rolled. The following seed mixtures were used in the original construction:

(1) West Springfield Dike

Kind of Seed	Percentage
Perennial Rye Grass	12
Orchard Grass	25
Hard Fescue	7
Kentucky Blue	9
Sheep Fescue	9
Timothy	12
Perennial Red Clover	7
White Clover	7
Red Top	12
Total	100

(2) Riverdale Dike

Orchard Grass	30
Creeping Red Fescue	14
Canada Blue Grass	13
Red Top	12
Seaside Bent	8
Total grass seed	77
Other materials (maximum)	23
	100

The University of Connecticut or a recognized agronomist should be contacted for the purpose of analyzing the soil to determine if lime is needed and what fertilizer or seed mixture is best suited to the local conditions.

4-03. OPERATION. - a. The regulations prescribed by the Secretary of the Army under paragraph 208.10 (b) (2) give rules for the operation of levees. These rules apply to earth dikes and are quoted here to avoid cross reference to the regulations.

"Levees - (1) Operation. During flood periods the levee shall be patrolled continuously to locate possible sand boils or unusual wetness of the landward slope and to be certain that;

"(i) There are no indications of slides or sloughs

developing;

"(ii) Wave wash or scouring action is not occurring;

"(iii) No low reaches of levee exist which may be overtopped;

"(iv) No other conditions exist which might endanger the structure.

"Appropriate advance measures will be taken to insure the availability of adequate labor and materials to meet all contingencies. Immediate steps will be taken to control any condition which endangers the levee and to repair the damaged section."

b. Operation as referred to the use of dikes may be at a time of moderate high water such as a spring freshet or may be when unusual conditions indicate the possibility of dangerous flood heights. A map and table in a later section will show elevations at which the various parts of the system should be operated such as; checking flap valves and check valves, closing valves, installing stop logs, manning pumping stations and patroling dikes. Floods on the Connecticut River do not give much time in which to make extensive preparations, therefore prompt action in starting work is of utmost importance.

c. Operation of the protective system depends on the river stage at the various parts of the system. The patroling of the dikes depends on the depth of water against the riverside slope which for convenience will be referred to river stage as recorded by the Springfield Gage at Memorial Bridge.

(1) Only periodic patroling of the Dikes should be necessary until a river stage of 15.0 feet is reached at which time a thorough examination should be made at intervals of not more than four hours. As the water rises, the interval between examinations should be shortened until, at major flood stages, the dikes should be examined at hourly intervals, with special watchmen being assigned if necessary at places which might become dangerous.

(2) Patrolmen should be thoroughly instructed as to their duties; what they are to watch out for and the exact limits of their beat. On each journey of inspection they should carefully examine both slopes of the dike for: seepage or wetness on landside slope, sand boils on landside of dike, wave wash or scouring on riverside slope, and indications of slides or sloughs on both slopes.

(3) All unauthorized traffic on the dikes should be stopped at once, and patrolmen should be instructed to keep people off the dikes

unless they can show passes or credentials authorizing their presence.

(4) Plans should be made for a system of one-way traffic on the dikes in time of flood for bringing in supplies that may be needed. In the event that materials are urgently needed at a point, trucks can be routed both ways and after depositing their loads driven down the landside slope.

4-04. EMERGENCY REPAIR METHODS. - a. Scours. - Careful watch should be maintained over stretches of the dike where scouring is likely to occur, such as slopes not protected by riprap, blanketed foreshores, and particularly angles in the dike alignment where it is subjected to heavy currents, even though the slope is protected by riprap. If any indication of scouring is observed, soundings should be taken to observe the amount and progress of the scour. Sandbagging or dumped rock will generally afford the most practicable means of combatting this condition. The open ends of sandbags, so used, must be sewed or tied after filling with earth.

b. Wave wash. - Dikes may be subjected to wave wash on broad reaches of water even though the direct action of high wind is impeded by natural barriers such as trees. Well sodded slopes will usually withstand waves from a storm of about an hour's duration without serious damage. An attack over a longer period may become serious and the slopes should be protected by sacking or equivalent protection. Extent of washes can be observed by wading along the attacked slope. Sandbags should be placed in the erosions in as effective a manner as possible, carrying the protection well above the action of the waves. Sandbags used for this purpose require only about one-half cubic foot of material and should be sewed or tied. The aim is to obtain a maximum of coverage with only sufficient weight to hold the sack in place.

c. Sand Boils. - (1) General. - A sand boil is the result of a transfer of pressure head and seepage from the river through a pervious stratum near or at the surface to the landside of the levee. This seepage under pressure tends to push its way to the surface and actually floats the material through which it flows. Provided the weight of the relatively impervious soil layer overlying the pervious stratum in which the flow under pressure is occurring is sufficient to counterbalance this pressure, no harmful effect results. When the soil stratum overlying the pervious layer is insufficient to counterbalance the upward pressure or when no such stratum exists, boils break through the surface on the landside wherever these weaknesses are present. The sand boil may discharge relatively clear water or the discharge may contain quantities of sand and silt, depending upon the magnitude of the pressure and the size of the boil.

(2) Effects of Sand Boils. - Sand boils can produce three distinctly different effects on the levee, depending upon the condition of flow under the levee. These three effects are illustrated by the following figures. In Figure 1, Plate IIIA, Appendix "D", the seepage flow develops a definite pipe or tube under the levee. This breaks out at the landside toe in the form of one or more large sand boils. Unless checked, this flow causes a cavern to be developed under the levee, resulting in subsidence of the levee and subsequent overtopping. This case can be most easily recognized by slumping of the levee crown. Figure 2, Plate IIIA, Appendix "D" illustrates the case where seepage flows under pressure under the levee without following a defined path, as was the case above. This flow results in one or more boils outcropping at or near the landside toe. The flow from these boils tends to undercut and ravel the slope, resulting in a sloughing of the slope. Evidence of this type of failure is found in undercutting and ravelling at the landside toe. Figure 3, Plate IIIA, Appendix "D" shows a third type of effect of a sand boil. In this case, numerous small boils, many of which are scarcely noticeable, outcrop at or near the toe. While no boil may appear to be dangerous in itself, the consequence of the group of boils is to cause floatation of the soil, thereby reducing the shearing strength of the material at the toe, where maximum shearing stress occurs, to such an extent that failure of the slope through sliding results.

(3) General Instructions for Handling Sand Boils. - All sand boils shall be watched closely. All boils shall be marked conspicuously with flagging so that patrols can locate them without difficulty and observe changes in their condition. A sand boil which discharges clear water in a steady flow is usually not dangerous to the safety of the levee. The only action necessary in this case is to drain the excess water off to prevent it from standing near the levee. However, if the flow of water increases, and the sand boil begins to discharge material, corrective action shall be undertaken immediately.

(4) Method of Treatment.

(a) The accepted method of treating sand boils is to construct a ring of sand bags around the boil, building up a head of water within the ring sufficient to prevent further movement of sand and silt. The accepted method of ringing a sand boil is as follows:

1. The entire base of the sack ring is cleared of debris, in order to provide a watertight bond between the natural ground and the sack ring.

2. The sacks are then laid in a ring around the boil, with joints staggered, and with loose earth between all sacks.

3. The ring is carried only to a height sufficient to prevent material from being discharged. The ring should not entirely stop the flow of water, because of the probability of the excessive local pressure head causing additional ruptures of impervious strata and boils nearby.

4. A "V" shaped drain constructed of two boards, or a piece of sheet metal, is then placed near the top of the ring to carry off the water.

(b) Actual conditions at each sand boil will determine the exact dimensions of the ring. The diameter and height of the ring depend upon the size of the boil, and the flow of water from it. In general, the following considerations shall govern:

1. The base width shall be no less than 1-1/2 times the contemplated height.

2. It is well to include weak ground near the boil within the ring, thereby preventing a break through later.

3. The ring shall be of sufficient size to permit sacking operations to keep ahead of the flow of water.

(c) Where many boils are found to exist in a given area, a ring levee of sand bags shall be constructed around the entire area and, if necessary, water should be pumped into the area to provide sufficient weight to counterbalance the upward pressure.

d. Sloughs. - During prolonged high water stages, seeping and sloughing conditions on the back slopes may occur. Such conditions should be observed closely as to progress of seepage up the back slope and the amount of material that is being carried by the water. If the seep velocity becomes great enough to cause, or probably cause, erosion or sloughing of the slope, a sandbag covering should be placed on the seeping area, beginning well out from the toe and progressing up the slope. The covering should extend several feet beyond the saturated area. If the material is obtainable, the affected area should be covered with brush, straw or similar permeable material to a depth of two to four inches before placing the sandbag cover. This will permit the seep water to get away while serving as a filter to prevent loss of earth from the dike. After the covering is placed, close observation should be maintained and additional layers of sandbags placed on the pervious one until the velocity of the seepage is reduced to a point at which the amount of material carried is negligible.

e. Raising existing earth dikes. - In an emergency, time and other conditions permitting, the grade of a dike can be safely raised

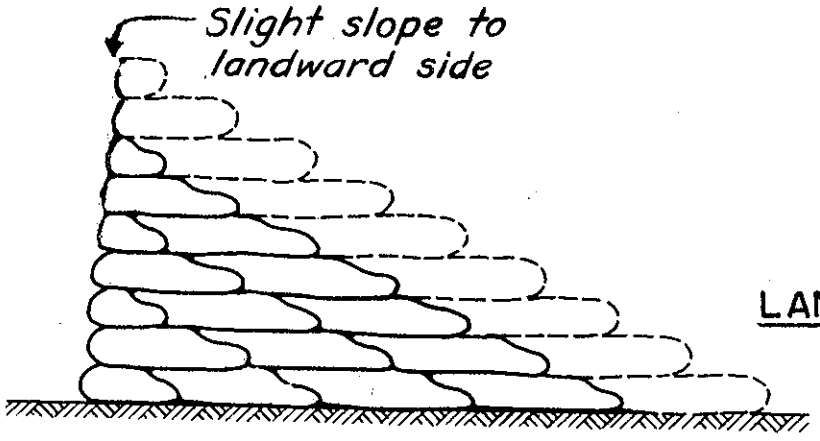

SECTION

Note: Sacks should be lapped at least 1/3 all ways and well mauled or tamped into place.

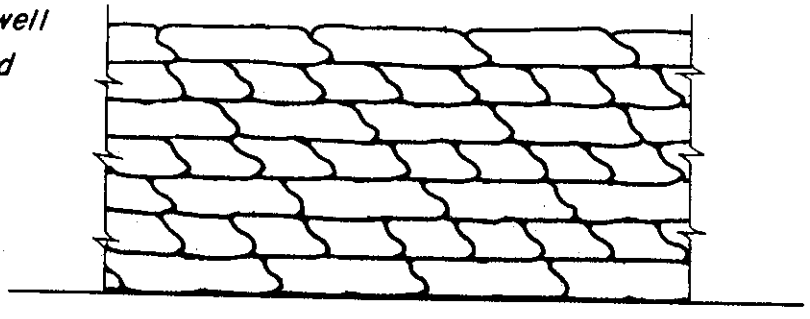

RIVERSIDE ELEVATION

SACKS REQUIRED PER 100' STA.
100 lb. "Feed" Sacks - 1 Cu. Ft. Each

Approx. Hgt. Sack Dike	Sacks High	Required
1.5	3	300
2.0	4	750
3.0	6	1400
4.0	8	2250
5.0	10	3250
6.0	12	4500
7.0	14	5950
8.0	16	7600

SACK DIKE OR TOPPING
STANDARD HIGH WATER
MAINTENANCE INSTRUCTION

U. S. ENGINEER OFFICE, PROVIDENCE, R. I.

foot is necessary, the layers of bags will have to be increased in number and reinforced. Sandbags are laid substantially in the manner described in (a) above. The stakes should be driven at least three feet in the ground, leaving at least three feet out, which will, in extreme cases, hold a three-foot topping if properly braced behind with sandbags. (See Plate II).

SECTION V
FLOOD WALLS

5-01. DESCRIPTION. - The flood walls are the reinforced concrete cantilever type, consisting of a vertical wall, or stem, on a base and in areas where seepage may occur are provided with a key and a steel sheet piling cutoff wall.

5-02. MAINTENANCE. - a. The following quotations from the regulations govern the maintenance of flood walls.

"Periodic inspections shall be made by the Superintendent to be certain that:

(1) No seepage, saturated areas, or sand boils are occurring;

(2) No undue settlement has occurred which affects the stability of the wall or its water tightness;

(3) No trees exist, the roots of which might extend under the wall and offer accelerated seepage paths;

(4) The concrete has not undergone cracking, chipping, or breaking to an extent which might affect the stability of the wall or its water tightness;

(5) There are no encroachments upon the right-of-way which might endanger the structure or hinder its functioning in time of flood;

(6) Care is being exercised to prevent accumulation of trash and debris adjacent to walls, and to insure that no fires are being built near them;

(7) No bank caving conditions exist riverward of the wall which might endanger its stability;

(8) Toe drainage systems and pressure relief wells are in good working condition, and that such facilities are not becoming clogged.

Such inspections shall be made immediately prior to the beginning of the flood season, immediately following each major high water period, and otherwise at intervals not exceeding 90 days. Measures to eliminate encroachments and effect repairs found necessary by such inspections shall be undertaken immediately. All repairs shall be accomplished by methods acceptable in standard engineering practice."

b. The expansion joint material serves to protect the copper water stop against damage. When the expansion joint material has deteriorated to the point where it no longer serves its purpose the loose material should be cleaned out, care being exercised not to injure the copper seal, and the joint poured full with asphalt.

5-03. OPERATION. - a. The following quotations from the regulations govern the operation of walls.

"Continuous patrol of the wall shall be maintained during flood periods to locate possible leakage at monolith joints or seepage underneath the wall. Floating plant or boats will not be allowed to lie against or tie up the wall. Should it become necessary during a flood emergency to pass anchor cables over the wall, adequate measures shall be taken to protect the concrete and construction joints. Immediate steps shall be taken to correct any condition which endangers the stability of the wall."

b. The recommendations made in paragraph 4-03 b for dikes apply equally as well for the operation of the walls.

5-04. EMERGENCY REPAIR METHODS. a. Sand boils. - See Section IV, Paragraph 4-04 c for a description and treatment of sand boils.

b. Monolith joints. - If vertical monolith joints have appreciable leakage, they can be controlled by dumping cinders, sand, or other such material on the riverside of the wall so the dumped material will be carried into the joint by the water and plug the leak.

c. Raising grade of wall. - In the event there is danger of the walls being overtopped by the flood, they can be raised safely to three feet above their present grade. This can be best accomplished by erecting wooden extensions such as shown on Plate IV of Appendix "D". The extension shown on Plate IVB must be modified to fit the walls due to various thickness and for those with capstones.

(1) The advance notice of a flood that would overtop the walls will not allow sufficient time to construct and install the wooden extensions unless detailed plans regarding availability of personnel and materials are made in advance.

SECTION VI

CLOSURE STRUCTURES

6-01. DESCRIPTION. - a. The closure structures are provided to permit passage through the flood protection systems during non-flood periods. A brief description of each closure structure and sill elevation is given below. All sill elevations are on the same datum as Springfield Gage, Memorial Bridge, the zero of which is 37.3 feet above mean sea level datum.

(1) WEST SPRINGFIELD DIKE. Timber closure members are used at the following stop log structures. These are stored in the town yard.

(a) Marine Stop-log No. 1. This structure has a single track railway leading down to the water surface to assist in removing boats from the water for repair or storage and has a clear opening of 15 feet. The elevation of the sill is 22.4.

(b) Marine Stop-log No. 2. This structure is similar to one shown above and has a clear opening of 15 feet, one inch and a sill elevation of 20.6.

(c) Chapin Street Stop-log. This structure provides highway access to the Verdi Club House which is outside the flood protection system. This structure has a clear opening of 14 feet, 9 inches and a sill elevation of 21.5.

(2) RIVERDALE DIKE. Aluminum closure members are used at the following stop-log structures. These are stored in shelters located adjacent to the openings.

(a) Stop-log "N". This structure is provided at Riverdale Road (U.S. Route 5) which is a 4-lane highway at the northerly end of the project. The clear opening is 74'-0" and the height 10'-7-1/2" maximum from top of abutment to roadway surface.

(b) Stop-log "E". This structure is provided at the westerly end of the Chicopee Bridge across a 2-lane highway. The clear opening is 51'-6" and the height 5'-10-1/2" from top abutment to roadway surface.

(c) Stop-log "S". This structure is provided at the southerly end of the project across Riverdale Road. The clear opening is 92'-6" and the height 10'-4" maximum from top of abutment to roadway surface.

6-02. MAINTENANCE. - a. The following quotations from the regulations govern the maintenance of closure structures.

"Closure structures for traffic openings shall be inspected by the superintendent every 90 days to be certain that:

"(1) No parts are missing;

"(2) Metal parts are adequately covered with paints;

"(3) All movable parts are in satisfactory working order;

"(4) Proper closure can be made promptly when necessary;

"(5) Sufficient materials are on hand for the erection of sandbag closures and that the location of such materials will be readily accessible in times of emergency.

"Tools and parts shall not be removed for other use. Trial erections of one or more closure structures shall be made once every year, alternating the structures chosen so that each gate will be erected at least once in every 3-year period. Trial erection of all closure structures shall be made whenever a change is made in key operating personnel. Where railroad operation makes a trial erection of a closure structure infeasible, rigorous inspection and drill of operating personnel may be substituted therefor. Trial erection of sandbag closures is not required. Closure materials will be carefully checked prior to and following flood periods, and damaged or missing parts shall be repaired or replaced immediately."

6-03. OPERATION. - a. The following quotations from the regulations govern the operation of closure structures.

"Erection of each movable closure shall be started in sufficient time to permit completion before flood waters reach the top of the structure sill. Information regarding the proper method of erecting each individual closure structure, together with an estimate of the time required by an experienced crew to complete its erection will be given in the Operation & Maintenance Manual which will be furnished local interests upon completion of the project. Closure structures will be inspected frequently during flood periods to ascertain that no undue leakage is occurring and that drains provided to care for ordinary leakage are functioning properly. Boats or floating plant shall not be allowed to tie up to closure structure or to discharge passengers or cargo over them."

b. The location of these structures is indicated on Plates VA and XLII of Appendix "D" which also show the river stages at which the openings should be closed to prevent flooding of the area back of the openings. Public and private parties whose passage through the closure structures is affected by the stopping of the gap should be notified of the intended closing in sufficient time to permit them to perform the necessary evacuation and protection of the public safety. Determination of the time at which any closure erection should be started must be based upon the rate of river rise and time required for installation. The following table shows the estimated time necessary for a trained crew equipped with the necessary tools, parts and material at the site to completely install the closures:

Closure	Size of Crew	Time Required
Marine Stop-log No. 1	10 men	2-1/2 hours
Marine Stop-log No. 2	10 men	2-1/2 hours
Chapin Street Stop-log	10 men	2-1/2 hours
Stop-log "N"	10 men	2-1/2 hours
Stop-log "E"	10 men	2 hours
Stop-log "S"	10 men	3 hours

The above estimated figures are based on hand labor.

c. Operation of the timber closures consists of placing the logs in the slots, one on top of the other. If excessive leakage develops, the logs may be backed up with a sand-bag wall hard against the landside face of the logs. The base width of this sand-bag wall should be twice its height in order to insure stability. Leakage may also be stopped by dumping cinders, ashes or sawdust into the water and letting them be drawn into the crevices that are discharging water.

d. Operation of the aluminum closures consists of bolting the beams and panels in place. Sand bags should be wedged tightly between the sill and panels, then additional sand bags placed on the riverside of the closure. These should be at least five bags wide and three high. End openings should be sealed as necessary. Plugs are provided in top of the abutment walls as reference points for measuring. In case settlement has taken place, a trial erection should be made to see if any alterations are necessary.

e. The removal of the rails in the marine stop-logs is not necessary; however a better seal can be obtained between the bottom log and the concrete sill if they are removed. If the rails are left in place sandbags can be used to fill the void between the top of rail and the concrete sill. The placing of canvas or sisalcraft paper on the riverside face of the stop logs will prevent undue leakage of water through the cracks between the timbers with two tiers of sandbags at the bottom to

securely anchor the canvas or sisalcraft paper and seal the joint between the first log and the sill. It is not necessary to sandbag behind the stop-logs as structural grade timbers are provided which will withstand the pressure. The top timbers in the closure should be wedged in place to prevent their tendency to float.

(1) Ample time should be allowed to erect the closures and due allowance must be made for the delays in operation occasioned by inexperienced help and other contingencies. The height of the predicted flood may eliminate a complete closure; however the initial closing should allow at least a three-foot freeboard.

(2) Care should be exercised to avoid removal of stop-logs during a temporary recession of flood waters which might be followed immediately by a second crest. When all danger from the flood has passed remove the timbers and removable supports, clean them, repair any damage, and return all parts to the respective storage sheds at the site.

f. Closure members should not be removed until the danger of any second crest in flood height has passed.

SECTION VII

OPENINGS THROUGH THE PROTECTIVE WORKS

7-01. DESCRIPTION. In addition to the stoplog closure structures there are utilities, drains, sewers, and pumping station discharges passing through the dikes. These features are listed below for reference.

a. WEST SPRINGFIELD DIKE

Location	Station	Description	Invert Elevation
North of North End Bridge	7+06	9" C.I. Sewer Outfall	46.8 at discharge
	8+96	Warren St. Pumping Sta.	45.5 " "
	9+75.9	Town Pumping Station	44.0+" "
	15+65	Southworth St. Sewer	44.0 " "
North End Bridge to Memorial Bridge	1+65	12" Catchbasin Outfall	
	6+90	12" Sewer Outfall	
	23+07	66" Sewer Outfall Cottage Street	41.0 " "
	23+16	24" Sewer Outfall Cottage Street	46.0 " "
	59+70.06	Bridge St. Pumping Sta.	38.9 " "
Memorial Bridge to Sta. 32+00	2+90.48	6" Gas main	
	11+06.38	U.E.L. Cable Crossing	
	13+21	12" Pipe Drain	56.2 " "
Sta. 32+00 to Sta. 56+87	51+88.38	6" Sewer-two outlets	58.9 ℄ of dike
	65+67	Circuit Ave. Pumping Sta.	41.2 at discharge
Sta. 56+87 to Agawam Bridge.	- 117+00	Town Pumping Station, 12", 24" and 36"	46.2 " " 42.7 " "
Above Agawam Bridge	- 154+60	Drain from River Street Underpass	

b. RIVERDALE DIKE

Stop-log "N"	4+04	6" Gas Main	-
"	4+72	10" Water Main	-
"	5+05	20" C.I. Pipe-Sanitary Inflow	57.4
"	5+25	24" C.I. Pipe-Storm Sewer outfall	53.25
Wayside Pumping Sta.	27+25	24" C.I. Pipe-Discharge	50.75

Revised Dec 1953

Location	Station	Description	Invert Elevation
Stop-log "E"	34+88	6" Gas Main	-
"	34+92	42" R.C. Pipe-Storm & San. Outfall	45.5
"	35+22	4" Gas Main	-
Stop-log "S"	110+40	24" C.I. Pipe-Sanitary Sewer Outfall	44.7
Riverdale Pumping Sta.	109+80	3'0"x4'-6" Conduit	43.5
"	109+80	12" C.I. Pipe-Discharge	44.57
Stop-log "S"	110+83	12" C.I. Pipe(Plugged for future connection)	-
"	111+60	6" Gas Main	-
"	111+76	10" Water Main	-

7-02. MAINTENANCE. - a. The following quotations from the regulations govern the maintenance of drainage structures:

"Adequate measures shall be taken to insure that inlet and outlet channels are kept open and that trash, drift, or debris is not allowed to accumulate near drainage structures. Flap gates and manually operated gates and valves on drainage structures shall be examined, oiled and trial operated at least once every 90 days. Where drainage structures are provided with stoplog or other emergency closures the condition of the equipment and its housing shall be inspected regularly and a trial installation of the emergency closure shall be made at least once every year. Periodic inspections shall be made by the Superintendent to be certain that:

"(1) Pipes, gates, operating mechanism, riprap, and headwalls are in good condition;

"(2) Inlet and outlet channels are open;

"(3) Care is being exercised to prevent the accumulation of trash and debris near the structures and that no fires are being built near bituminous coated pipes;

"(4) Erosion is not occurring adjacent to the structures which might endanger its water-tightness or stability.

"Immediate steps will be taken to repair damage, replace missing or broken parts, or remedy adverse conditions disclosed by such inspections."

b. Markers should be placed to locate each drainage structure that passes through the protection system so that they can be readily found during flood periods.

c. The 12" sewer outfall at Station 6+90 served the Curran & Jones Funeral Home and a valve was provided on the landside of the dike to prevent flooding during high water. The line is now inoperative as the Funeral Home has been tied into the Town sewer system.

d. The 12" catch basin outfall at Station 1+65 is not provided with a valve. It will be necessary to sand bag the catch basins during extreme high water as shown on Plate III, Appendix "D" for sand bagging sand boils.

7-03. OPERATION. - a. The following quotations from the regulations govern the operation of drainage structures:

"Whenever high water conditions impend, all gates will be inspected a short time before water reaches the invert of the pipe and any object which might prevent closure of the gate shall be removed. Automatic gates shall be closely observed until it has been ascertained that they are securely closed. Manually operated gates and valves shall be closed as necessary to prevent inflow of flood water. All drainage structures in levees shall be inspected frequently during floods to ascertain whether seepage is taking place along the lines of their contact with the embankment. Immediate steps shall be taken to correct any adverse conditions."

b. The sequence of operation of the pumps and drainage structures requiring attention when a flood is imminent is given below.

(1) WEST SPRINGFIELD DIKE (See Plate VI of Appendix "D").

(a) Warren Street Pumping Area. At Warren Street there are two pumping stations, designated respectively, as the Town Pumping Station and the Warren Street Pumping Station. The Town Pumping Station has a capcity of 15 c.f.s. with a 20-foot head which is adequate to take care of the dry weather or sanitary flow. Flows in excess of the capacity of the Town Pumping Station will be pumped by the Warren Street Pumping Station. It is impossible to set up exact instructions to apply to all rates of flow, but better pump efficiency will be achieved if the Town Pumping Station is shut off when pumps at the Warren Street Pumping Station are started, to utilize the 30-inch pumps to best advantage. The following instructions will indicate the procedure to be followed during a flood:

1. When the river rises to elevation 45.0 at Bridge Street Pumping Station, close the backwater gates on outfalls at Cottage Street. When the water level in the sewers reaches elevation 53.3, close the Southworth Street sewer gate and start the pumps in the Town Pumping Station.

The water level in the sewers must not be allowed to exceed elevation 54.0 and should be kept within the range of elevation 50.0 to 54.0. When it becomes apparent the pumps in Warren Street Pumping Station will be required, open the sluice gates at the intake to the sump.

2. Operate the pumps in either or both stations to maintain an elevation no higher than 54.0 as indicated on the float well gages.

3. After the river has receded to elevation 53.0 at Bridge Street Pumping Station, close the sluice gates into the sump at Warren Street Pumping Station.

(b) Bridge Street Pumping Area. All drainage at this station normally flows through a gravity flow conduit, adjacent to the pumping station, into the river. The critical points in the protected area are the Main and Union street underpasses which become flooded when the river stage indicated by the river level gage at this station, exceeds elevation 48.0. The following instructions are outlined to show the sequence of operations during a flood:

1. When the river rises to elevation 47.6 close the 5'-0"x 6'-0" sluice gate in the gravity flow conduit, and start the 16-inch pump.

2. Pump as required to maintain the level in sewers below elevation 48.0. When it becomes apparent the 30-inch pumps will be required, open the 8'-0" x 5'-0" sluice gate into the pump sump and start 30-inch pumps.

3. When the river recedes to elevation 48.0, close the 8'-0"x5'-0" sluice gate into the pump sump.

4. When the river recedes to elevation 46.0, open the 5'-0" x 6'-0" sluice gate and stop the 16-inch pump.

(c) Circuit Ave. Pumping Area. Oxbow Pond drains into the Westfield River through a gravity flow conduit (Invert Elev. 41.75) at this pumping station and then through a 30-inch cast iron pipe into the Westfield River. There is a 5'-0" x 4'-0" unseating pressure sluice gate at the entrance to the gravity flow conduit, a 30-inch gate valve on the land side of the dike on the 30-inch drain and a flap gate on the river end of the 30-inch drain.

The seepage under the dike in the vicinity of the Eastern States Exposition Grounds is a potential threat to the stability of the dike structure. Ponding water behind the dike will lower the differential head between the river side and land side of the dike and provide the greatest protection to the structure. It is necessary, therefore, to operate the pumping station as outlined herein to provide

the greatest degree of protection from floods.

1. When the river rises, permit water to rise in Oxbow Pond to elevation 46.0 and then close the sluice gate at the entrance to the gravity flow conduit.

2. Operate the pumps to maintain the pond in accordance with the following schedule as long as possible:

Elevation of River	Elevation of Oxbow Pond Maintained by Pumping
Below 55.0	46.0
55.0 to 60.0	47.0
60.0 to 65.0	48.0

Inflow will consist only of concurrent storm run-off and seepage and the rate of pumping will depend on the rate of inflow.

3. When the river recedes the schedule should be followed in reverse order until the river stage is below elevation 46.0. Then open the sluice gate in the gravity flow conduit.

(2) RIVERDALE DIKE. (See Plate XLII of Appendix D)

(All river elevations are on Mean Sea Level Datum and refer to elevations as indicated on the river level gage in each pumping station).

(a) Wayside Pumping Area.

1. When the river rises to elevation 55.0:

Open No. 5 Sluice Gate at the upper end of the 42" drain on the north side of Wayside Avenue.

Close No. 4 Sluice Gate on 42" gravity outfall sewer at the intersection of Wayside and Ashley Avenues.

Close No. 11 Sluice Gate.

The steps indicated above will cause all flow, normally discharged by gravity through the 42" outfall sewer at the Chicopee Bridge to be diverted to the pumping station and pumps should be operated as required to maintain stages in the suction chamber between elevations 50.0 and 53.5. (See Plate XLIX). Stop-planks are provided at the overflow weir in order to limit use of the storage pond to those flows which exceed the pumping capacity. When it becomes apparent that pumping capacity will be exceeded, remove the stop-planks. Flow into and from the storage pond will then be automatically controlled by the weir and flap gates respectively.

2. When the river reaches elevation 58.0:

Close No. 2 Sluice Gate at Stop-log "N" to divert the flow in the storm sewer along Riverdale Road to Wayside Pumping Station.

Erect aluminum closure members across one half of the roadway at Stop-log "N" and Stop-log "E".

3. When the river reaches elevation 60.0:

If the forecast river stage is less than 62.0, report by telephone to the New England Division Office, Flood Control Section, for instructions. If communications are disrupted, complete closures of Stop-log "N" and Stop-log "E".

If the forecast river stage is higher than elevation 62.0, complete closures of Stop-log "N" and Stop-log "E".

4. When the river rises to elevation 62.0:

Close No. 1 Sluice Gate at Stop-log "N".

5. When the flood has receded to elevation 61.0 and the forecast indicates the recession will continue, remove closures at Stop-log "N" and Stop-log "E".

6. As the flood continues to recede, restore sluice gates to normal (low flow) position at the same river elevations and in reverse order to those indicated for rising stages.

(b) Riverdale Pumping Area

1. When the river rises to elevation 51.0:

Close No. 10 Sluice Gate at the inlet end of the discharge conduit.

Close No. 6a Sluice Gate and open No. 6b Sluice Gate at Stop-log "S" to divert sanitary flows to the pumping station.

Close No. 7 Gate Valve.

Check No. 8 Sluice Gate for open position.

Check No. 9 Gate Valve for open position.

Operate the pumps as required to discharge storm water sewage and seepage into the river, and maintain stages in the suction chamber between elevations 46.0 and 50.5. (See Plate LI). A gated cross-connection is provided so that either pump may be used. Stop-planks are provided at the overflow weir in order to limit use of the storage pond to those flows which exceed the pumping capacity. When it becomes apparent that pumping capacity will be exceeded, remove the stop-planks. Flow into and from the storage pond will then be automatically controlled by the weir and flap gates respectively.

Revised June 1951

2. When the river reaches elevation 57.5:

Erect aluminum closure members across one half of the roadway at Stop-Log "S".

3. When the river reaches elevation 59.5:

If the forecast river stage is less than 61.5, report by telephone to the New England Division Office, Flood Control Section, for instructions. If communications are disrupted, complete closure of Sto-Log "S".

If the forecast river stage is higher than elevation 61.5, complete closure of Stop-Log "S".

4. Remove closure members at Stop-Log "S" at the same time as at Stop-Logs "N" and "E".

5. As the flood continues to recede, restore gates and valves to normal (low flow) position at the same river elevations and in reverse order to those indicated for rising stages.

SECTION VIII

PUMPING STATIONS

8-01. DESCRIPTION. - a. Warren Street Pumping Station. (See Plates XXXI to XXXIV). (1) System. A total area of 496 acres, roughly bounded by Kings Highway, South Boulevard, Park Avenue, and the flood wall between Riverdale Street and the Connecticut River, drains to the Warren Street Pumping Station.

There are two trunk storm sewers, one in Westfield Boulevard and Elm Street, and one in Kings Highway, draining the area into the outfall sewer in Warren Street, which is a 54 inch circular reinforced concrete sewer. A combined flow system outfalls through old, egg-shaped brick sewer lines at Southworth Street with a backwater gate at the flood wall along the Connecticut River. A 27 inch circular relief sewer in Riverdale Street allows the flow to be diverted from Southworth Street to the intake chamber of the Warren Street Pumping Station.

(2) Pumping Station. - The pumping station, constructed of reinforced concrete for the substructure and having a superstructure of structural steel and brick with translucent glass frame windows, houses three 36-inch propeller pumps. The station is located behind the flood wall and discharges through a conduit under Riverdale Road into the river. The station was designed to pump only storm water or sewage diluted with storm water. This design was predicated on the continued use of the old Warren Street Pumping Station, with one gasoline-engine driven volute pump, to pump sewage at times of no storm water flow.

(3) Pumping Station Equipment. - (a) Electricity. - Electric energy to the pumping station is 115/230 volts, 3 phase, 4 wire, and is fed underground from the pole across Warren Street near the rear door of the building. The feeder terminates in the junction box in the pump room and is connected to the service switch in the engine room. The line then feeds through the main air circuit breaker on the switchboard to the switchboard bus.

The switchboard is a dead-front, fully enclosed switchboard with manually operated air circuit-breakers for the control and protection of all feeders emanating from the switchboard. The switchboard also contains a copper-oxide battery charger, having a capacity of 36 amperes at 12 volts D.C., to maintain the engine batteries fully charged.

(b) Sluice Gates. - Two sluice gates are provided within the pumping station to permit closing of the pump room to the sewer so

that the pump sump may be dewatered if necessary during pumping operations and also that the pump room may be kept dry at low river stages. These gates are electrically operated, controlled by a push-button station at each gate hoist and are provided with limit switches to stop the gates at their maximum limits of travel.

A hand-operated sluice gate is installed on the discharge of the pumping station discharge conduit for emergency use in the event of a break in the conduit, or failure of both the gate and the check valves on a pump.

(c) 36-Inch Propeller Pumps. - The three 36-inch propeller pumps are gasoline-engine driven. Check valves are provided in the discharge of the pumps to facilitate starting and prevent back-flow of water through the pumps. Gate valves are provided in the discharge of each pump for use in the event that a flap valve becomes damaged by debris or does not fully close.

(d) Sump Pump. - A sump pump is installed in the wet sump so that the sump may be dewatered for cleaning or pump maintenance purposes. The pump is controlled from a push button station on the engine room wall adjacent to the pump motor. A swing connection is provided in the engine-cooling water line, near the sump pump discharge above the engine room floor, to permit connection of the sump pump discharge to the engine-cooling water system in the event the municipal water supply fails at a time when the use of the pumps is necessary.

(e) Trash Racks. - Movable trash racks are provided in the intake structure to screen out any large objects that might damage or clog the pumps during pumping operations. Manual hoists are provided for the racks so that the racks may be raised to facilitate cleaning and maintenance.

(f) Heating System. - An oil-fired low pressure steam heating system is provided to eliminate the necessity of draining the complete water system after each maintenance routine in the winter months, to facilitate starting engines, and to prevent the severe humidity conditions that would prevail without a heating system.

b. Bridge Street Pumping Station. - (See Plates XXXV to XXXVIII).
(1) System. - The area tributary to the Bridge Street Pumping Station is served by two storm sewer systems. One system for the area east of the Boston and Albany Railroad tracks and north of Bridge Street; the other system for the area west of these railroad tracks and south of Bridge Street.

The first area is served by a 40-inch by 60-inch egg-shaped combined-flow sewer in Bridge Street and a 66-inch circular relief sewer

in Day and Cottage Streets. A small sanitary system principally in Main Street, outfalls down Cottage Street through a 24-inch pipe. The relief sewer is used only when the Bridge Street sewer is overtaxed by storm runoff during normal river stages. During high river stages, valves in both the relief sewer and the Cottage Street sewer are closed and the entire flow is delivered to the Bridge Street sewer which is diverted to the Bridge Street Pumping Station.

The second area is served by storm and sanitary sewers discharging through a 42-inch circular sewer into a junction manhole located in the Bridge Street sewer adjacent to the Bridge Street Pumping Station. During high river stages this flow is diverted with the flow from the Bridge Street sewer into the Bridge Street Pumping Station.

(2) Pumping Station. - The pumping station, constructed of reinforced concrete for the substructure and having a superstructure of structural steel and brick with glass block window panels, houses three 30-inch propeller pumps and one 16-inch volute pump with space provisions for a fourth 30-inch propeller pump. The riverside wall of the station forms a part of the flood wall and is joined to the flood wall at each end. No provision for pondage or back-up storage is provided in addition to the capacity of the wet sump. The 16-inch pump is in a dry sump and takes water directly from the intake structure.

(3) Pumping Station Equipment. (a) Switchboard. - Electric energy to the pumping station is 208/120 volts, 3 phase, 4 wire, and is fed by an underground feeder from an underground power line terminating in a manhole near the front of the building. The feeder terminates at the incoming service switch in the boiler room. One circuit feeds through this service switch to the main incoming circuit-breaker on the switchboard for station power circuits. Another circuit for station lighting is tapped off the incoming feeder on the line side of the switch and feeds through the small service switch to a switch on the switchboard. The lighting circuit is separated from the power circuit for metering purposes so that the most economical rates of the Power Company may be utilized.

The switchboard is a dead front, fully inclosed switchboard with manually operated air-circuit breakers for the control and protection of all feeders emanating from the switchboard. The switchboard contains a voltage regulator for the gasoline-electric generator unit, a battery charger for all engine batteries, and the adjustable speed control for the 16" pump.

The main air circuit breaker on the incoming power feeder is interlocked by means of mechanical linkage with the main air circuit breaker on the generator feeder so that only one can be closed at any time.

A drum controller, providing five different speeds varying from half to full speed for the 16" pump, is mounted in the switchboard with the secondary resistors mounted on the wall in the rear of the board. These resistors are designed so that the pump may be operated continously at any speed without damage to the resistors. The magnetic contactor, operated by the push-button statiom, is interlocked with the lowest speed of the controller so that the pump cannot be started unless the drum controller is in the starting position, thus inserting a maximum of resistance in the rotor circuit of the 16" pump motor.

The battery charger is a copper-oxide unit with a rated output of sixty amperes at twelve volts, D.C. Both the primary and secondary are protected by fuses located within the switchboard inclosure.

(b) Gasoline-Electric Generator Unit. - The gasoline-electric driven generator has a rated output of 93.8 KVA at 80% power factor and has sufficient capacity to power all electrical equipment and lighting in the pumping station.

(c) Sluice Gates. - Two sluice gates are provided, one outside the pumping statiom which closes the gravity conduit to the river and the other inside the pumping station which closes the inlet to the wet sump for the 30-inch pumps. These gates are electrically operated, controlled by a push-button station at each gate hoist and are provided with limit switches to stop the gates at their maximum limits of travel.

(d) 16-Inch Pump. - The 16-inch sewage pump is electrically driven and is designed to handle all undiluted sewage flows. The adjustable speed control is provided for the pump motor so that the capacity of the pump may be varied to suit the sewage inflow. A flap valve is provided on the discharge of the sewage pump to facilitate starting of the pump and prevent back flow. A gate valve is provided on the pump intake, and one on the pump discharge to permit dewatering of the pump at any time for purposes of cleaning and repair.

(e) 30-Inch Propeller Pumps. - The three 30-inch propeller pumps are gasoline-engine driven. Flap valves are provided on the discharge of these pumps to facilitate starting and prevent back flow. Gate valves are installed in the discharge for use in the event that a flap valve becomes damaged by debris or does not fully close.

(f) Sump Pump. - A sump pump is installed in the wet sump so that it may be dewatered for cleaning or pump maintenance purposes. This pump is controlled from a push button station on the engine room wall, adjacent to the pump motor. The pump discharge line is equipped with a gate valve on the pump discharge inside the pumping station.

(g) Emergency Water. - The sump pump is provided with emergency connections to furnish a cooling water supply to the gasoline engines in the event of failure of the water supply from the municipal system. The discharge of the pump may be connected to the engine-cooling water system through a swing connection arranged so that it is impossible for any of the discharge from the sump pump to get into the town water supply system.

(h) Trash Racks. - Movable trash racks are provided in the intake structure to screen out any large objects that might damage or clog the pumps during pumping operations. Manual hoists are provided for the racks so that the racks may be raised to facilitate cleaning and maintenance.

(i) Heating System. - An oil-fired low-pressure steam heating system is provided to eliminate the necessity of draining the complete water system after each maintenance routine in the winter months, to facilitate starting engines, and to prevent the severe humidity conditions that would prevail without a heating system.

c. Circuit Avenue Pumping Station. (See Plates XXXIX to XLI). (1) System. - The Circuit Avenue Pumping Station has a tributary drainage area of 528 acres and is located at the lower end of an existing oxbow lagoon. The drainage to the oxbow lagoon is by natural channels and a few small storm drains from nearly ground occupied by the Eastern States Exposition. The storage capacity of the oxbow lagoon is 90 acre-feet between Elevation 48.0 and Elevation 50.0 mean sea level datum.

(2) Pumping Station. - The pumping station, constructed of reinforced concrete for the substructure and having a superstructure of structural steel and brick with glass block window panels, houses two 24-inch volute pumps. The station is equipped to pump from the Oxbow pond and discharge into the conduit leading through the dike into the Westfield River. The purpose of the storage pond is to provide a means of storing any excess of runoff that the pumping capacity of the station will not handle at times of maximum runoff. During flood operation, pumps should be operated to maintain the water surface in the pond in accordance with the schedule given in paragraph 7-03-b (1) (c).

(3) Pumping Station Equipment. - (a) Electric Supply.- Electric power is furnished the station by an underground 115/230 volt service from the power company. The supply feeds through a service switch, a two-pole, double-throw switch and to the distribution panelboard. The double-throw switch is provided to allow an auxiliary power supply to be connected at a future date if desired. The distribution panelboard controls the lighting, receptacle, battery charger and sump pump circuits.

Revised June 1951

(b) Sluice Gate. - A manually operated sluice gate is provided at the intake to the conduit through the dike to shut off the river from the storage pond at high river stages and permit use of the conduit as a pressure conduit for the pump discharge.

(c) Pumps. - The 24-inch volue pumps are driven by gasoline engines through right angle gear units. The pumps are provided with a check valve in the discharge of each to facilitate pumping operations, and are also provided with a gate valve in each pump intake and each pump discharge to permit maintenance and repair work on the pump at any river or storage pond elevations.

(d) Sump Pump. - A sump pump is provided in a pit in the pump room for use in keeping the room dewatered. The pump is float controlled and operates automatically when the feeder to it is energized.

(e) Heating System. - An oil-fired warm air heating system is provided to eliminate the necessity of draining the complete water starting engines, and to prevent the severe humidity conditions that would prevail without a heating system.

d. Wayside Pumping Station. (See Plate XLIX)- (1) System.- A total area of 122 acres, approximately 3,300 feet by 3,500 feet drains to the station. The area includes partially developed residential, commercial and farm lands. The drainage area is served by storm and sanitary sewers which normally discharge through a 42-inch R.C. pipe into the river at the Chicopee Bridge. During flood operation this combined flow is diverted to the pumping station where it is pumped to the river through a 24-inch cast iron pipe.

(2) Pumping Station. - The pumping station, constructed of reinforced concrete for the substructure and having a superstructure of structural steel and brick, houses one 16-inch and one 12-inch volute pump. The station pumps storm and sanitary flow from a 42-inch sewer and discharges it into the conduit passing through the dike to the Connecticut River. A storage pond is provided at the station for storing any runoff in excess of the pumping capacity of the station. The storage pond should be kept unwatered at all times to provide adequate storage capacity.

(3) Pumping Station Equipment. - (a) Electric Supply - Electric power is furnished the station by an underground 120/240 volt, single phase, 3 wire, 60 cycle service from the power company. The supply feeds through a service switch and metering equipment to the distribution panelboard. The panelboard controls the lighting, receptacles, battery charger, vent fan and sump pump circuits.

(b) Pumps. - The pumps are driven by gasoline engines, through right angle gear units. A check valve is provided in the discharge of each

pump. Gate valves in the intake and discharge of each pump are provided to permit maintenance and repair work on the pump at any river stage.

(c) Sump Pump. - A sump pump is provided in a pit in the pump room for use in keeping the room dewatered of any seepage. A valved connection between the pit and the suction chamber also permits use of the sump pump for draining the suction chamber. The pump is float-controlled and operates automatically when the electric circuit is energized.

(d) Sluice gate. - An 8 inch sluice gate is provided for gravity flow from the suction chamber and storage pond during low river stages.

(e) Heating System. - A gas fired unit heater is provided for heating the station to prevent the severe humidity conditions that would prevail without heat and to facilitate starting the engines and maintenance of equipment.

e. Riverdale Pumping Station. (See Plate LI)- (1) System. - A total area of 548 acres, roughly 6,000 feet by 6,000 feet drains to the Riverdale Pumping Station. The area includes partially developed residential, commercial and farm lands. The drainage area is served by separate storm and sanitary sewers. Flow from a 36-inch concrete storm sewer in Riverdale Road and a 24-inch collector drain along the dike is carried in a 42-inch R.C. pipe to the pumping station. This flow normally discharges by gravity or, during flood operation, is pumped through the 3'-0" x 4'-6" reinforced concrete conduit. The sanitary flow normally discharges through a 24-inch sewer into the river. During flood operation, this flow is diverted to the station and pumped to the river through a 12-inch cast iron and 24-inch v.c. sewer.

(2) Pumping Station. - The pumping station, constructed of reinforced concrete for the substructure and having a superstructure of structural steel and brick, houses one 24 inch and one 14 inch volute pump. The 14 inch pump is provided for pumping the sanitary sewerage and the 24 inch pump is for handling the storm water during high river stages. A storage pond constructed adjacent to the station provides storage for any runoff in excess of the pumping capacity.

(3) Pumping Station Equipment. - (a) Electric Supply. - Electric power is furnished the station by a 120/240 volt, single phase, 3 wire, 60 cycle service from the power company. Each service is metered separately. The single phase service supplies a distribution panel serving the lighting circuits and the 3 phase service supplies the power panelboard serving the 14 inch pump, sump pump, sluice gate, and battery charger.

(b) Pumps. The 24 inch pump is driven by a gasoline engine through a right angle gear unit. The 14 inch pump is driven by a variable speed wound rotor electric motor. A check valve is provided in the discharge of each pump. Gate valves in the intake and discharge of each pump are provided to permit maintenance and repair work on the pump at any river stage.

(c) Sluice Gate. - A 36" x 54" motor operated sluice gate is provided in the conduit adjacent to the station to shut off the river from the suction chamber and the storage pond at high river stages and permit use of the conduit as a pressure conduit for pump discharge.

(d) Cross Connection. - An 18 inch pipe with an 18-inch gate valve is provided between the sanitary sewer and storm sewer suction chambers to permit the use of either pump for handling the flow from both systems in the event that one pump is broken down.

(e) Sump Pump. - A sump pump is provided in a pit in the pump room floor for use in keeping the room dewatered of any seepage. A valved connection between the pit and the suction chamber also permits use of the sump pump for draining the suction chamber. The pump is float controlled and operates automatically when the electric circuit is energized.

(f) Heating System. - A gas fired unit heater is provided for heating the station to prevent the severe humidity condition that would prevail without heat and to facilitate starting the engines and maintenance of equipment.

8-02. LIST OF PRINCIPAL EQUIPMENT AND NAME PLATE DATA. - The following major items of equipment with description and name plate data are listed for ready reference and use in corresponding with the equipment manufacturers.

a. Warren Street Pumping Station:

(1) 36-inch Pumps: (3 installed)

Fairbanks Morse & Co., Vertical Propeller Type, 31,000 GPM at 18 feet total head.

(2) Gear Units for 36" Pumps: (3 installed)

Universal Gear Corp., Model PRV-20--
Ratio 2.25 to 1.

(3) Gasoline Engines for 36" Pumps: (3 installed)

Buffalo Motor Co., 6 cylinder--6-1/2" x 7",
Type 6RAB--1200 RPM--216HP

(4) Sluice Gates: (2 installed)

Chapman Valve Mfg. Co.
Motor operated.

(5) Sump Pump:
Size 1-1/2
1 HP, General Electric Motor

b. Bridge Street Pumping Station:

(1) 30-inch Pumps: (3 installed)

Worthington Pump and Mach. Corp.
Vertical Propeller Type
1900 GPM at 22 feet total head

(2) Gear Units for 30" Pumps: (3 installed)

Universal Gear Corp.
Model PRV-20--Ratio 1.82 to 1

(3) Gasoline Engines for 30" Pumps: (3 installed)

Climax Engineering Co.
6 cylinder--6" x 7"
Model R6I--1200 RPM

(4) 16-inch Volute Pump:

Worthington Pump & Mach. Corp.
Vertical Mixed Flow
6500 GPM at 22 feet total head

(5) Electric Motor for 16" Pump:

Westinghouse Electric Corp.
50 H.P.- Wound Rotor

(6) Gasoline Electric Generator Unit:

(a) Gasoline Engine:

Climax Engineering Co.
6 cylinder--6" x 7"
Model R6I--1200 RPM

(b) Generator:

General Electric Co.
3 phase--120/208 volts

(7) Sluice Gates: (2 installed)

Chapman Valve Mfg. Co.
Motor Operated

(8) Sump Pump:

Worthington Pump & Mach. Corp.
Size 3--3 HP Westinghouse Motor

c. Circuit Ave. Pumping Station:

(1) 24-inch Volute Pumps: (2 installed)

Worthington Pump & Mach. Corp.
Vertical Mixed Flow
1200 GPM at 26 feet total head

(2) Gear Unit for 24" Pumps: (2 installed)

Universal Gear Corp.
Model PRV-20--Ratio 2.81 to 1

(3) Gasoline Engine for 24" Pumps: (2 installed)

Climax Engineering Co.
6 cylinder--6" x 7"
Type R6I--1200 RPM--180 HP

(4) Sump Pump:

Size 1-1/2-- 1 HP Motor

d. Wayside Pumping Station:

(1) 16" Volute Pump:

Economy Pump Co.
Vertical Mixed Flow
5500 GPM at 25 foot head

(2) Gear Unit for 16" Pump:

Universal Gear Corp.
Model PRV-10--Ratio 1 to 1

(3) Gasoline Engine for 16" Pump:

Climax Engineering Co.
4 cylinder--6-1/8" x 7"
Type R4I--650RPM

(4) 12" Volute Pump:

Economy Pump Co.
Vertical Mixed Flow
2900 GPM at 25 foot head

(5) Gear Unit for 12" Pump:

Universal Gear Corp.
Model PRV-10--Ratio 1 to 1

(6) Gasoline Engine for 12" Pump:

Climax Engineering Co.
4 cylinder--6-1/8" x 7"
Type R4I--867 RPM

e. Riverdale Pumping Station:

(1) 24" Volute Pump

Economy Pump Co.
Vertical Mixed Flow
16000 GPM at 26 foot head

(2) Gear Unit for 24" Pump:

Universal Gear Corp.
Model PRV--Ratio 3 to 1

(3) Gasoline Engine for 24" Pump:

Climax Engineering Co.
6 cylinder--6" x 7"
Type R6I--1200 RPM--180 HP

(4) 14-inch Volute Pump:

Economy Pump Co.
Vertical Mixed Flow
4600 GPM at 26 feet total head

(5) Electric Motor for 14" Pump:

Westinghouse Electric Corp.
40 HP-Wound Rotor

(6) Sluice Gate

Chapman Valve Mfg. Co.
Motor Operated

(7) Sump Pump:

Size 1-1/2

8-03. MAINTENANCE. - a. The following quotations from the regulations govern the maintenance of pumping stations:

"Pumping plants shall be inspected by the Superintendent at intervals not to exceed 30 days during flood season and 90 days during off-flood seasons to insure that all equipment is in order for instant use. At regular intervals, proper measures shall be taken to provide for cleaning plant, buildings, and equipment, repainting as necessary, and lubricating all machinery. Adequate supplies of lubricants for all types of machines, fuel for gasoline or diesel powered equipment, and flash lights or lanterns for emergency lighting shall be kept on hand at all times. Telephone service shall be maintained at pumping plants. All equipment, including switch gear, transformers, motors, pumps, valves, and gates shall be trial operated and checked at least once every 90 days. Megger tests of all insulation shall be made whenever wiring has been subjected to undue dampness and otherwise at intervals not to exceed one year. A record shall be kept showing the results of such tests. Wiring disclosed to be in an unsatisfactory condition by such tests shall be brought to a satisfactory condition or shall be promptly replaced. Diesel and gasoline engines shall be started at such intervals and allowed to run for such length of time as may be necessary to insure their serviceability in times of emergency. Only skilled electricians and mechanics shall be employed on tests and repairs. Operating personnel for the plant shall be present during tests. Any equipment removed from the station for repair or replacement shall be returned or replaced as soon as practicable and shall be trial operated after reinstallation. Repairs requiring removal of equipment from the plant shall be made during off-flood seasons insofar as practicable."

b. General. - Proper maintenance of the pumping stations requires periodic operation of all equipment at frequent intervals to keep equipment in good working order and all parts well lubricated and free from corrosion. Periodic operation of equipment also permits an inspection of the functioning of all equipment so that defective parts may be properly replaced or repaired before their use is required for pumping operations. Inasmuch as mechanical and electrical equipment deteriorates more rapidly from idleness than from continued use, a thorough and complete maintenance routine is justified.

The heating systems should be kept in operation during the colder months to prevent freezing of water in pipes and cooling water jackets, and also to prevent condensation of moisture on equipment within the building.

c. Gasoline Engines:

(1) Operate the pump engines, with the flexible coupling between the engine and gear unit disconnected, for one-half hour every two weeks at a speed of 600 R.P.M. Do not exceed this speed, except for

short periods of time, without a load on the engine. At the end of the half-hour run, open the throttle wide to operate and check the governor for not more than 30 seconds without load. During high river stages this maintenance run shall be made weekly.

(2) Operate the gasoline electric generator unit at the Bridge Street Pumping Station for a half hour every two weeks at approximately 1200 R.P.M.

(3) Check the functioning of the engines and all accessories during the half hour operating period, (1) and (2) above. The principal items to be checked are:

(a) Cooling water temperature.

(b) Oil pressure.

(c) Ignition - check each ignition circuit separately.

(d) Heating of cylinder blocks - place hand on different portions of each block. Temperature should be approximately equal.

d. Pumps and Gear Units:

(1) Following the half hour maintenance run of the engines, connect the flexible coupling between the engine and gear unit and operate each pump for about 10 seconds with the engines operating at 600 R.P.M. This will lubricate the gear unit bearings and gear teeth and spread a film of oil or grease over the pump and shaft bearings. Do not operate the pumps for more than 15 seconds without water in the pump casing as serious damage to the pump will result.

(2) Briefly energize the electric motor on the electric motor driven pumps every two weeks for about 10 seconds only. This will spread a film of oil over the motor and pump bearings.

(3) Inspect the impellers of each pump after it has been used for pumping and remove any debris that is lodged on or around the impeller.

e. Electrical:

(1) Once each month operate all electrical equipment in the station for short periods. This includes fans, ventilators, sump pumps, and sluice gates (unless operating sluice gates would admit sewage into a clean area). This will permit check of the miscellaneous equipment and provide a load for the generator at the Bridge Street Pumping Station.

(2) Check switchboard completely once each year. Clean insulators, check and tighten all lugs and connections. Check ground connections for continuity.

(3) Clean commutators and rings of motors and generators once each year.

(4) Measure the resistance of all cables and motors once each year and record results together with temperature. Convert resistance values to a reference temperature and plot on a chart to show any change in condition of circuits and equipment from year to year. When any appreciable downward trend is observed in these insulation resistance values, an investigation should be made to determine the cause and corrective action taken. This will uncover the defects prior to actual breakdown. See Paragraph (5) below for tests on 40 h.p. motor at Riverdale Pumping Station. Tests data on the 16 inch pump motor in the Bridge Street Pumping Station, at the time of manufacture, are not available.

(5) Plate LIV is a curve on semi-logarithmic graph paper showing the insulation resistance versus temperature at time of manufacture for the stator and rotor windings of the 40 h.p. motor in the Riverdale Pumping Station. Measure the insulation resistance of the motor windings every six months and plot results as follows:

Plot the measured value of the insulation resistance and the temperature at which it was measured on Plate LIV and draw a line through the plotted point parallel to the line on the plate. Read the insulation resistance value at point where the new line crosses the vertical line representing 60° C and plot this resistance value against time on Plate LV. This resistance obtained for each test and plotted on Plate LV will show any deterioration of the insulation. When any appreciable downward trend is observed in these insulation resistance values, an investigation should be made to determine the cause and corrective action taken. This will uncover the defects prior to actual breakdown.

f. Gate Valves and Sluice Gates:

(1) Raise and lower each sluice gate a short distance every two weeks if their opening will not admit sewage into a clean area.

(2) Partially open and close each hand-operated gate valve on the pumps once each month.

(3) Inspect sluice gate sills each month and remove any accumulated silt and debris.

g. Storage Batteries:

(1) Keep batteries fully charged at all times. The specific gravity of the batteries at full charge is between 1.210 and 1.225.

(2) Keep batteries properly filled with distilled water.

(3) Keep tops of batteries and battery cables clean and free from dirt, grease and moisture.

h. Fire Protection Equipment:

(1) Weigh each carbon dioxide cylinder every six months. The gross weight of each cylinder, fully charged, is stamped on the cylinder. If gross weight is less than that stamped on the cylinder, have the cylinder recharged promptly.

i. Heating System: - Clean the boiler and have the oil burner and controls checked and adjusted each fall by a competent oil burner mechanic.

j. Plumbing System: - If, due to the failure of the heating system in cold weather, it becomes necessary to drain all water in the building, the following steps should be taken:

(1) Open drain valve at low point in water lines.

(2) Open gate valves and quick-opening valves in water supply lines at all engines.

(3) Open all petcocks on engines.

(4) Drain flexible water cooled exhausts on engines.

(5) Drain sanitary fixtures and open all traps.

(6) Drain boiler and heating system.

k. Anchor Bolts: - Check and tighten all anchor bolts, pipe flange bolts, pump assembly bolts, and all similar parts each year.

l. Painting: - All metal surfaces not otherwise protected shall be kept painted to maintain the metal free from rust. The exterior metal work, such as pipe railings, trash racks, cover plates, exterior gate hoists, etc., require frequent painting because of exposure to the weather. Use a high temperature paint on the silencers.

m. Lubrication: - The two main requirements to keep equipment well lubricated are to operate equipment frequently to spread a film of lubricant over the bearing surfaces, and secondly to use proper kinds and grades of good lubricants. As greases cake and harden in time, bearings should be dissembled periodically, cleaned, and repacked with fresh grease. Cup greases should not be used on the equipment for any purpose because most cup greases have water as a binder. This moisture in contact with idle metal surfaces will corrode them in time.

The following is a tabulation of the types and grades of lubricants to be used on the equipment in the pumping station and the intervals between their application and change.

(1) Heavy duty detergent-type oil meeting U.S. Army specifications 2-104B and having a viscosity as recommended by the engine manufacturer should be used. Change oil and clean oil filter every six months - preferably just before pumping operations in the spring and again in the fall.

After every thirty hours of operation a few drops of light bearing oil should be applied to the oil cups, and the grease cups turned down or refilled with a light pressure grease.

(2) Gear units. - A good grade of automotive oil should be used. Change oil and clean oil filters every two years.

(3) Volute pump. - The use of Keystone Velox No. 3 grease for the shaft packing gland on the pumps is recommended. The cups should be turned down a little after every few hours of operation and refilled when empty.

The grease cups on the pump bearings and the steady bearing should be filled with a light ball bearing grease. The grease cups on these bearings should be turned down, but only a little, after every thirty hours of operation. Anti-friction bearings will fail just as rapidly because of too much grease as from too little.

The bearings on the volute pump and the steady bearing should be disassembled every three years, cleaned, and covered with a film of grease.

(4) Motor and generator bearings. - A good bearing oil SAE-20 should be used in the sleeve bearings of the generators, the bearings of the volute pump motor, and the bearings of the small motors throughout the pumping station. The generator bearings and volute pump motor bearings should be drained, flushed out with kerosene, and refilled every two years.

(5) Crane. - The grease fittings on the cranes should be lubricated once a year with a pressure grease.

(6) Sump pump. - Once a month grease all pump fittings with Keystone Velox No. 3 grease, using a high pressure grease gun.

n. Manufacturer's Drawings and Recommendations: (1) The Corps of Engineers has furnished the Town of West Springfield a complete set of manufacturer's drawings pertaining to the mechanical and electrical equipment in the pumping station, and copies of factory acceptance test on the equipment. The drawings should be kept in good condition and available for reference at all times. If, for any reason, the drawings become damaged

or lost they should be replaced. The manufacturers will replace drawings for a nominal cost.

(2) The manufacturers' Operating and Maintenance Instructions should be followed for care of the various items of equipment.

8-04. OPERATION. - a. General. - The following quotations from the regulations govern the operation of pumping stations:

"Competent operators shall be on duty at pumping plants whenever it appears that necessity for pump operation is imminent. The operator shall thoroughly inspect, trial operate, and place in readiness all plant equipment. The operator shall be familiar with the equipment manufacturer's instructions and drawings and with the Operating Instructions for each station. The equipment shall be operated in accordance with the above-mentioned Operating Instructions and care shall be exercised that proper lubrication is being supplied all equipment, and that no overheating, undue vibration or noise is occurring. Immediately upon final recession of flood waters, the pumping station shall be thoroughly cleaned, pump house sumps flushed, and equipment thoroughly inspected, oiled and greased. A record or log of pumping plant operation shall be kept for each station, a copy of which shall be furnished the District Engineer following each flood."

b. Warren Street Pumping Station. - (1) Electrical. - The following steps should be taken to energize the electrical circuits throughout the pumping station:

(a) Close main service switch on wall near switchboard.

(b) Close main circuit breaker on switchboard on lower section of panel.

(c) Read the voltage of each of the three phases by turning voltmeter switch to positions marked 1, 2 and 3.

(d) If voltage on each phase is approximately 230 volts on each phase the power supply is satisfactory and any of the electrical equipment may be used.

(e) Close circuit breakers on upper panels energizing feeders as desired.

(f) To energize lighting circuits throughout pumping station close circuit breakers on lighting panelboard near No. 1 Pump.

(g) The emergency lights, fed from the 12 volt storage battery of the No. 1 pump, are controlled by two switches at the left (facing outdoors) of the front door. Each circuit is fused in a fuse box recessed in the wall just below the switches.

(h) To charge one or more storage batteries close "Input" and "Output" circuit breakers in battery charging circuit at switchboard. Then close switch in battery charging circuit on engine panelboard of unit with battery desired to be charged. Any one of the batteries may be charged

individually or all may be charged simultaneously. The maximum capacity of the rectifier is 36 amperes. Batteries should be charged at a rate not exceeding 15 amperes per individual battery.

(2) 36-inch propeller pumps and engines. - See Paragraph 7-03b(1)(a) for pumping criteria. To start and operate one of the main pumping units the following steps should be taken:

(a) Open sluice gates and admit water to pump room. These pumps should never be run for more than one minure without water above the impellers because the bronze rings require water for lubrication.

(b) Turn pump oil lubricator fifteen revolutions manually to force some oil down to the pump bearings.

(c) Check oil level of engine.

(d) Check oil level of gear unit.

(e) Pump up gasoline by hand operated pump.

(f) Turn on cooling water to engine and wait until water discharges into drain.

(g) Set throttle about one half inch from fully closed position.

(h) Close both ignition switches.

(i) Depress low-oil pressure cut-out switch with foot and hold down until engine starts and oil pressure has built up to ten pounds.

(j) Push "Start" button and choke as much as necessary to start engine and maintain speed when it starts at an even firing rate.

(k) Do not overchoke as this results in washing of lubrication from the cylinder walls and the dilution of the crankcase oil.

(l) Set throttle to maintain an engine speed of 600 R.P.M. and run at this speed for five minutes to allow engine to warm up.

(m) Check oil pressure on gear unit. If no oil pressure is indicated stop unit immediately and determine cause of lack of oil pressure.

(n) Check pump oil lubricator and adjust so that each oil feeder drops approximately 10 drops a minute.

(o) After five minute warm up period, open throttle fully. Governor will hold engine speed at 1200 R.P.M. regardless of load.

(p) If so desired, engine may be run at any speed desired up to the governed speed of 1200 R.P.M. by setting throttle to give desired pumping speed.

(3) Sump pump. - After the sump pump feeder is energized from the switchboard the sump pump may be started by pushing the "Start" button on the motor starter on the wall behind the sump pump. A swing connection is provided in the engine cooling water line above the engine room floor near the sump pump discharge so that in the event of failure of the municipal water supply the sump pump discharge could be used for engine cooling water. It is recommended that the sump pump discharge never be used for engine cooling water unless absolutely necessary as the silt and debris would lodge in the engine cooling water jackets.

(4) Sluice gates. - The two sluice gates on the entrance of the intake to the pump room are cast iron unseating pressure sluice gates. Each gate is provided with an electrically operated hoist having a handwheel for manual operation in the event of failure of electricity.

The gates are operated electrically by pushing the appropriate push-buttons on the gate hoists after the electrical feeders to the gate hoists have been energized from the switchboard. In emergency, the gate hoists may be operated manually by moving the control lever on the gate hoist to the "Manual" position. If difficulty is experienced in latching the handle in either the "Manual" or "Motor" position, the handwheel should be turned with one hand while moving the lever with the other hand.

The white light, when lighted, indicates that the gate hoist is ready for motor operation from the push-button station. If the white light is not lighted the control circuit is inoperative for reasons of which the following are the most common.

(a) Feeder is not energized at switchboard.

(b) Lever changing hoist operation from "Manual" to "Motor" is not fully latched in the "Motor" position.

(c) Overload thermal trips on motor starter panel have operated and open control circuit. This is probably caused by attempting to close gate with some foreigh material in bottom of gate opening. To reset these trips, open the door of the control panel and press button in lower left hand corner of box. If the overload trips have operated for any other reason than that of trying to close the gate against obstructions in the gate opening, the cause of the overload should be de-

termined and corrective measures taken.

If difficulty is encountered in closing the gate to the sump because of silt or debris at the bottom of the gate opening, the gate should be closed as far as possible, then a pump started and water pumped out until there is a two or three foot difference in head at the gate. Then by raising the gate a little it may be possible to wash out the gate opening thus allowing proper seating of the gate.

A limit switch on each gate stops the travel of the gate at the maximum open and closed position. At each fully open and fully closed position an indicating light shows the position of the gate and indicates that the limit switch has operated.

c. Bridge Street Pumping Station. - (1) Switchboard. - The switchboard controls the distribution of electric energy for power and lighting throughout the pumping station. Two service switches, located in the boiler room, are provided to de-energize the switchboard: one switch for the power feeder; the other for the light feeder. To energize the switchboard, throw both of these switches to the "ON" position.

(a) Lights and receptacles. - All lights and receptacles except the two flood lights are controlled from two panelboards. One panelboard is located on the engine room wall opposite the main entrance doors and near the stairway to the boiler room. This panelboard controls the lights and receptacles in the engine room and the lights in the wet sump. The second panelboard located on the wall of the boiler room adjacent to the boiler room stairs controls the lights and receptacles in the dry sump, the boiler room, the lavatory, and the rack room. The flood lights are controlled directly from the switchboard.

The two lighting panelboards and the floodlights are fed through a double throw-switch labelled "Light Selector Switch" and three additional switches labelled "Engine Room Lighting", "Boiler Room Lighting", and "Floodlights" respectively. The Light Selector Switch is located in the bottom section of the middle panel of the switchboard. The three switches for the individual lighting circuits are located on the right-hand panel of the switchboard. To energize the two lighting panelboards and the floodlight circuit from the outside power source, throw the Light Selector Switch to the position marked "Incoming" and energize the panelboards or the floodlights as desired by means of the Engine Room Lighting, Boiler Room Lighting or Floodlight Switch. After energizing the panelboards, the various lighting and receptacle circuits throughout the building may be energized at will by means of the switches in the panelboards.

To energize the two lighting panelboards and the floodlight circuit from the generator, throw the Light Selector Switch to position marked "Generator" and proceed as above.

(b) Power. - All electric energy except that for the lights and receptacles is fed through either one of two 300 amp - 600 volt - 3 pole air circuit breakers located in the two lower sections of the left hand panel of the switchboard. These are the so-called "main" breakers and are labeled "Incoming Line" and "Generator". They are mechanically interlocked so that only one breaker may be thrown to the "ON" position at any one time.

A red "bulls-eye" light on the Incoming Line Circuit breaker panel indicates, when lighted, that the incoming power line is energized to the switchboard. There are on the upper left hand panel two voltmeter switches and one voltmeter switch handle. One voltmeter switch reads both phase to phase and phase to neutral voltages on the Incoming Line, and the second switch reads similar voltages on the Generator Feeder. Only one voltmeter switch handle is provided to prevent short circuiting the two electric systems at the voltmeter. The voltmeter switch must be turned to the off position before the handle can be removed for use in the other switch.

To energize the power circuits at the switchboard from the outside power source, place the main breaker labeled "Generator" in the "OPEN" position and throw the main breaker labeled "Incoming Line" to the "ON" position. Read the phase to phase voltages on the incoming power line by turning the handle in the voltemeter switch marked "Incoming Line" to each of the three positions on the right. If voltage readings of approximately 208 volts are obtained the circuit breakers on the right hand panels may be closed thus energizing the various power feeders throughout the building.

If satisfactory voltage readings are not obtained, the gasoline-electric generator must be used. To energize the power circuits at the switchboard from the generator, place the main breaker labeled "Incoming Line" in the "OPEN" position and throw the main breaker labeled "Generator" to the "ON" position.

(c) Voltage regulator. - The voltage regulator for the generator is a Westinghouse "Silverstat" and is mounted within the switchboard. The operation of it is automatic when properly adjusted. The voltage regulator operates upon changes of generator voltage and varies the resistance in the exciter shunt field circuit thus holding the voltage of the generator constant.

The large Exciter Field Rheostat on the switchboard has been set at the proper position for the operation of the voltage regulator and should be kept in this position. The proper position of the Exciter Field Rheostat is indicated by a mark on the front of the switchboard.

Any adjustment of the generator voltage should always be made by the small knob on the switchboard marked "Voltage Adjusting Rheostat". This should be set so that the phase to phase voltage of the generator as indicated on the switchboard is 208 volts.

If the voltage regulator fails to operate properly and does not hold the generator voltage constant then the following procedure may be used until the voltage regulator is repaired. Turn the Exciter Field Rheostat to the extreme "Lower" position; turn the voltage Adjusting Rheostat to the extreme "Raise" position; then turn the Exciter Field Rheostat until the voltage of the generator is 208 volts. The voltage regulator is now out of operation and the generator voltage must be controlled manually by the Exciter Field Rheostat. Each time the load on the generator is changed the operator must readjust the Exciter Field Rheostat to hold the generator at 208 volts.

(d) Battery Charger. - A copper-oxide battery charger is provided in the switchboard to maintain the engine storage batteries fully charged. To operate the battery charger the operator should first turn both of the battery-charging adjusting rheostats to the extreme low position - then close both circuit breakers on the switchboard in the battery charging circuit.

The engine storage batteries are connected in parallel across the battery charger and a switch provided in the negative, or ungrounded wire at each engine. Any one of the engine batteries may be charged individually or all may be charged simultaneously by closing the individual switches at the engine bases. With these switches closed as required the battery-charging adjusting rheostats on the switchboard may be adjusted to the proper charging rate. These rheostats will vary the charging rate from 0 to 60 amperes, the maximum capacity of the rectifier. The charging rate should be adjusted so that no individual battery is being charged at a rate of over 15 amperes.

Both the primary and the secondary of the battery charger are protected by fuses located in the interior of the switchboard. If the battery charger fails to operate these fuses should first be checked for failure.

(2) Gasoline-Electric generator unit. - When starting the gasoline-electric generator unit the operator should first pump up the gasoline by means of the hand gasoline pump. The operator can judge when the gasoline lines of the engine are filled by the increased resistance to the movement of the gasoline pump handle. Next, the engine cooling water should be turned on by opening both the gate valve in the pipe feeding the engine and the quick-opening valve on the engine. It is recommended that the gate valve be always open and that the handle be removed and used only in emergencies. The quick-opening valve should be securely locked in the open position by the thumbscrew as this valve has

an electrical interlock in the starting push-button circuit of the engine that prevents the engine from being cranked electrically if the valve is not wide open. The cooling water discharges from the engine into an open funnel directly below the water-jacketed flexible exhaust. This arrangement provides a positive visual indication of the flow of the cooling water. The spark control is interlocked with the control of the starting motors so that the starting motors cannot operate unless the spark is fully retarded. There are two ignition switches on the engine panelboard-one in the magneto ignition circuit and one in the battery ignition circuit. There is also a reset switch which must be in the "ON" position when operating and in the "OFF" position when shut down. The engine is provided with automatic oil and water safety shut down devices which interrupt the ignition circuits in the event of low oil pressure or high water temperature.

To start the engine the procedure outlined below should be followed:

(a) Pump up gasoline.

(b) Turn on water - Lock quick-opening valve in open position.

(c) Turn on ignition switches.

(d) Turn reset switch to "ON" position.

(e) Set throttle about one-half inch from fully closed position.

(f) Retard spark.

(g) Press starting pushbutton.

(h) When engine fires, remove hand from starting button and watch automatic choke to make sure it returns to normal position. If engine does not start immediately close choke partially to prevent flooding of carburetors.

(i) Advance spark.

(j) Inspect cooling water discharge to be certain that cooling water is circulating properly.

(k) Set engine throttle to maintain a speed of 600 R.P.M. and allow engine to idle at this speed for 5 minutes.

(l) Advance throttle to wide open position.

(m) Governor should hold speed of engine at 1200 R.P.M.

The thermostatically controlled water valve in the water supply line to the engine should be adjusted so that the normal temperature of the water as indicated on the thermometer on the engine is 160 degrees F.

(3) 16-inch pump. - See paragraph 7-03b(1)(b) for pumping criteria. Before starting the 16-inch pump the operator should make sure that the pump is primed. This may be ascertained by opening the gate valve on top of the discharge section of the pump. If the pump is primed water will flow out of this valve. If the pump is not primed the opening of this valve will allow all air in the pump to escape provided there is a head of water on the pump. When all air has been expelled from the pump and water flows from this valve, the valve may be closed and pump operation begun.

The operation of the pump is controlled from the switchboard. To start the pump, the circuit breaker feeding the pump controller should first be placed in the "ON" position. Then the pump may be started by turning the speed controller to the "OFF" position and pressing the "Start" button of the push-button station on the switchboard. The pump may now be brought up to speed by turning the speed controller onenotch at a time, allowing approximately five seconds to elapse between steps.

In the event of a sustained overload on the pump, a thermal trip in the switchboard will stop the motor. After the cause of the overload has been determined and corrective measures taken, the "Reset" button on the switchboard should be momentarily depressed and then the motor may be started as instructed above.

The stuffing box on the pump should be adjusted so that a small trickle of water leaks through all the time the pump is in operation. If the pump has been dry for a long period of time, the stuffing box will leak considerably when the pump is first filled with water. However, since the packing expands when wet, care should be exercised when starting the pump after a long inoperative period to see that the stuffing box packing does not swell sufficiently to bind the pump shaft.

The grease cups on the pump and steady bearing should be turned down a bit after every few hours of operation. Only a little grease should be fed to these bearings as too much grease is injurious to anti-friction bearings.

The pump should never be operated for more than thirty seconds without water in it as the wearing rings in the pumps are built with very close tolerances and depend on water for lubrication.

(4) 30-inch propeller pumps. - Whenever the inflow to the station exceeds the capacity of the 16-inch pump, one or more of the 30-inch propeller pumps should be used. Water is admitted to the wet sump by opening the sluice gate in the trash rack room.

If the pumps have been idle for a few weeks or more, the pipe cap should be removed from the oil fill pipe that feeds the pump shaft cover pipe and about one-half pint of oil poured into the pipe. This oil fill pipe is located near the automatic lubricator on the pump base. The automatic lubricator furnishes lubrication to the pump bearings during operation and should be adjusted to feed at the rate of approximately 10 drops of oil a minute. The purpose of pouring some oil in the fill pipe prior to starting the pumps after a period of inoperation is to insure adequate lubrication of the pumps at the time of starting.

The pump engines are equipped with both a hand gasoline pipe to supply gasoline to the carburetors before starting, and a hand oil pump to fill the lubrication system of the engine with oil prior to starting, to eliminate the scouring of cylinders and bearings which occurs when starting the engine without a film of oil on the moving parts. In starting an engine the gasoline should first be pumped up by the use of the hand-operated gasoline pump. The operator can judge when the gasoline lines are full by the increased resistance to the movement of the pump. The lubricating oil should be pumped up by operating the hand oil pump similarly to the hand gasoline pump until five pounds of oil pressure is registered on the oil gage at the engine panel board.

Next, the cooling water should be turned on by opening the gate valve in the cooling water line just above the engine base and opening the quick-opening valve in the cooling water line and locking it in the open position by means of the thumb-screw on top of the shaft. The gate valve mentioned above should be always in the open position and the handle removed and used only in emergencies. The quick-opening valve is connected to an electrical switch in series with the starting push-button circuit making it impossible to crank the engine unless the valve is securely locked in the open position. The cooling water discharges from the engine into an open funnel directly below the water-jacketed flexible exhaust. This arrangement provides a positive, visual indication of the flow of cooling water.

A spark lever on the engine is also connected to an electrical switch in series with the starting pushbutton circuit making it impossible to crank the engine electrically unless the spark is properly retarded.

There are two ignition switches on the engine panelboard and two spark plugs in each cylinder. Each ignition switch controls the ignition of one plug in each cylinder through one of the two ignition coils.

The engine is provided with automatic oil and water safety shutdown devices and an overspeed switch which interrupt the ignition circuits in the event of low oil pressure, high water temperature, or excessive speeds respectively. To short circuit the oil pressure switch to permit starting, a foot-operated switch has been provided at the base of the engine.

To start each engine the procedure outlined below should be followed:

(a) Pump up gasoline.

(b) Pump up oil pressure

(c) Turn on water. Lock quick-opening valve in open position.

(d) Retard spark lever.

(e) Set throttle about one-half inch from fully closed position.

(f) Turn on ignition switches.

(g) Press foot switch.

(h) Press starting pushbutton. Close choke at same time.

(i) When engine fires, remove hand from starting button, and return choke to normally open position as far as possible without engine stalling.

(j) Advance spark.

(k) Inspect cooling water discharge to be certain that cooling water is circulating properly.

(l) Set engine throttle to maintain a speed of 600 R.P.M. and allow engine to idle for five minutes.

(m) Advance throttle to wide open position.

(n) Adjust thermostatic valve on cooling water to maintain a water temperature as indicated.

(5) Sluice gates. - Two sluice gates have been provided at the station: one to admit water into the wet sump; and one to close off the gravity flow conduit from the river. The sluice gates are cast iron of the seating pressure type. Each gate is electrically operated by means of a motor driven gate hoist. Each hoist is provided with a hand wheel for manual operation in cases of emergency.

The operation of the sluice gates is the same as for those in the Warren Street Pumping Station as outlined in 8-03b(4).

(6) Sump pump. - The sump pump is operated from a pushbutton station adjacent to the pump motor on the engine room wall. This pushbutton station is energized from the switchboard by means of a switch labelled "Sump Pump Motor". The sump pump is for use in dewatering the wet sump after the level of water in the sump has been drawn down as far as possible with one of the propeller pumps.

The sump pump may also be used as a source of emergency cooling water for the pump engines and the standby unit in the event of failure of the municipal water supply system. The connection between the sump pump and the engine cooling water system is a swing connection so arranged that it is impossible for the discharge from the sump pump to get into the municipal water supply system.

(7) Heating and ventilating. - An oil fired heating system is provided to maintain temperatures above freezing in the pumping station at all times and to reduce the relative humidity of the air for the protection of equipment from corrosion. A thermostat in the operating room controls the operation of the boiler, and pressuretrols at each unit heater control the operation of the unit heaters. Thus, when the temperature of the operating room falls below that temperature for which the thermostat is set the oil burner starts. A pressuretrol on the boiler acts to maintain a pressure of between 2 pounds and 5 pounds of steam in the boiler at all times the thermostat is calling for heat. As soon as the steam reduces the unit heaters the pressuretrols operate to start the unit heaters and maintain them in operation until there is no more steam reaching the units. A fuel oil pump and day tank are located in the boiler room wall. This unit pumps oil from the underground storage tank into a small day tank from which the oil feeds by gravity to the oil burner. This pump is float controlled. Should the day tank run dry, the pump, after the tank is refilled, must be started manually by means of a switch located on top of the pump. A cutout switch controlling the fuel oil pump and oil burner is located on the boiler room wall near the stairs. This switch may be turned "OFF" to perform repair or maintenance work on the heating equipment in the boiler room.

The ventilating equipment consists of the wet sump ventilating blower, the rack room ventilating fan, and the engine room roof ventilator.

The heating and ventilating equipment are divided into two circuits electrically. Each circuit is controlled by a switch on the switchboard. One switch is marked "Heaters & Fans No. 1", the other "Heaters & Fans No. 2". The first of these circuits feeds the unit heater by the service door, the wet sump ventilating blower, and the rack room ventilating fan; the second circuit feeds the unit heater by the boiler room stairs, the engine room roof ventilator, the oil pump, and the oil burner. Each item of equipment can be individually controlled by means of a switch mounted on the wall in a location adjacent to that item of equipment.

(8) Trash racks. - Movable trash racks are provided in the intake structure to screen out any large objects that might damage or clog the pumps. Manually operated hoists are provided for the racks so that the racks may be raised to facilitate cleaning and maintenance.

d. Circuit Avenue Pumping Station. - (1) Electrical. - To energize the electrical circuits throughout the building the following steps should be taken:

(a) Close main service switch.

(b) Throw the two-pole double-throw switch to up position.

(c) All lighting circuits, battery charger, and the sump pump are controlled from the lighting panelboard.

(d) The sump pump starter and push-button station are located adjacent to the lighting panelboard. The "Start" button of the pushbutton station must be pressed to close the magnetic contactor before the sump pump will operate. A float switch on the sump pump controls the operation of the pumps.

(2) Volute pumps. - See Paragraph 7-03b(1)(c) for pumping criteria. The following is the procedure for starting a volute pump:

(a) Check flexible coupling between engine and gear unit to see that it is properly assembled and filled with grease. If pump is to be run for a short time only, not to exceed one minute, it is unnecessary to put cover on coupling and fill with grease.

(b) Open test gate valve on discharge of pump to see if pump is primed. If pump is primed water will flow out of this valve. If pump is not primed, allow gate valve to remain open until all air is exhausted and water flows from valve.

(c) Check oil level of gear unit.

(d) Check oil level of engine.

(e) Check level of cooling water in radiator.

(f) Open louvers in wall in cooling air duct.

(g) Retard spark lever.

(h) Set throttle approximately one-half inch from fully closed position.

(i) Depress with foot the low oil-pressure cutout switch at base of engine. Hold this switch depressed until engine has started and oil pressure has built up to ten pounds.

(j) Close both ignition switches.

(k) Press "Start" button and choke as much as necessary to start engine and maintain engine firing evenly. Do not choke any more than necessary.

(l) Advance spark.

(m) Set throttle to maintain an engine speed of 600 R.P.M. and allow engine to warm up for five minutes.

(n) Keep at least one building door open when an engine is in operation to allow air exhausted from building by radiator fans to be replaced.

(o) Check oil pressure of gear unit. If a positive pressure is not indicated on gage, stop unit and determine cause of lack of oil pressure.

(p) Check test gate valve on pump and allow any air to escape that has collected in top of pump.

(q) The packing gland on the pump should be adjusted as instructed in 8-03b(3) paragraph 4.

(r) After warm up period, advance throttle to full open position. Governor will hold speed of engine at 1200 R.P.M. regardless of load. Pump may be run at any speed desired under 1200 R.P.M. by adjusting throttle.

e. Wayside Pumping Station. - (1) Electrical. - To energize the electrical circuits throughout the building the following steps should be taken:

(a) Close main service switch.

(b) Close circuit breakers on lighting panelboard to energize circuits serving lighting, battery charger, vent fan, sump pump, and unit heater.

(c) Close the sump pump motor control switch located adjacent to the sump pump. Operation of the sump pump is automatically controlled by a float switch after the manual switch is closed.

(2) Pumping Equipment. See Paragraph 7-03b(2)(a) for requirements preliminary to flood operation of the pumping equipment. The following procedure should be followed for placing each pump in operation:

(a) Check engine radiator to make sure it is properly filled.

(b) Check lubricating oil level.

(c) Check gate valves in the pump suction and discharge pipes to make sure these valves are fully open.

(d) Open gate valve located on top of pump casing and bleed as much air as possible from the pump casing, then close valve.

(e) Pump up gasoline with hand fuel pump.

(f) Turn on ignition switches.

(g) Open throttle about one half inch.

(h) Hold low-oil-pressure switch closed and press starter button. Choke, as necessary, to start engine.

(i) Run engine at approximately 600 R.P.M. until engine cooling water reaches about 140°F.

(j) Turn on battery charger and adjust to a charging rate of approximately 10 amperes.

(k) Check and adjust the pump shaft stuffing gland as necessary to permit a small amount of water to leak past the gland. Caution - After a prolonged period of idleness the packing in the stuffing box gland will dry out, with the result that a substantial amount of water will leak past the gland when the pump is first started. Care must be taken at these times not to pull up the gland too tightly because the packing expands as it gets wet and will overheat and score the shaft.

(l) Bleed all air from pump casing and make sure pump is primed by opening the gate valve on top of the pump casing. Close valve when water flows out valve.

(m) Gradually open throttle to full open position. Governor will take over control and maintain speed at 1200 R.P.M.

(n) Check oil level and oil pressure in gear unit.

(o) Maintain close check on the unit, checking cooling water temperature, oil pressure, and lubricate bearings periodically.

(p) Operate pump or pumps as required to maintain water level in the suction chamber between elevation 50.0 and 53.5 as indicated on the intake level gage.

DO NOT OPERATE PUMPS MORE THAN 15 SECONDS WITHOUT WATER IN THE CASING.

(3) When pumping operations are no longer required, the suction chamber should be pumped dry and flushed clean. The sump pump may be used to pump out the suction chamber.

f. Riverdale Pumping Station. - (1) Electricity. To energize the electrical circuits throughout the building the following steps should be taken:

(a) Power circuits:

1. Close the main power switch.

2. Close the individual circuit breakers on the power panelboard to energize the circuits serving the 14 inch pump, sump pump, sluice gate, battery charger, and roof fan.

3. Close the sump pump motor control switch located adjacent to the sump pump. Operation of the sump pump is automatically controlled by a float switch after the manual switch is closed.

(b) Lighting circuits:

1. Close the main lighting service switch.

2. Close the individual circuit breakers on the lighting panelboard to energize the circuits serving lighting, receptacles, and unit heaters.

(2) Sluice Gate: When the river stage reaches elevation 51.0, as indicated on the River Level Gage, close the sluice gate at the inlet end of the conduit adjacent to the station. The sluice gate is closed by means

of the pushbuttons on the motor operated floorstand. In the event of power failure the sluice gate may be closed by hand with the handwheel mounted on the floorstand. See also paragraph 7-03b(2)(b).

(3) Pumping Equipment: - Following closure of the sluice gate, operate the 14 inch electric motor driven pump to handle the sanitary flow and the gasoline driven 24 inch pump to handle the storm flow. In the event either pump is not in operating condition, the 18 inch gate valve in the cross connection between the sanitary and storm sewer suction chambers may be opened to permit the use of the other pump for handling the flow in both systems.

(a) Procedure for placing the 14 inch pump in operation:

1. Check the 14 inch gate valve in the pump suction and the 12 inch gate valve in the pump discharge leading through the south wall to make sure these valves are open. The 14 inch gate valve in the pump discharge pipe leading through the east wall to the conduit should be closed. The sanitary flow should not be pumped through 14 inch discharge to the conduit except when the storm flow is sufficient to flush out the conduit, otherwise undesirable deposits will be left in the conduit following pumping operations.

2. Open gate valve in top of pump casing. Allow all air to bleed out of pump. When water starts to flow out of valve, close valve.

3. Start pump by closing the motor starter switch. Adjust speed by means of the drum controller so that the pump capacity approximately matches the flow into the sanitary suction chamber and maintain the water level in this suction chamber between elevation 46 and 50.5.

4. Check stuffing box on pump shaft and adjust as necessary to permit a small amount of water to leak past the gland. CAUTION: After a prolonged period of idleness, the packing in the stuffing box gland will dry out, with the result that a substantial amount of water will leak past the gland when the pump is first started. Care must be taken at these times not to pull up the gland too tightly because the packing expands as it gets wet and will overheat and score the shaft.

5. Bleed air from pump casing and lubricate bearings periodically during operation.

DO NOT OPERATE PUMP FOR MORE THAN 15 SECONDS WITHOUT WATER IN THE CASING.

(b) Procedure for placing the 24 inch pump in operation:

1. Check engine radiator to make sure it is properly filled.

2. Check lubricating oil level.

3. Check gate valves in pump suction and discharge pipes to make sure these valves are fully open.

4. Open gate valve on top of pump casing and bleed as much air as possible from the pump casing, then close valve.

5. Pump up gasoline with hand fuel pump.

6. Turn on ignition switches.

7. Open throttle about one half inch.

8. Hold low-oil-pressure switch closed and press starter button. Choke, as necessary, to start engine.

9. Run engine approximately 600 R.P.M. until engine cooling water reaches about 140°F.

10. Turn on battery charger and adjust to a charging rate of approximately 10 amperes.

11. Check and adjust the pump shaft stuffing gland as necessary to permit a small amount of water to leak past the gland. See paragraph f (3)(a) 4 above.

12. Bleed all air from pump casing and make sure pump is primed by opening the gate valve on top of the pump casing. Close valve when water flows out valve.

13. Gradually open throttle to full open position. Governor will take over control and maintain speed at 1200 R.P.M. NOTE: During period of low storm sewer flow the pump may be operated at less than full speed in order to reduce the pumping capacity and thus reduce the frequency of stopping and starting the pump.

14. Maintain close check on the unit, checking cooling water temperature, oil pressure, and lubricate bearings periodically.

15. Operate pump as required to maintain water level in the suction chamber between elevation 46 and 50.5 as indicated by the intake level gage.

DO NOT OPERATE PUMP MORE THAN 15 SECONDS WITHOUT WATER IN THE CASING.

(4) When the river stage falls below elevation 51.0, the sluice gate should be opened to permit gravity flow to the river. The suction chamber should be pumped dry and flushed clean. The sump pump may be used to pump out the suction chamber.

SECTION IX

DRAWINGS AND SPECIFICATIONS

9-01. DRAWINGS AND SPECIFICATIONS. - Complete sets of contract plans and specifications were given the Town of West Springfield when the various projects were completed and turned over to the Town for maintenance and operation. A tabulation of these projects and the dates of transfer and acceptance is given below.

Item	Project	Turned Over	Accepted
W.S. 1	Dike above Agawam Bridge (Hired Labor)	Oct. 10, 1939	Oct. 13, 1939
W.S. 2	Memorial Bridge to Station 32+00	Oct. 28, 1939	Nov. 3, 1939
W.S. 3	Dike Station 32+00 to 56+87	Jun. 27, 1941	Jul. 8, 1941
W.S. 4	Dike Station 56+87 to Agawam Bridge	Jul. 15, 1938	Jul. 20, 1938
W.S. 5	North End Bridge to Memorial Bridge	Jan. 10, 1941	Jan. 13, 1941
W.S. 6	North of North End Bridge	Oct. 10, 1939	Oct. 13, 1939
W.S. 7a	Warren Street Pumping Station	Jun. 15, 1943	Jun. 29, 1943
W.S. 7b	Bridge Street Pumping Station	Jul. 18, 1942	Jul. 21, 1942
W.S. 7c	Circuit Ave. Pumping Station	Jul. 18, 1942	Jul. 21, 1942
--	Riverdale Dike	Nov. 1, 1950	Nov. 2, 1950
W.S. 8	Foundation Treatment, Station 56+87 to Agawam Bridge	Dec. 14, 1953	Jan. 21, 1954
--	Relief Wells and Drainage System	Dec. 14, 1953	Jan. 21, 1954

APPENDIX "A"

	PAGE
REGULATIONS PRESCRIBED BY THE SECRETARY OF THE ARMY	A-1

TITLE 33—NAVIGATION AND NAVIGABLE WATERS

hapter II—Corps of Engineers, War Department

ART 208—FLOOD CONTROL REGULATIONS

AINTENANCE AND OPERATION OF FLOOD CONTROL WORKS

Pursuant to the provisions of section 3 f the Act of Congress approved June 22, 936, as amended and supplemented (49 tat. 1571; 50 Stat. 877; and 55 Stat. 38; 33 U. S. C. 701c; 701c-1), the fol-owing regulations are hereby prescribed o govern the maintenance and operaion of flood control works:

§ 208.10 *Local flood protection works; aintenance and operation of structures nd facilities*—(a) *General.* (1) The tructures and facilities constructed by he United States for local flood protecion shall be continuously maintained in uch a manner and operated at such imes and for such periods as may be ecessary to obtain the maximum enefits.

(2) The State, political subdivision hereof, or other responsible local gency, which furnished assurance that t will maintain and operate flood ccnrol works in accordance with regulaions prescribed by the Secretary of War, s required by law, shall appoint a pernanent committee consisting of or eaded by an official hereinafter called he "Superintendent," who shall be reponsible for the development and mainenance of, and directly in charge of, an rganization responsible for the efficient peration and maintenance of all of the tructures and facilities during flood eriods and for continuous inspection nd maintenance of the project works uring periods of low water, all without ost to the United States.

(3) A reserve supply of materials eeded during a flood emergency shall e kept on hand at all times.

(4) No encroachment or trespass which will adversely affect the efficient peration or maintenance of the project works shall be permitted upon the rights-f-way for the protective facilities.

(5) No improvement shall be passed over, under, or through the walls, levees, improved channels or floodways, nor shall any excavation or construction be permitted within the limits of the project right-of-way, nor shall any change be made in any feature of the works without prior determination by the District Engineer of the War Department or his authorized representative that such improvement, excavation, construction, or alteration will not adversely affect the functioning of the protective facilities. Such improvements or alterations as may be found to be desirable and permissible under the above determination shall be constructed in accordance with standard engineering practice. Advice regarding the effect of proposed improvements or alterations on the functioning of the project and information concerning methods of construction acceptable under standard engineering practice shall be obtained from the District Engineer or, if otherwise obtained, shall be submitted for his approval. Drawings or prints showing such improvements or alterations as finally constructed shall be furnished the District Engineer after completion of the work.

(6) It shall be the duty of the superintendent to submit a semiannual report to the District Engineer covering inspection, maintenance, and operation of the protective works.

(7) The District Engineer or his authorized representatives shall have access at all times to all portions of the protective works.

(8) Maintenance measures or repairs which the District Engineer deems necessary shall be promptly taken or made.

(9) Appropriate measures shall be taken by local authorities to insure that the activities of all local organizations operating public or private facilities connected with the protective works are coordinated with those of the Superintendent's organization during flood periods.

(10) The War Department will furnish local interests with an Operation and Maintenance Manual for each completed project, or separate useful part thereof, to assist them in carrying out their obligations under these regulations.

(b) *Levees*—(1) *Maintenance.* The Superintendent shall provide at all times such maintenance as may be required to insure serviceability of the structures in time of flood. Measures shall be taken to promote the growth of sod, exterminate burrowing animals, and to provide for routine mowing of the grass and weeds, removal of wild growth and drift deposits, and repair of damage caused by erosion or other forces. Where practicable, measures shall be taken to retard bank erosion by planting of willows or other suitable growth on areas riverward of the levees. Periodic inspections shall be made by the Superintendent to insure that the above maintenance measures are being effectively carried out and, further, to be certain that:

(i) No unusual settlement, sloughing, or material loss of grade or levee cross section has taken place;

(ii) No caving has occurred on either the land side or the river side of the levee which might affect the stability of the levee section;

(iii) No seepage, saturated areas, or sand boils are occurring;

(iv) Toe drainage systems and pressure relief wells are in good working condition, and that such facilities are not becoming clogged;

(v) Drains through the levees and gates on said drains are in good working condition;

(vi) No revetment work or riprap has been displaced, washed out, or removed;

(vii) No action is being taken, such as burning grass and weeds during inappropriate seasons, which will retard or destroy the growth of sod;

(viii) Access roads to and on the levee are being properly maintained;

(ix) Cattle guards and gates are in good condition;

(x) Crown of levee is shaped so as to drain readily, and roadway thereon, if any, is well shaped and maintained;

(xi) There is no unauthorized grazing or vehicular traffic on the levees;

(xii) Encroachments are not being made on the levee right-of-way which might endanger the structure or hinder its proper and efficient functioning durin times of emergency.

Such inspections shall be made immediately prior to the beginning of the flood season; immediately following each major high water period, and otherwise at intervals not exceeding 90 days, and such intermediate times as may be necessary to insure the best possible care of the levee. Immediate steps will be taken to correct dangerous conditions disclosed by such inspections. Regular maintenance repair measures shall be accomplished during the appropriate season as scheduled by the Superintendent.

(2) *Operation.* During flood periods the levee shall be patrolled continuously to locate possible sand boils or unusual wetness of the landward slope and to be certain that:

(i) There are no indications of slides or sloughs developing;

(ii) Wave wash or scouring action is not occurring;

(iii) No low reaches of levee exist which may be overtopped;

(iv) No other conditions exist which might endanger the structure.

Appropriate advance measures will be taken to insure the availability of adequate labor and materials to meet all contingencies. Immediate steps will be taken to control any condition which endangers the levee and to repair the damaged section.

(c) *Flood walls.*—(1) *Maintenance.* Periodic inspections shall be made by the Superintendent to be certain that:

(i) No seepage, saturated areas, or sand boils are occurring;

(ii) No undue settlement has occurred which affects the stability of the wall or its water tightness;

(iii) No trees exist, the roots of which might extend under the wall and offer accelerated seepage paths;

(iv) The concrete has not undergone cracking, chipping, or breaking to an extent which might affect the stability of the wall or its water tightness;

(v) There are no encroachments upon the right-of-way which might endanger the structure or hinder its functioning in time of flood;

(vi) Care is being exercised to prevent accumulation of trash and debris adjacent to walls, and to insure that no fires are being built near them;

(vii) No bank caving conditions exist riverward of the wall which might endanger its stability;

(viii) Toe drainage systems and pressure relief wells are in good working condition, and that such facilities are not becoming clogged.

Such inspections shall be made immediately prior to the beginning of the flood season, immediately following each major high water period, and otherwise at intervals not exceeding 90 days. Measures to eliminate encroachments and effect repairs found necessary by such inspections shall be undertaken immediately. All repairs shall be accomplished by methods acceptable in standard engineering practice.

(2) *Operation.* Continuous patrol of the wall shall be maintained during flood periods to locate possible leakage at monolith joints or seepage underneath the wall. Floating plant or boats will not be allowed to lie against or tie up to the wall. Should it become necessary during a flood emergency to pass anchor cables over the wall, adequate measures shall be taken to protect the concrete and construction joints. Immediate steps shall be taken to correct any condition which endangers the stability of the wall.

(d) *Drainage structures*—(1) *Maintenance.* Adequate measures shall be taken to insure that inlet and outlet channels are kept open and that trash, drift, or debris is not allowed to accumulate near drainage structures. Flap gates and manually operated gates and valves on

drainage structures shall be examined, oiled, and trial operated at least once every 90 days. Where drainage structures are provided with stop log or other emergency closures, the condition of the equipment and its housing shall be inspected regularly and a trial installation of the emergency closure shall be made at least once each year. Periodic inspections shall be made by the Superintendent to be certain that:

(i) Pipes, gates, operating mechanism, riprap, and headwalls are in good condition;

(ii) Inlet and outlet channels are open;

(iii) Care is being exercised to prevent the accumulation of trash and debris near the structures and that no fires are being built near bituminous coated pipes;

(iv) Erosion is not occurring adjacent to the structure which might endanger its water tightness or stability.

Immediate steps will be taken to repair damage, replace missing or broken parts, or remedy adverse conditions disclosed by such inspections.

(2) *Operation.* Whenever high water conditions impend, all gates will be inspected a short time before water reaches the invert of the pipe and any object which might prevent closure of the gate shall be removed. Automatic gates shall be closely observed until it has been ascertained that they are securely closed. Manually operated gates and valves shall be closed as necessary to prevent inflow of flood water. All drainage structures in levees shall be inspected frequently during floods to ascertain whether seepage is taking place along the lines of their contact with the embankment. Immediate steps shall be taken to correct any adverse condition.

(e) *Closure structures*—(1) *Maintenance.* Closure structures for traffic openings shall be inspected by the superintendent every 90 days to be certain that:

(i) No parts are missing;

(ii) Metal parts are adequately covered with paint;

(iii) All movable parts are in satisfactory working order,

(iv) Proper closure can be made promptly when necessary;

(v) Sufficient materials are on hand for the erection of sand bag closures and that the location of such materials will be readily accessible in times of emergency.

Tools and parts shall not be removed for other use. Trial erections of one or more closure structures shall be made once each year, alternating the structures chosen so that each gate will be erected at least once in each 3-year period. Trial erection of all closure structures shall be made whenever a change is made in key operating personnel. Where railroad operation makes trial erection of a closure structure infeasible, rigorous inspection and drill of operating personnel may be substituted therefor. Trial erection of sand bag closures is not required. Closure materials will be carefully checked prior to and following flood periods, and damaged or missing parts shall be repaired or replaced immediately.

(2) *Operation.* Erection of each movable closure shall be started in sufficient time to permit completion before flood waters reach the top of the structure sill. Information regarding the proper method of erecting each individual closure structure, together with an estimate of the time required by an experienced crew to complete its erection will be given in the Operation and Maintenance Manual which will be furnished local interests upon completion of the project. Closure structures will be inspected frequently during flood periods to ascertain that no undue leakage is occurring and that drains provided to care for ordinary leakage are functioning properly. Boats or floating plant shall not be allowed to tie up to closure structures or to discharge passengers or cargo over them.

(f) *Pumping plants*—(1) *Maintenance.* Pumping plants shall be inspected by the Superintendent at intervals not to exceed 30 days during flood seasons and 90 days during off-flood seasons to insure that all equipment is in order for instant use. At regular intervals, proper measures shall be taken to provide for cleaning plant, buildings, and equipment, repainting as necessary, and lubricating all machinery Adequate supplies of lubricants for all types of machines, fuel for gasoline or diesel powered equipment, and flash lights or lanterns for emergency lighting shall be kept on hand at all times. Telephone service shall be maintained at pumping plants. All equipment, including switch gear, transformers, motors, pumps, valves, and gates shall be trial operated and checked at least once every 90 days. Megger tests of all insulation shall be made whenever wiring has been subjected to undue dampness and otherwise at intervals not to exceed one year. A record shall be kept showing the results of such tests. Wiring disclosed to be in an unsatisfactory condition by such tests shall be brought to a satisfactory condition or shall be promptly replaced. Diesel and gasoline engines shall be started at such intervals and allowed to run for such length of time as may be necessary to insure their serviceability in times of emergency. Only skilled electricians and mechanics shall be employed on tests and repairs. Operating personnel for the plant shall be present during tests. Any equipment removed from the station for repair or replacement shall be returned or replaced as soon as practicable and shall be trial operated after reinstallation. Repairs requiring removal of equipment from the plant shall be made during off-flood seasons insofar as practicable.

(2) *Operation.* Competent operators shall be on duty at pumping plants whenever it appears that necessity for pump operation is imminent. The operator shall thoroughly inspect, trial operate, and place in readiness all plant equipment. The operator shall be familiar with the equipment manufacturers' instructions and drawings and with the "Operating Instructions" for each station. The equipment shall be operated in accordance with the above-mentioned "Operating Instructions" and care shall be exercised that proper lubrication is being supplied all equipment, and that no overheating, undue vibration or noise is occurring. Immediately upon final recession of flood waters, the pumping station shall be thoroughly cleaned, pump house sumps flushed, and equipment thoroughly inspected, oiled and greased. A record or log of pumping plant operation shall be kept for each station, a copy of which shall be furnished the District Engineer following each flood.

(g) *Channels and floodways* — (1) *Maintenance.* Periodic inspections of improved channels and floodways shall be made by the Superintendent to be certain that:

(i) The channel or floodway is clear of debris, weeds, and wild growth;

(ii) The channel or floodway is not being restricted by the depositing of waste materials, building of unauthorized structures or other encroachments;

(iii) The capacity of the channel or floodway is not being reduced by the formation of shoals;

(iv) Banks are not being damaged by rain or wave wash, and that no sloughing of banks has occurred;

(v) Riprap sections and deflection dikes and walls are in good condition;

(vi) Approach and egress channels adjacent to the improved channel or floodway are sufficiently clear of obstructions and debris to permit proper functioning of the project works.

Such inspections shall be made prior to the beginning of the flood season and otherwise at intervals not to exceed 90 days. Immediate steps will be taken to remedy any adverse conditions disclosed by such inspections. Measures will be taken by the Superintendent to promote the growth of grass on bank slopes and earth deflection dikes. The Superintendent shall provide for periodic repair and cleaning of debris basins, check dams, and related structures as may be necessary.

(2) *Operation.* Both banks of the channel shall be patrolled during periods of high water, and measures shall be taken to protect those reaches being attacked by the current or by wave wash. Appropriate measures shall be taken to prevent the formation of jams of ice or debris. Large objects which become lodged against the bank shall be removed. The improved channel or floodway shall be thoroughly inspected immediately following each major high water period. As soon as practicable thereafter, all snags and other debris shall be removed and all damage to banks, riprap, deflection dikes and walls, drainage outlets, or other flood control structures repaired.

(h) *Miscellaneous facilities* — (1) *Maintenance.* Miscellaneous structures and facilities constructed as a part of the protective works and other structures and facilities which function as a part of, or affect the efficient functioning of the protective works, shall be periodically inspected by the Superintendent and appropriate maintenance measures taken. Damaged or unserviceable parts shall be repaired or replaced without delay. Areas used for ponding in connection with pumping plants or for temporary storage of interior run-off during flood periods shall not be allowed to become filled with silt, debris, or dumped material. The Superintendent shall take proper steps to prevent restriction of bridge openings and, where practicable, shall provide for temporary raising during floods of bridges which restrict channel capacities during high flows.

(2) *Operation.* Miscellaneous facilities shall be operated to prevent or reduce flooding during periods of high water. Those facilities constructed as a part of the protective works shall not be used for purposes other than flood protection without approval of the District Engineer unless designed therefor. (49 Stat. 1571, 50 Stat. 877; and 55 Stat. 638; 33 U.S.C. 701c; 701c-1) (Regs. 9 August 1944, CE SPEWF)

[SEAL] J. A. ULIO,
Major General,
The Adjutant General.

[F. R. Doc. 44-12285; Filed, August 16, 1944; 9:44 a. m.]

APPENDIX "B"

	SECTION
ASSURANCE OF LOCAL COOPERATION	
a. WEST SPRINGFIELD DIKE	
Project - 1937 Construction	A
" W.S. 1	B
" W.S. 2 and W.S. 3	C
" W.S. 4	D
" W.S. 5	E
" W.S. 6	F
b. RIVERDALE DIKE	G

SECTION A. ASSURANCES BY THE TOWN OF WEST SPRINGFIELD, MASS.

WHEREAS, pursuant to the provisions of the Emergency Relief Appropriation Act of 1936, approved June 22, 1936, making an appropriation for flood control and other conservation, an allotment of funds has been approved by the President, August 12, 1936, for raising and enlarging existing dikes in the Connecticut River for the flood protection of the Town of West Springfield; and

WHEREAS, the United States of America, through the Corps of Engineers of the War Department, having jurisdiction of construction of said flood control project, and in accordance with the policy of the federal government that no money shall be expended on the construction of any project until States, political, sub-divisions, or other responsible local agencies have given assurances satisfactory to the Secretary of War that they will (a) provide without cost to the United States all lands, easements, and rights-of-way necessary for the construction of the project, except as otherwise provided herein; (b) hold and save the United States free from damages due to the construction works; (c) maintain and operate all the works after completion in accordance with regulations prescribed by the Secretary of War; and

WHEREAS, the Board of Selectmen of the Town of West Springfield by virtue of the authority vested in it under a motion duly passed by a Special Town Meeting held on September 10, 1936 and by virtue of the authority vested in it by the General Laws of the Commonwealth of Massachusetts is authorized to accept on behalf of the Town of West Springfield the offer of the United States of America to construct certain works of improvement for flood protection of said Town of West Springfield, and the said Board of Selectmen is authorized to enter into such agreements with the United States as it may request as evidence of the Town's formal acceptance.

NOW, THEREFORE, in order to comply with the established policy of the federal government pertaining to the construction of flood control projects, and in consideration of the construction by the United States, and of the benefits to accrue from the work of improvement, the Town of West Springfield hereby assures the Secretary of War as follows:

(a) That the Town of West Springfield will furnish, without cost to the United States, all lands, easements and rights-of-way, necessary for the raising and enlarging existing dikes along the Connecticut River for flood protection of the Town of West Springfield. The lands, easements and rights-of-way which the Town of West Springfield shall furnish shall include those needed for raising and enlarging dikes, for borrow pits and spoil disposal areas, for access roads, and all other rights in, upon, through or over private property which are required by

the United States in connection with the construction of the project. Maps showing the lands, easements, or rights-of-way needed in the prosecution of the work will be obtained by the Town of West Springfield from the United States. Detailed property surveys and title searchers necessary to acquire the land or interests therein will be performed by the Town of West Springfield.

(b) That the Town of West Springfield will hold and save the United States, its officers and employees, free from all claims for damages and from all liability due to the construction works;

(c) That the Town of West Springfield will maintain and operate without expense to the United States all of the works after completion, in accordance with regulations prescribed by the Secretary of War.

(d) That it is understood by the Town of West Springfield that the United States is not committed or obligated in any way to complete said flood control work or any part thereof.

IN WITNESS WHEREOF, we, James R. Dearden, Henry S. Johnston and Frank T. Raleigh, the Board of Selectmen of the Town of West Springfield, under authority of said Special Town Meeting and the General Laws of the Commonwealth of Massachusetts, have hereunto set our hands and caused the common seal of the Town of West Springfield to be affixed hereto this seventeenth day of September, A.D. 1936.

ATTEST

/s/ Henry E. Schmuck
Town Clerk

SEAL: WEST SPRINGFIELD INCORPORATED
A TOWN 1774.

TOWN OF WEST SPRINGFIELD

By /s/ James R. Dearden

/s/ Henry S. Johnston

/s/ Frank T. Raleigh

Board of Selectmen

Recommended as satisfactory assurances.

EDWARD M. MARKHAM
Major General, Chief of Engineers
United States Army

Accepted as satisfactory assurances.

Secretary of War

COMMONWEALTH OF MASSACHUSETTS)

COUNTY OF HAMPDEN)

On this seventeenth day of September in the year one thousand nine hundred and thirty-six, before me personally came James R. Dearden, Henry S. Johnston and Frank T. Raleigh to me known, who being by me duly sworn, did depose and say that they reside in West Springfield, Massachusetts; that they are the Board of Selectmen of the Town of West Springfield, Massachusetts, described in and who executed the foregoing instrument; that they know the common seal of The Town of West Springfield, that the seal affixed to said instrument is such Town seal; that it was so affixed by authority of law of said Town, and that they signed their names thereto by like authority.

My commission expires April 9th 1937.

/s/ Frederick P. Bogg
Notary Public

SECTION B. ASSURANCES BY THE TOWN OF WEST SPRINGFIELD, MASS.

WHEREAS, by Section 3 of the Flood Control Act approved June 22, 1936, known as the Flood Control Act of 1936, no money appropriated under authority of said act shall be expended on the construction of any project until states, political subdivisions thereof, or other responsible local agencies have given assurances to the Secretary of War that they will (a) provide without cost to the United States, all lands, easements, and rights-of-way necessary for the construction of the project; (b) hold and save the United States free from damages due to the construction works; (c) maintain and operate all the works after completion in accordance with regulations prescribed by the Secretary of War; and

WHEREAS, by the Flood Control Act approved June 28, 1938, local flood protection works were authorized to be constructed in the Town of West Springfield between the Agawam Bridge and Station No. 157 on River Street as indicated on Plans of West Springfield Dike on file in the United States Engineer Office, Providence, R.I., which said works are subject to the provisions of Section 3 of the Flood Control Act of 1936; and

WHEREAS, an allotment of funds has been made for the prosecution of said works.

NOW, THEREFORE, to comply with the requirements of Section 3 of the Flood Control Act of 1936, the Town of West Springfield, pursuant to a resolution made and approved by the said Town at a town meeting held on October 16, 1936 does hereby assure the Secretary of War that it will comply with the above stated provisions of Section 3 of the Flood Control Act of 1936 in connection with the works shown on the plans entitled, Plans of West Springfield Dike which are on file in the United States Engineer Office, Providence, Rhode Island. In accordance with the established policy of the Corps of Engineers the Town of West Springfield will furnish necessary borrow pits with rights of entry thereto.

IN WITNESS WHEREOF, we, James R. Dearden, Henry S. Johnston and Frank T. Raleigh, the Board of Selectmen of the Town of West Springfield, under authority of said Town Meeting and the General Laws of the Commonwealth of Massachusetts, have hereunto set our hands and caused the common seal of the Town of West Springfield to be affixed hereto this nineteenth day of December, A.D. 1938.

ATTEST

/s/ Henry E. Schmuck
Town Clerk

SEAL: Incorporated a Town 1774-
West Springfield, Mass.

TOWN OF WEST SPRINGFIELD

By /s/ James R. Dearden

/s/ Henry S. Johnston

/s/ Frank T. Raleigh
Board of Selectmen

COMMONWEALTH OF MASSACHUSETTS)

COUNTY OF HAMPDEN)

On this nineteenth day of December in the year one thousand nine hundred and thirty-eight, before me personally came James R. Dearden, Henry S. Johnston and Frank T. Raleigh to me known, who being by me duly sworn, did depose and say that they reside in West Springfield, Massachusetts; that they are the Board of Selectmen of the Town of West Springfield, Massachusetts, described in and who executed the foregoing instrument; that they know the common seal of the Town of West Springfield, that the seal affixed to said instrument is such Town seal; that it was so affixed by authority of law of said Town, and that they signed their names thereto by like authority.

/s/ Alice R. Curran
Notary Public

My commission expires November 5, 1943.

(SEAL)

Warrant for
SPECIAL TOWN MEETING

Hampden, ss.

To Henry E. Schmuck, Clerk of the Town of West Springfield:

In the name of the Commonwealth of Massachusetts you are required to notify the Inhabitants of the Town of West Springfield qualified to vote in town affairs, to meet in the Town Hall the sixteenth day of October, 1936, at eight o'clock P.M., then and there to act on the following articles:

Article 1. To see if the Town will vote to authorize the Board of Selectmen to accept on behalf of the Town the offer of the United States of America to construct certain works of improvement for flood protection in the Town and to execute on behalf of the Town an agreement to indemnify the United States from all claims for damages and all liability due to the construction of the said flood protection works by the United States and an agreement that the Town will maintain and operate without expense to the United States all of the said works after completion in accordance with regulations prescribed by the Secretary of War and any agreements with the United States as it may request in connection with the construction and maintenance of said works and the provision by the Town without cost to the United States of all the lands, easements and rights of way necessary for the construction of said works.

And you are directed to serve this warrant by posting attested copies thereof in a public place in each precinct in the Town, said posting to be at least seven days before the time set for the holding of said meeting, and you are further directed to give such other and further notice of said meeting as is required by law.

Given under our hand this seventh day of October, 1936

James R. Dearden
Henry S. Johnston
Frank T. Raleigh

Selectmen of West Springfield

A true copy, attest:

Henry E. Schmuck, Town Clerk

Hampden, ss.

West Springfield, Mass.
October 8, 1936

I hereby certify that I have this day published the foregoing warrant by posting in the following places attested copies thereof as provided in the revised By-laws of West Springfield approved at the Special Town Meeting held May 26, 1933: Precinct 1, West Side Drug

Company; 2, Public Library; 3, Town Hall Corridor; 4, Webster's Variety Store; 5, West Springfield Community Y.M.C.A.

Henry E. Schmuck, Town Clerk

Hampden, ss.

West Springfield, Mass.
October 8, 1936

In accordance with the provisions of Sec. 3, Chapter 311, Acts of 1922, I hereby certify that at 4:00PM this date, notices were mailed to one hundred seventy-eight (178) town meeting members; the said notices being deposited in the mail box by Raymond I. Bond, witnessed by Victoria Funaro, assistants in the Town Clerk and Treasurer's Office.

Henry E. Schmuck, Town Clerk

SPECIAL TOWN MEETING - October 16, 1936

At a legal meeting of the Inhabitants of the Town of West Springfield qualified to vote on town affairs and held by authority of the foregoing warrant on Friday, the sixteenth day of October, 1936, the following business was transacted:

The meeting was called to order at 8:10 PM by Moderator Frank Auchter who then declared a recess for five minutes until the Finance Committee arrived. The meeting was resumed at 8:15 PM and Moderator Auchter appointed Charles Garfield and Arthur M. Sheldon tellers. They reported 108 members present with 90 necessary for a quorum. ----------

Article 1. Selectman Frank T. Raleigh read the following motion which was unanimously voted: MOVED, That the Town voted to authorize the Board of Selectmen to accept on behalf of the Town the offer of the United States of America to construct certain works of improvement for flood protection in the Town and to execute on behalf of the Town an agreement to indemnify the United States from all claims for damages and all liability due to the construction of the said flood protection works by the United States and an agreement that the Town will maintain and operate without expense to the United States all of the said works after completion in accordance with regulations prescribed by the Secretary of War and any agreements with the United States as it may request in connection with the construction and maintenance of said works and the provision by the Town without cost to the United States of all the lands, easements and rights of way necessary for the construction of said works, including the furnishing by the Town of all materials needed for raising and enlarging dikes,borrow pits and spoil disposal areas, access roads and all other rights in, upon,through or over private property which are required by the United States in connection with the said construction, it being understood by the Town that the United States is not committed or obligated to complete said flood control work or any part thereof and it is further moved that the Town ratify and approve the assurances to the United States of America executed by the Board of Selectmen on September 17, 1936, all of the foregoing provisions having been incorporated in said assurances, and that said Board of Selectmen be and they are hereby authorized by and on behalf of the Town of West Springfield to enter into such other agreement with the United States as may be required to comply with the rules and regulations of the War Department or the Flood Control Act of the United States.

The meeting adjourned at 8:30 P.M.

Henry E. Schmuck, Town Clerk

* * * * * * * * *

Commonwealth of Massachusetts
Hampden, ss.

West Springfield, Mass.
January 12, 1939

I hereby certify that this is a true copy from the records of the Town of West Springfield of Article 1 in the Warrant and the action taken thereon at the Special Town Meeting held October 16, 1936.

(SEAL) - Incorporated a Town 1774 -
Springfield, Mass.

/s/ Henry E. Schmuck
Town Clerk

EXTRACTS FROM GENERAL LAWS

of the

STATE OF MASSACHUSETTS

TOWN MEETING

Chapter 39, Section 9. "Except as otherwise provided by special law, the annual meeting of each town shall be held in February, March or April; and other meetings may be held at such times as the selectmen may order. Meetings may be adjourned from time to time, and to any place within the town."

Chapter 39, Section 10. "Every town meeting, except as hereinafter provided, shall be called in pursuance of a warrant, under the hands of the selectmen, notice of which shall be given at least seven days before such meeting. The warrant shall be directed to the constables or to some other persons, who shall forthwith give notice of such meeting in the manner prescribed by the by-laws, or, if there are no by-laws, by a vote of the town. The warrant for all town meetings shall state the time and place of holding the meeting and the subjects to be acted upon thereat. The selectmen shall insert in the warrant for the annual meeting all subjects the insertion of which shall be requested of them in writing by ten or more registered voters of the town and in the warrant for every special town meeting all subjects the insertion of which shall be requested of them in writing by one hundred registered voters or by ten per cent of the total number of registered voters of the town. No action shall be valid unless the subject matter thereof is contained in the warrant. Two or more distinct town meetings for distinct purposes may be called by the same warrant."

Chapter 40, Section 4. "A town may make contracts for the exercise of its corporate powers, and the Supreme Court of Massachusetts has ruled that towns may make any contracts which are necessary or convenient in the exercise of their corporate powers, and for such purpose there is no limitation of their authority for their contracts will be valid when made in relation to objects concerning which they have a duty to perform, an interest to protect, or a right to defend."

Chapter 40, Section 5, Clause 39. "A town may make appropria-

tions for providing co-operation with the Federal Government in unemployment relief and other projects of direct or indirect benefits to the town or its inhabitants."

Chapter 44, Section 7, Clause 7 provides that "cities and towns may incur debt for the construction of walls or dikes for the protection of highways or property."

True extracts made from the General
Laws of Massachusetts.

/s/ Thomas E. McElree
Thomas E. McElree
Principal Administrative Asst.
U.S. Engineer Office
Providence, R.I.

SECTION C. ASSURANCES BY THE TOWN OF WEST SPRINGFIELD, MASS.

WHEREAS, by Section 3 of the Flood Control Act approved June 22, 1936, known as the Flood Control Act of 1936, no money appropriated under authority of said act shall be expended on the construction of any project until states, political subdivisions thereof, or other responsible local agencies have given assurances to the Secretary of War that they will (a) provide without cost to the United States, all lands, easements, and rights-of-way necessary for the construction of the project; (b) hold and save the United States free from damages due to the construction works; (c) maintain and operate all the works after completion in accordance with regulations prescribed by the Secretary of War; and

WHEREAS, by the Flood Control Act approved June 28, 1938, local flood protection works were authorized to be constructed in the Town of West Springfield in the following location, to-wit:

> Dike enlargement in West Springfield along the Connecticut River below Memorial Bridge and continuing along the Westfield River, the location being more specifically described as lying between Stations 1+70± and 56+87± as shown on the plans for the West Springfield Dike, Fiscal Year 1939 Section, General Plans, United States Engineer Office, March 1939, File No. CT-4-1376,

which said works are subject to the provisions of Section 3 of the Flood Control Act of 1936; and

WHEREAS, an allotment of funds has been made for the prosecution of said works.

NOW, THEREFORE, to comply with the requirements of Section 3 of the Flood Control Act of 1936, the Town of West Springfield, pursuant to a resolution made and approved by the said Town at a town meeting held on October 16, 1936 does hereby assure the Secretary of War that it will comply with the above stated provisions of Section 3 of the Flood Control Act of 1936 in connection with the works shown on the plans entitled, Plans of West Springfield Dike which are on file in the United States Engineer Office, Providence, Rhode Island. In accordance with the established policy of the Corps of Engineers the Town of West Springfield will furnish necessary borrow pits with rights of entry thereto.

IN WITNESS WHEREOF, we, Henry S. Johnston, Frank T. Raleigh and James R. Dearden, the Board of Selectmen of the Town of West Springfield, under authority of said Town Meeting and the General

Laws of the Commonwealth of Massachusetts, have hereunto set our hands and caused the common seal of the Town of West Springfield to be affixed hereto this fourth day of May, A.D. 1939.

ATTEST:

/s/ Henry E. Schmuck
Town Clerk

TOWN OF WEST SPRINGFIELD

By /s/ Henry S. Johnston

/s/ Frank T. Raleigh

/s/ James R. Dearden

Board of Selectmen

(SEAL) Incorporated a Town
1775 - West Springfield,
Mass.

COMMONWEALTH OF MASSACHUSETTS)

COUNTY OF HAMPDEN)

On this fourth day of May in the year one thousand nine hundred and thirty-nine, before me personally came Henry S. Johnston, Frank T. Raleigh and James R. Dearden to me known, who being by me duly sworn, did depose and say that they reside in West Springfield, Massachusetts; that they are the Board of Selectmen of the Town of West Springfield, Massachusetts, described in and who executed the foregoing instrument; that they know the common seal of the Town of West Springfield, that the seal affixed to said instrument is such Town seal; that it was so affixed by authority of law of said Town, and that they signed their names thereto by like authority.

/s/ Alice R. Curran
Notary Public.

My commission expires November 5, 1943. (SEAL)

SECTION D. ASSURANCES BY THE TOWN OF WEST SPRINGFIELD, MASS.

WHEREAS, by Section 3 of the Flood Control Act approved June 22, 1936, known as the Flood Control Act of 1936, no money appropriated under authority of said act shall be expended on the construction of any project until states, political subdivisions thereof, or other responsible local agencies have given assurances to the Secretary of War that they will (a) provide without cost to the United States, all lands, easements, and rights-of-way necessary for the construction of the project; (b) hold and save the United States free from damage due to the construction works; (c) maintain and operate all the works after completion in accordance with regulations prescribed by the Secretary of War; and

WHEREAS, by the Flood Control Act approved June 28, 1938, local flood protection works were authorized to be constructed in the Town of West Springfield in the following location, to wit:

> "Flood control works in West Springfield along the Westfield River, the location being more specifically described as lying between dike station 57+60, more or less, southeast of Circuit Avenue and the Agawam Bridge over the Westfield River in accordance with plans prepared or in preparation and which will be filed in the United States Engineer Office, Providence, Rhode Island."

which said works are subject to the provisions of Section 3 of the Flood Control Act of 1936; and

WHEREAS, an allotment of funds has been made for the prosecution of said works.

NOW, THEREFORE, to comply with the requirements of Section 3 of the Flood Control Act of 1936, the Town of West Springfield, pursuant to a resolution made and approved by the said Town at a town meeting held on October 16, 1936 does hereby assure the Secretary of War that it will comply with the above stated provisions of Section 3 of the Flood Control Act of 1936 in connection with the flood protection works referred to above. In accordance with the established policy of the Corps of Engineers the Town of West Springfield will furnish necessary borrow pits with rights of entry thereto.

IN WITNESS WHEREOF, we, Henry S. Johnson, Frank T. Raleigh and James R. Dearden, the Board of Selectmen of the Town of West Springfield, under authority of said Town Meeting and the General Laws of the Commonwealth of Massachusetts, have hereunto set our hands and

caused the common seal of the Town of West Springfield to be affixed this Sixth day of February A.D. 1941.

ATTEST: TOWN OF WEST SPRINGFIELD

SEAL: WEST SPRINGFIELD, MASS.
INC. A TOWN 1774

By JAMES R. DEARDEN
HENRY S. JOHNSTON
FRANK T. RALEIGH

COMMONWEALTH OF MASSACHUSETTS)
)
COUNTY OF HAMPDEN)

On this 6th day of February in the year one thousand and nine hundred and forty-one, before me personally came James R. Dearden, Henry S. Johnston and Frank T. Raleigh to me known, who being by me duly sworn, did depose and say that they reside in West Springfield, Massachusetts; that they are the Board of Selectment of the Town of West Springfield, Massachusetts, described in and who executed the foregoing instrument; that they know the common seal of the Town of West Springfield, that the seal affixed to said instrument is such Town Seal; that it was so affixed by authority of law of said Town, and that they signed their names thereto by like authority.

Frederick B. Bagg, Notary Public

My commission expires March 31, 1944.

SECTION E. ASSURANCES BY THE TOWN OF WEST SPRINGFIELD, MASS.

WHEREAS, by Section 3 of the Flood Control Act approved June 22, 1936, known as the Flood Control Act of 1936, no money appropriated under authority of said Act shall be expended on the construction of any project until states, political subdivisions thereof, or other responsible local agencies have given assurances to the Secretary of War that they will (a) provide without cost to the United States, all lands, easements, and rights-of-way necessary for the construction of the project; (b) hold and save the United States free from damages due to the construction works; (c) maintain and operate all the works after completion in accordance with regulations prescribed by the Secretary of War; and

WHEREAS, by the Flood Control Act approved June 28, 1938, local flood protection works were authorized to be constructed in the Town of West Springfield in the following location, to wit:

> "Dike enlargement in West Springfield along the Connecticut River from the North End Bridge to Memorial Bridge in accordance with plans in preparation, and which will be filed in the United States Engineer Office, Providence, Rhode Island."

which said works are subject to the provisions of Section 3 of the Flood Control Act of 1936; and

WHEREAS, an allotment of funds has been made for the prosecution of said works.

NOW, THEREFORE, to comply with the requirements of Section 3 of the Flood Control Act of 1936, the Town of West Springfield, pursuant to a resolution made and approved by the said Town at a town meeting held on October 16, 1936, does hereby assure the Secretary of War that it will comply with the above stated provisions of Section 3 of the Flood Control Act of 1936 in connection with the works shown on the plans entitled, Plans of West Springfield Dike which are on file in the United States Engineer Office, Providence, Rhode Island. In accordance with the established policy of the Corps of Engineers the Town of West Springfield will furnish necessary borrow pits with rights of entry thereto.

IN WITNESS WHEREOF, we, Henry S. Johnston, Frank T. Raleigh and James R. Dearden, the Board of Selectmen of the Town of West Springfield, under authority of said Town Meeting and the General Laws of the Commonwealth of Massachusetts, have hereunto set our hands and caused the common seal of the Town of West Springfield to be affixed hereto this Seventeenth day of October A.D. 1939.

ATTEST:

HENRY E. SCHMUCK
Town Clerk

SEAL

TOWN OF WEST SPRINGFIELD

By HENRY S. JOHNSTON

FRANK T. RALEIGH

JAMES R. DEARDEN
Board of Selectmen

COMMONWEALTH OF MASSACHUSETTS)
)
COUNTY OF HAMPDEN)

On this Seventeenth day of October in the year one thousand and nine hundred and thirty-nine, before me personally came Henry S. Johnston, Frank T. Raleigh and James R. Dearden to me known, who being by me duly sworn, did depose and say that they reside in West Springfield, Massachusetts; that they are the Board of Selectment of the Town of West Springfield, Massachusetts, described in and who executed the foregoing instrument; that they know the common seal of the Town of West Springfield, that the seal affixed to said instrument is such Town Seal; that it was so affixed by authority of law of said Town, and that they signed their names thereto by like authority.

Frederick P. Bagg, Notary Public

My commission expires March 31, 1944.

SECTION F. ASSURANCES BY THE TOWN OF WEST SPRINGFIELD, MASS.

WHEREAS, by Section 3 of the Flood Control Act approved June 22, 1936, known as the Flood Control Act of 1936, no money appropriated under authority of said act shall be expended on the construction of any project until states, political subdivisions thereof, or other responsible local agencies have given assurances to the Secretary of War that they will (a) provide without cost to the United States, all lands, easements, and rights-of-way necessary for the construction of the project; (b) hold and save the United States free from damages due to the construction works; (c) maintain and operate all the works after completion in accordance with regulations prescribed by the Secretary of War; and

WHEREAS, by the Flood Control Act approved June 28, 1938, local flood protection works were authorized to be constructed in the Town of West Springfield between the highway known as Riverdale Street and the Connecticut River and extending to a point opposite White Church hill, so-called, as indicated on Plans of West Springfield Dike on file in the United States Engineer Office, Providence, R.I., which said works are subject to the provisions of Section 3 of the Flood Control Act of 1936; and

WHEREAS, an allotment of funds has been made for the prosecution of said works.

NOW, THEREFORE, to comply with the requirements of Section 3 of the Flood Control Act of 1936, the Town of West Springfield, pursuant to a resolution made and approved by the said Town at a town meeting held on October 16, 1936 does hereby assure the Secretary of War that it will comply with the above stated provisions of Section 3 of the Flood Control Act of 1936 in connection with the works shown on the plans entitled, Plans of West Springfield Dike which are on file in the United States Engineer Office, Providence, Rhode Island. In accordance with the established policy of the Corps of Engineers the Town of West Springfield will furnish necessary borrow pits with rights of entry thereto.

IN WITNESS WHEREOF, we, James R. Dearden and Frank T. Raleigh, a majority of the members of the Board of Selectmen of the Town of West Springfield, under authority of said Town Meeting and the General Laws of the Commonwealth of Massachusetts, have hereunto set our hands and caused the common seal of the Town of West Springfield to be affixed hereto this twenty-fourth day of January, A.D. 1939.

ATTEST:

/s/ Henry E. Schmuck

TOWN OF WEST SPRINGFIELD

By /s/ James R. Dearden

/s/ Frank T. Raleigh
Majority, Board of Selectmen

SEAL - Incorporated a Town 1774-
West Springfield, Mass.

COMMONWEALTH OF MASSACHUSETTS)
)
COUNTY OF HAMPDEN)

On this twenty-fourth day of January in the year one thousand nine hundred and thirty-nine, before me personally came James R. Dearden and Frank T. Raleigh to me known, who being by me duly sworn, did depose and say that they reside in West Springfield, Massachusetts; that they are members of the Board of Selectmen of the Town of West Springfield, Massachusetts, described in and who executed the foregoing instrument; that they know the common seal of the Town of West Springfield, that the seal affixed to said instrument is such Town seal; that it was so affixed by authority of law of said Town, and that they signed their names thereto by like authority.

/s/ Alice R. Curran
Notary Public

My commission expires November 5, 1943.

(SEAL)

U.S. ENGINEER OFFICE
PROVIDENCE, R.I.
F.C. 10/31-2
FEB 2, 1939

TOWN OF WEST SPRINGFIELD, MASSACHUSETTS
OFFICE OF BOARD OF SELECTMEN

James R. Dearden, Chairman
Henry S. Johnston
Frank T. Raleigh, Secretary

January 24, 1939

TO WHOM IT MAY CONCER:

THIS is to certify that the Town of West Springfield is the owner of all land situated in said Town and located north of the North End Bridge between the highway known as Riverdale Street and the Connecticut River and extending to a point opposite White Church Hill, so-called, and said Town of West Springfield, acting through its Board of Selectmen duly authorized, hereby grants to the United States of America full authority to enter upon said land to construct flood prevention projects thereon.

Very truly yours,

James R. Dearden
Frank T. Raleigh

Board of Selectmen of the
Town of West Springfield

SEAL

SECTION G. RIVERDALE DIKE, WEST SPRINGFIELD.

WHEREAS, pursuant to the provisions of the Act of August 18, 1941 (Public Law 228, Seventy-seventh Congress) funds have been authorized to be appropriated for local protection works under the comprehensive plan for the Connecticut River Basin approved in the Act of June 28, 1938, said plan having been modified by House Document numbered 724, Seventy-sixth Congress, third session, to include the Riverdale Dike Project, so-called, in the Town of West Springfield.

WHEREAS, the United States of America, through the Corps of Engineers of the War Department, having jurisdiction of construction of said flood control project, and in accordance with the policy of the federal government that no money shall be expended on the construction of any project until States, political subdivisions thereof, or other responsible local agencies have given assurances satisfactory to the Secretary of War that they will (a) provide without cost to the United States all lands, easements, and rights-of-way necessary for the construction of the project, except as otherwise provided herein; (b) bear the expense of local drainage works; (c) hold and save the United States free from damages due to the construction works; (d) maintain and operate all the works after completion in accordance with regulations prescribed by the Secretary of War; and

WHEREAS, the Board of Selectmen of the Town of West Springfield by virtue of the authority vested in it under a motion duly passed by a Special Town Meeting held on November 9, 1945 and by virtue of the authority vested in it by the General Laws of the Commonwealth of Massachusetts is authorized to accept on behalf of the Town of West Springfield the offer of the United States of America to construct certain works of improvement for flood protection of the said Town of West Springfield, the said Board of Selectmen is authorized to enter into such agreements with the United States as it may request as evidence of the Town's formal acceptance.

NOW, THEREFORE, in order to comply with the established policy of the federal government pertaining to the construction of flood control projects, and in consideration of the construction by the United States, and of the benefits to accrue from the work of improvement, The Town of West Springfield hereby assures the Secretary of War as follows:

(a) That the Town of West Springfield will furnish, without cost to the United States, all lands, easements and rights-of-way, necessary for the construction of the said Riverdale Dike Project. The lands, easements and rights-of-way which the Town of West

Springfield shall furnish shall include those needed for the construction of dikes, for borrow pits and spoil disposal areas, for access roads, and all other rights in, upon, through or over private property which are required by the United States in connection with the construction of the project. Maps showing the lands, easements, or rights-of-way needed in the prosecution of the work will be obtained by the Town of West Springfield from the United States. Detailed property surveys and title searches necessary to acquire the land or interests therein will be performed by the Town of West Springfield.

(b) That the Town of West Springfield will bear the expense of local drainage works.

(c) That the Town of West Springfield will hold and save the United States, its officers and employees, free from all claims for damages and from all liability due to the construction works;

(d) That the Town of West Springfield will maintain and operate without expense to the United States all of the works after completion, in accordance with regulations prescribed by the Secretary of War.

(e) That it is understood by the Town of West Springfield that the United States is not committed or obligated in any way to complete said flood control work or any part thereof.

IN WITNESS WHEREOF, we, Henry S. Johnston, Reed C. Aseltine and Howard M. Teece, the Board of Selectmen of the Town of West Springfield, under authority of said Special Town Meeting and the General Laws of the Commonwealth of Massachusetts, have hereunto set our hands and caused the common seal of the Town of West Springfield to be affixed hereto this tenth day of January, A.D. 1946.

ATTEST

/s/ Victoria F. Allen
Town Clerk Pro Tem

TOWN OF WEST SPRINGFIELD

By/s/ Henry S. Johnston

/s/ Reed C. Aseltine

/s/ Howard M. Teece
Board of Selectmen

Recommended as satisfactory assurances.

/s/ R.A. Wheeler
Lieutenant General, Chief of Engineers
United States Army

Accepted as satisfactory assurances.

By direction of the Secretary of War:

/s/ George DeGraaf
Colonel, G.S.C.
Assistant

FLOOD PROTECTIVE WORKS, WEST SPRINGFIELD, MASS.
DIKE INSPECTION REPORT
FOR PERIOD _____

1. Embankment.

a. Date inspected by superintendent. _____
b. Grassed surfaces.
(1) How many times mowed in period? _____
(2) Are all areas well sodded? _____
c. Riprapped surfaces.
(1) Is all riprap in place? _____
(2) Has all brush and weeds been cut? _____
d. Are there any burrowing animal holes in dike? _____
e. Public use of dike.
(1) Are there any paths on dike? _____
(2) Has right-of-way been used for dumping or storage of materials? _____
f. What is condition of toe drains? _____
g. Describe deficiencies, including location, and state corrective measures planned. _____

_____

_____

_____

2. Concrete Wall and Structures.

a. Date inspected by superintendent. _____
b. Wall and structures
(1) Any evidence of surface deterioration? _____
(2) Any development of cracks in period? _____
(a) Any evidence of movement of wall at crack? _____
(3) Any evidence of settlement of wall? _____
c. Joints
(1) Any cracking or spalling of concrete at joints? _____
(2) Are joints well filled with mastic? _____
d. What is condition of toe drains? _____
e. Foreshore protection? _____
(1) Is riprap in place? _____
f. Describe deficiencies, including location, and state corrective measures planned. _____

_____

_____

_____

3. Drainage Structures.

a. Date inspected by superintendent. _____

b. Valves and gates.

(1) Were valves and gates trial operated? _____

(2) Were they in good operating condition? _____

(3) Were any props in the flap valves? _____

c. Were concrete structures in good condition? _____

d. Were pipe lines and catch basins clean and in good operating condition? _____

e. Were relief wells flushed out? _____

f. Were pipe lines and catch basins flushed out? _____

g. Describe deficiencies including location, and state corrective measures planned. _____

_____

_____

_____

Have all deficiencies noted in previous Inspection Report been corrected? _____

Date _____ Signed _____
Superintendent

FLOOD PROTECTIVE WORKS, WEST SPRINGFIELD, MASS.
TIMBER CLOSURE STRUCTURE INSPECTION REPORT
FOR PERIOD _____

Closures

	Marine Stop-Log No. 1	Marine Stop-Log No. 2	Chapin Street Stop-Log
a. Concrete			
b. Metal Parts			
c. Timbers			
d. Repairs Needed			
e. Parts Needing Paint			
f. Date of Last Trial Erection			
g. Sand Bags Available			

Check items if found satisfactory.

If everything is not in order, explain below:

_____

_____

_____

Date _____ Signed _____
Superintendent

FLOOD PROTECTIVE WORKS, WEST SPRINGFIELD, MASS.
ALUMINUM CLOSURE STRUCTURE INSPECTION REPORT
FOR PERIOD _____

Closures

	Stop-Log "N"	Stop-Log "E"	Stop-Log "S"
a. Concrete	_____	_____	_____
b. Metal Parts	_____	_____	_____
c. Repairs Needed	_____	_____	_____
d. Date of Last Trial Erection	_____	_____	_____
e. Date of Last Settlement Check*	_____	_____	_____
f. Sand Bags Available	_____	_____	_____
g. Storage Shelter	_____	_____	_____

Check items if found satisfactory.

If everything is not in order, explain below:

_____

_____

_____

*Settlement plugs are set in top of concrete abutments.

Date _____ Signed _____
Superintendent

FLOOD PROTECTIVE WORKS, WEST SPRINGFIELD, MASS.
PUMPING STATION INSPECTION REPORT
FOR PERIOD _____

1. Structure.

a. Are any windows broken? _____
b. Any leak or faulty condition in roof? _____
c. What is condition of brickwork? _____
d. Is any painting required? _____
e. Are all fixtures in good condition? _____
f. Has there been any filling or slope wash in the storage pond? _____
g. Describe deficiencies and state corrective measures planned. _____

2. Equipment.

a. Pumps, motors and engines.
(1) Has equipment been trial operated bi-weekly? _____
(2) Are all parts well lubricated? _____
(3) Date of engine oil change. _____

b. Motor insulation resistance test.
(1) Date of test. _____
(2) Insulation resistance at _____ °F.

Motor	Megohms
Riverdale Sta.	_____
Bridge St. Sta.	_____

c. Heating.
(1) Has temperature of station been kept above 55°F? _____
d. Metal parts.
(1) Is there any evidence of rust? _____
(2) Are all metal parts well painted? _____
e. Gates - give date of inspection and trial operation. _____
f. Describe deficiencies and state corrective measures planned. _____

Have all deficiencies noted in previous Inspection Report been corrected? _____

Date _____ Signed _____
Superintendent

APPENDIX "D"

DRAWINGS

	Plate
Project Map of Local Protection Works	V
STANDARD HIGH WATER MAINTENANCE METHODS	
Sack Dike or Topping	I
Model Sack Dike or Topping	IA
Lumber & Sack Topping	II
Sand Boil	III
Effects of Sand Boils on Levee	IIIA
Sacking Sloughs	IV
Detail of Stop-Log Closure	IVA
Emergency Flash Boards	IVB
OPERATIONS	
West Springfield Dike	
General Plan & Operations Chart	VA
Riverdale Dike	
General Plan & Operations Chart	XLII
PLANS, PROFILES AND DETAILS	
West Springfield Dike	
North of North End Bridge	VI to VIII
North End Bridge to Memorial Bridge	IX to XVII
Memorial Bridge to Sta 56+87	XVIII to XXII
Sta 56+87 to Agawam Bridge	
Plan Showing Manholes & (Type A) Relief Wells	XXIIIA
Plan & Profile No. 1	XXIIIB
Plan & Profile No. 2	XXIIIC
Plan & Profile - Drains "A & B"	XXIIID
Typical Cross Sections No. 1	XXIV
Typical Cross Sections No. 2	XXV
Details of Trenches and Headwalls	XXVI
Drainage Details	XXVIA
Relief Wells and Piezometer Details	XXVIB
Miscellaneous Details	XXVIC
North of Agawam Bridge	XXVII to XXX
Warren Street Pumping Station	XXXI to XXXIV
Bridge Street Pumping Station	XXXV to XXXVIII
Circuit Avenue Pumping Station	XXXIX to XLI
Riverdale Dike	
Drainage System	XLIII to XLVII
Wayside Pumping Station	XLVIII & XLIX
Riverdale Pumping Station	L & LI
Stop-Log Structures	LII
Embankment & Relief Wells	LIII

Revised Dec 1953

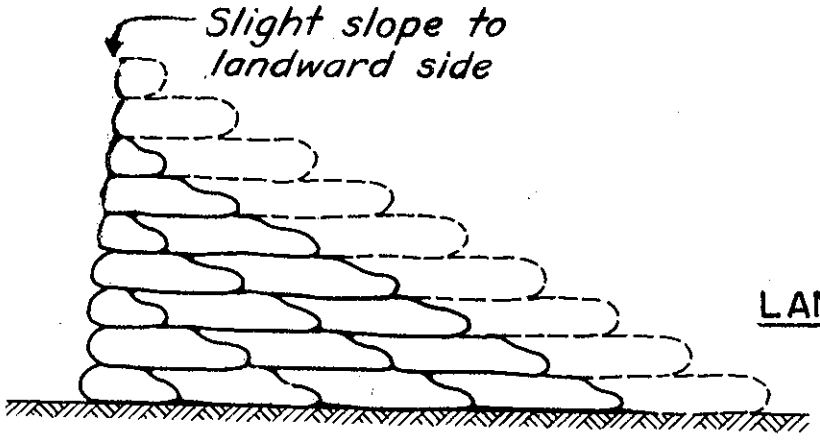

SECTION

Note: Sacks should be lapped at least 1/3 all ways and well mauled or tamped into place.

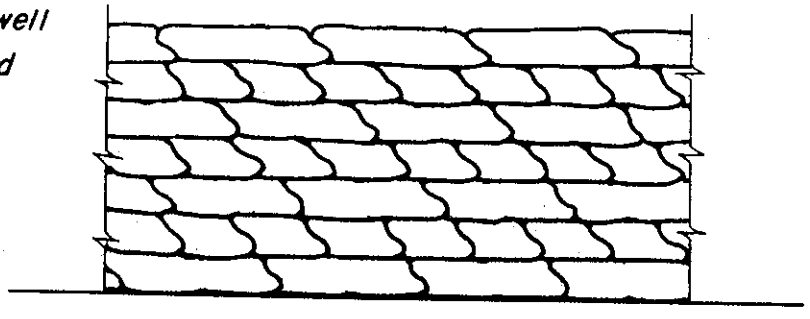

RIVERSIDE ELEVATION

SACKS REQUIRED PER 100' STA.
100 lb. "Feed" Sacks - 1 Cu. Ft. Each

Approx. Hgt. Sack Dike	Sacks High	Required
1.5	3	300
2.0	4	750
3.0	6	1400
4.0	8	2250
5.0	10	3250
6.0	12	4500
7.0	14	5950
8.0	16	7600

SACK DIKE OR TOPPING
STANDARD HIGH WATER
MAINTENANCE INSTRUCTION

U. S. ENGINEER OFFICE, PROVIDENCE, R. I.

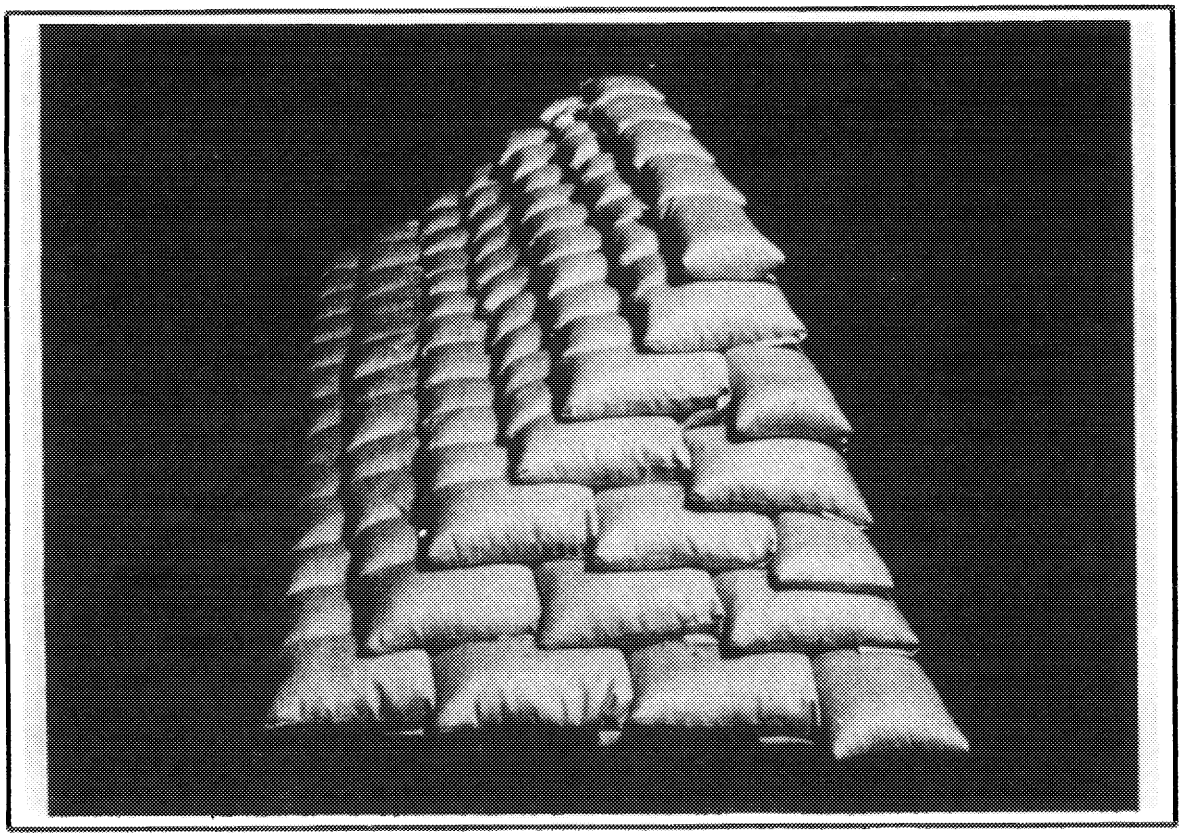

MODEL SACK DIKE OR TOPPING
Typical Section

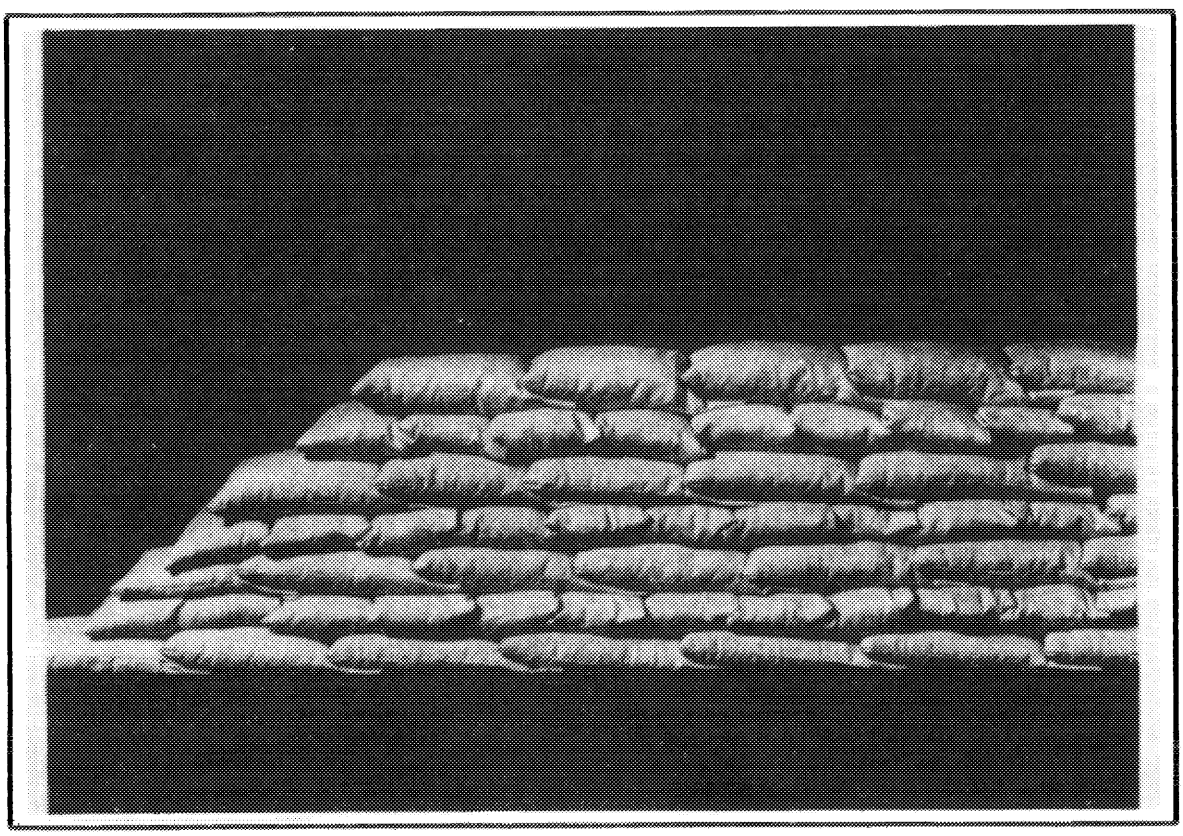

MODEL SACK DIKE OR TOPPING
Riverside View

FEB. 1951

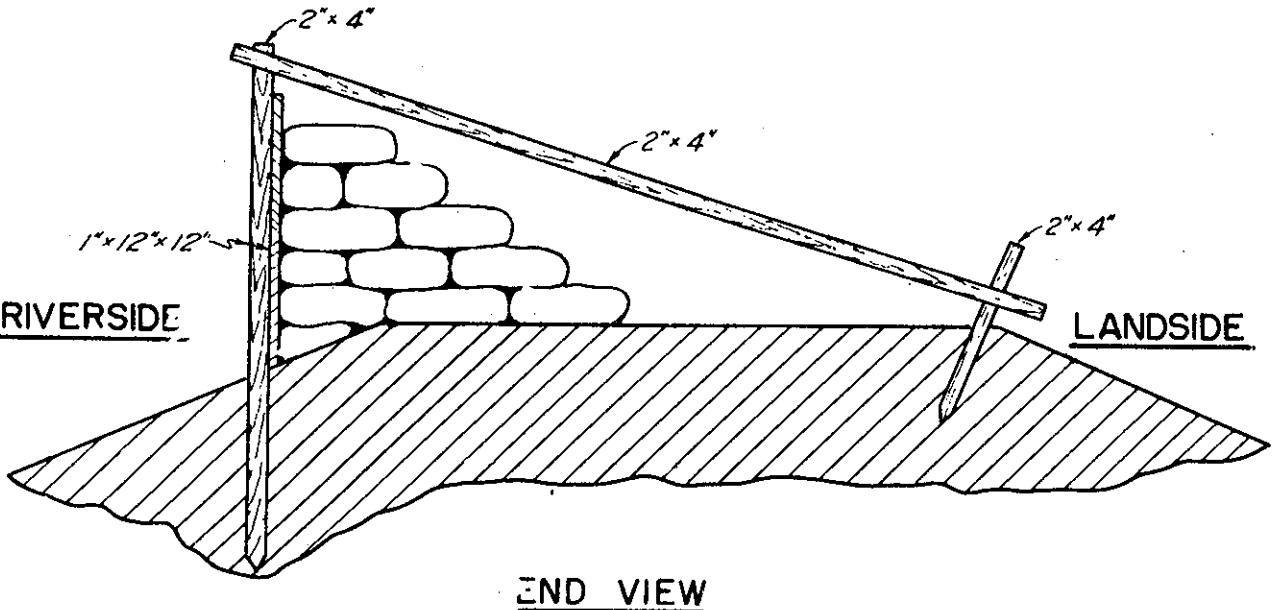

END VIEW

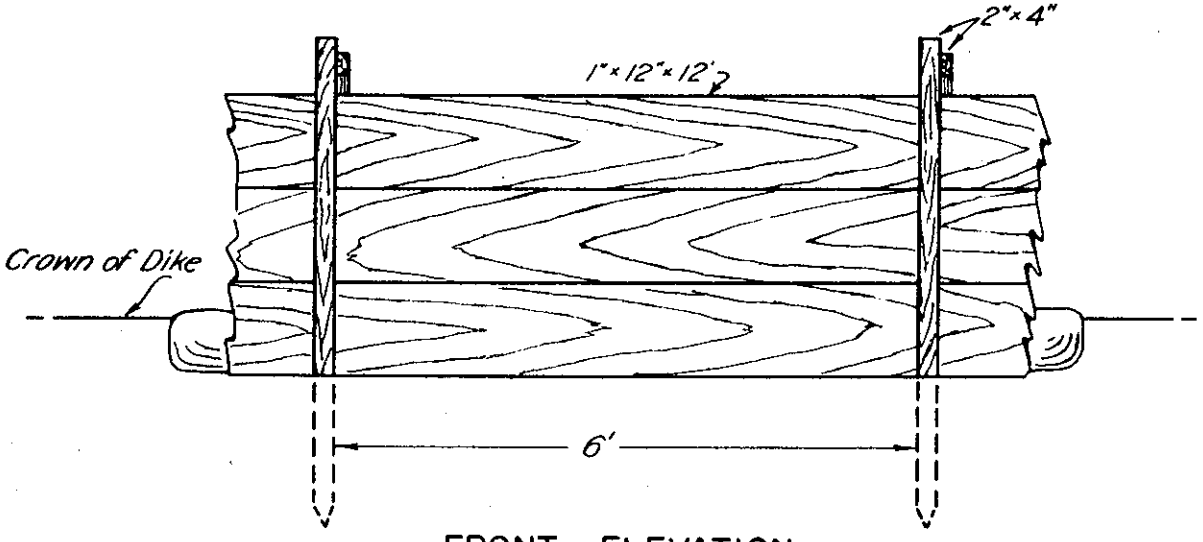

FRONT ELEVATION

BILL OF MATERIAL TO CONSTRUCT 100 FEET

25 pcs. 1"×12"×12'	17 pcs. 2"×4"×6'
17 pcs. 2"×4"×10'	17 pcs. 2"×4"×2'

LUMBER AND SACK TOPPING STANDARD HIGH WATER MAINTENANCE INSTRUCTION

U. S. ENGINEER OFFICE, PROVIDENCE, R. I.

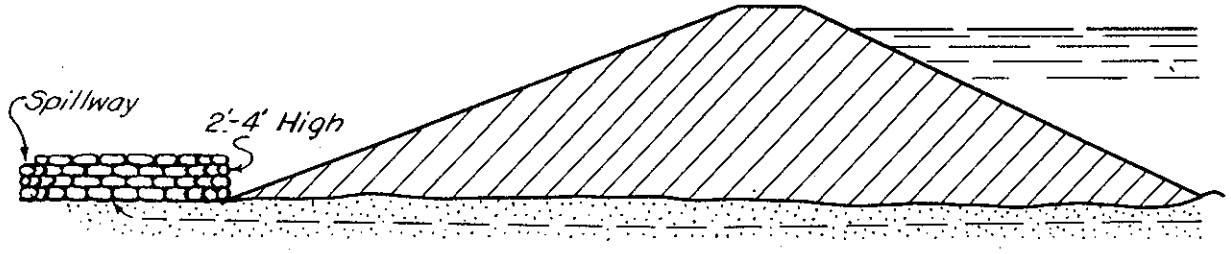

ELEVATION

Wall should be built on firm foundation, with width of base at least $1\frac{1}{2}$ times the height.
Be sure to place sacks on ground clear of sand discharge.
Tie into dike if boil is near toe.

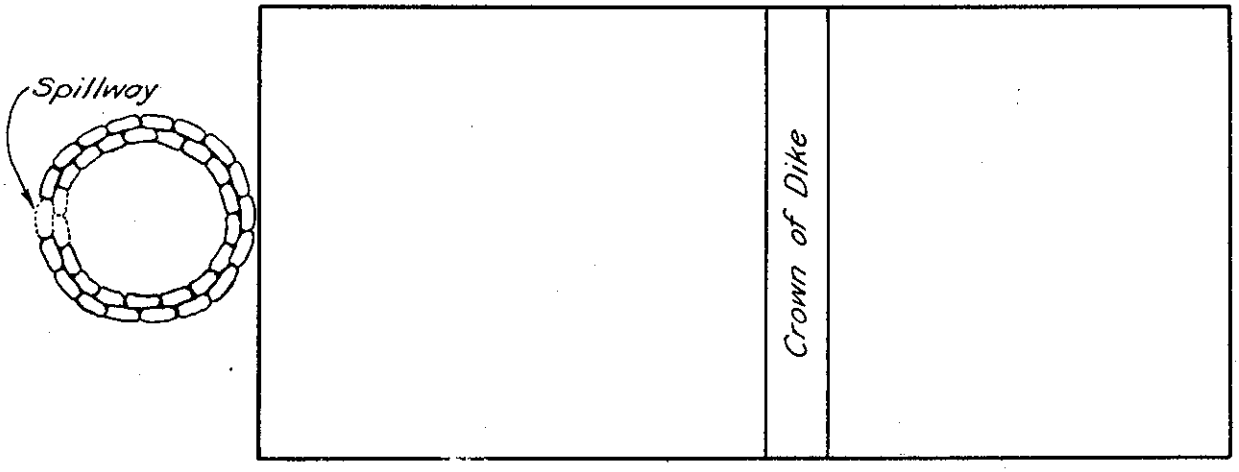

PLAN

Do not sack boil which does not put out material. Height of sack loop or ring should be only sufficient to create enough head to slow down flow through boil so that no more material is displaced and boil runs clear. Do not try to stop fully, flow through boil.

SAND BOIL
STANDARD HIGH WATER
MAINTENANCE INSTRUCTION

U. S. ENGINEER OFFICE, PROVIDENCE, R. I.

EFFECTS OF SAND BOILS ON LEVEE

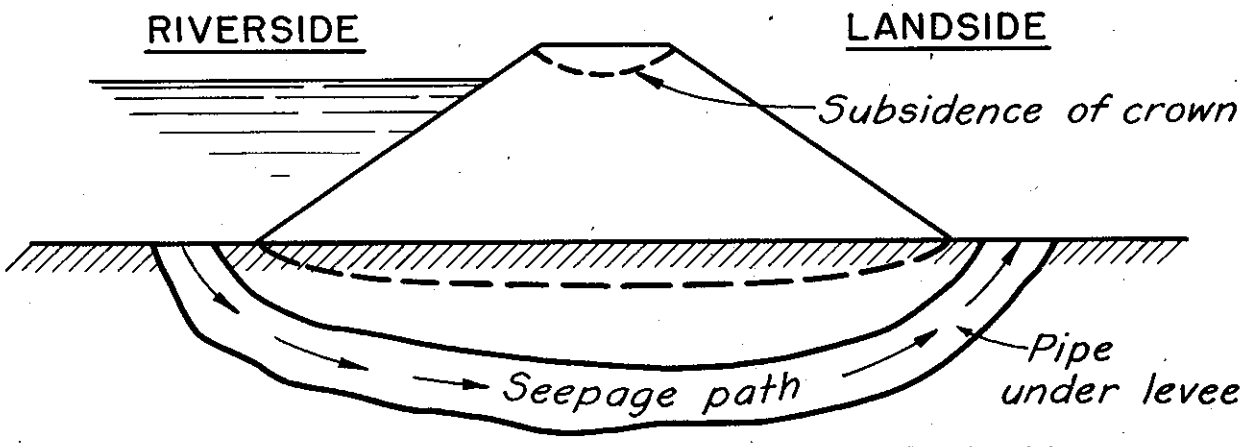

DEVELOPMENT OF PIPE UNDER LEVEE

Fig. 1

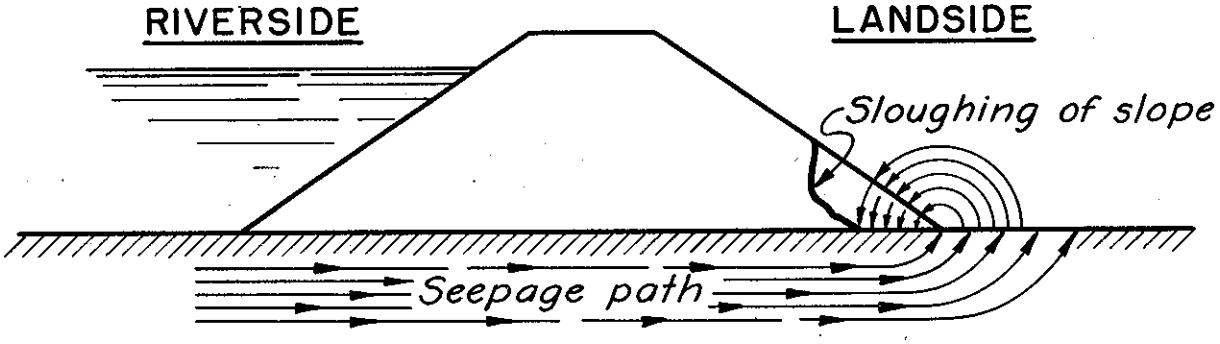

SLOUGHING OF LANDSLIDE SLOPE DUE TO RAVELLING AND UNDERCUTTING OF TOE

Fig. 2

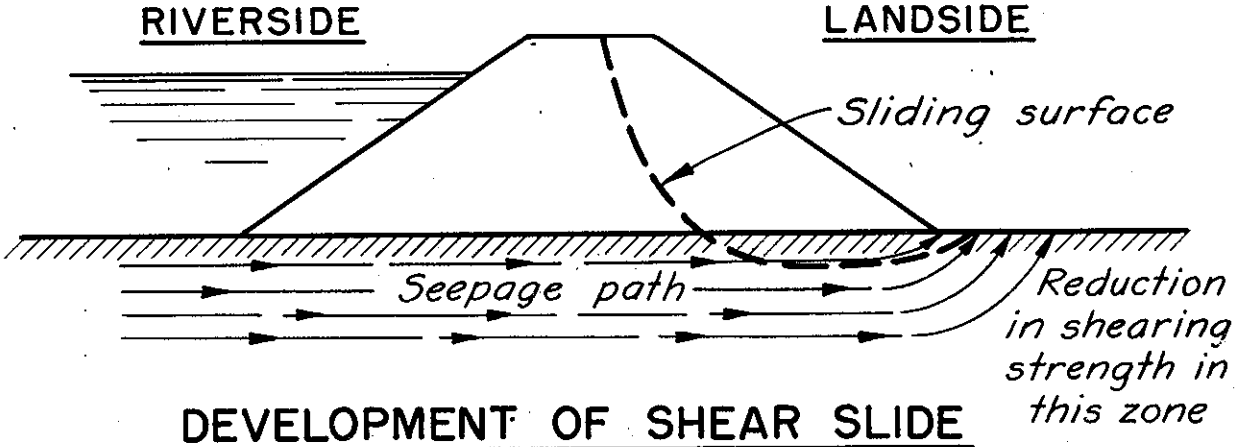

DEVELOPMENT OF SHEAR SLIDE

Fig. 3

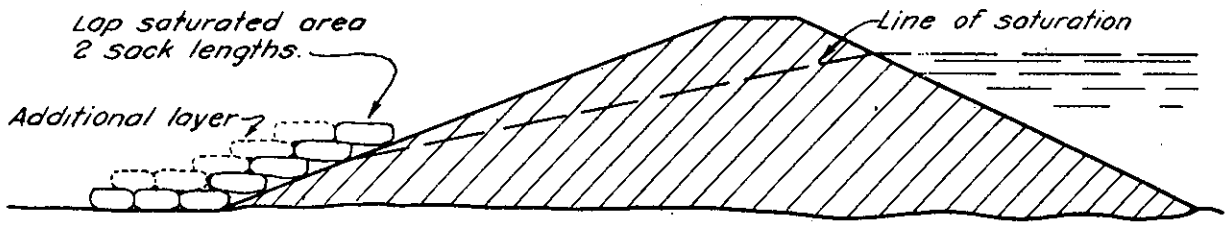

ELEVATION

Number of layers determined by velocity of seepage and amount of material being carried.

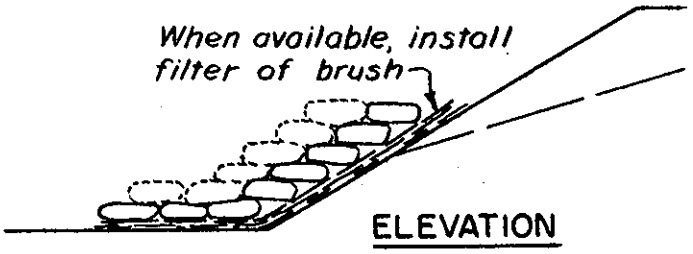

ELEVATION

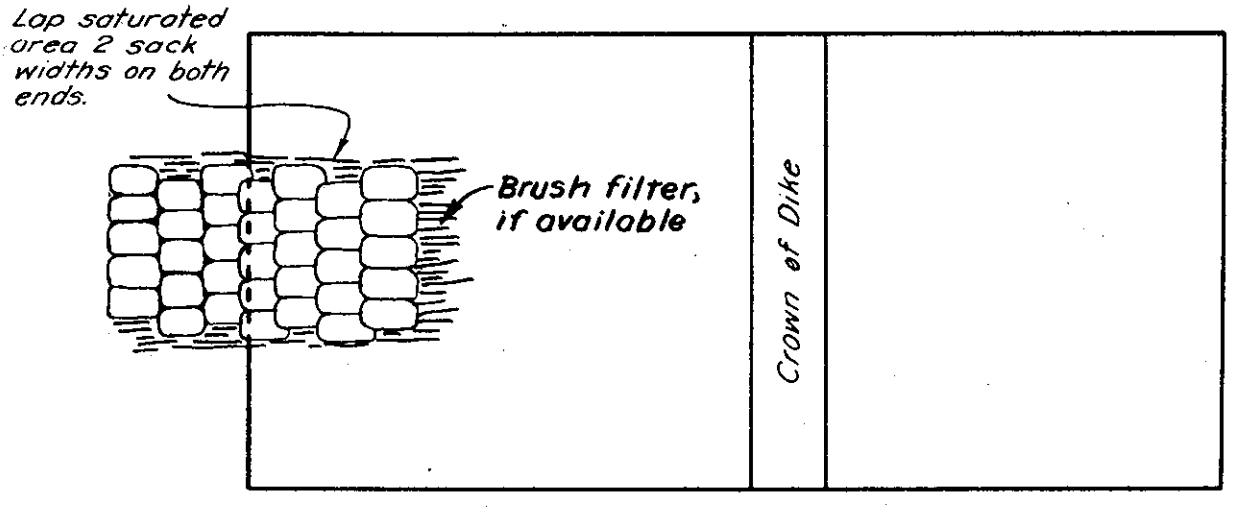

PLAN

Sacks should be laid shingle fashion and not moulded into place.

SACKING SLOUGHS
STANDARD HIGH WATER
MAINTENANCE INSTRUCTION

U.S. ENGINEER OFFICE, PROVIDENCE, R.I.

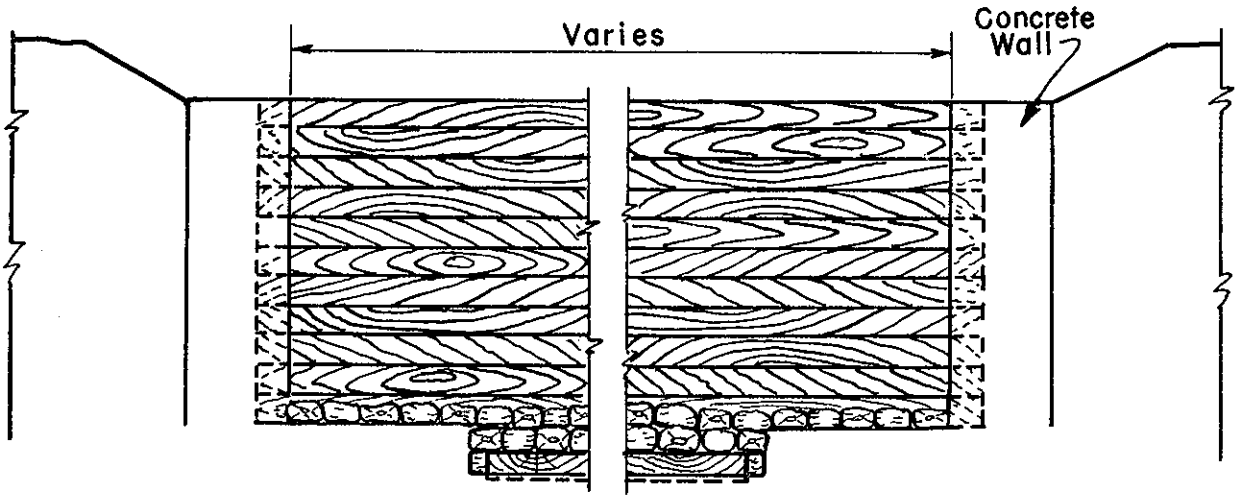

ELEVATION VIEW R.R. STOP-LOG CLOSURE

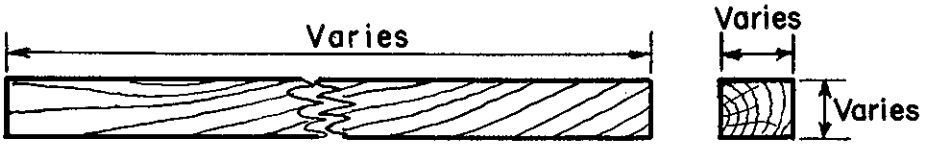

DETAIL OF STOP LOG

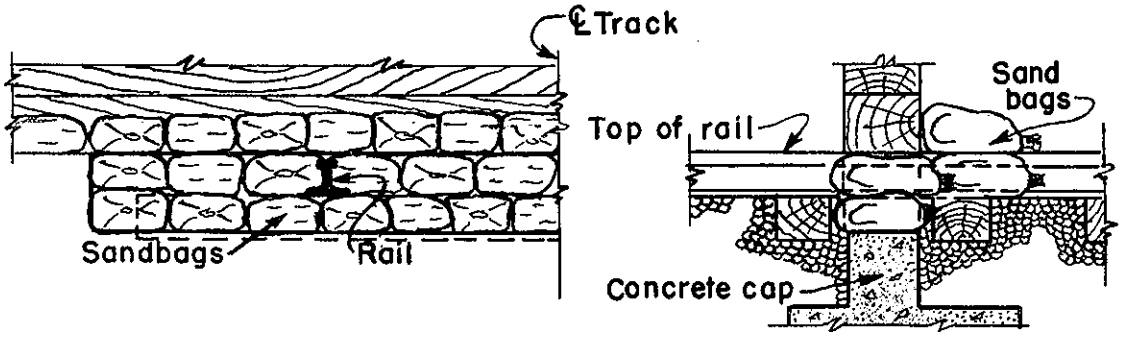

DETAIL OF STOP LOG CLOSURE

NOTE:
Wedge top timbers in place to prevent floating. Canvas or sisal craft paper should be tacked on river side face of timbers after erection to prevent excessive leakage.

BILL OF MATERIALS		
For one 8'-0" panel. Regular wall section.		
Uprights	10 pcs.	2" x 4" x 6'-0"
Vert. brace	5 "	2" x 4" x 3'-0"
Stringers	5 "	1" x 6" x 8'-0"
Upper ties	5 "	1" x 6" x 2'-3"
Lower ties	5 "	1" x 4" x 2'-3"
Diagonals	5 "	1" x 4" x 3'-6"
Sheathing	6"	1" x 6" x 8'-0" or random widths to make up 36"
Wedges	8	(½" to 1½") x 2" x 1'-0" = 1'-3" x 2" x 4'-0"
For one 8'-0" panel. Pilaster section Same as above list except:		
Substitute one upright 2" x 4" x 2'-9" for one 2" x 4" x 6'-0"		
Add one stringer piece 2" x 4" x 4'-2"		

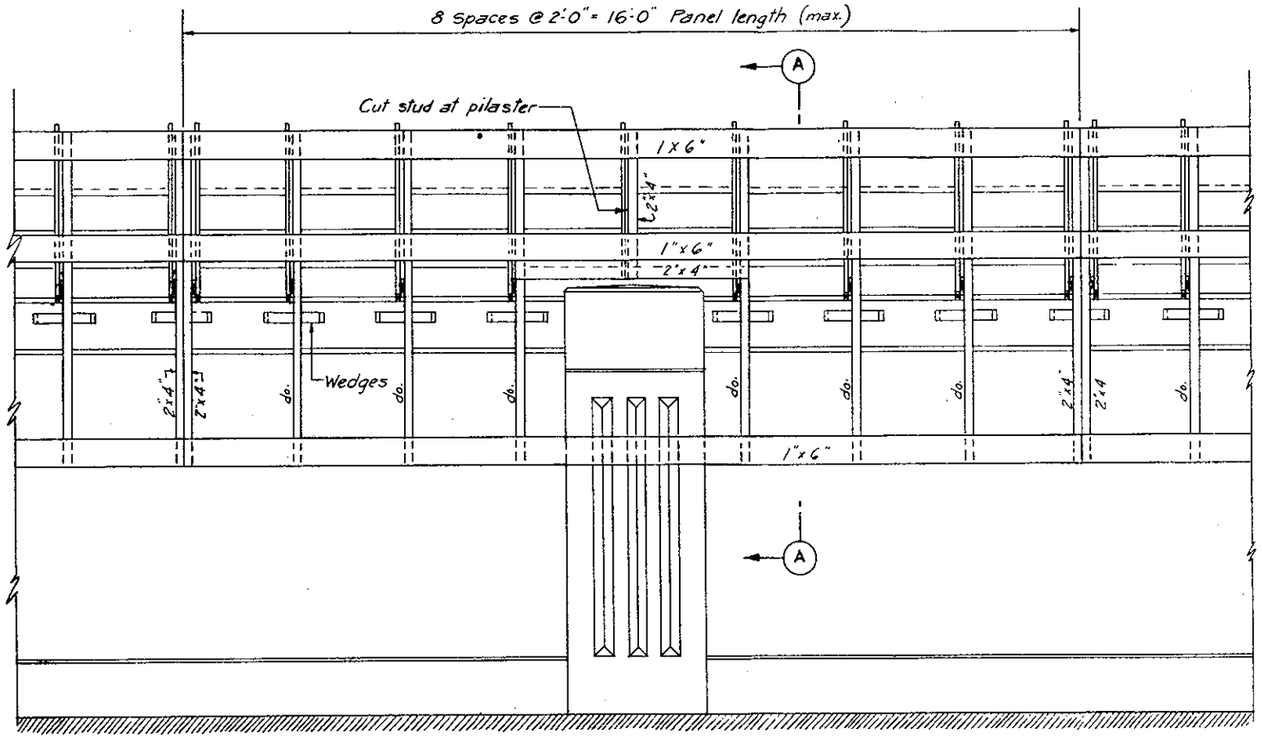

LANDSIDE ELEVATION

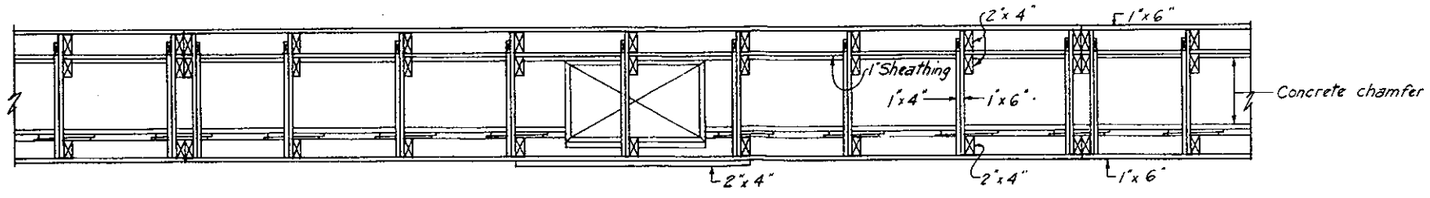

PLAN

LANDSIDE RIVERSIDE

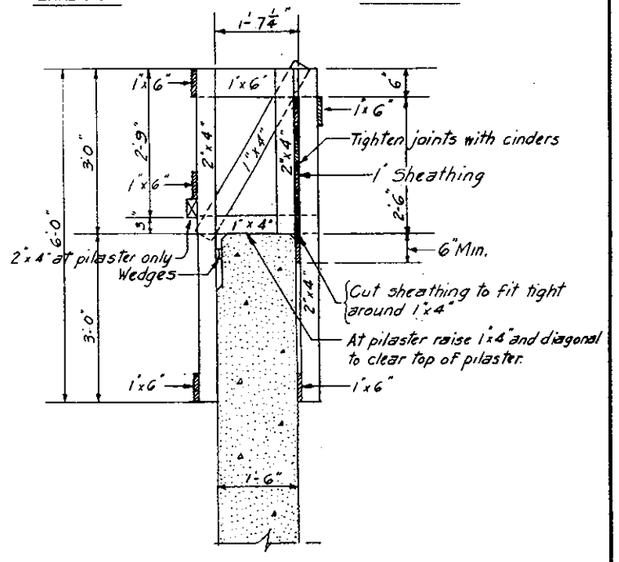

SECTION A-A

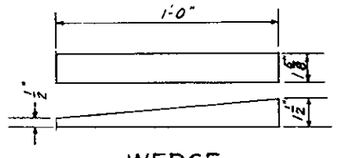

WEDGE

CONNECTICUT RIVER FLOOD CONTROL

EMERGENCY FLASH BOARDS

FOR FLOOD WALLS

CONNECTICUT RIVER MASSACHUSETTS

FLOOD EMERGENCY MOBILIZATION PLAN

PREPARED BY
CORPS OF ENGINEERS, U.S. ARMY
OFFICE OF THE DIVISION ENGINEER
NEW ENGLAND DIVISION, BOSTON, MASS.

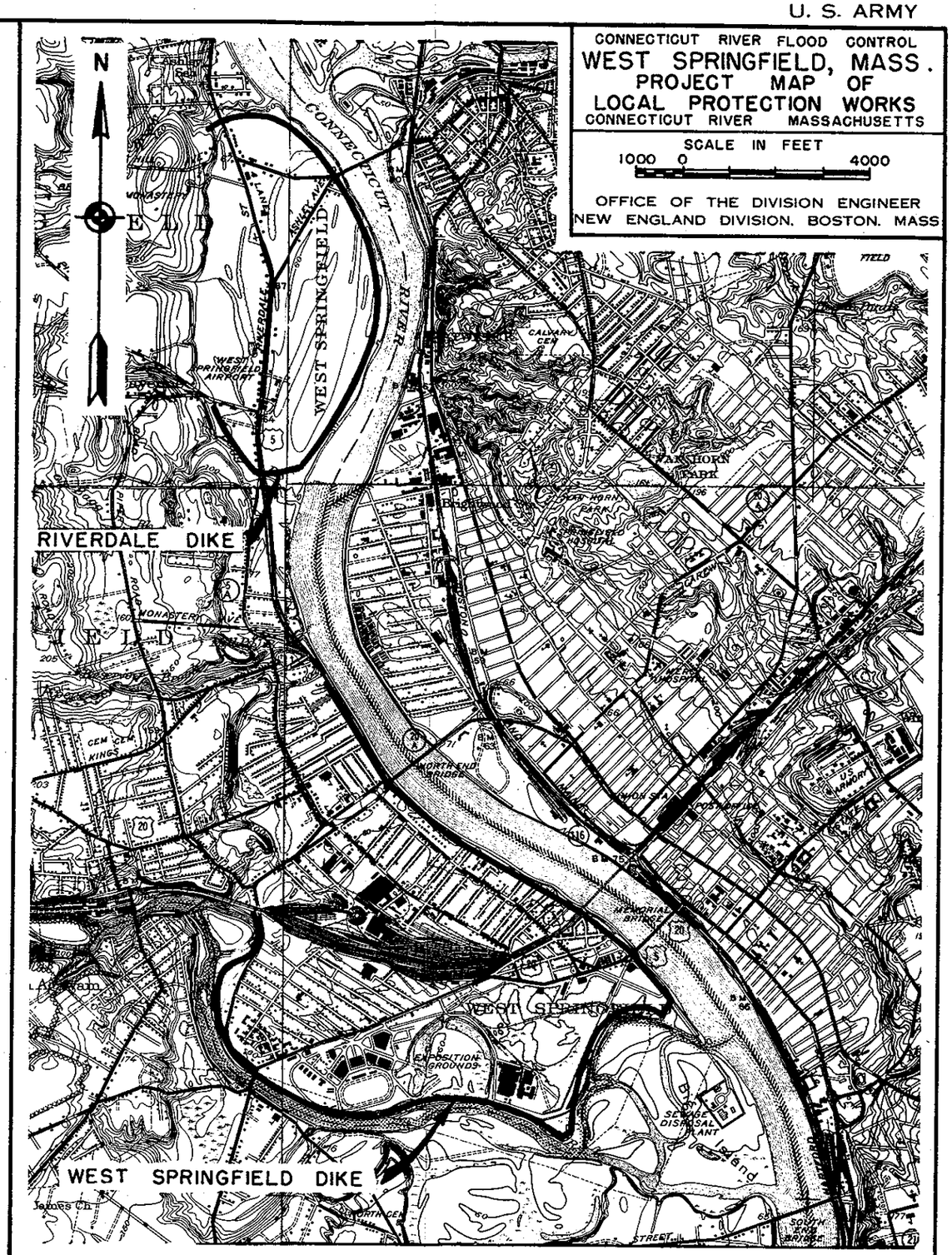
CONNECTICUT RIVER FLOOD CONTROL
WEST SPRINGFIELD, MASS.
PROJECT MAP OF
LOCAL PROTECTION WORKS
CONNECTICUT RIVER MASSACHUSETTS
SCALE IN FEET
1000 0 4000
OFFICE OF THE DIVISION ENGINEER
NEW ENGLAND DIVISION, BOSTON, MASS.
N
E
W
S
CONNECTICUT
RIVER
WEST SPRINGFIELD
RIVERDALE DIKE
WEST SPRINGFIELD DIKE
WEST SPRINGFIELD AIRPORT
CALVARY CEM
PARKHORN PARK
NORTH END BRIDGE
MEMORIAL BRIDGE
EXPOSITION GROUNDS
SEWAGE DISPOSAL PLANT
Island
SOUTH END BRIDGE
KINGS CEM
STREET

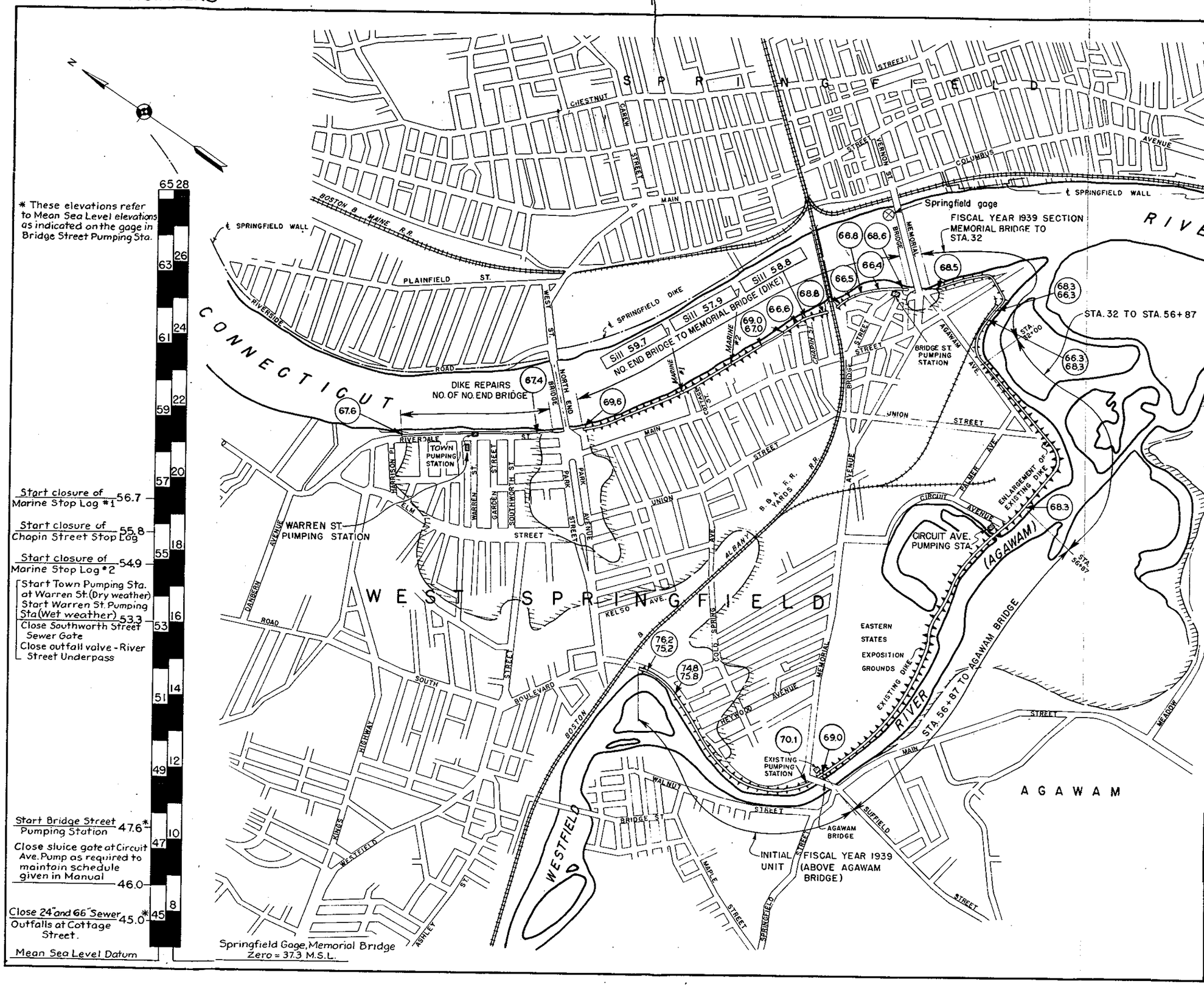

NOTES

The flood protection system constructed by U.S.E.D in West Springfield consists of earth dike, concrete walls, three stop log structures, and three pumping stations (Items WS 7a, b, and c). A pumping station on Riverdale Street opposite Warren Street and another at Agawam Bridge were constructed by the Town. All are the responsibility of the Town for maintenance and operation.

Elevations are based on Mean Sea Level datum

The zero of the Springfield gage is at El. 37.3 on Mean Sea Level datum.

Gage heights of previous major floods.

Nov. 1927	59.7
Mar. 1936	65.9
Sept. 1938	63.0

LEGEND

- Overflow Limits of March 1936 Flood
- Concrete Wall
- Earth Dike
- Pumping Station
- (68.3) Elevation of top of Dike or Wall
- Sill 59.7 Elevation of Stop Log Structure Sill

CONNECTICUT RIVER FLOOD CONTROL

WEST SPRINGFIELD DIKE.

GENERAL PLAN AND OPERATIONS CHART

CONNECTICUT RIVER, MASSACHUSETTS.

OPERATION AND MAINTENANCE MANUAL

PREPARED BY
CORPS OF ENGINEERS, U. S. ARMY.
OFFICE OF THE DIVISION ENGINEER
NEW ENGLAND DIVISION BOSTON, MASS.

DEC. 1950 - REVISED JUNE 1951

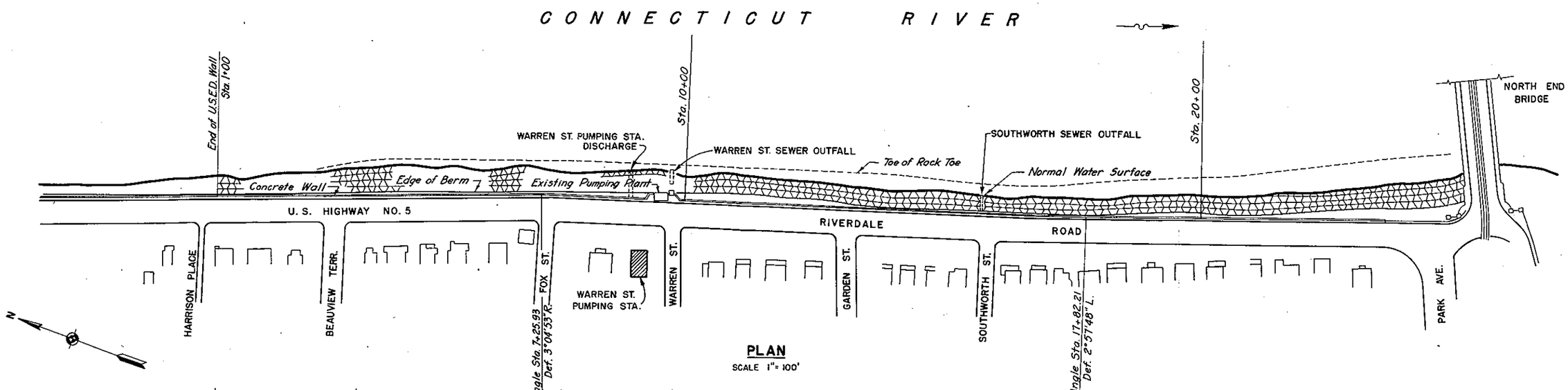

PLAN

SCALE 1" = 100'

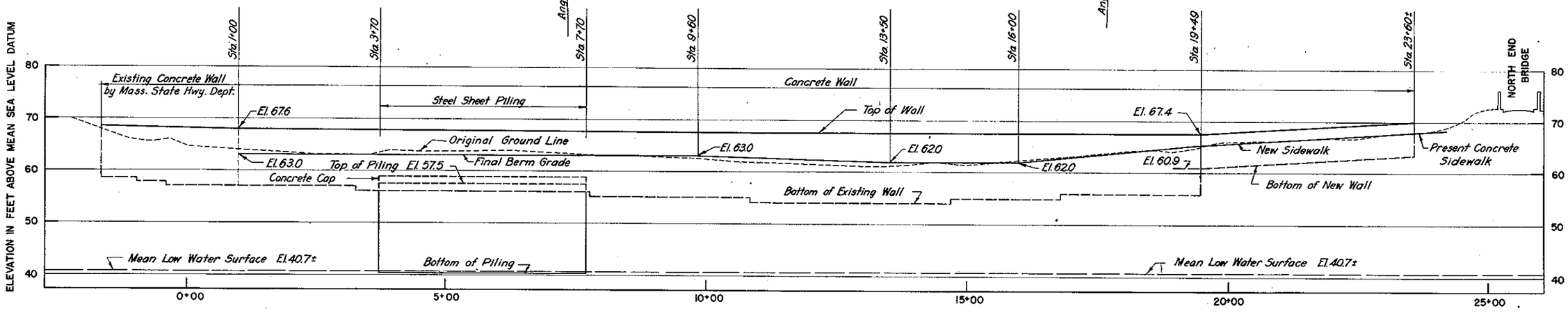

PROFILE

SCALE HOR. 1" = 100' VERT. 1" = 10'

DATE	REVISION	REV.BY	CK.BY	AP.BY

CONNECTICUT RIVER FLOOD CONTROL

WEST SPRINGFIELD DIKE

FROM NORTH END BRIDGE TO HARRISON PLACE

GENERAL PLAN AND PROFILE

WEST SPRINGFIELD, MASS.

CONNECTICUT RIVER, MASSACHUSETTS

SCALE 1 IN = 100 FT.

U. S. ENGINEER OFFICE, PROVIDENCE, R.I., DEC. 1938

OPERATION AND MAINTENANCE MANUAL

WEST SPRINGFIELD, MASS.

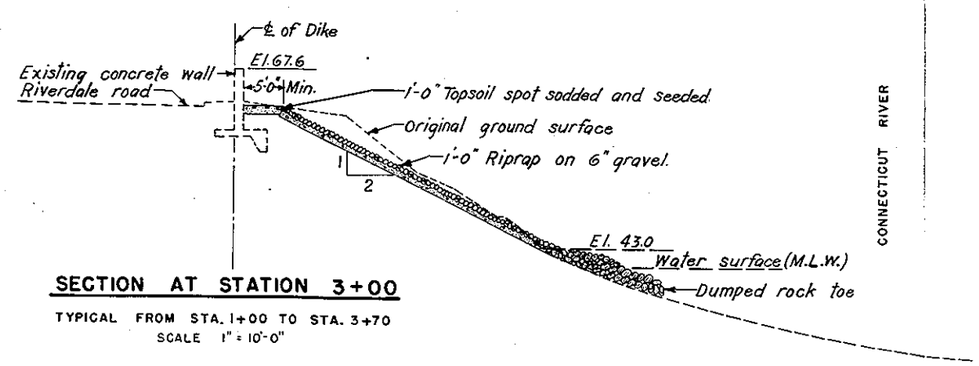

SECTION AT STATION 3+00

TYPICAL FROM STA. 1+00 TO STA. 3+70
SCALE 1" = 10'-0"

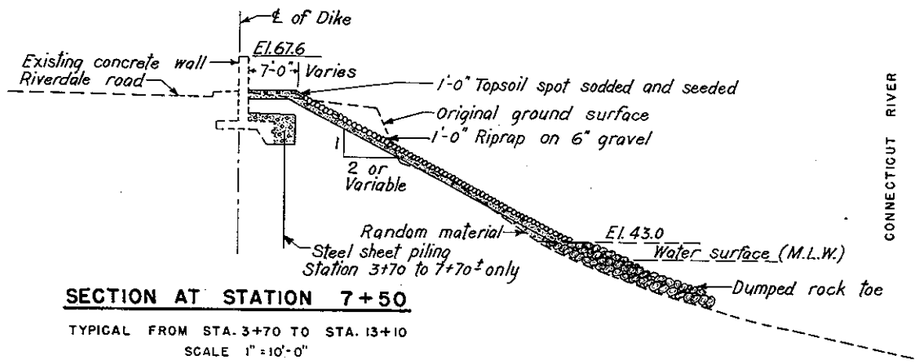

SECTION AT STATION 7+50

TYPICAL FROM STA. 3+70 TO STA. 13+10
SCALE 1" = 10'-0"

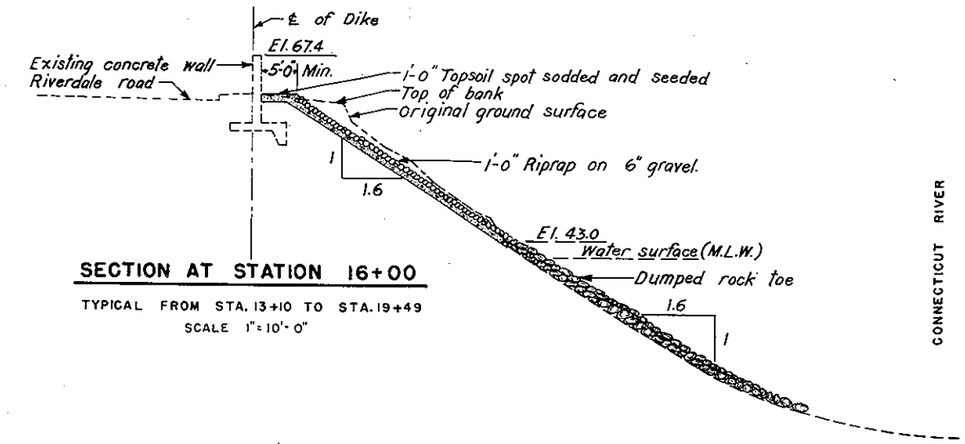

SECTION AT STATION 16+00

TYPICAL FROM STA. 13+10 TO STA. 19+49
SCALE 1" = 10'-0"

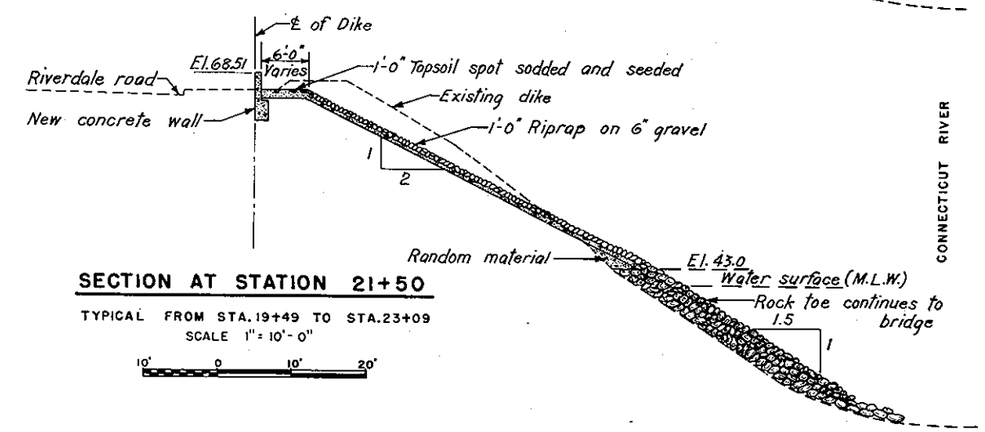

SECTION AT STATION 21+50

TYPICAL FROM STA. 19+49 TO STA. 23+09
SCALE 1" = 10'-0"

10' 0 10' 20'

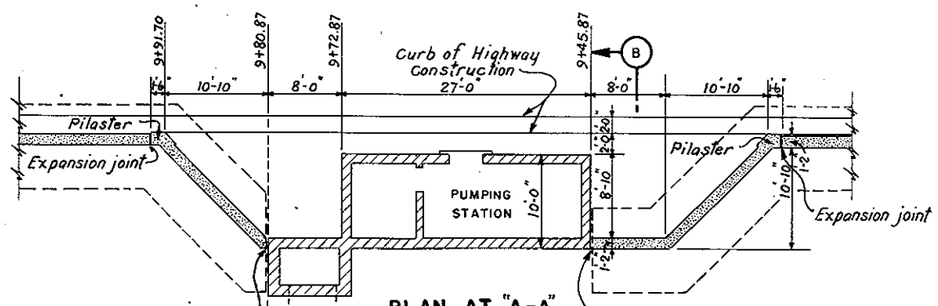

PLAN AT "A-A"

SCALE 1/8" = 1'-0"

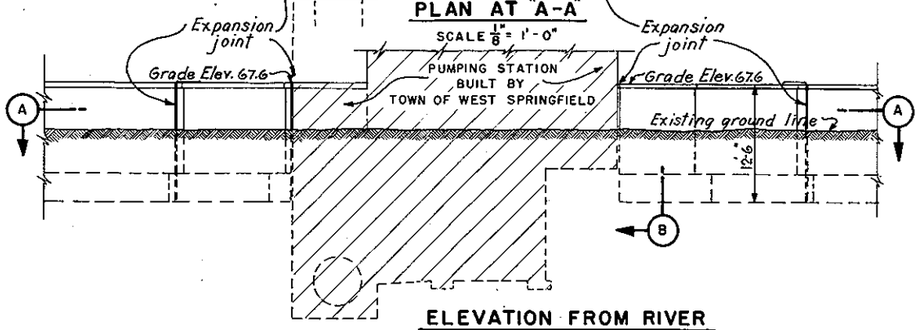

ELEVATION FROM RIVER

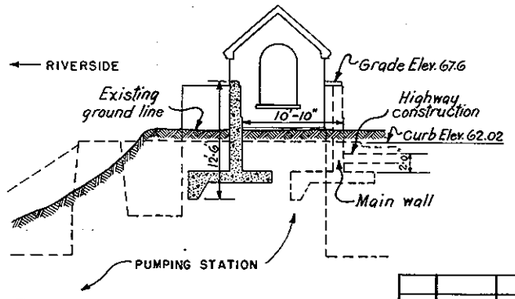

SECTION AT "B-B"

CONNECTICUT RIVER FLOOD CONTROL

WEST SPRINGFIELD DIKE

TYPICAL SECTIONS NO. 1

CONNECTICUT RIVER — MASSACHUSETTS

SCALE 1/8" = 1'-0"

4' 0 4' 8' 12' 16' 20'

U.S. ENGINEER OFFICE, PROVIDENCE, R.I.,

OPERATION AND MAINTENANCE MANUAL

WEST SPRINGFIELD, MASS.

PLATE VII

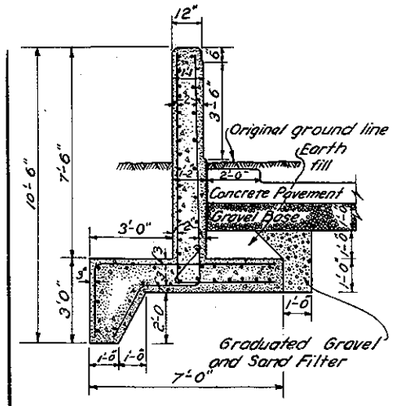

DETAILS OF 8'-6" WALL

SCALE $\frac{3}{8}$" = 1'-0"

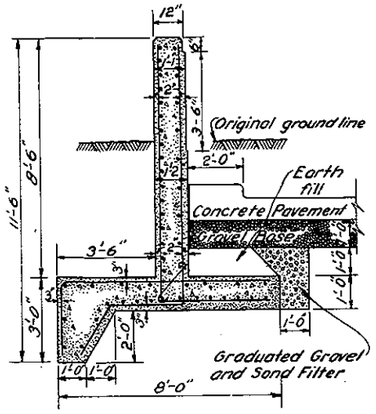

DETAILS OF 9'-6" WALL

SCALE $\frac{3}{8}$" = 1'-0"

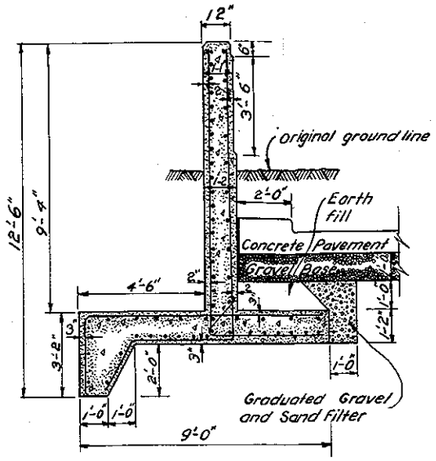

DETAILS OF 10'-6" WALL

SCALE $\frac{3}{8}$" = 1'-0"

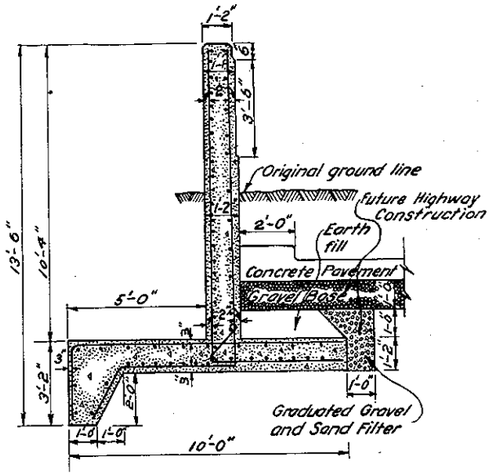

DETAILS OF 11'-8" WALL

SCALE $\frac{3}{8}$" = 1'-0"

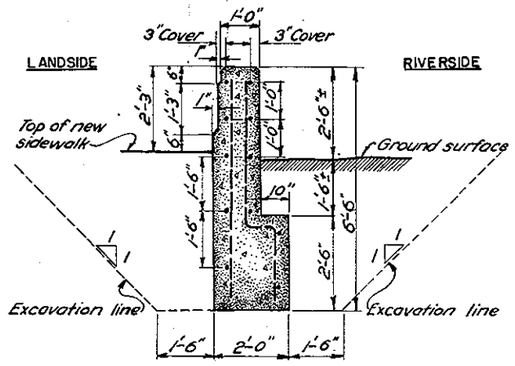

DETAILS OF WALL STA 19+49 TO 23+60

SCALE $\frac{1}{2}$" = 1'-0"

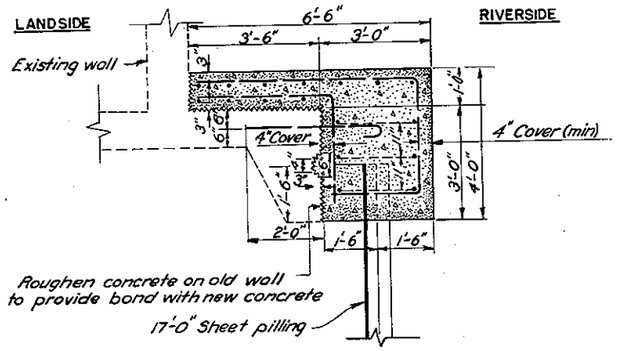

DETAIL OF CONCRETE CAP

FROM STA 3+70 TO STA 7+70

SCALE $\frac{1}{2}$" = 1'-0"

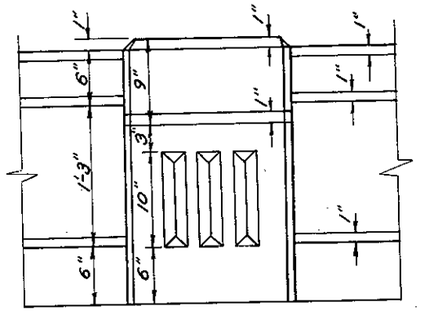

ELEVATION OF PILASTER

SCALE 1$\frac{1}{2}$" = 1'-0"

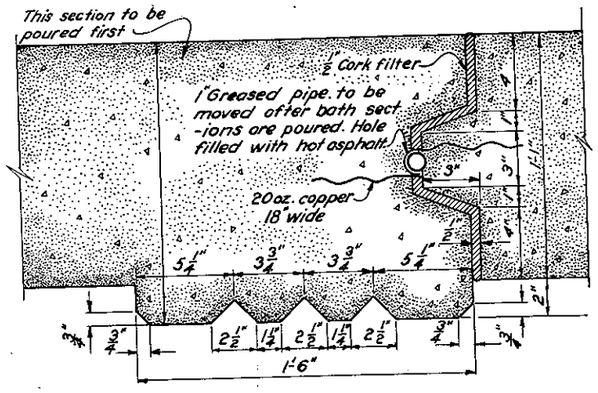

DETAIL OF EXPASION JOINT STA 19+ 50 TO STA. 23+60

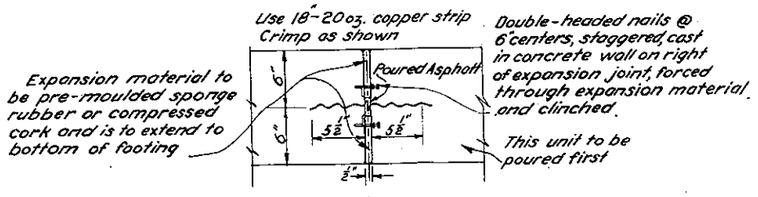

PLAN OF EXPANSION JOINT

STA. 1+00 TO STA 19+50

SCALE 1$\frac{1}{2}$" = 1 0

KEY	DATE	REVISION (indicated by △)	REV BY	CK BY	AP. BY

CONNECTICUT RIVER FLOOD CONTROL

WEST SPRINGFIELD DIKE

TYPICAL SECTION NO.2

CONNECTICUT RIVER — MASSACHUSETTS

SCALE $\frac{3}{8}$" IN = 1 FT

U.S. ENGINEER OFFICE PROVIDENCE R.I.

OPERATION AND MAINTENANCE MANUAL

WEST SPRINGFIELD, MASS.

PLATE VIII

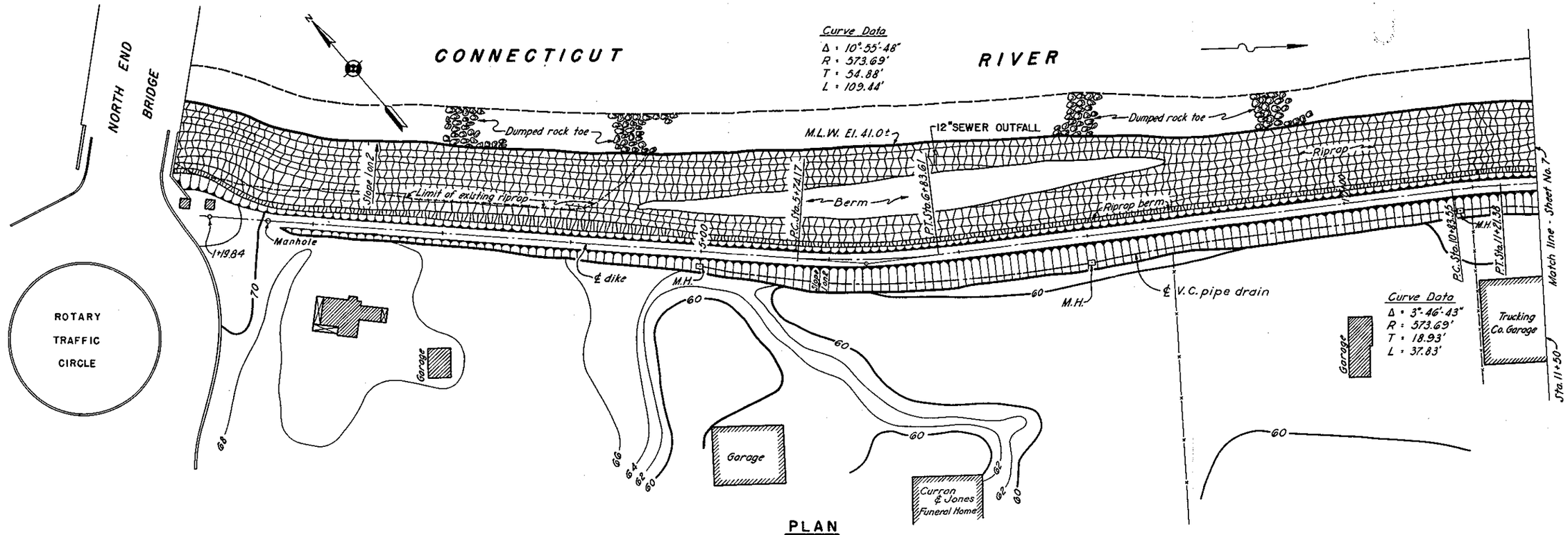

PLAN

SCALE: 1" = 40'

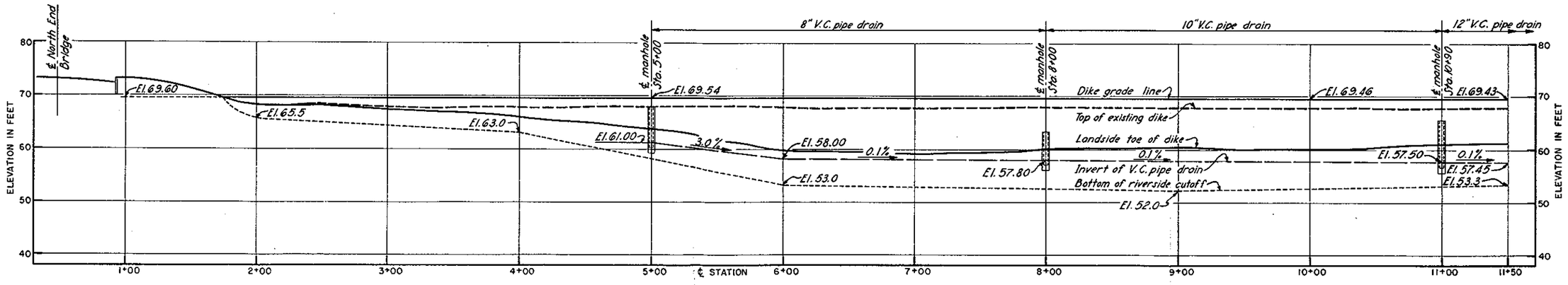

PROFILE

SCALE: HOR. 1" = 40' VERT. 1" = 10'

NOTES

Elevations refer to Mean Sea Level Datum.

CONNECTICUT RIVER FLOOD CONTROL

WEST SPRINGFIELD DIKE

MEMORIAL BRIDGE TO NORTH END BRIDGE

DETAIL PLAN AND PROFILE NO. 1

CONNECTICUT RIVER — MASSACHUSETTS

SCALE: 1 IN. = 40 FT.

U. S. ENGINEER OFFICE, PROVIDENCE, R. I., OCT. 1939

OPERATION AND MAINTENANCE MANUAL

WEST SPRINGFIELD, MASS.

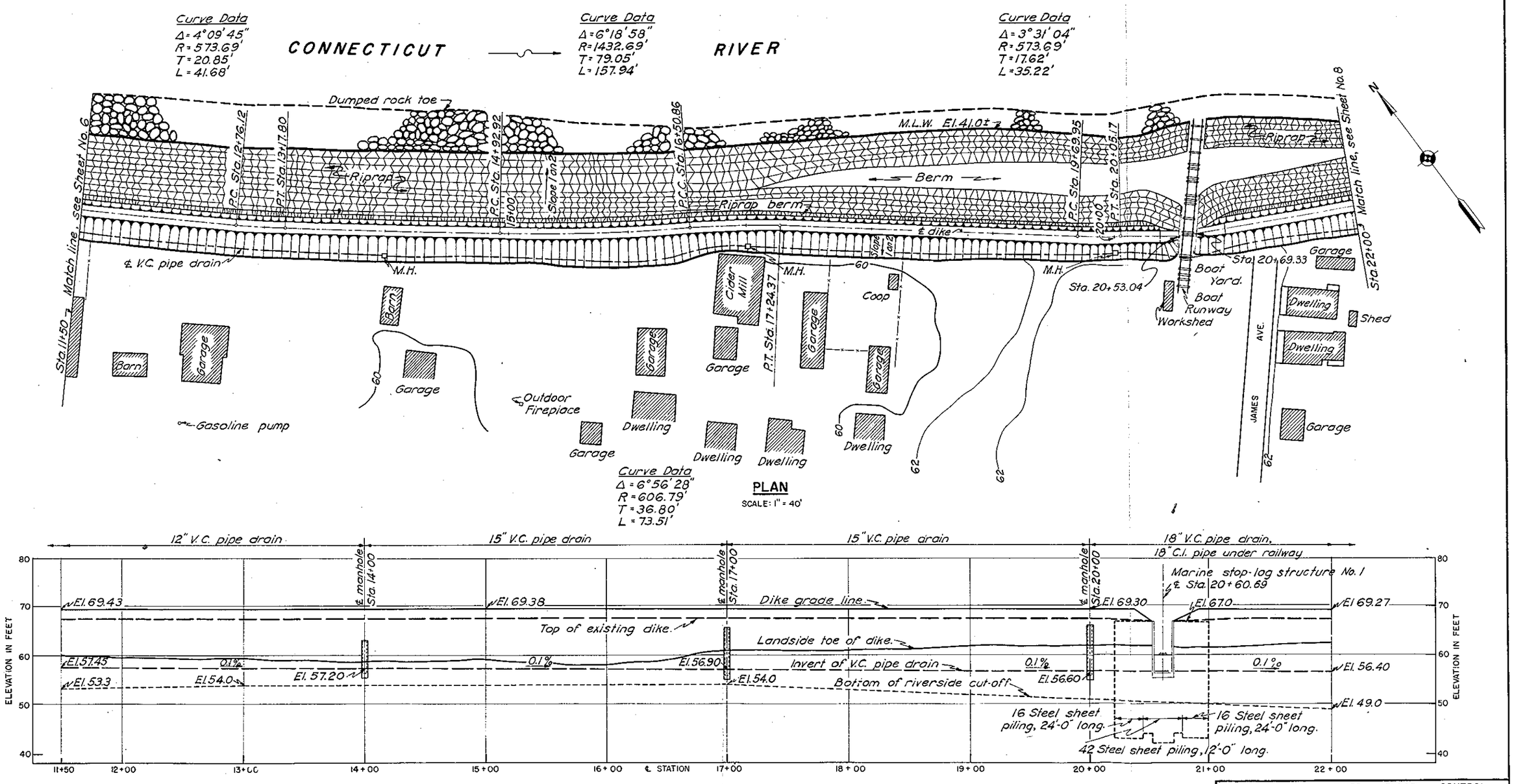

NOTE

Elevations refer to Mean Sea Level Datum.

CONNECTICUT RIVER FLOOD CONTROL

WEST SPRINGFIELD DIKE

MEMORIAL BRIDGE TO NORTH END BRIDGE

DETAIL PLAN AND PROFILE NO. 2

CONNECTICUT RIVER — MASSACHUSETTS

SCALE: 1 IN. = 40 FT.

U. S. ENGINEER OFFICE, PROVIDENCE, R. I. — OCT. 1939

OPERATION AND MAINTENANCE MANUAL

WEST SPRINGFIELD, MASS.

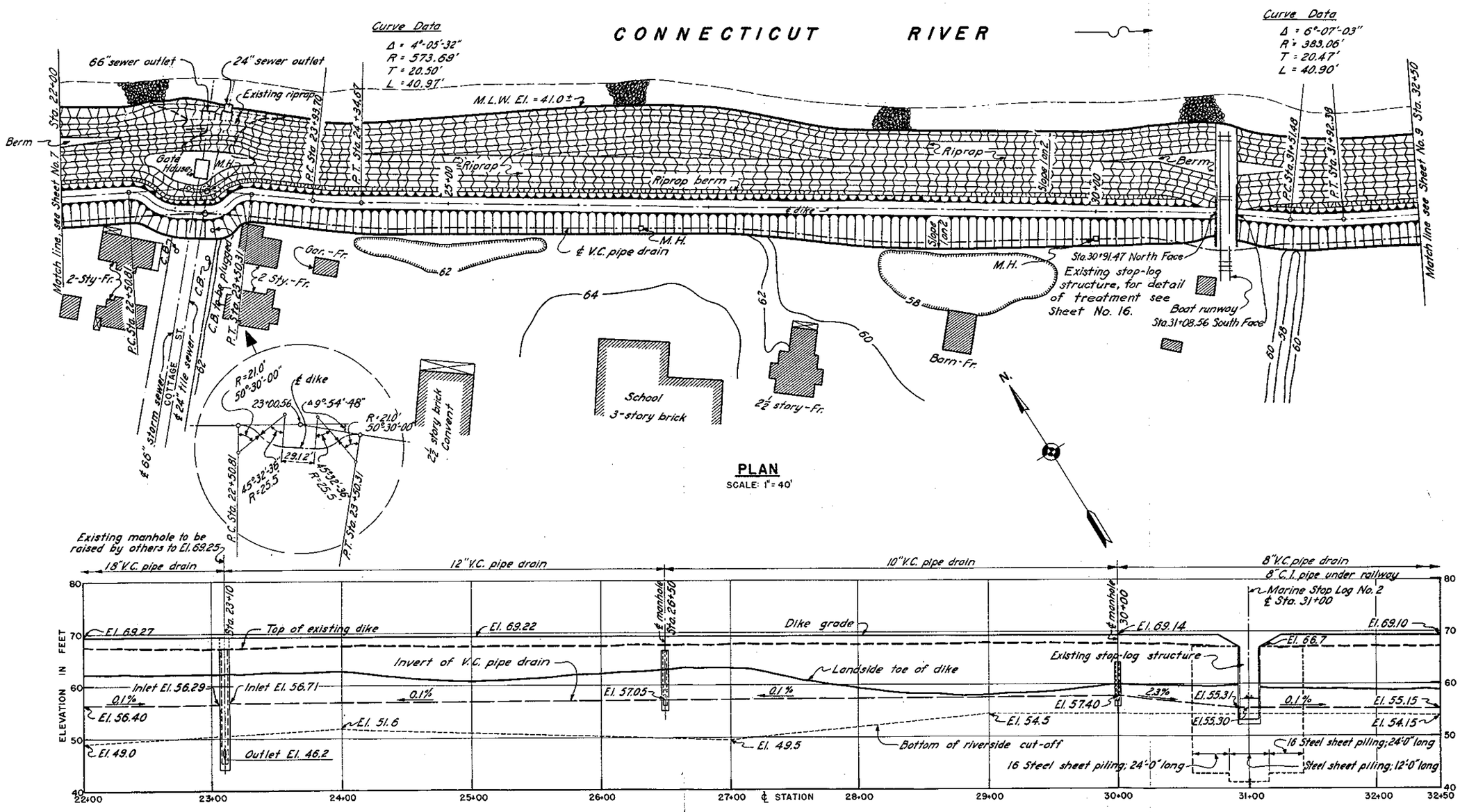

PLAN
SCALE: 1" = 40'

PROFILE
SCALE: HOR. 1" = 40'
VERT. 1" = 10'

NOTES

Elevations refer to Mean Sea Level Datum.

CONNECTICUT RIVER FLOOD CONTROL

WEST SPRINGFIELD DIKE

MEMORIAL BRIDGE TO NORTH END BRIDGE

DETAIL PLAN AND PROFILE NO. 3

CONNECTICUT RIVER — MASSACHUSETTS

SCALE: 1 IN. = 40 FT.

U. S. ENGINEER OFFICE, PROVIDENCE, R. I.,

OPERATION AND MAINTENANCE MANUAL

WEST SPRINGFIELD, MASS.

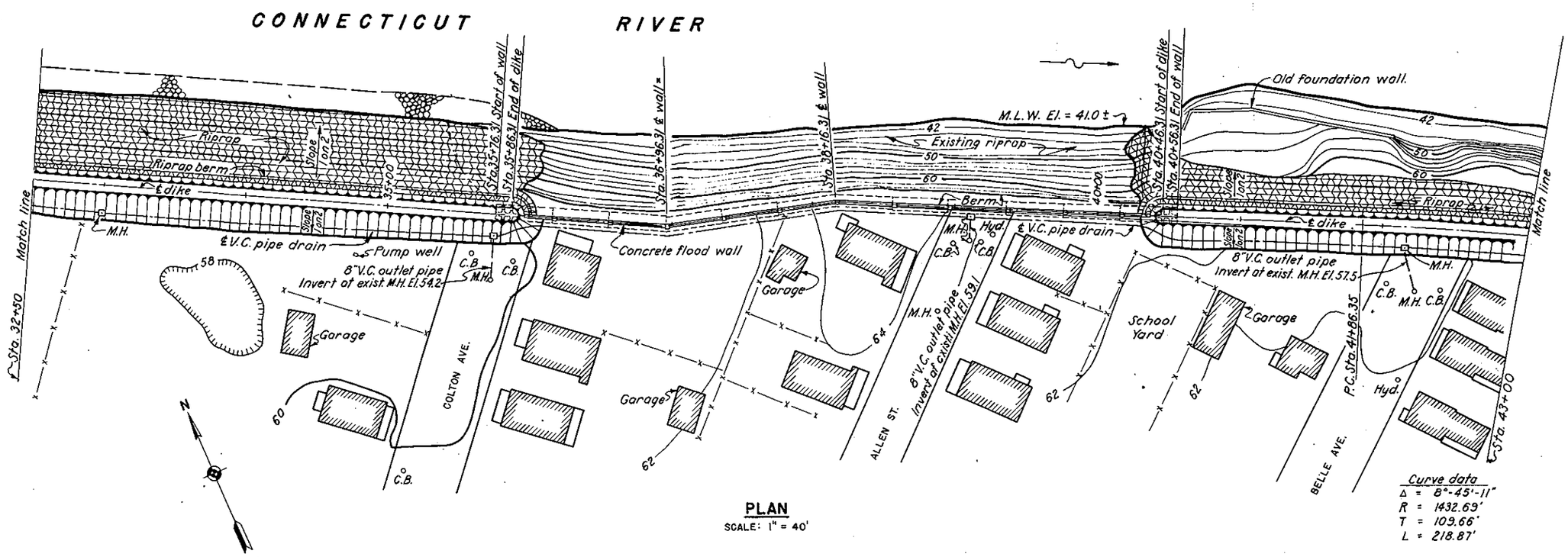

PLAN

SCALE: 1" = 40'

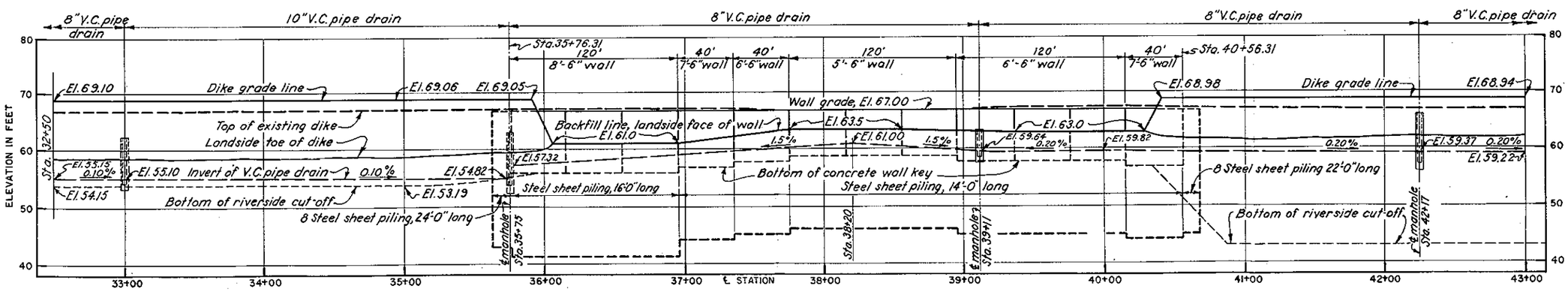

PROFILE

SCALE: HOR. 1" = 40'
VERT. 1" = 10'

NOTE

Elevations refer to Mean Sea Level Datum.

CONNECTICUT RIVER FLOOD CONTROL

WEST SPRINGFIELD DIKE

MEMORIAL BRIDGE TO NORTH END BRIDGE

DETAIL PLAN AND PROFILE NO. 4

CONNECTICUT RIVER — MASSACHUSETTS

SCALE: 1 IN. = 40 FT.

U. S. ENGINEER OFFICE, PROVIDENCE, R. I., OCT. 1939

OPERATION AND MAINTENANCE MANUAL

WEST SPRINGFIELD, MASS.

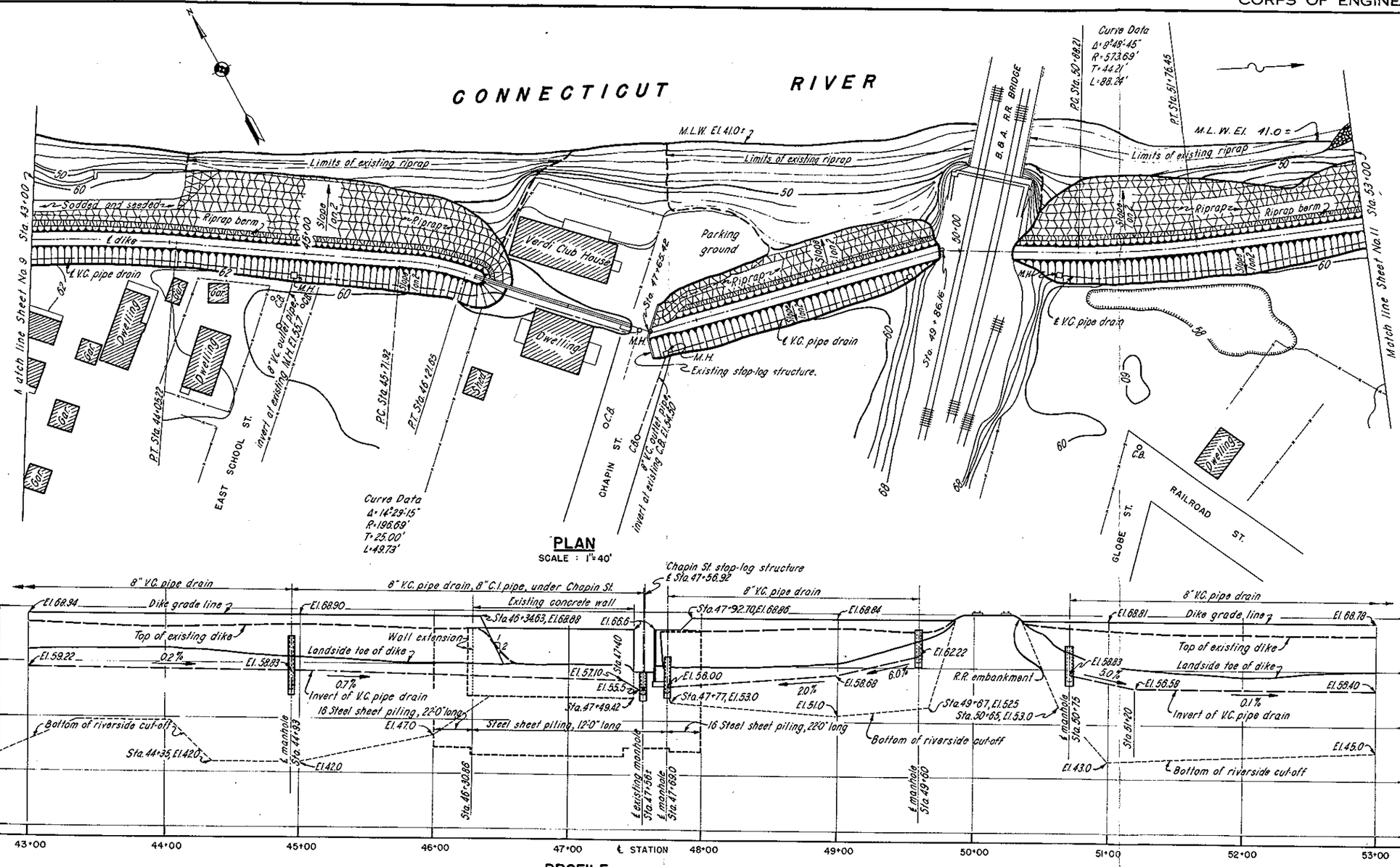

NOTES

Elevations refer to Mean Sea Level Datum.

CONNECTICUT RIVER FLOOD CONTROL

WEST SPRINGFIELD DIKE

MEMORIAL BRIDGE TO NORTH END BRIDGE

DETAIL PLAN AND PROFILE NO. 5

CONNECTICUT RIVER — MASSACHUSETTS

SCALE : 1 IN. = 40 FT.

U. S. ENGINEER OFFICE, PROVIDENCE, R. I., OCT. 1939

OPERATION AND MAINTENANCE MANUAL

WEST SPRINGFIELD, MASS.

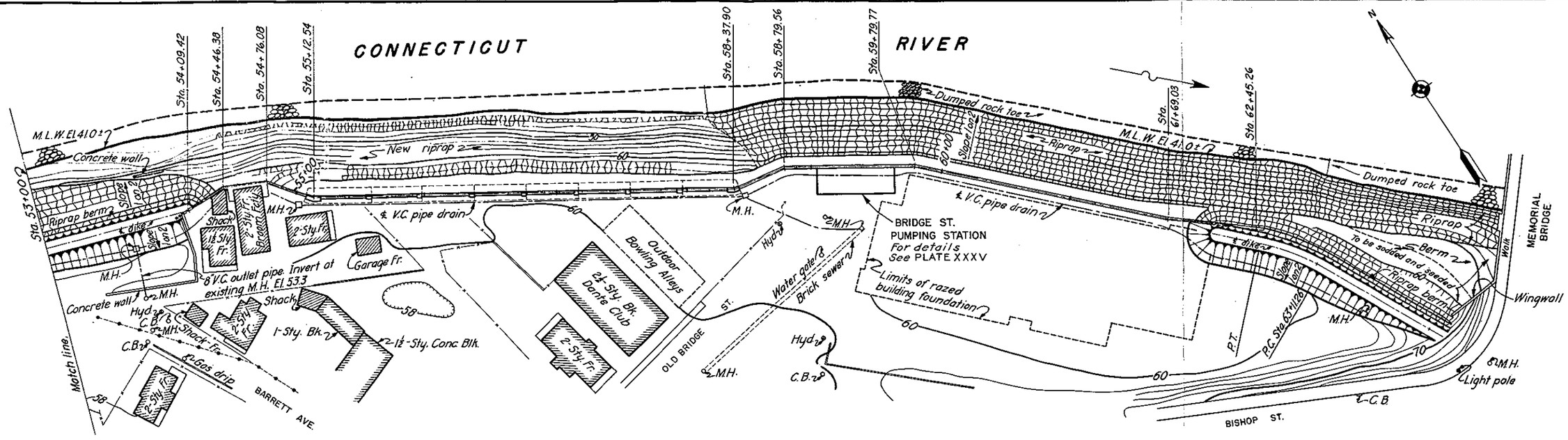

PLAN

SCALE: 1" = 40'

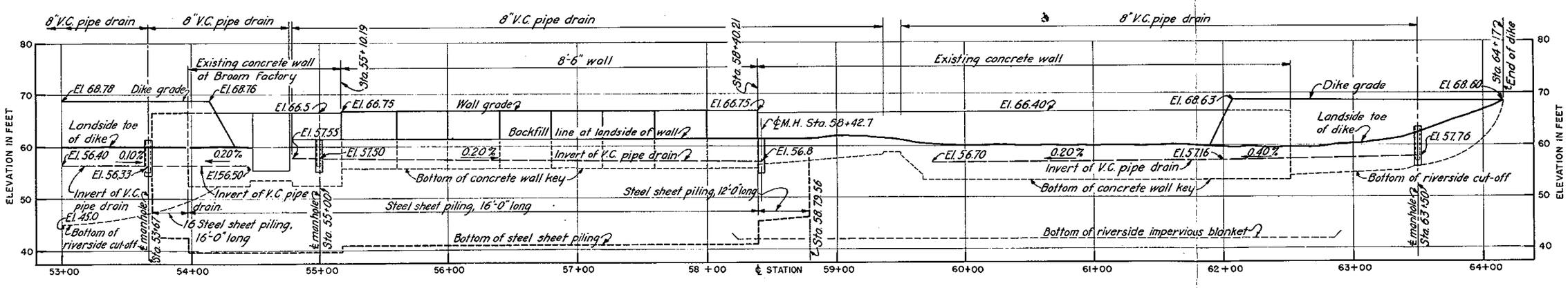

PROFILE

SCALE: HOR., 1" = 40'
VERT., 1" = 10'

NOTE

Elevations refer to Mean Sea Level Datum.

CONNECTICUT RIVER FLOOD CONTROL

WEST SPRINGFIELD DIKE

MEMORIAL BRIDGE TO NORTH END BRIDGE

DETAIL PLAN AND PROFILE NO. 6

CONNECTICUT RIVER — MASSACHUSETTS

SCALE: 1 IN. = 40 FT.

U. S. ENGINEER OFFICE, PROVIDENCE, R. I., OCT. 1939

OPERATION AND MAINTENANCE MANUAL

WEST SPRINGFIELD, MASS.

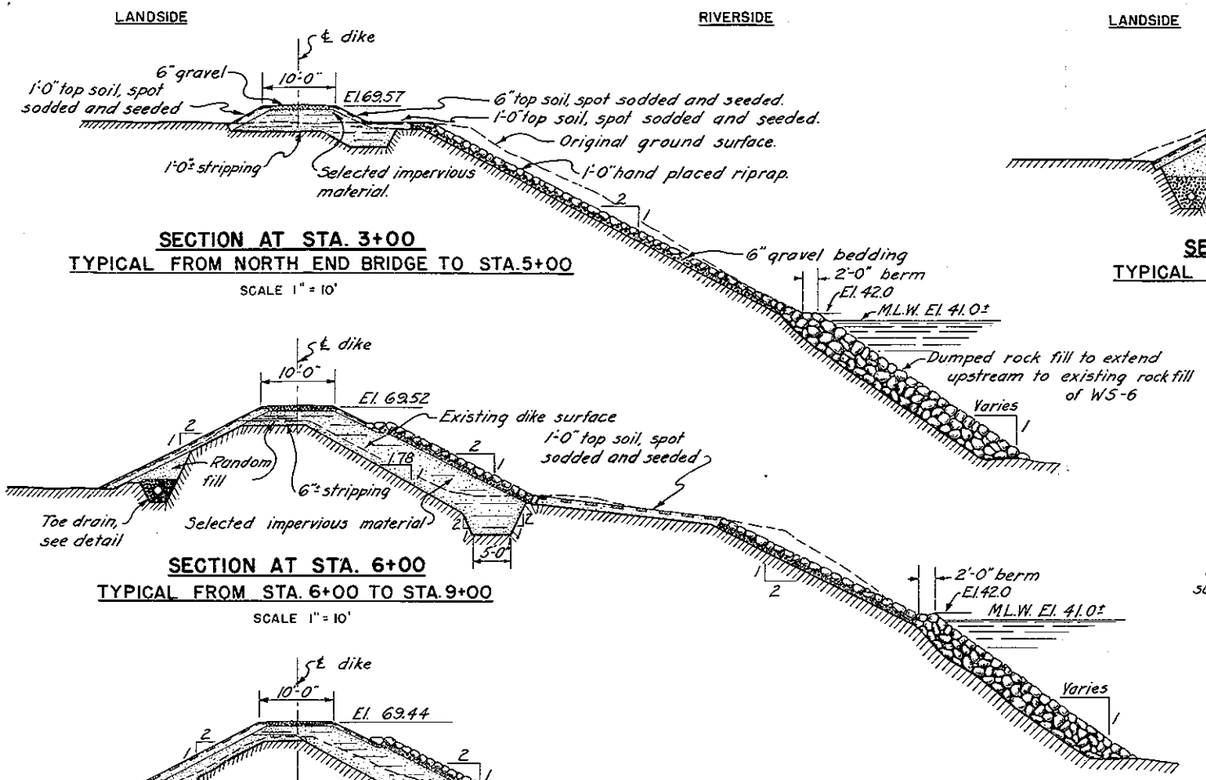

SECTION AT STA. 3+00
TYPICAL FROM NORTH END BRIDGE TO STA. 5+00
SCALE 1" = 10'

SECTION AT STA. 6+00
TYPICAL FROM STA. 6+00 TO STA. 9+00
SCALE 1" = 10'

SECTION AT STA. 17+00
TYPICAL FROM STA. 9+00 TO STA. 17+00
SCALE 1" = 10'

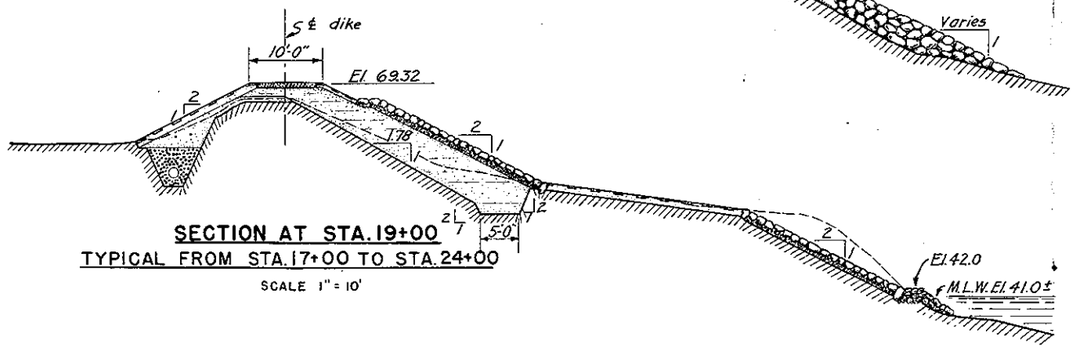

SECTION AT STA. 19+00
TYPICAL FROM STA. 17+00 TO STA. 24+00
SCALE 1" = 10'

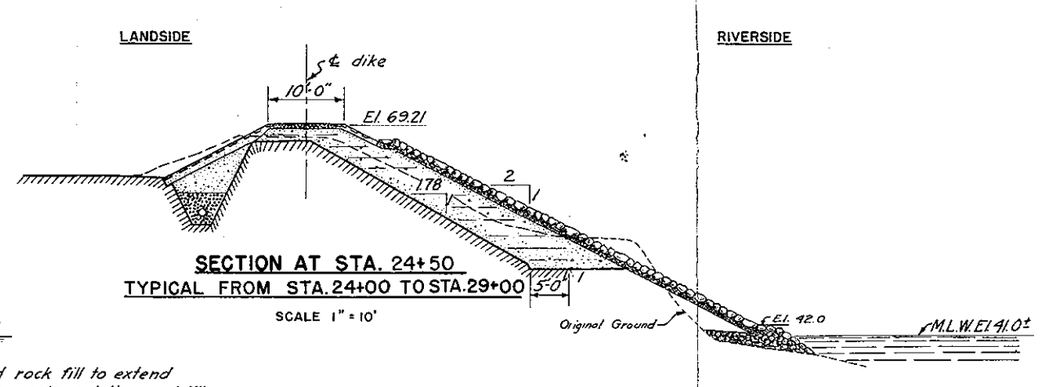

SECTION AT STA. 24+50
TYPICAL FROM STA. 24+00 TO STA. 29+00
SCALE 1" = 10'

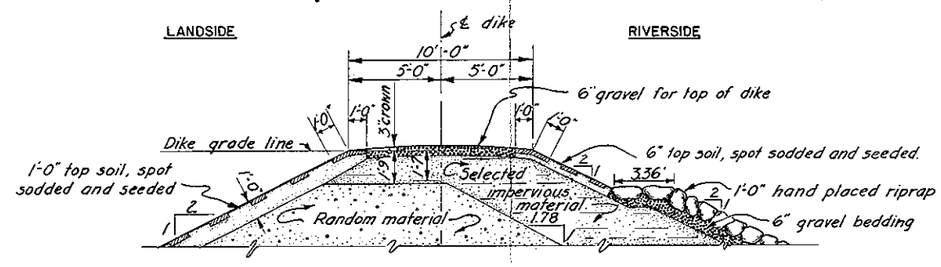

DETAIL OF TOP OF DIKE
SCALE $\frac{1}{4}$" = 1'-0"

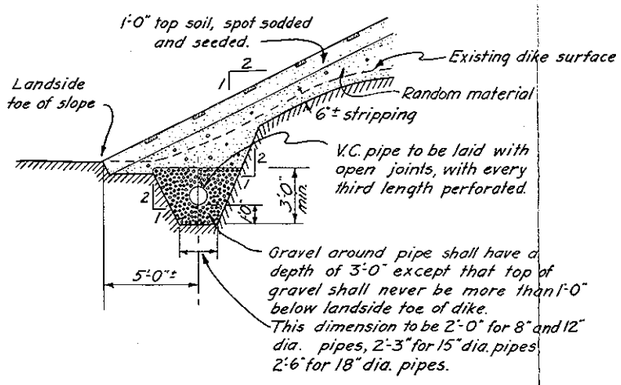

DETAIL OF TOE DRAIN
SCALE $\frac{1}{4}$" = 1'-0"
5' 0' 5' 10'

NOTES

Elevations refer to Mean Sea Level Datum.

CONNECTICUT RIVER FLOOD CONTROL

WEST SPRINGFIELD DIKE

MEMORIAL BRIDGE TO NORTH END BRIDGE

TYPICAL SECTIONS NO. 1

CONNECTICUT RIVER MASSACHUSETTS

SCALE 1 IN. = 10 FT.
10' 0 10' 20'

U. S. ENGINEER OFFICE, PROVIDENCE, R. I., OCT., 1939

OPERATION AND MAINTENANCE MANUAL

WEST SPRINGFIELD, MASS.

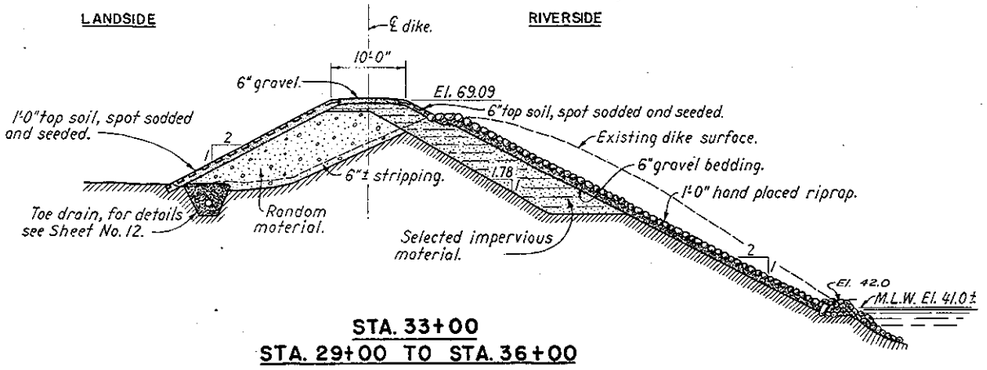

STA. 33+00
STA. 29+00 TO STA. 36+00

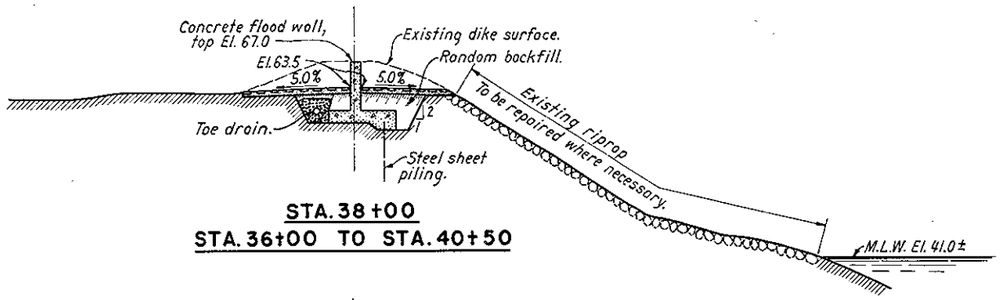

STA. 38+00
STA. 36+00 TO STA. 40+50

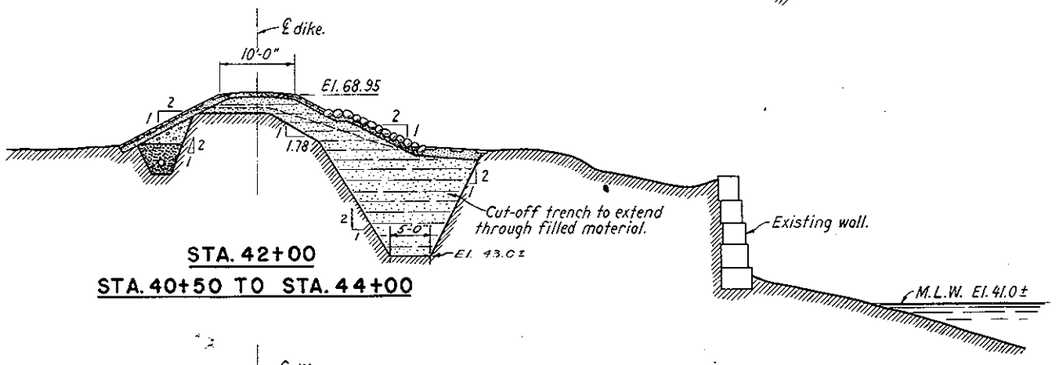

STA. 42+00
STA. 40+50 TO STA. 44+00

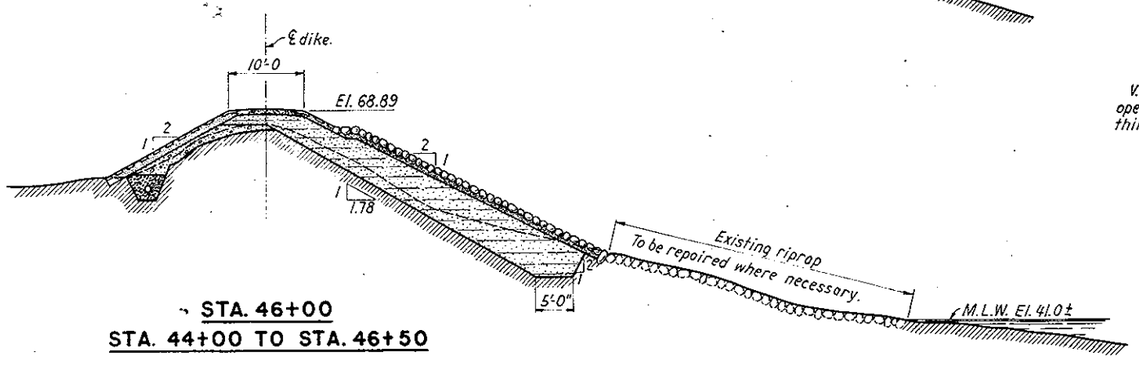

STA. 46+00
STA. 44+00 TO STA. 46+50

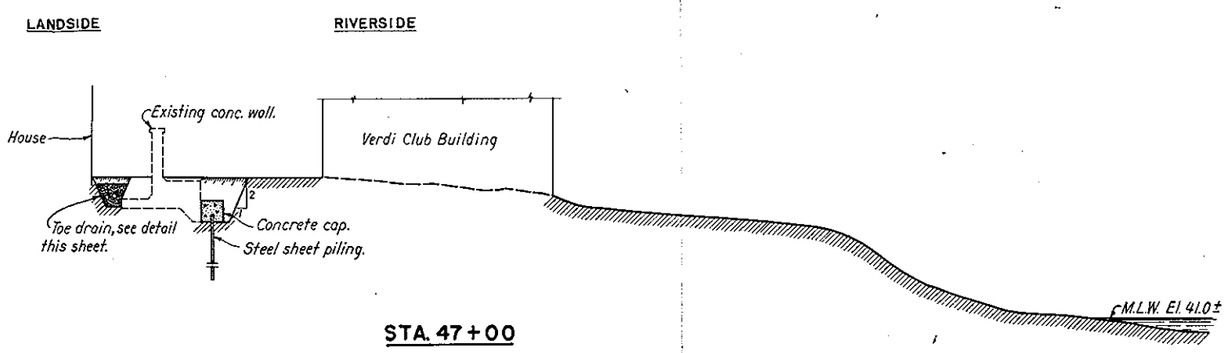

STA. 47+00
STA. 46+50 TO STA. 47+70

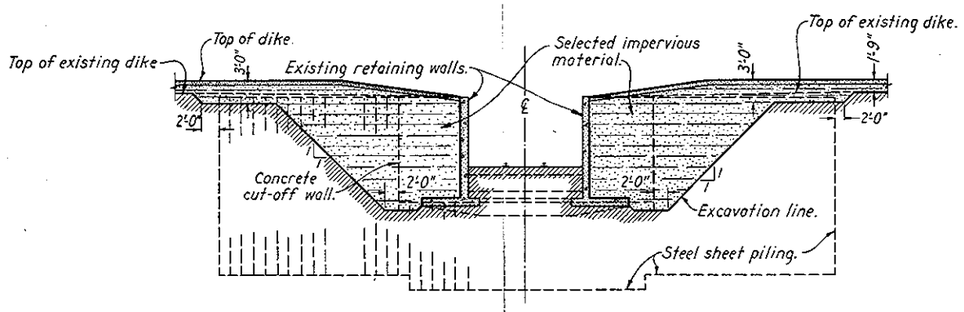

TYPICAL DETAIL OF SPECIAL FILL
AT STOP LOG STRUCTURES

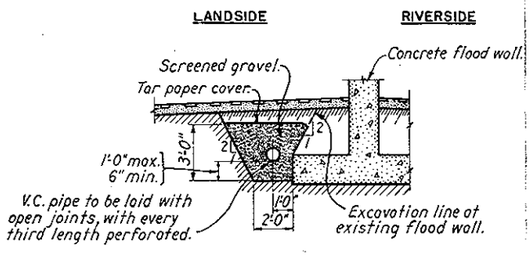

DETAIL OF TOE DRAIN
SCALE: 1/4" = 1'-0"

NOTES

Elevations refer to Mean Sea Level Datum.

CONNECTICUT RIVER FLOOD CONTROL
WEST SPRINGFIELD DIKE
MEMORIAL BRIDGE TO NORTH END BRIDGE
TYPICAL SECTIONS NO. 2
CONNECTICUT RIVER MASSACHUSETTS
SCALE: 1 IN. = 10 FT.
U. S. ENGINEER OFFICE, PROVIDENCE, R. I., OCT. 1939

OPERATION AND MAINTENANCE MANUAL
WEST SPRINGFIELD, MASS.

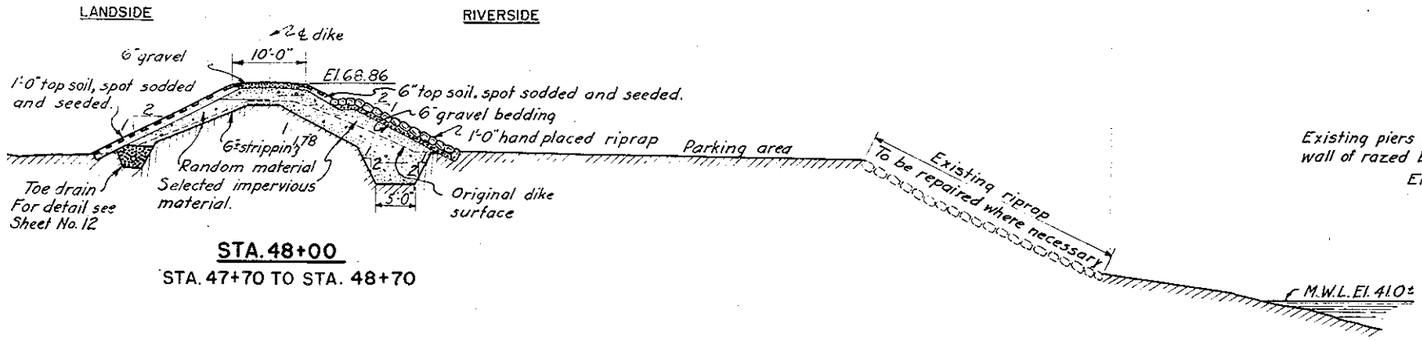

STA. 48+00

STA. 47+70 TO STA. 48+70

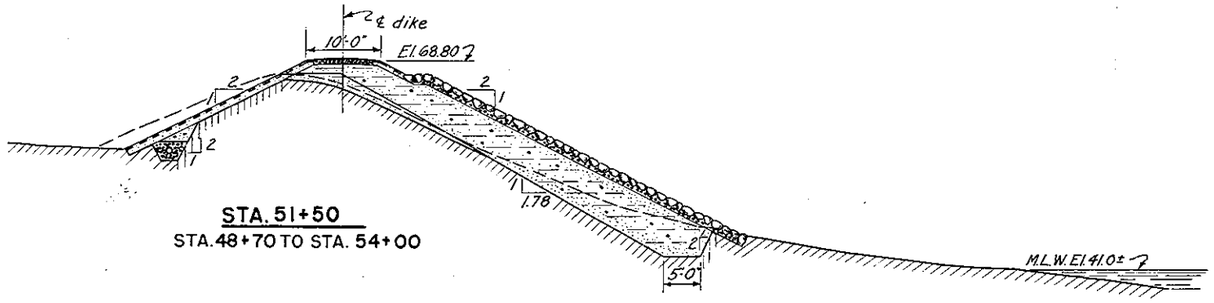

STA. 51+50

STA. 48+70 TO STA. 54+00

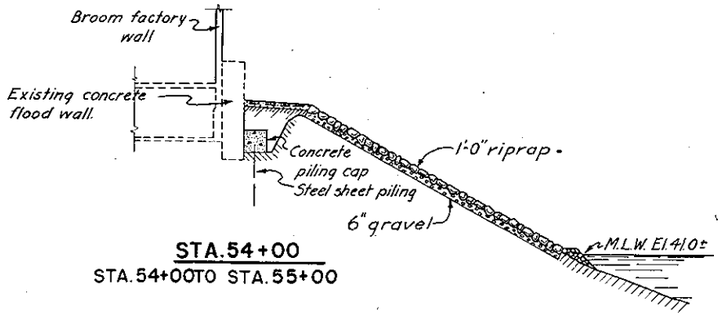

STA. 54+00

STA. 54+00 TO STA. 55+00

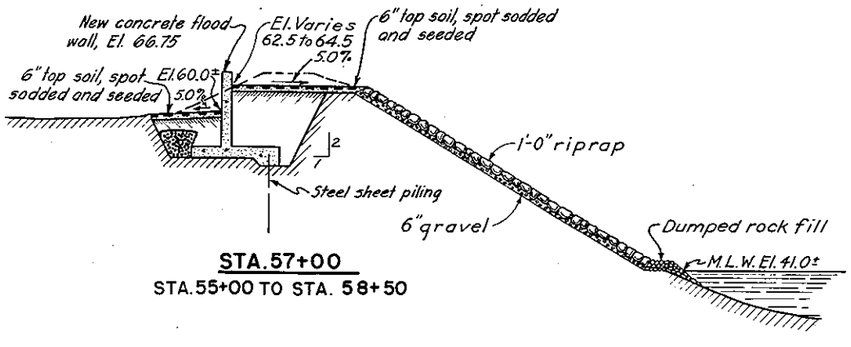

STA. 57+00

STA. 55+00 TO STA. 58+50

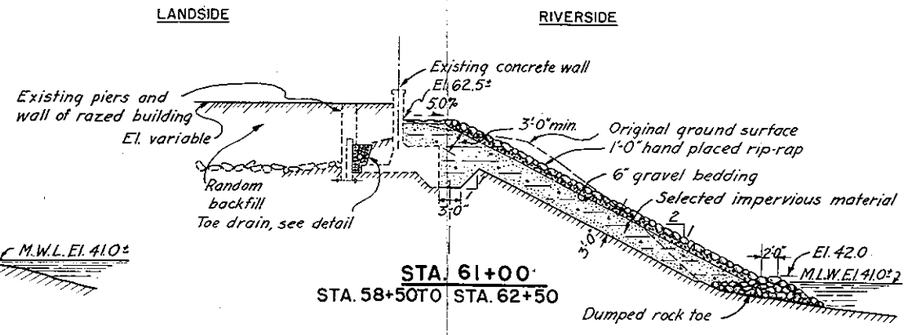

STA. 61+00

STA. 58+50 TO STA. 62+50

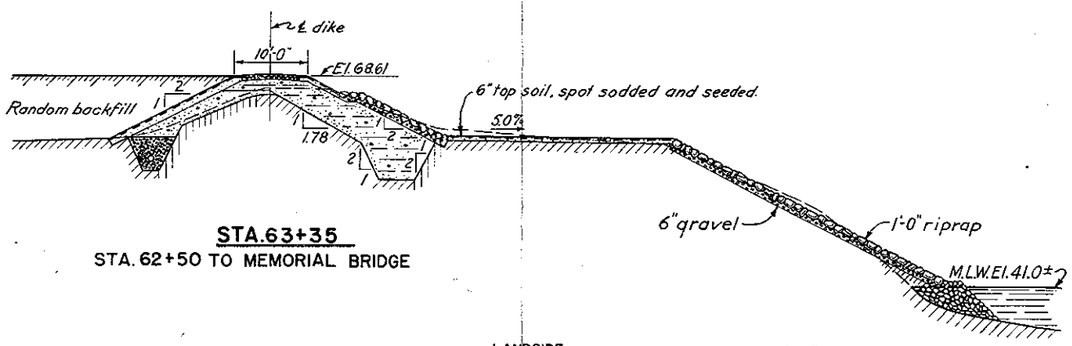

STA. 63+35

STA. 62+50 TO MEMORIAL BRIDGE

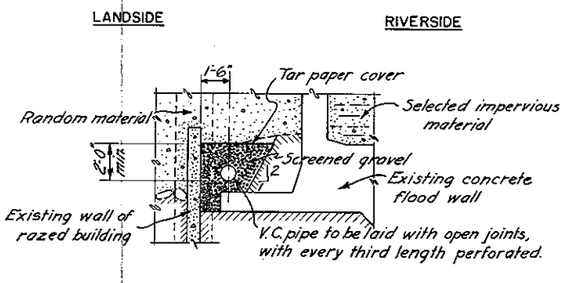

DETAIL OF TOE DRAIN AT RAZED BUILDING

SCALE $\frac{1}{4}$" = 1'-0"

NOTES

Elevations refer to Mean Sea Level Datum

CONNECTICUT RIVER FLOOD CONTROL

WEST SPRINGFIELD DIKE

MEMORIAL BRIDGE TO NORTH END BRIDGE

TYPICAL SECTIONS NO. 3

CONNECTICUT RIVER — MASSACHUSETTS

SCALE 1 IN = 10 FT.

U. S. ENGINEER OFFICE, PROVIDENCE, R. I., OCT. 1939

OPERATION AND MAINTENANCE MANUAL

WEST SPRINGFIELD, MASS.

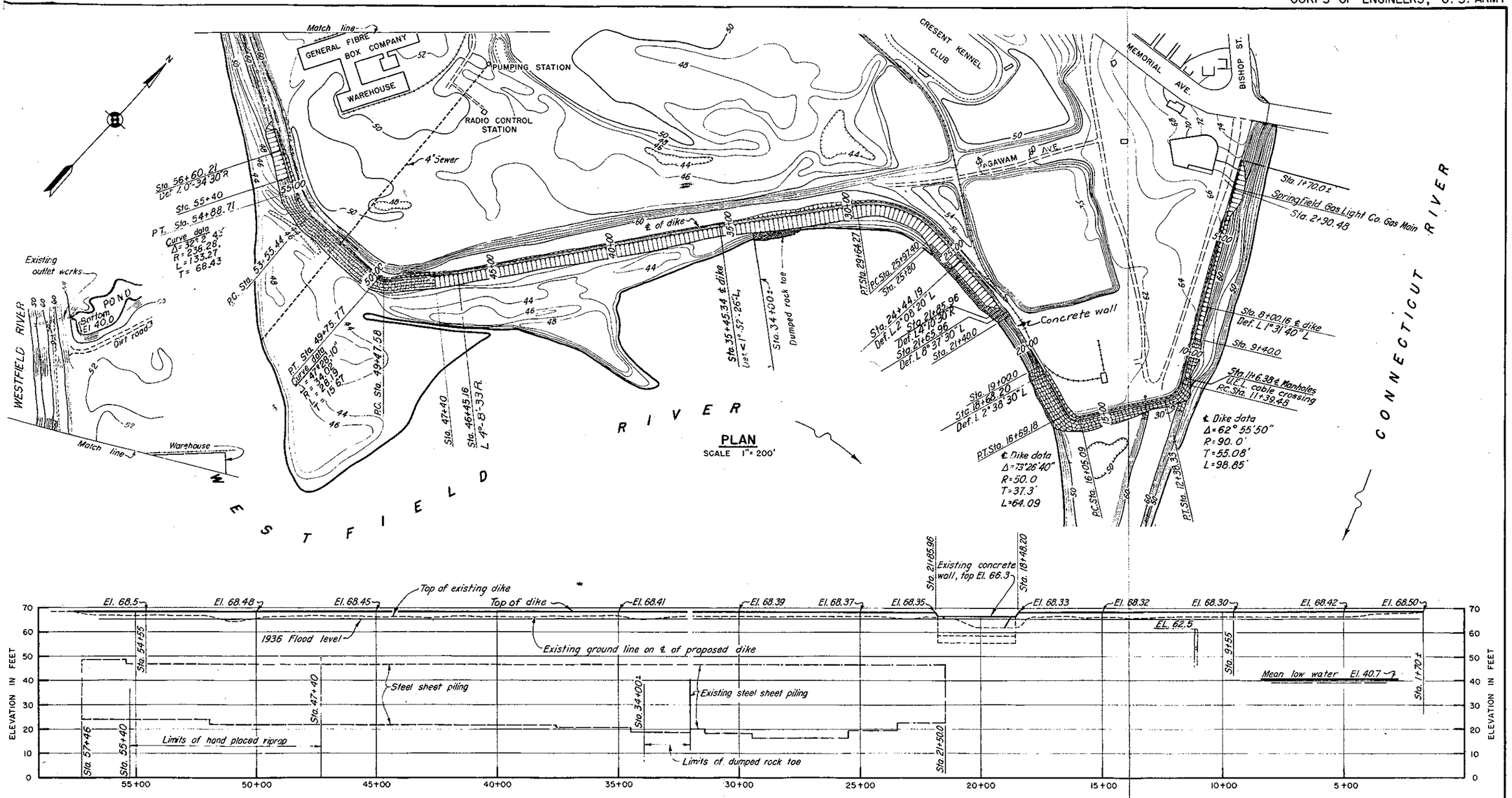

PROFILE

SCALE: HOR. 1" = 200'
VERT. 1" = 20'

NOTE
Elevations refer to Mean Sea Level Datum

CONNECTICUT RIVER FLOOD CONTROL

WEST SPRINGFIELD DIKE

STA. 32+00 TO STA. 57+60±

GENERAL PLAN

WESTFIELD RIVER — MASSACHUSETTS

SCALE 1 IN. = 200 FT.

U. S. ENGINEER OFFICE, PROVIDENCE, R.I., JAN. 1940

OPERATION AND MAINTENANCE MANUAL

WEST SPRINGFIELD, MASS.

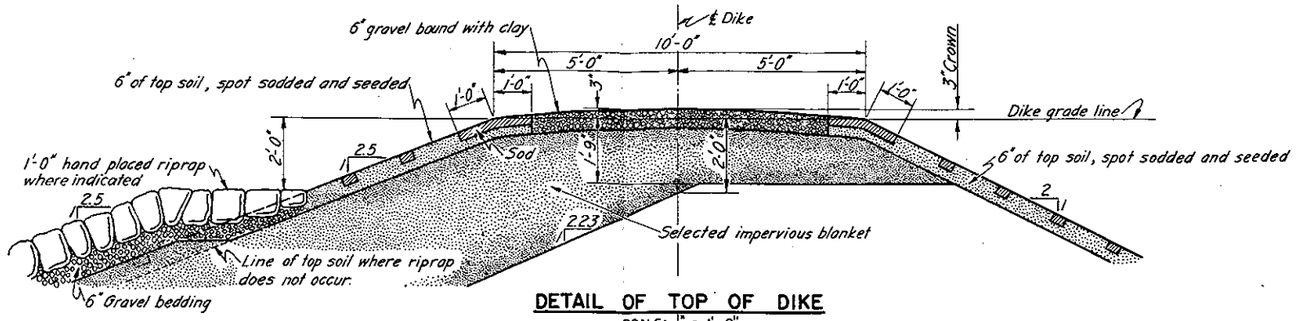

DETAIL OF TOP OF DIKE

SCALE: ½" = 1'-0"

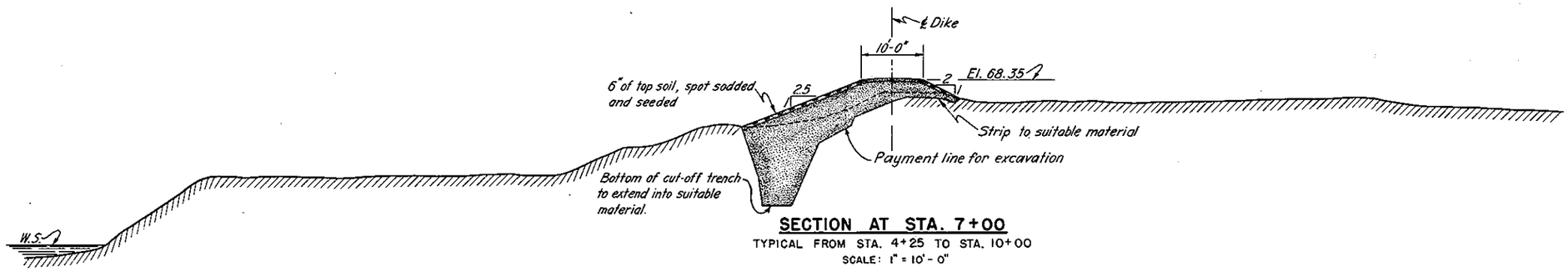

SECTION AT STA. 7+00

TYPICAL FROM STA. 4+25 TO STA. 10+00

SCALE: 1" = 10'-0"

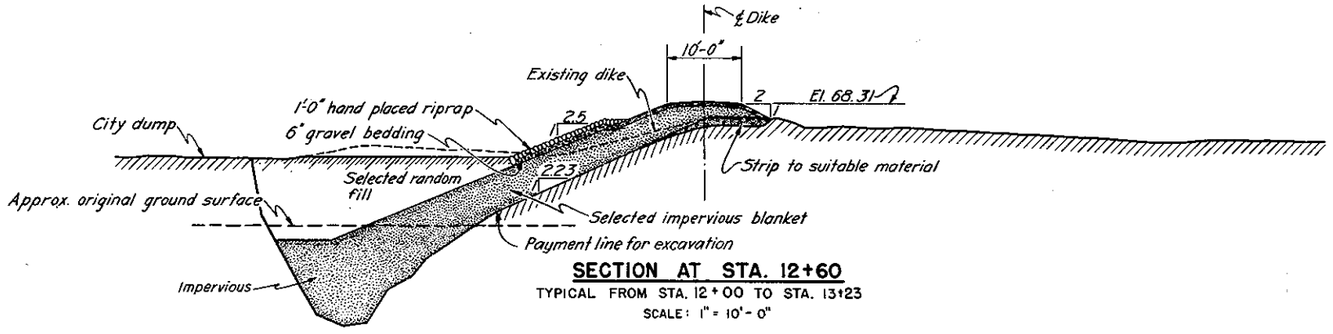

SECTION AT STA. 12+60

TYPICAL FROM STA. 12+00 TO STA. 13+23

SCALE: 1" = 10'-0"

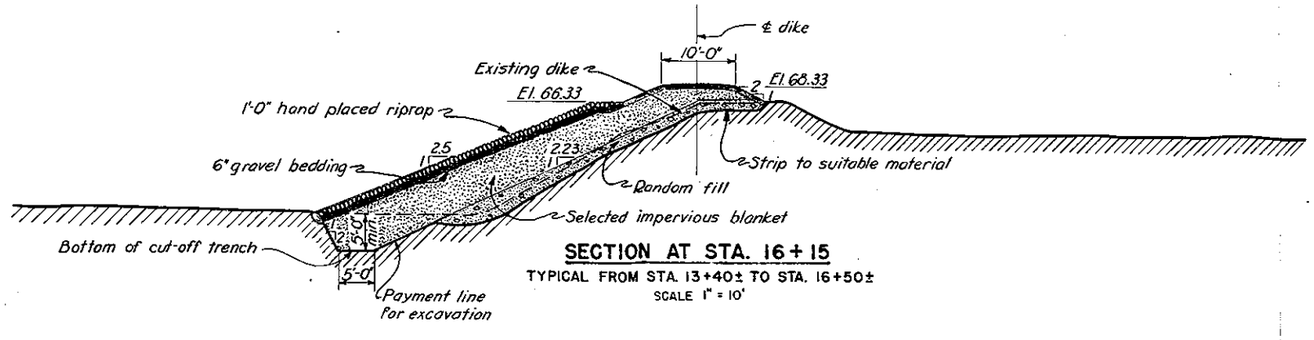

SECTION AT STA. 16+15

TYPICAL FROM STA. 13+40± TO STA. 16+50±

SCALE 1" = 10'

NOTES:

Elevations refer to Mean Sea Level datum.

DATE	REVISION	REV. BY	CK. BY	AP. BY

CONNECTICUT RIVER FLOOD CONTROL

WEST SPRINGFIELD DIKE

FISCAL YEAR 1939 SECTION

TYPICAL SECTIONS NO. 1

CONNECTICUT & WESTFIELD RIVERS MASSACHUSETTS

SCALE: 1 IN. = 10 FT.

U. S. ENGINEER OFFICE, PROVIDENCE, R.I.,

OPERATION AND MAINTENANCE MANUAL

WEST SPRINGFIELD, MASS.

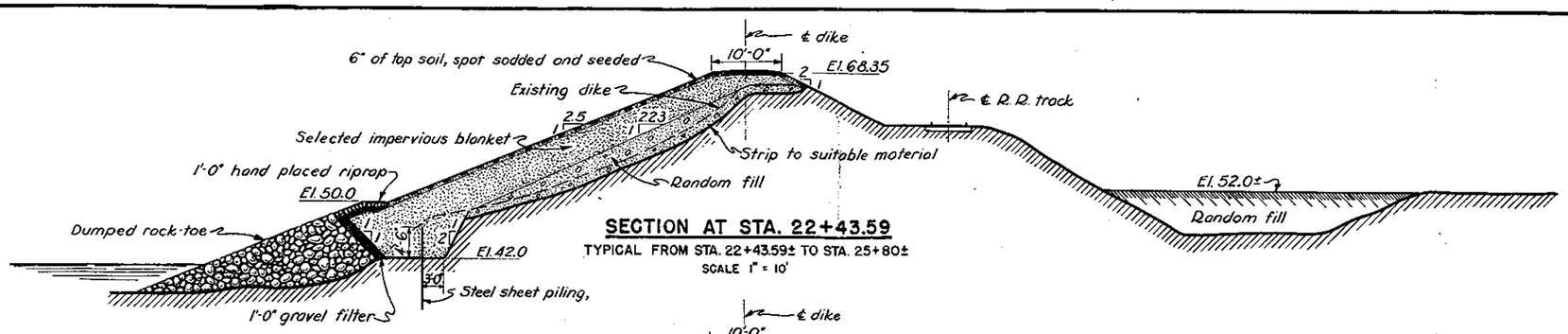

SECTION AT STA. 22+43.59

TYPICAL FROM STA. 22+43.59± TO STA. 25+80±

SCALE 1" = 10'

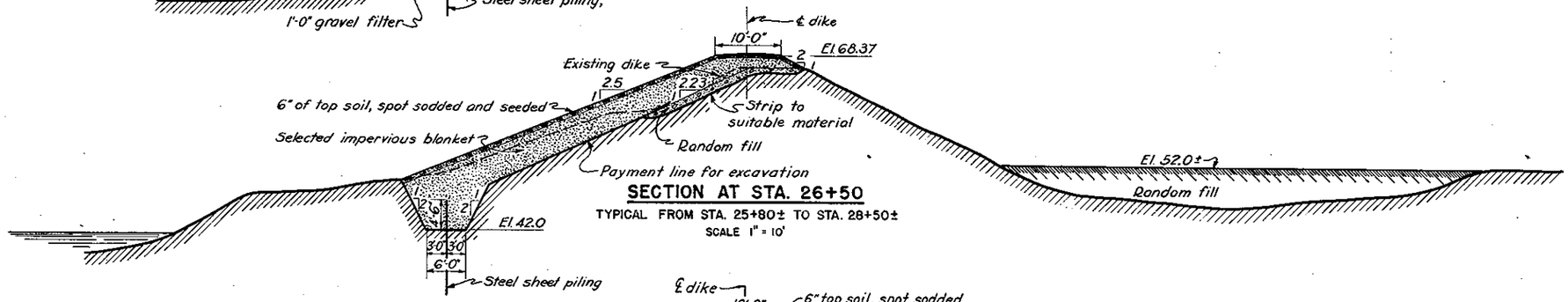

SECTION AT STA. 26+50

TYPICAL FROM STA. 25+80± TO STA. 28+50±

SCALE 1" = 10'

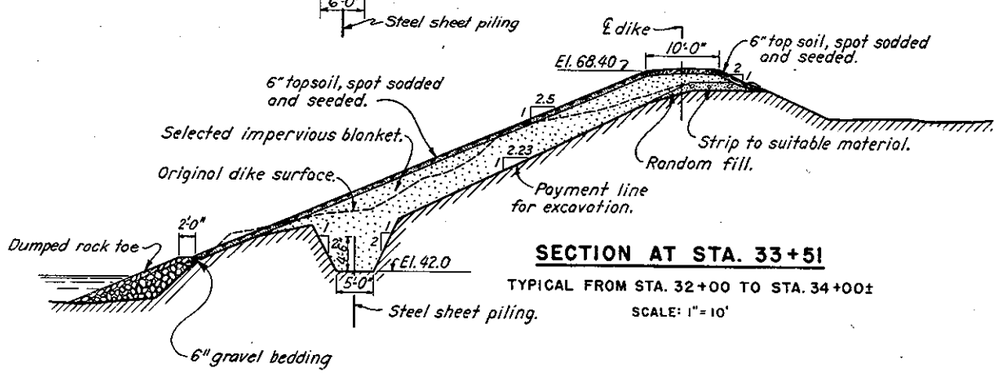

SECTION AT STA. 33+51

TYPICAL FROM STA. 32+00 TO STA. 34+00±

SCALE: 1" = 10'

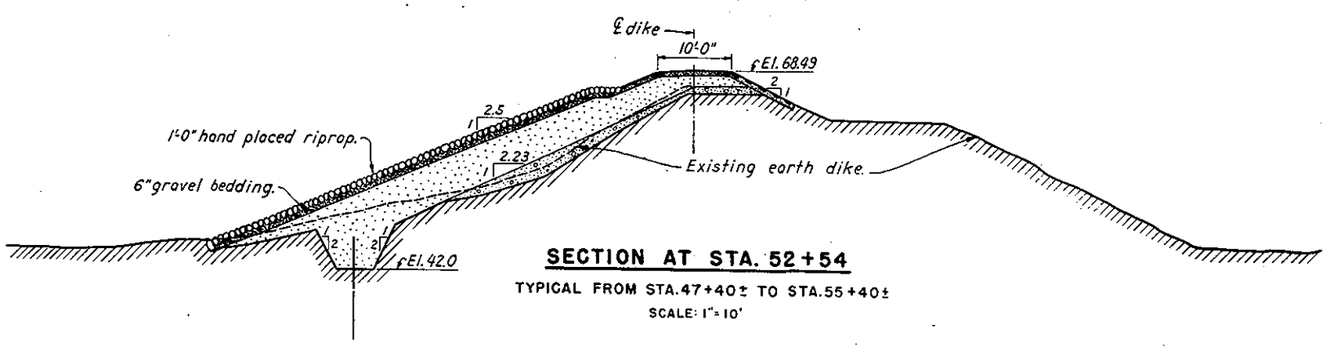

SECTION AT STA. 52+54

TYPICAL FROM STA. 47+40± TO STA. 55+40±

SCALE: 1" = 10'

NOTES:

Elevations refer to Mean Sea Level Datum.

DATE	REVISION	REV. BY	CK. BY	AP. BY

CONNECTICUT RIVER FLOOD CONTROL

WEST SPRINGFIELD DIKE

FISCAL YEAR 1939 SECTION

TYPICAL SECTIONS NO. 2.

CONNECTICUT & WESTFIELD RIVERS MASSACHUSETTS

SCALE 1 IN. = 10 FT.

10' 0 10 20'

U. S. ENGINEER OFFICE, PROVIDENCE, R. I.,

OPERATION AND MAINTENANCE MANUAL

WEST SPRINGFIELD, MASS.

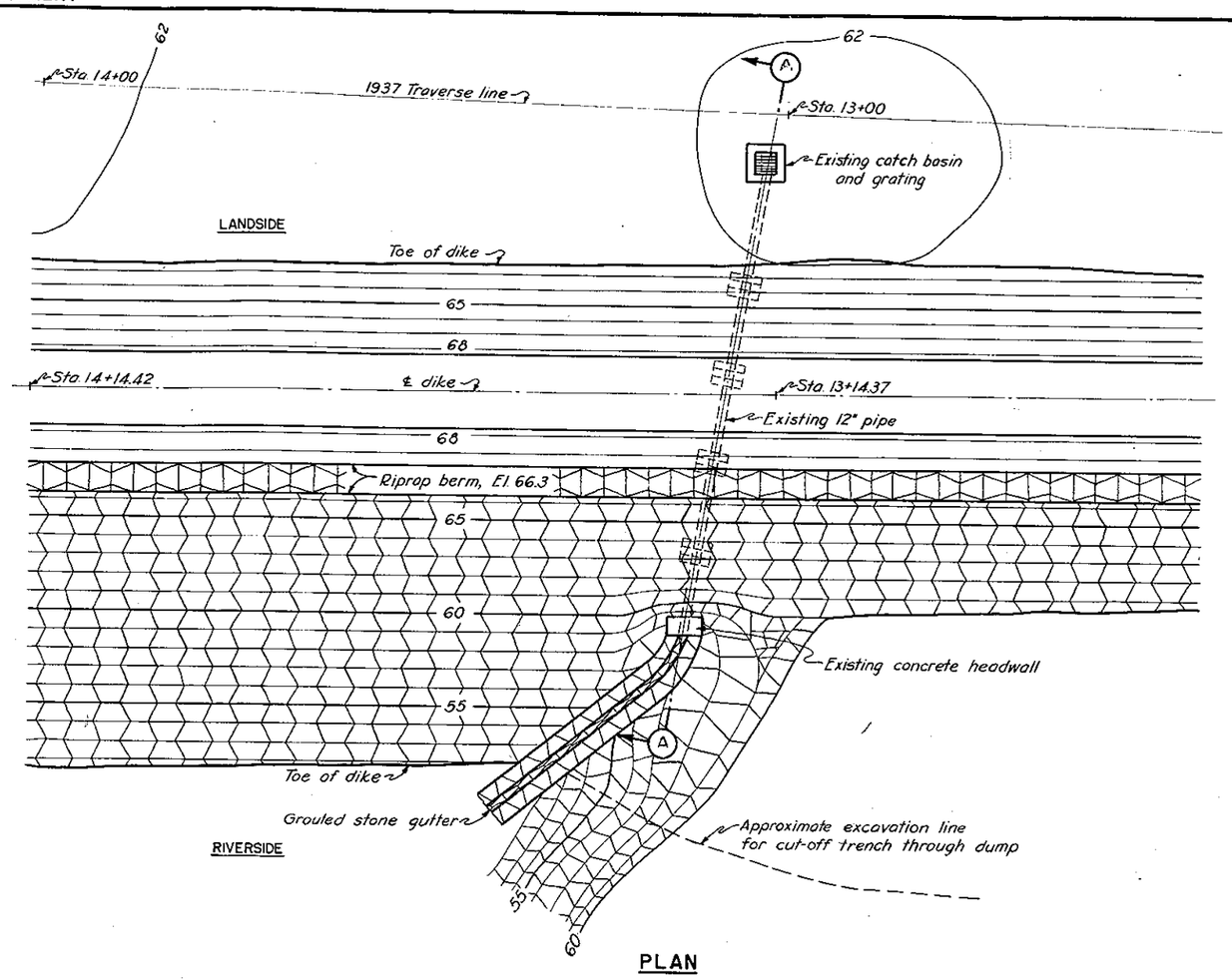

PLAN

SCALE 1" = 10'

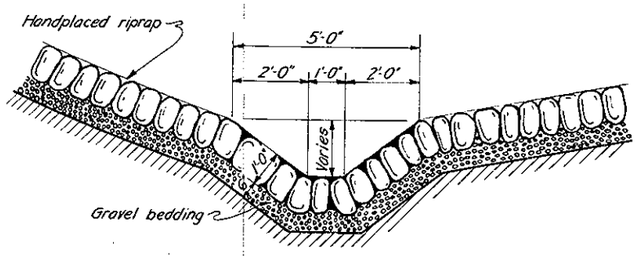

TYPICAL SECTION OF GROUTED STONE GUTTER

SCALE 1" = 2'

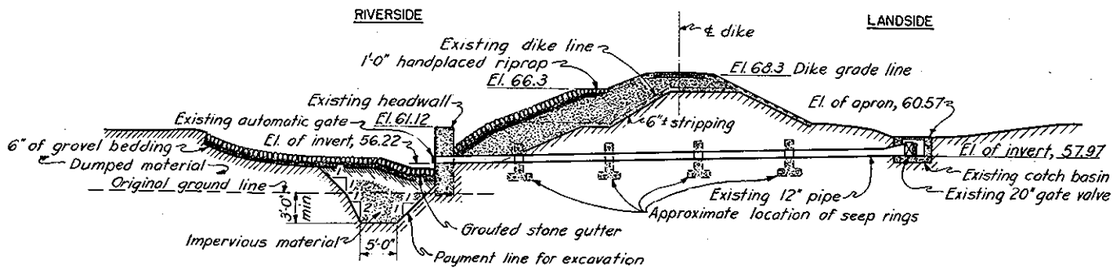

SECTION A

SCALE 1" = 10'

NOTES:

Elevations refer to Mean Sea Level Datum.

CONNECTICUT RIVER FLOOD CONTROL

WEST SPRINGFIELD DIKE

DETAIL PLAN NO. I

CONNECTICUT & WESTFIELD RIVERS MASSACHUSETTS

SCALE 1 IN. = 10 FT.

U. S. ENGINEER OFFICE, PROVIDENCE, R. I., MARCH 1939

OPERATION AND MAINTENANCE MANUAL

WEST SPRINGFIELD, MASS.

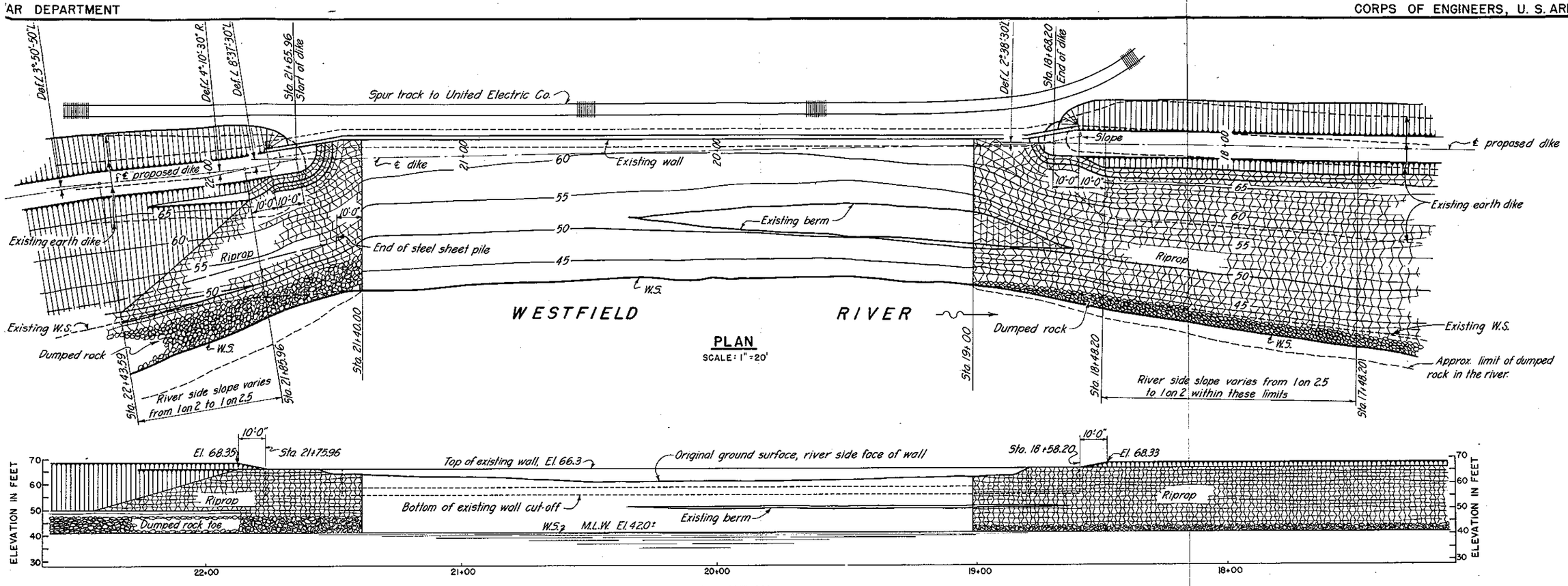

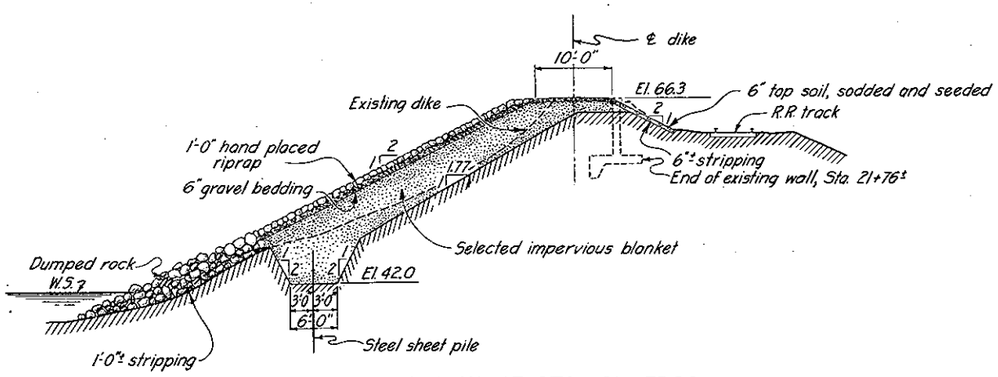

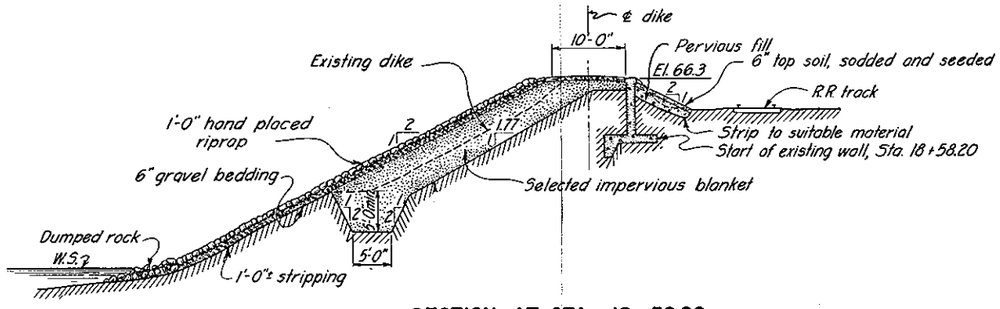

NOTE:
Elevations refer to Mean Sea Level datum.

CONNECTICUT RIVER FLOOD CONTROL
WEST SPRINGFIELD DIKE
DETAIL PLAN NO. 2
CONNECTICUT & WESTFIELD RIVERS, MASSACHUSETTS
SCALE: 1 IN. = 20 FT.
U. S. ENGINEER OFFICE, PROVIDENCE, R.I., MARCH 1939
OPERATION AND MAINTENANCE MANUAL
WEST SPRINGFIELD, MASS.

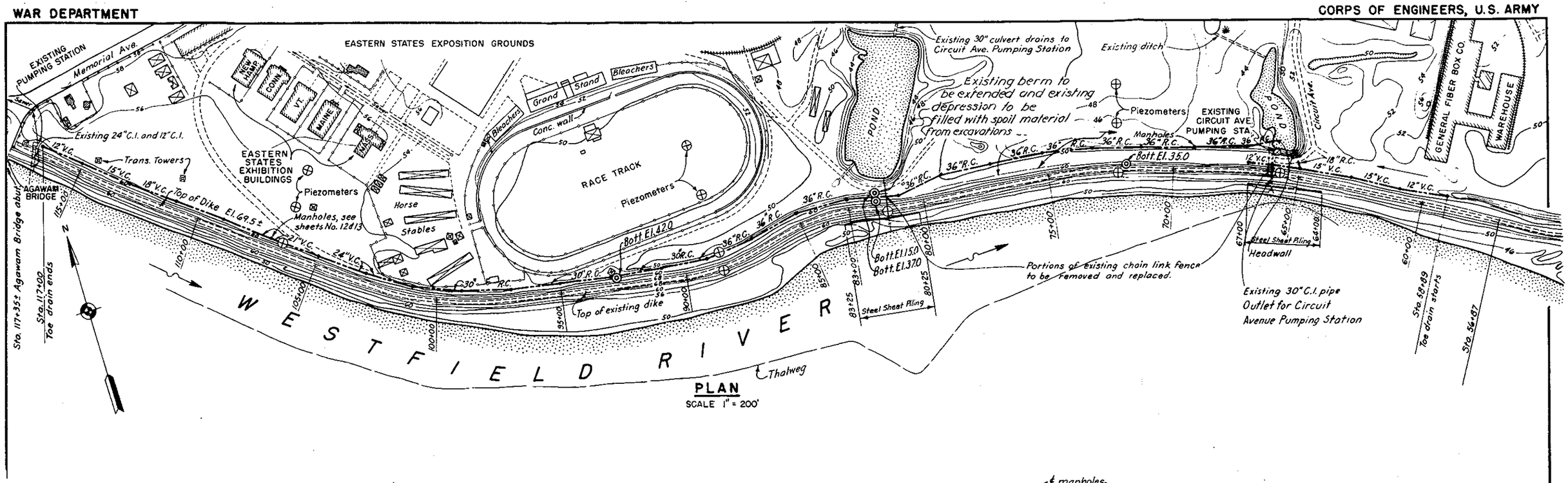

PLAN
SCALE 1" = 200'

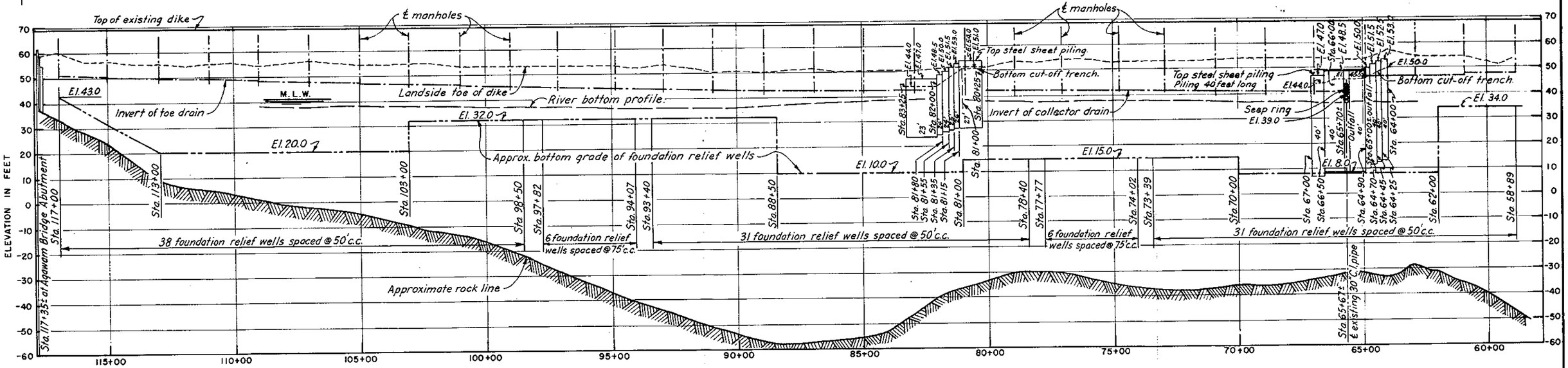

PROFILE
SCALE – HOR. 1" = 200' VER. 1" = 20'

NOTES

Elevations refer to Mean Sea Level Datum.
Stations refer to 1937 Traverse Station.

◎ Existing Piezometers
⊕ Location of new Piezometers
Bottom of Piezometer at Sta. 65+75 El. 30.0±
Bottom of all other Piezometers El. 40.0±
All Piezometers to consist of 1½" galv. W.I. pipe,

CONNECTICUT RIVER FLOOD CONTROL
WEST SPRINGFIELD DIKE
STA. 56 + 87 TO AGAWAM BRIDGE
FOUNDATION TREATMENT
GENERAL PLAN & PROFILE
WESTFIELD RIVER MASSACHUSETTS

OPERATION AND MAINTENANCE MANUAL
PREPARED BY
CORPS OF ENGINEERS, U. S. ARMY.
OFFICE OF THE DIVISION ENGINEER
NEW ENGLAND DIVISION BOSTON, MASS.
DEC. 1950

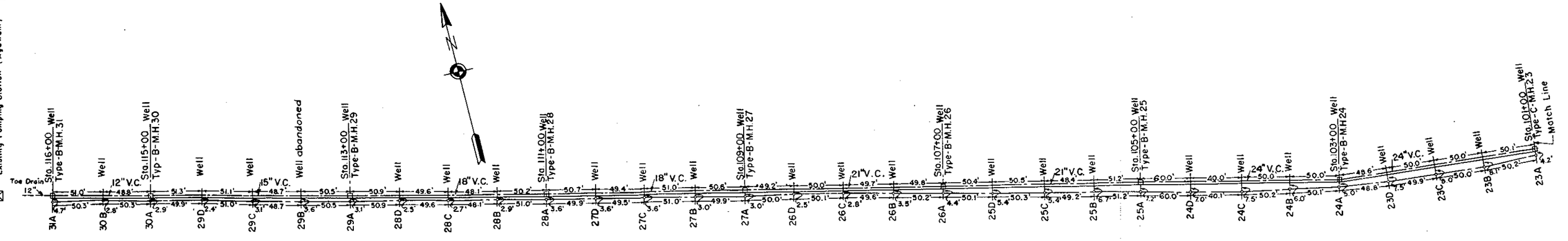

PLAN OF MANHOLES AND WELLS

Scale: 1" = 50'

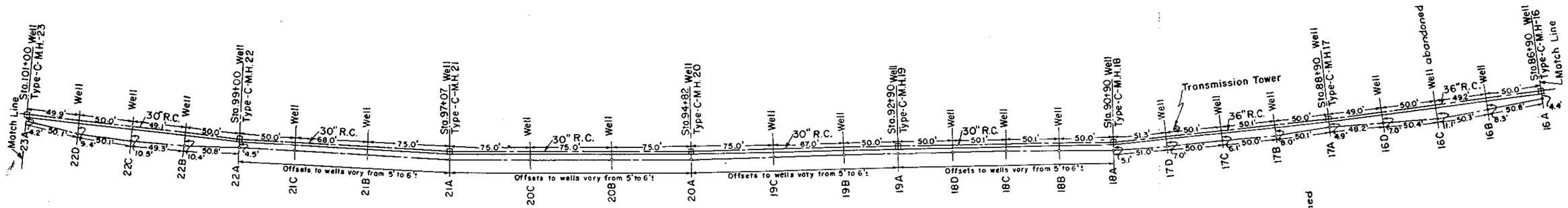

PLAN OF MANHOLES AND WELLS

Scale: 1" = 50'

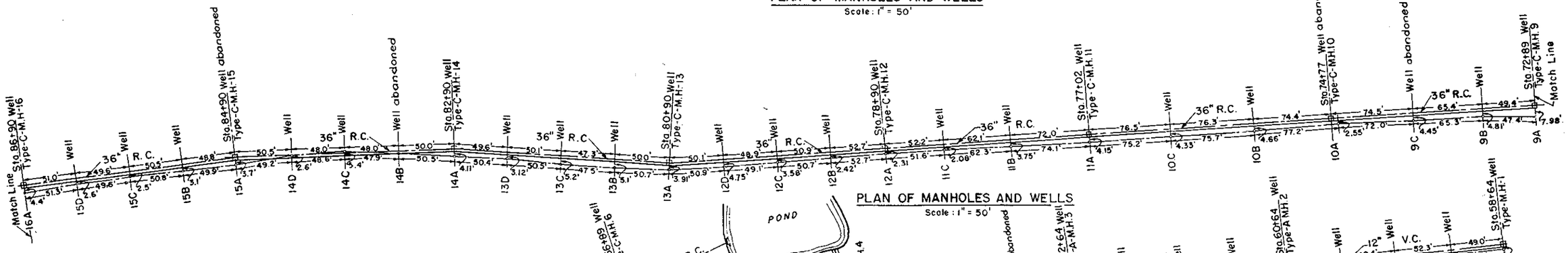

PLAN OF MANHOLES AND WELLS

Scale: 1" = 50'

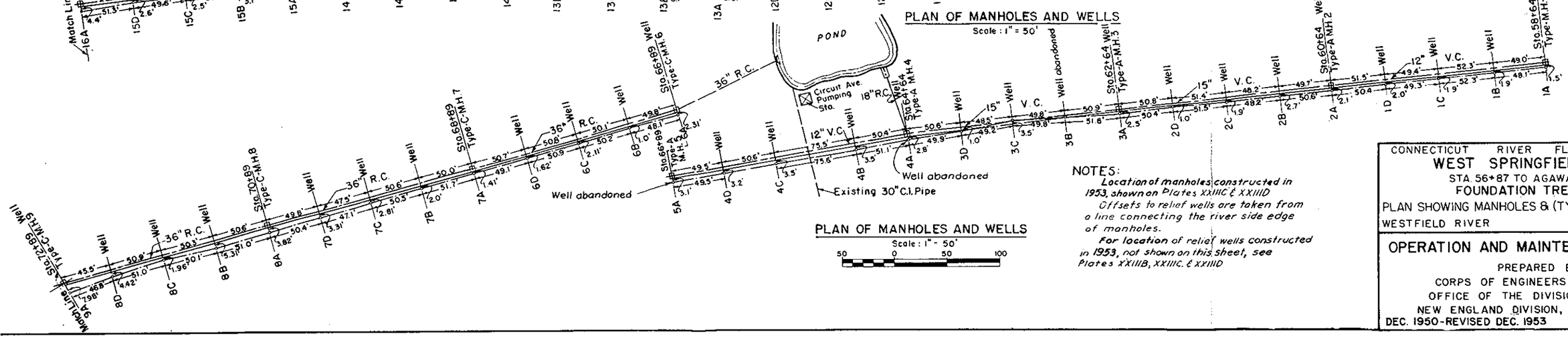

PLAN OF MANHOLES AND WELLS

Scale: 1" = 50'

50 0 50 100

NOTES:

Location of manholes constructed in 1953, shown on Plates XXIIIC & XXIIID

Offsets to relief wells are taken from a line connecting the river side edge of manholes.

For location of relief wells constructed in 1953, not shown on this sheet, see Plates XXIIIB, XXIIIC. & XXIIID

CONNECTICUT RIVER FLOOD CONTROL

WEST SPRINGFIELD DIKE

STA. 56+87 TO AGAWAM BRIDGE

FOUNDATION TREATMENT

PLAN SHOWING MANHOLES & (TYPE A) RELIEF WELLS

WESTFIELD RIVER MASSACHUSETTS

OPERATION AND MAINTENANCE MANUAL

PREPARED BY

CORPS OF ENGINEERS, U.S. ARMY

OFFICE OF THE DIVISION ENGINEER

NEW ENGLAND DIVISION, BOSTON, MASS.

DEC. 1950-REVISED DEC. 1953

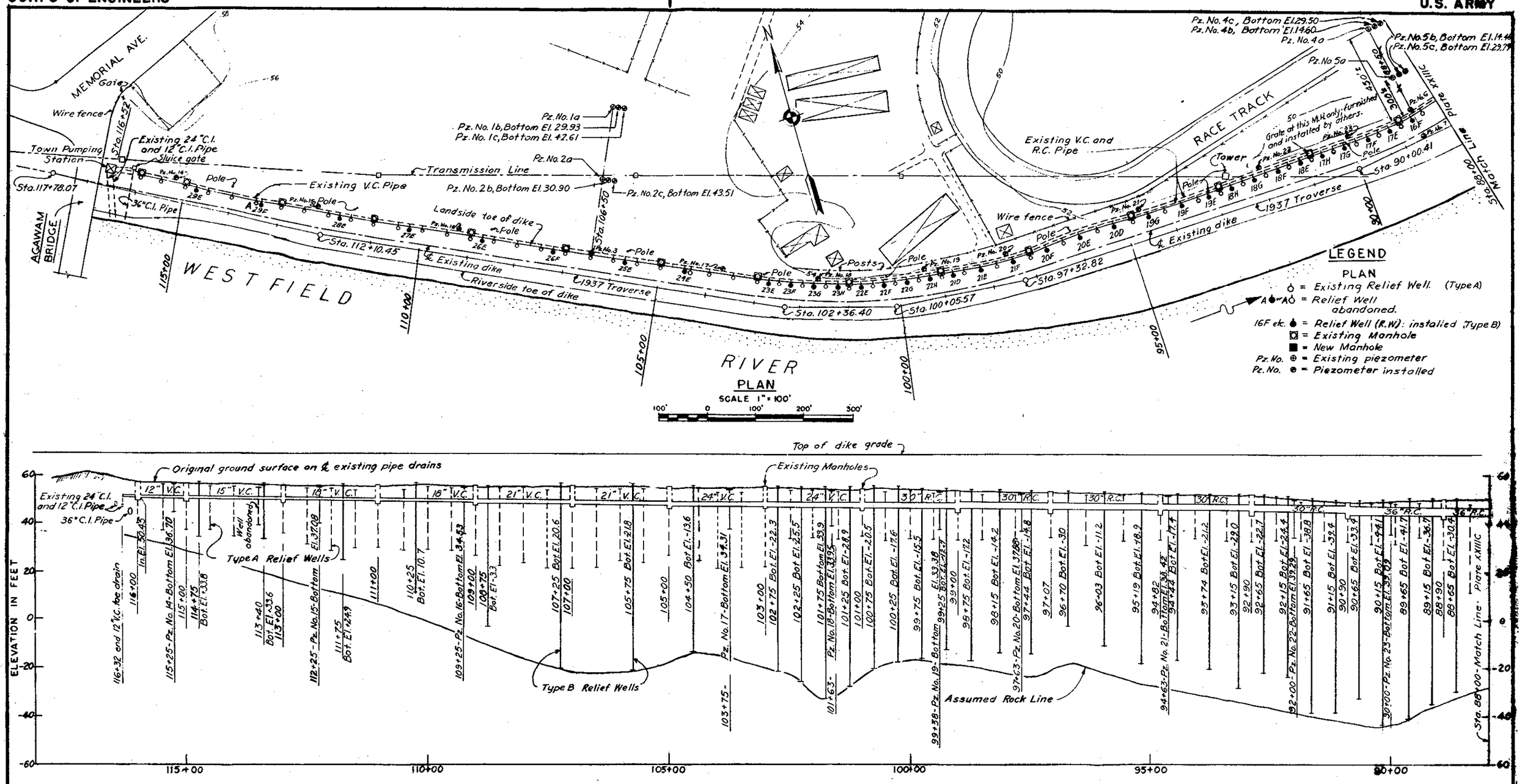

PROFILE

SCALE: HOR. 1" = 100' VERT. 1" = 20'

NOTES

Elevations refer to Mean Sea Level Datum
Contour interval, two feet
For piezometer and relief well details see Plate XXVIB
All existing pipes were thoroughly inspected at each manhole and at each existing and new lateral connection from relief wells. When necessary, pipes were removed and replaced.
Where necessary, open joints on the inside of the existing 30- and 36-inch R.C. collector drain were thoroughly cleaned and repacked with gunned mortar consisting of a proper mixture of portland cement, sand and a non injurious admixture designed to accelerate hardening and reduce volume change.
For elevation of top of piezometer pipes see Plate XXVIB

THIS PLATE AND PLATE XXIIIC SUPERSEDES PLATE XXIII

CONNECTICUT RIVER FLOOD CONTROL
WEST SPRINGFIELD DIKE
STA. 56+87 TO AGAWAM BRIDGE
FOUNDATION TREATMENT
PLAN AND PROFILE NO. 1
WESTFIELD RIVER MASSACHUSETTS

OPERATION AND MAINTENANCE MANUAL

PREPARED BY
CORPS OF ENGINEERS, U.S. ARMY
OFFICE OF THE DIVISION ENGINEER
NEW ENGLAND DIVISION, BOSTON, MASS.
DEC. 1953

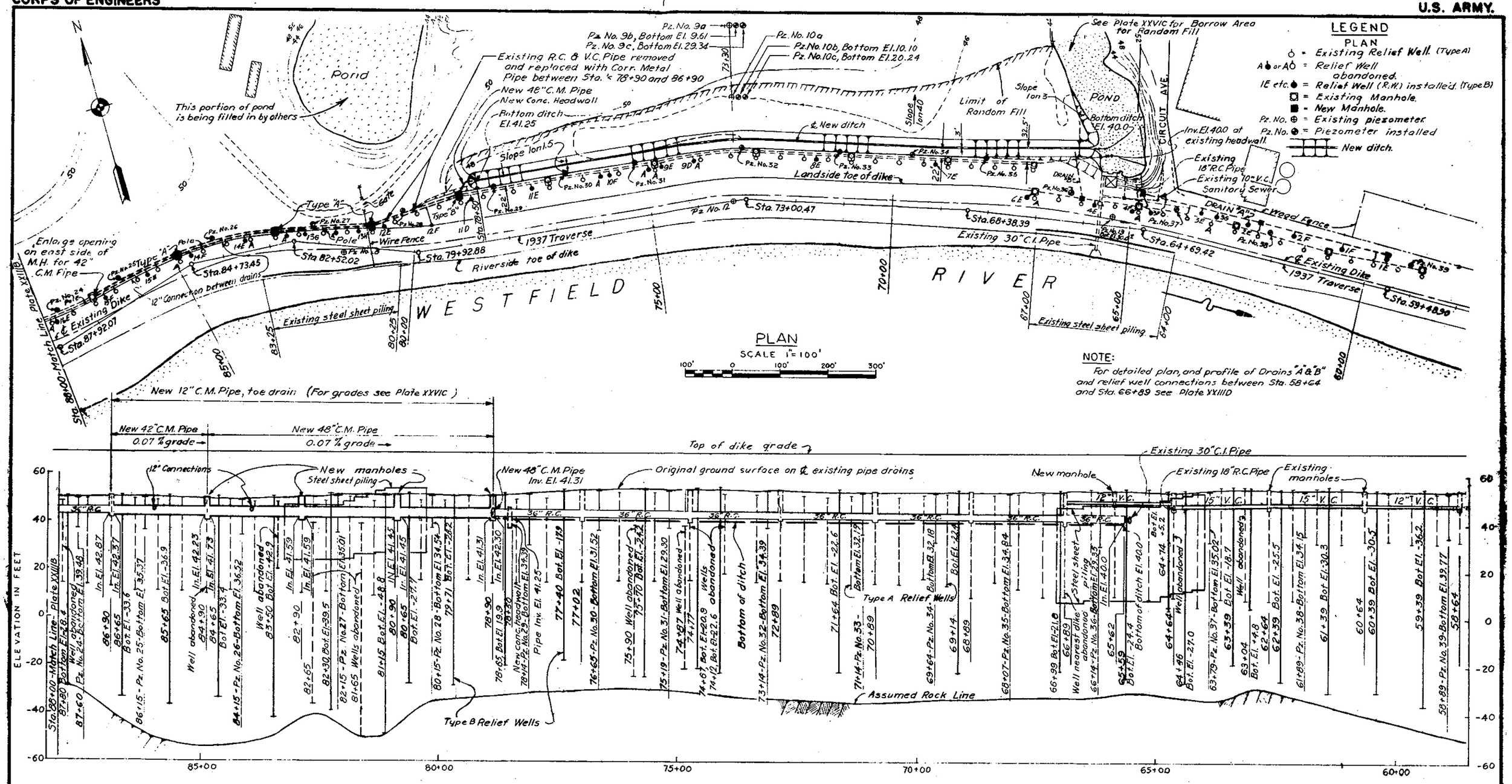

NOTES

For general notes applying to details on this sheet, see Plate XXIIIB

For new ditch details see Plates XXVIA & XXVIC

CONNECTICUT RIVER FLOOD CONTROL

WEST SPRINGFIELD DIKE

STA. 56+87 TO AGAWAM BRIDGE

FOUNDATION TREATMENT

PLAN AND PROFILE NO. 2

WESTFIELD RIVER MASSACHUSETTS

OPERATION AND MAINTENANCE MANUAL

PREPARED BY

CORPS OF ENGINEERS, U.S. ARMY

OFFICE OF THE DIVISION ENGINEER

NEW ENGLAND DIVISION, BOSTON, MASS.

DEC. 1953

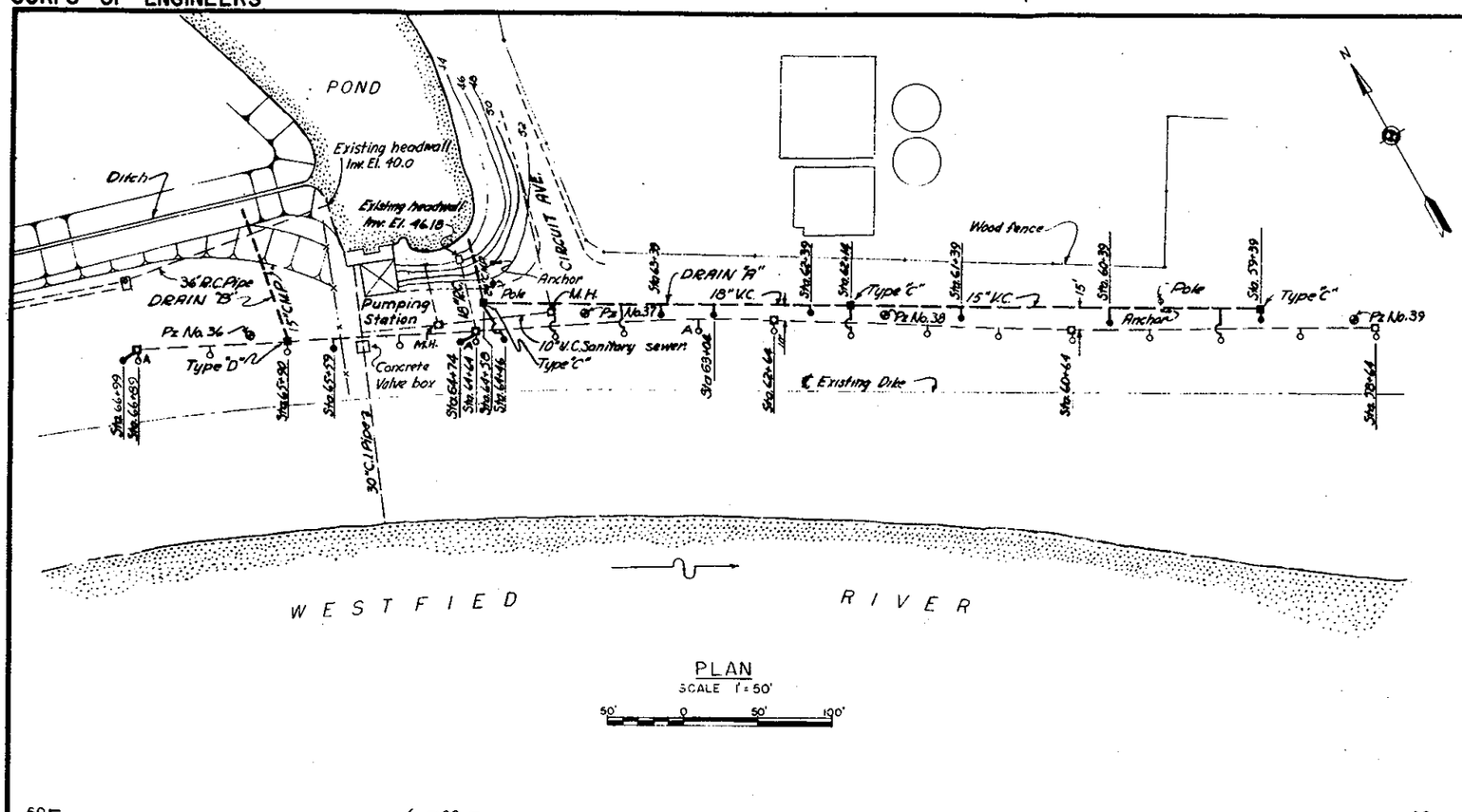

PLAN
SCALE 1" = 50'

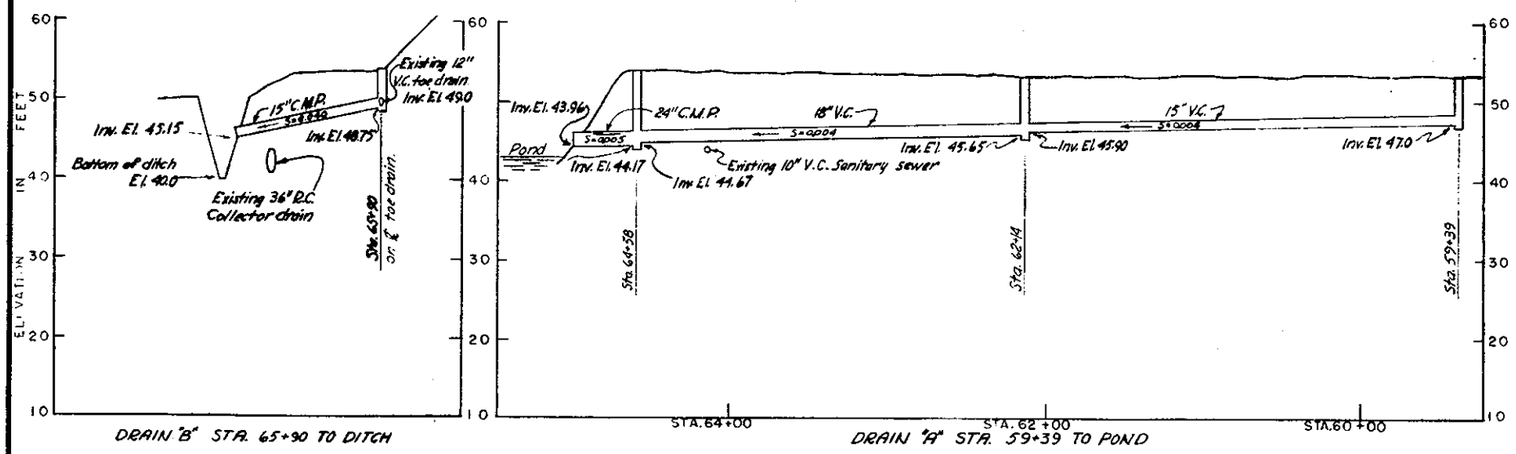

PROFILE
SCALE HOR. 1" = 50'
VERT. 1" = 10'

NOTES

For general notes applying to details on this sheet, see Plate XXIIIB

For relief well connection details, see Plate XXVIA

LEGEND
PLAN

- Existing Relief Well (Type A)
- Existing Relief Well abandoned.
- Relief Well installed. (Type B)
- Existing Manhole.
- New Manhole.
- Existing Piezometer.
- Piezometer installed.
- New drain.
- Existing drain.
- New ditch.

CONNECTICUT RIVER FLOOD CONTROL
WEST SPRINGFIELD DIKE
STA. 56+87 TO AGAWAM BRIDGE
FOUNDATION TREATMENT
PLAN AND PROFILE DRAINS "A" & "B"
WESTFIELD RIVER MASSACHUSETTS

OPERATION AND MAINTENANCE MANUAL
PREPARED BY
CORPS OF ENGINEERS, U. S. ARMY
OFFICE OF THE DIVISION ENGINEER
NEW ENGLAND DIVISION, BOSTON, MASS.
DEC. 1953

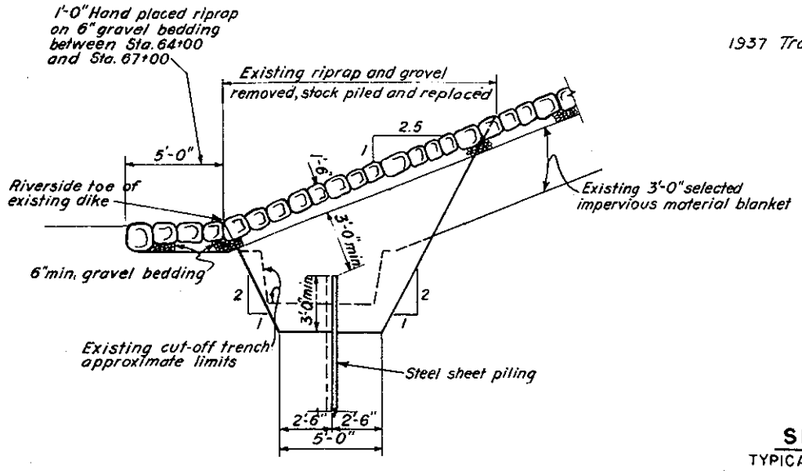

CUT-OFF TRENCH DETAILS

TYPICAL FROM STA. 64+00 TO 67+00

SCALE: 1" = 5'

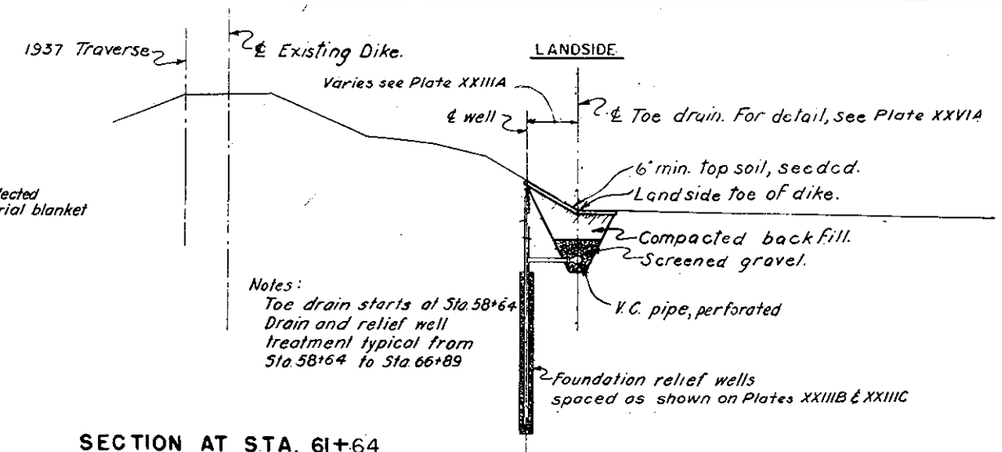

SECTION AT STA. 61+64

TYPICAL FROM STA. 57+50± TO STA. 63+00

SCALE: 1" = 10'

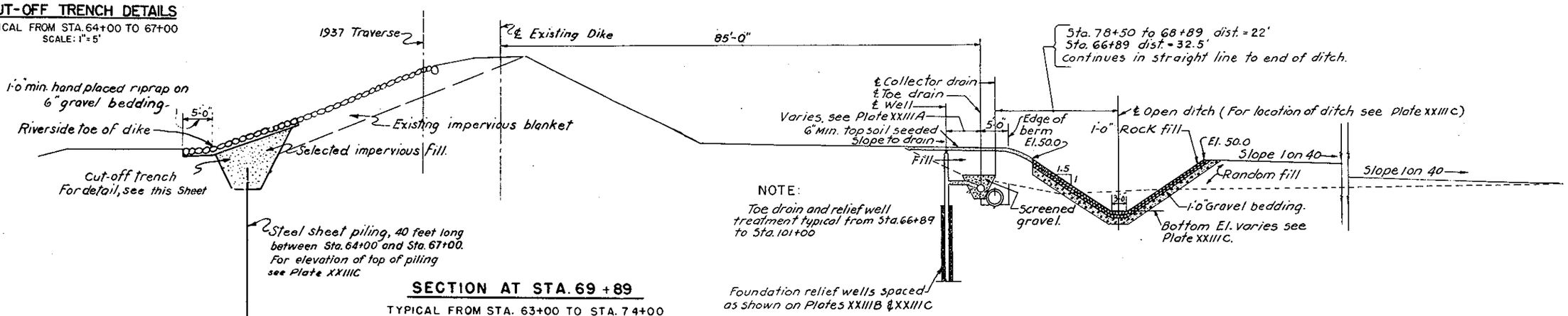

SECTION AT STA. 69+89

TYPICAL FROM STA. 63+00 TO STA. 74+00

SCALE: 1" = 10'

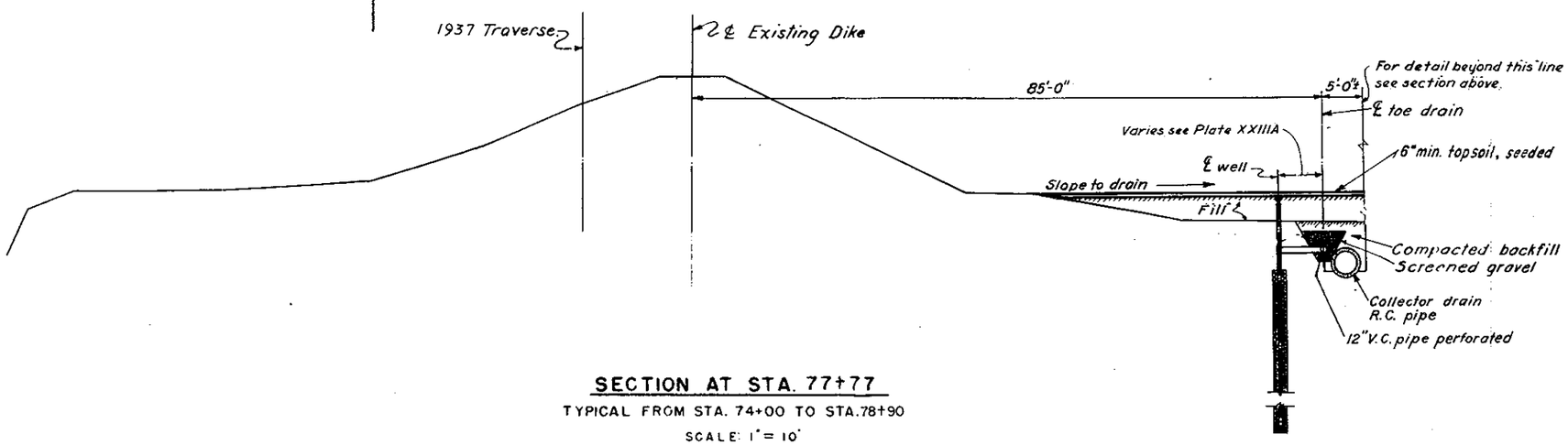

SECTION AT STA. 77+77

TYPICAL FROM STA. 74+00 TO STA. 78+90

SCALE: 1" = 10'

10' 0 10' 20'

NOTES

For details of trenches see Plate XXVIA.
For additional details of foundation relief wells, see Plate XXVIB

CONNECTICUT RIVER FLOOD CONTROL

WEST SPRINGFIELD DIKE

STA. 56+87 TO AGAWAM BRIDGE

FOUNDATION TREATMENT

TYPICAL CROSS SECTIONS NO. I

WESTFIELD RIVER MASSACHUSETTS

OPERATION AND MAINTENANCE MANUAL

PREPARED BY
CORPS OF ENGINEERS, U.S. ARMY
OFFICE OF THE DIVISION ENGINEER
NEW ENGLAND DIVISION, BOSTON, MASS.
DEC. 1950 - REVISED DEC. 1953

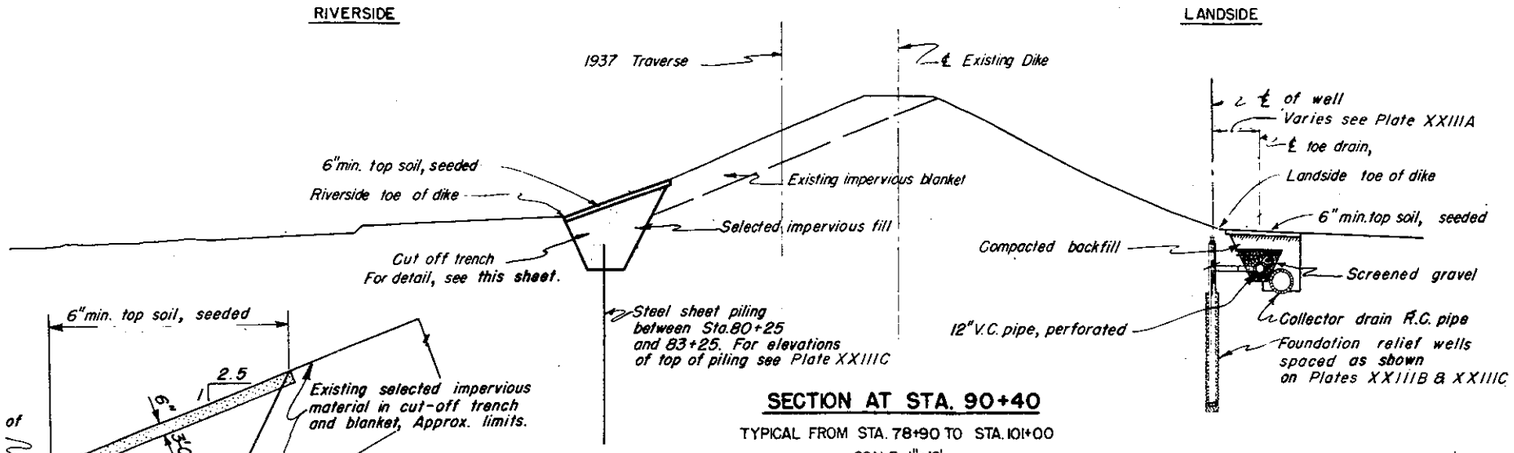

SECTION AT STA. 90+40

TYPICAL FROM STA. 78+90 TO STA. 101+00
SCALE 1"=10'

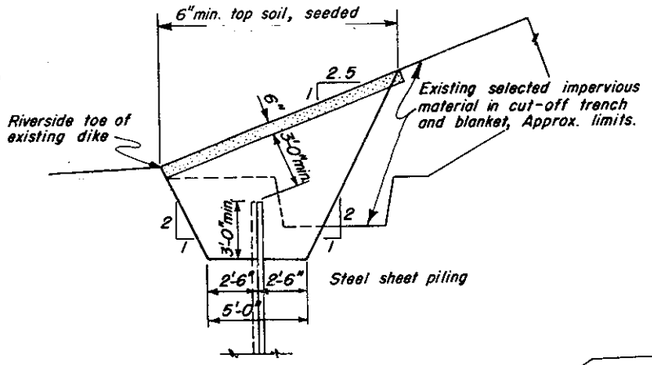

CUT-OFF TRENCH DETAILS

TYPICAL FROM STA. 80+25 TO STA. 83+25
SCALE 1"=5'

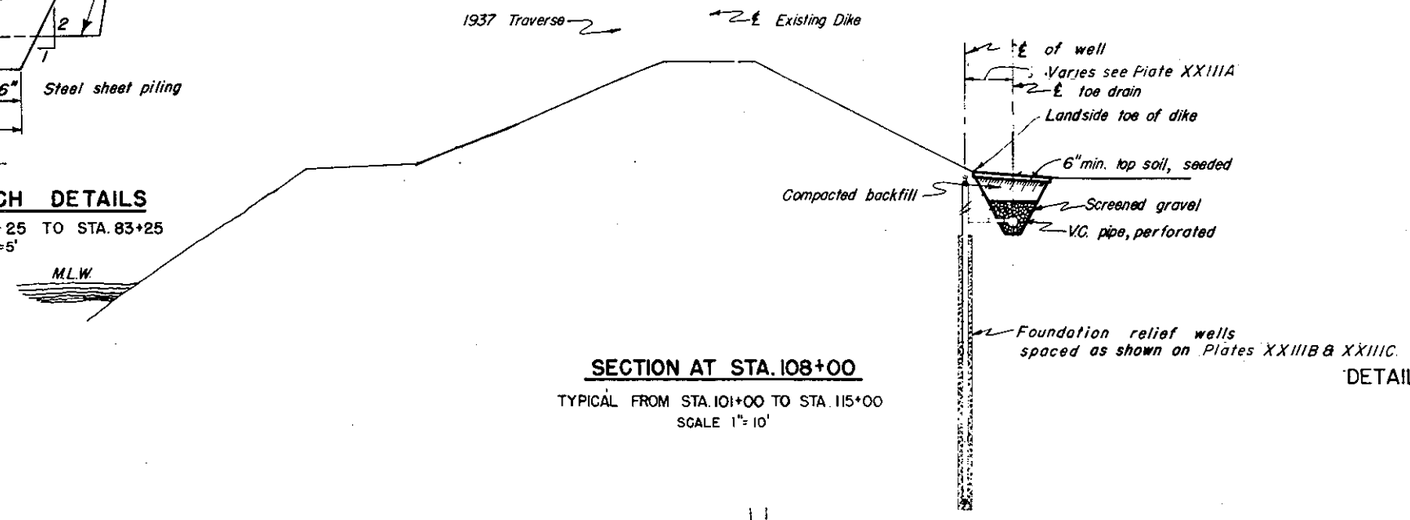

SECTION AT STA. 108+00

TYPICAL FROM STA. 101+00 TO STA. 115+00
SCALE 1"=10'

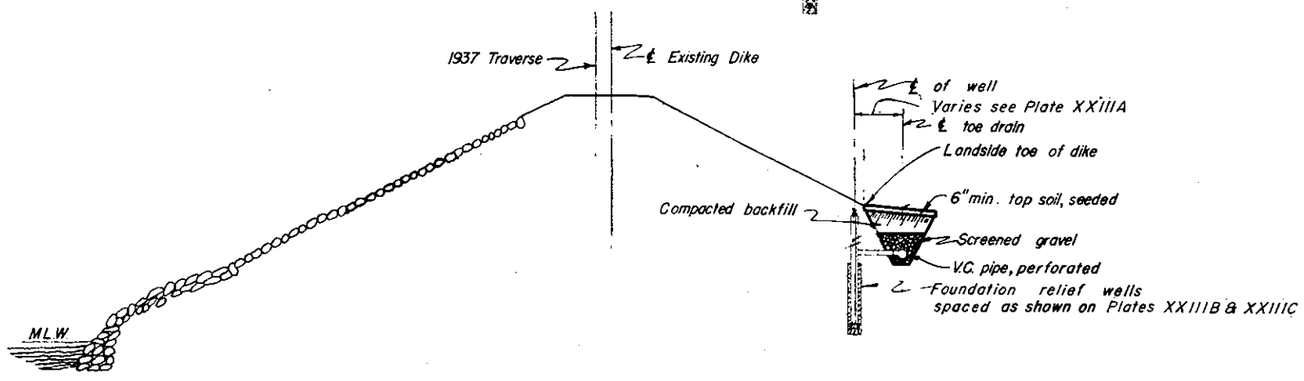

SECTION AT STA 115+50

TYPICAL FROM STA. 115+00 TO STA. 116+32
SCALE 1"=10'

NOTE:

Dimension "A" is 2'-0"min. (one length of pipe) for standard case. Dimension "A" may be increased in 2'-0" increments of solid pipe if required by the Contracting officer dependent on local soil type. Top of gravel packing is 1' above top of porous pipe.

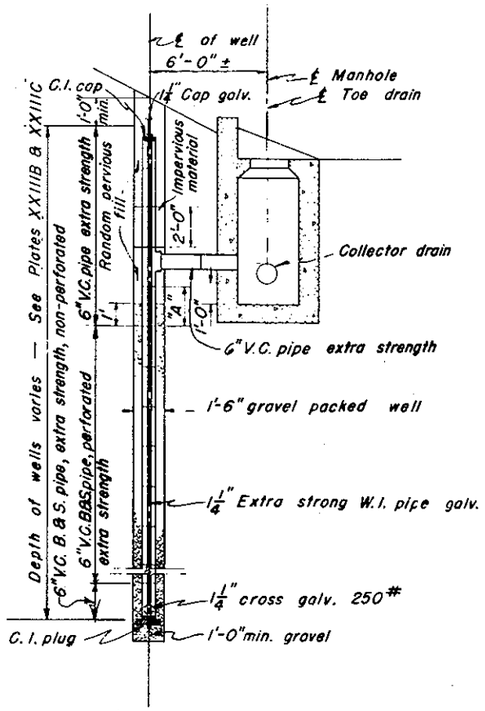

DETAIL OF TYPE A FOUNDATION RELIEF WELL AND MANHOLE

SCALE $\frac{1}{4}$" = 1'-0"

4' 0 4' 8'

NOTES

For details of trenches see Plate XXVIA
For additional details of foundation relief wells, see Plate XXVIB

CONNECTICUT RIVER FLOOD CONTROL
WEST SPRINGFIELD DIKE
STA. 56+87 TO AGAWAM BRIDGE
FOUNDATION TREATMENT
TYPICAL CROSS SECTIONS NO. 2
WESTFIELD RIVER MASSACHUSETTS

OPERATION AND MAINTENANCE MANUAL

PREPARED BY
CORPS OF ENGINEERS, U.S. ARMY
OFFICE OF THE DIVISION ENGINEER
NEW ENGLAND DIVISION, BOSTON, MASS.
DEC. 1950-REVISED DEC. 1953

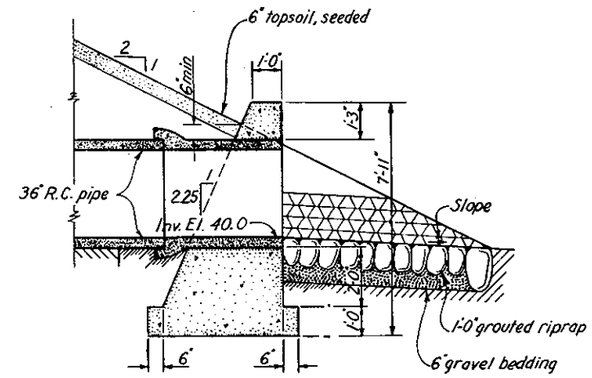

SECTION

SCALE 3/8 IN. = 1 FT.

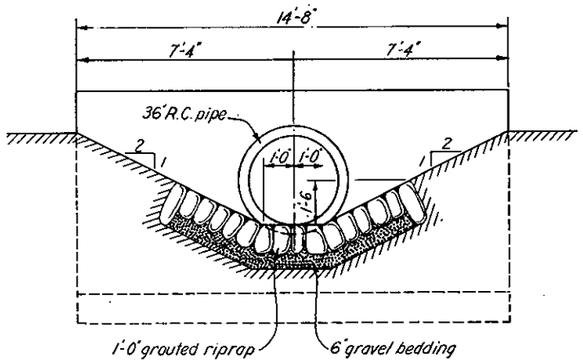

ELEVATION

DETAIL OF HEADWALL AT STA. 65 + 70 ±

SCALE 3/8 IN. = 1 FT.

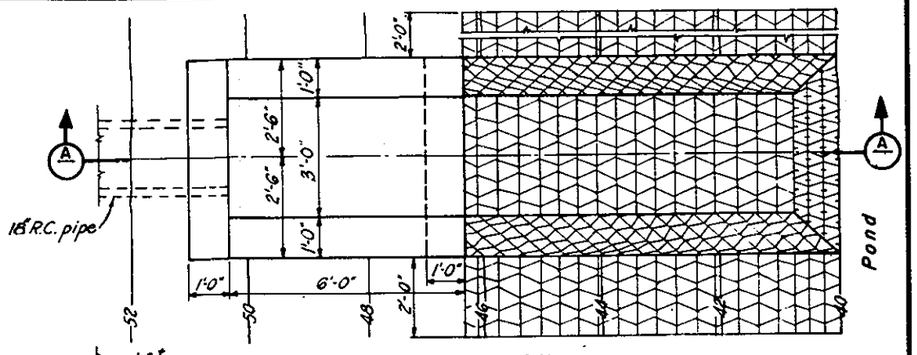

PLAN

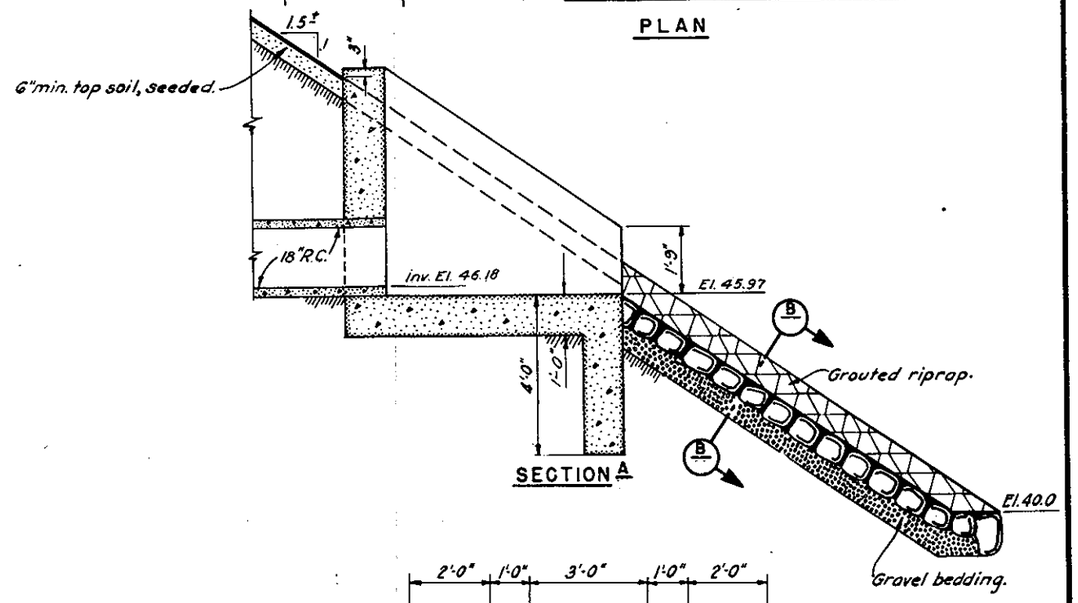

SECTION A

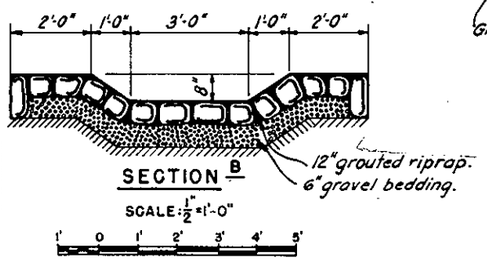

SECTION B

SCALE: 1/2" = 1'-0"

DETAILS OF HEADWALL AT STA. 64+70 ±

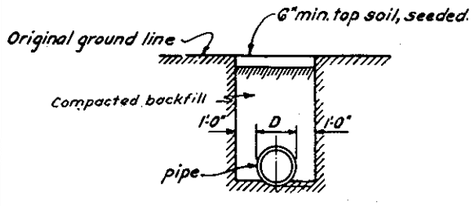

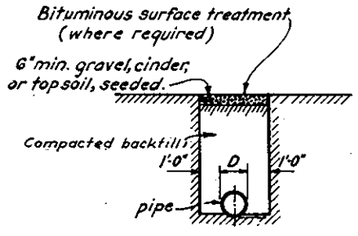

TRENCH DETAILS

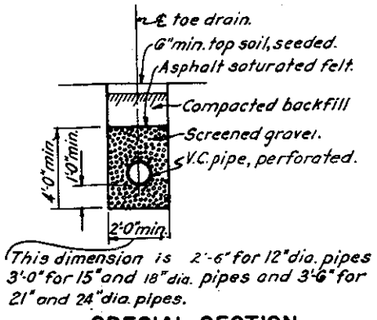

Vertical section for excavation and backfill was used at poles and was carried to 5'-0" both sides of pole.

SPECIAL SECTION OF TOE DRAIN

SCALE: 1/4" = 1'-0"

CONNECTICUT RIVER FLOOD CONTROL

WEST SPRINGFIELD DIKE

STA. 56+87 TO AGAWAM BRIDGE

FOUNDATION TREATMENT

DETAILS OF TRENCHES AND HEADWALLS

WESTFIELD RIVER MASSACHUSETTS

OPERATION AND MAINTENANCE MANUAL

PREPARED BY

CORPS OF ENGINEERS, U.S. ARMY

OFFICE OF THE DIVISION ENGINEER

NEW ENGLAND DIVISION, BOSTON, MASS.

DEC. 1950 - REVISED DEC. 1953

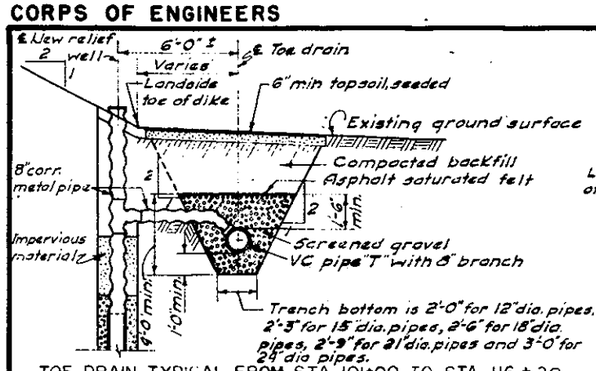

TOE DRAIN TYPICAL FROM STA. 101+00 TO STA. 116 + 32

CONNECTION DETAIL OF RELIEF WELL

TO TOE DRAIN

SCALE 1/4" = 1'-0"

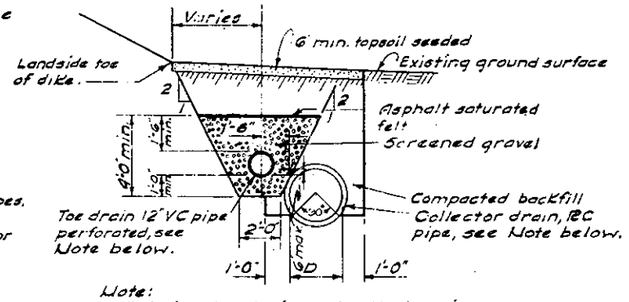

Note:
Existing toe drain and collector pipes replaced with corrugated metal pipes between Sta. 78+90 and Sta. 86+90.
For sizes and invert elevations of collector drain, see Plate XXIIIC

TYPICAL FROM STA 66 + 89 TO STA 101+00

REPAIR OF EXISTING TOE AND COLLECTOR DRAINS

SCALE 1/4" = 1'-0"

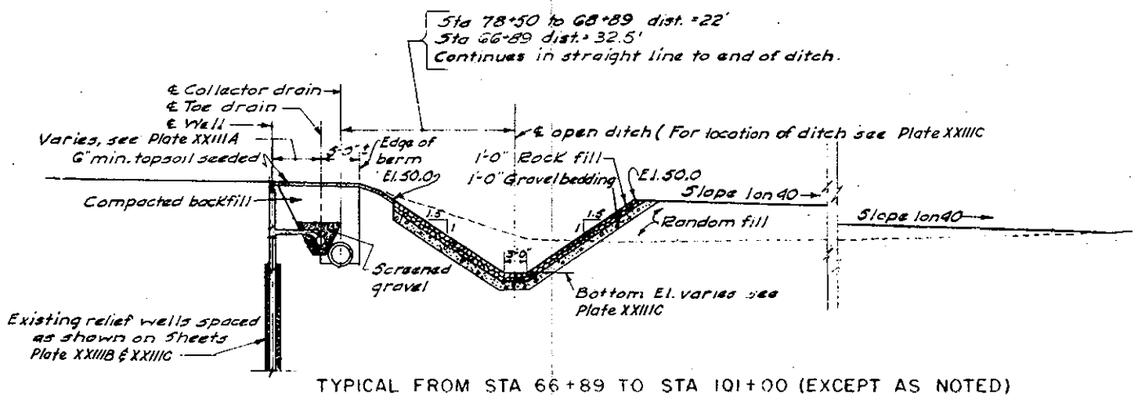

TYPICAL FROM STA 66 + 89 TO STA 101 + 00 (EXCEPT AS NOTED)

SECTION AT STA 71 + 90

SCALE 1" = 10'

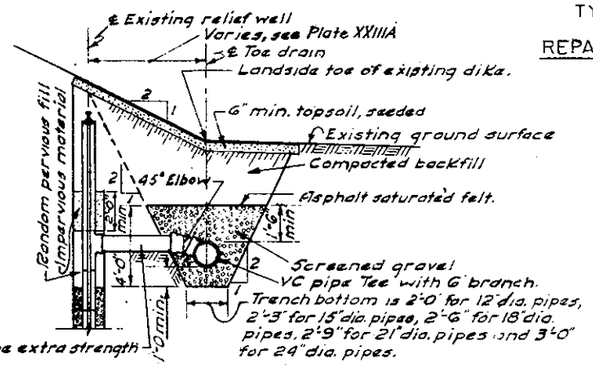

TOE DRAIN TYPICAL FROM STA. 58+64 TO STA. 66+89

CONNECTION DETAIL OF RELIEF WELL TO

TOE DRAIN

SCALE 1/4" = 1'-0"

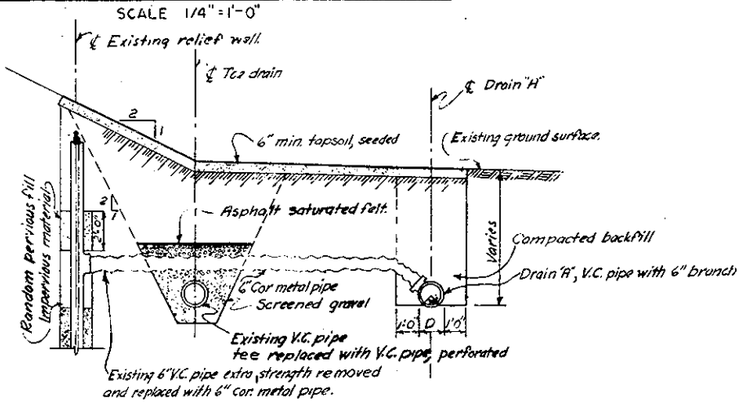

TYPICAL FROM STA 59+39 TO STA 64+58

CONNECTION DETAIL OF RELIEF WELL ACROSS TOE DRAIN

TO DRAIN "A"

SCALE 1/4" = 1'-0"

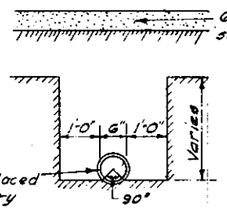

SECTION A/B

SCALE 1/2" = 1'-0"

NOTES:

For General Notes applying to details on this sheet see Plate XXIIIB

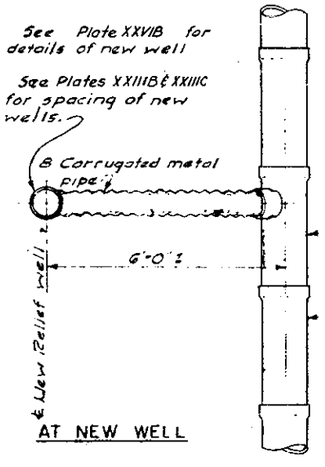

AT NEW WELL

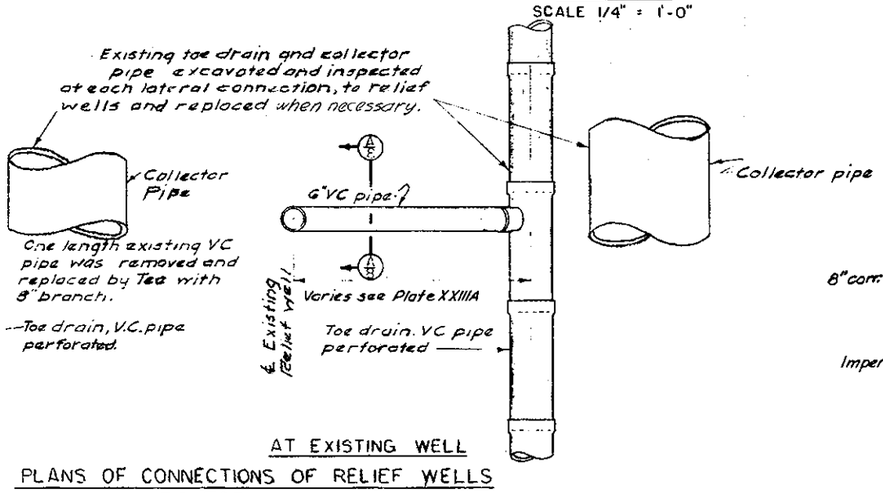

AT EXISTING WELL

PLANS OF CONNECTIONS OF RELIEF WELLS

TO TOE DRAINS

SCALE 1/2" = 1'-0"

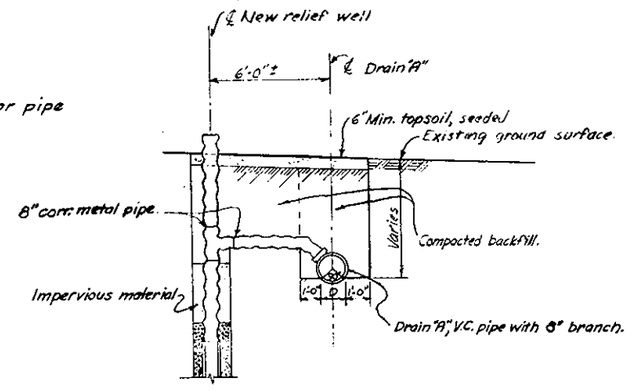

TYPICAL FROM STA 59+39 TO STA 64+58

CONNECTION DETAIL OF RELIEF WELL TO DRAIN "A"

SCALE 1/4" = 1'-0"

CONNECTICUT RIVER FLOOD CONTROL

WEST SPRINGFIELD DIKE

STA. 56+87 TO AGAWAM BRIDGE

FOUNDATION TREATMENT

DRAINAGE DETAILS

WESTFIELD RIVER MASSACHUSETTS

OPERATION AND MAINTENANCE MANUAL

PREPARED BY

CORPS OF ENGINEERS, U.S. ARMY

OFFICE OF THE DIVISION ENGINEER

NEW ENGLAND DIVISION, BOSTON, MASS.

DEC. 1953

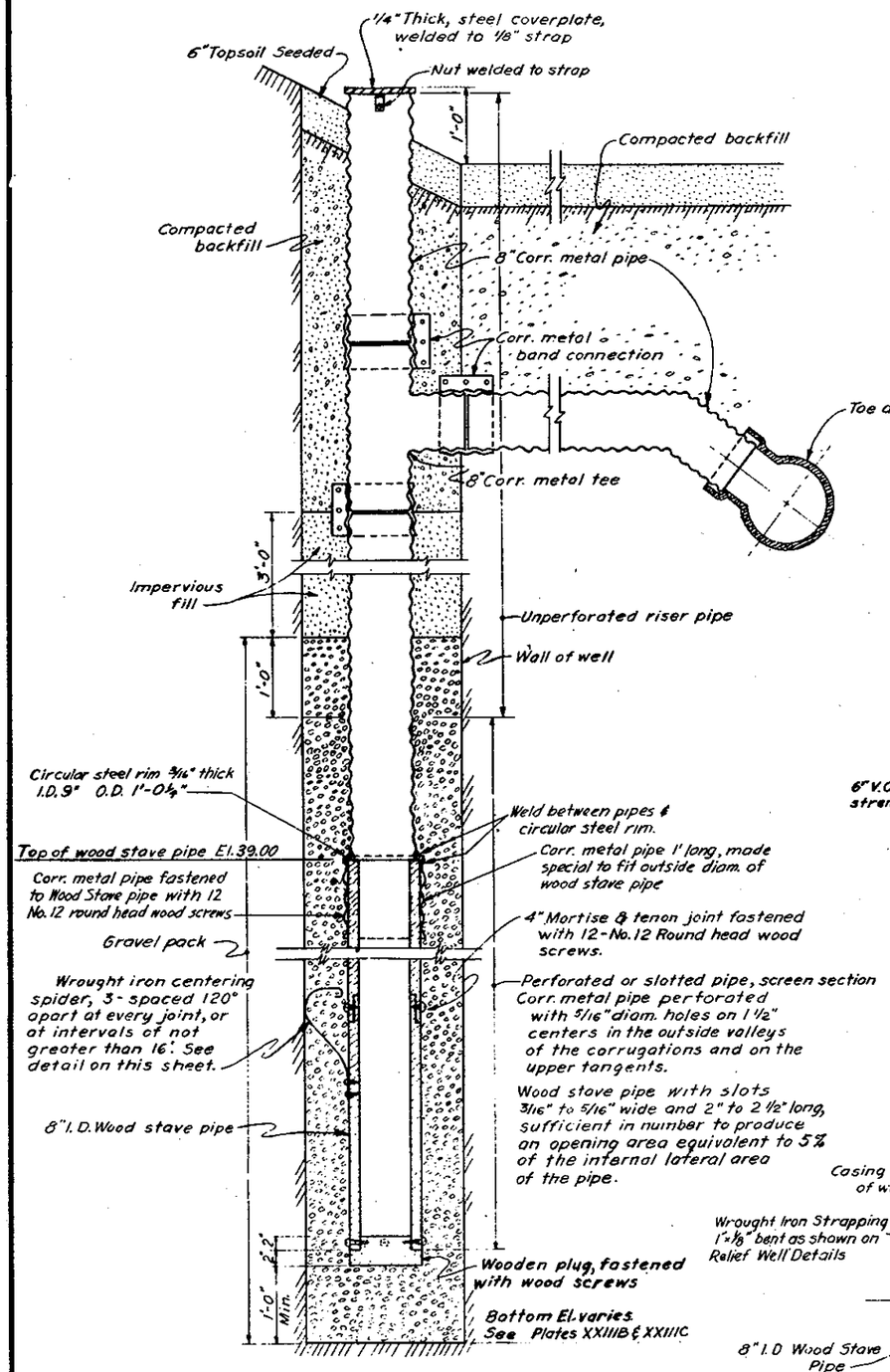

(TYPE B) RELIEF WELL DETAILS

SCALE 1" = 1'-0"

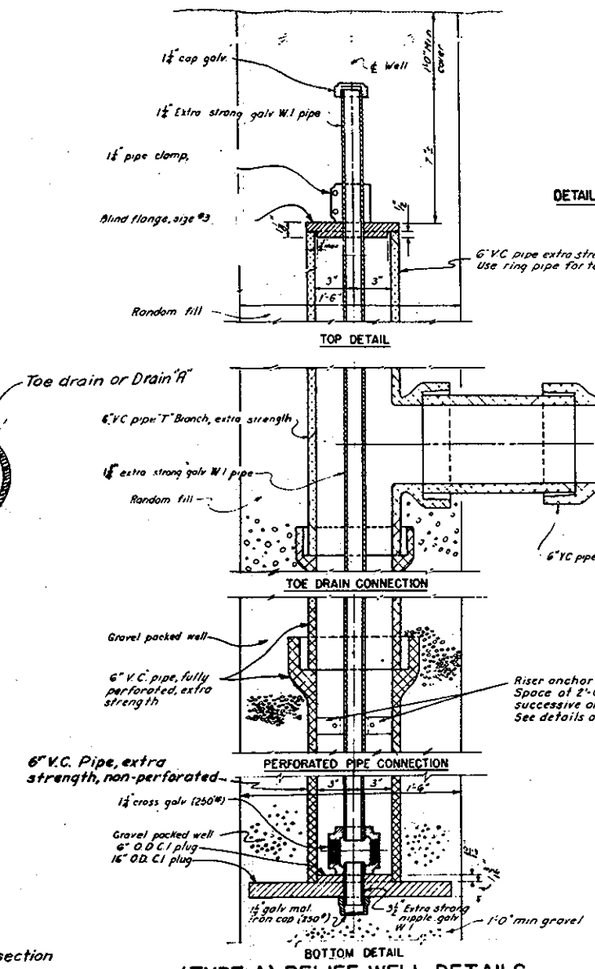

(TYPE A) RELIEF WELL DETAILS

NOT TO SCALE

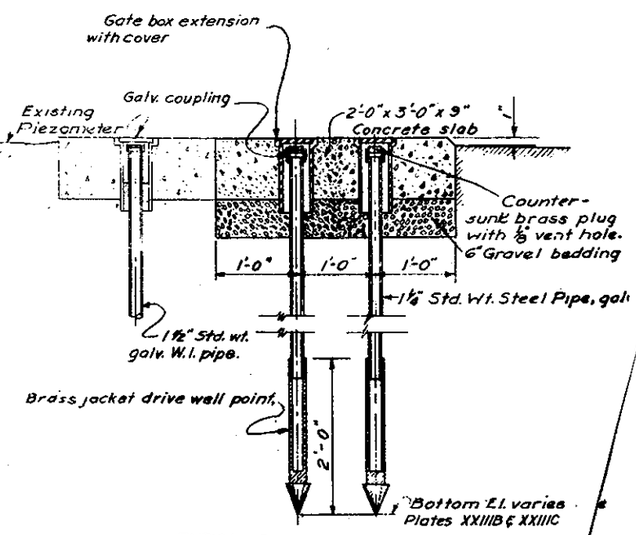

TYPICAL FOR PIEZOMETERS NO S. 1b, 1c, 2b, 2c, 4b, 4c, 5b, 5c, 9b, 9c, 10b & 10c.

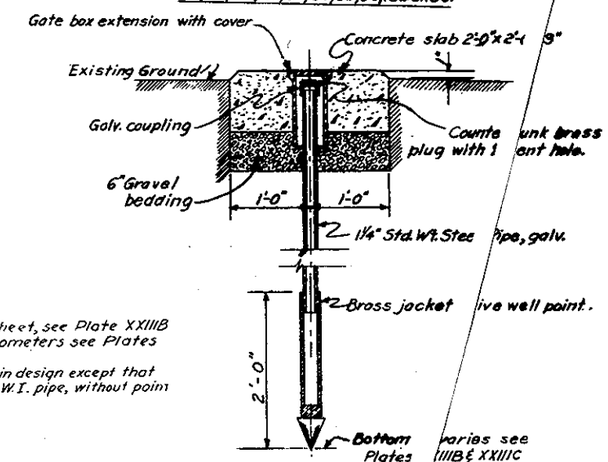

TYPICAL FOR PIEZOMETE NO'S. 14 TO 39 INCLUSIV

PIEZOMETER DE ILS

SCALE 1" = 1'-0

NOTES:

For general notes applying to this Sheet, see Plate XXIIIB

For location of relief wells and piezometers see Plates XXIIIB, XXIIIC, & XXIIID

Piezometers not detailed, are similar in design except that they were installed using 1 1/2" Std. wt. galv. W.I. pipe, without poin

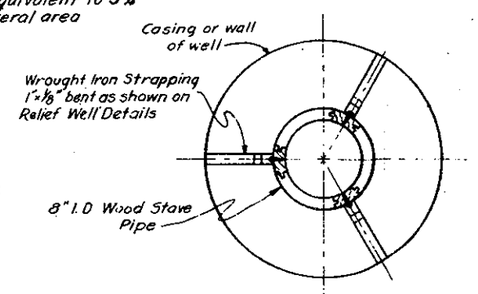

CENTERING SPIDER DETAIL

SCALE 1 1/2" = 1'-0"

PIEZOMETERS

NUMBER	ELEVATION OF TOP*	NUMBER	ELEVATION OF TOP*	NUMBER	ELEVATION OF TOP*	NUMBER	ELEVATION OF TOP*
1a	55.30	8	67.73	20	53.08	35	53.40
1b	55.26	9a	49.75	21	51.68	36	53.98
1c	55.26	9b	49.66	22	49.67	37	54.12
2a	55.01	9c	49.74	23	49.80	38	53.28
2b	54.97	10a	49.29	24	50.42	39	52.31
2c	54.94	10b	49.30	25	49.88		
3	55.04	10c	49.34	26	49.10		
4a	49.18	12	67.14	27	50.18		
4b	49.56	13	67.28	28	51.32		
4c	49.54	14	55.90	29	52.03		
5a	49.21	15	54.78	30	53.86		
5b	49.39	16	54.76	31	53.23		
5c	49.37	17	54.59	32	53.01		
6	50.07	18	54.05	33	52.74		
7	67.71	19	53.63	34	52.94		

*TOP OF COUPLING OR PIPE, AS APPLICABLE

CONNECTICUT R R FLOOD CONTROL

WEST SP NGFIELD DIKE

STA. 56+8 O AGAWAM BRIDGE

FOUNDATION TREATMENT

RELIEF WELLS AND PIEZOMETER DETAILS

WESTFIELD RIVER MASSACHUSETTS

OPERATION AND MAINTENANCE MANUAL

PREPARED BY

CORPS OF ENGINEERS, U.S. ARMY

OFFICE OF THE DIVISION ENGINEER

NEW ENGLAND DIVISION, BOSTON, MASS.

DEC. 1953

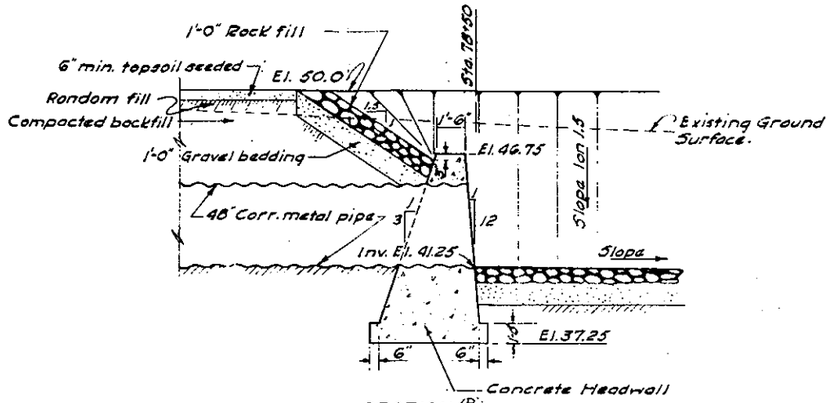

SECTION (B/11)

SCALE 1/4"=1'-0"

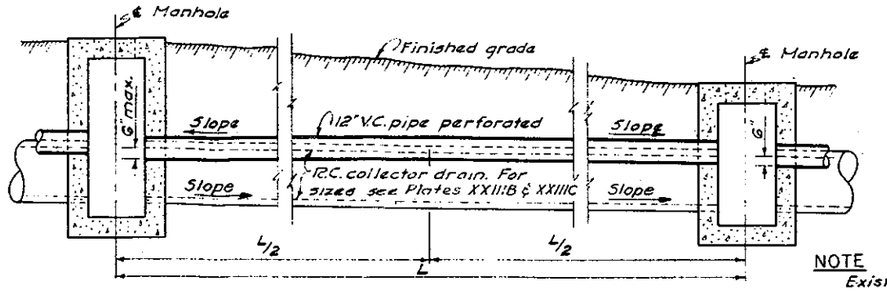

TYPICAL FROM STA. 66+89 TO STA. 101+00

DETAIL OF EXISTING TOE DRAIN WITH COLLECTOR DRAIN

SCALE 1/4"=1'-0"

NOTE

Existing R.C. and V.C. pipes removed and replaced with Corr. Metal pipe between Sta. 78+90 and Sta. 86+90. For sizes and invert elevations of Collector drain see Plate XXIIIC

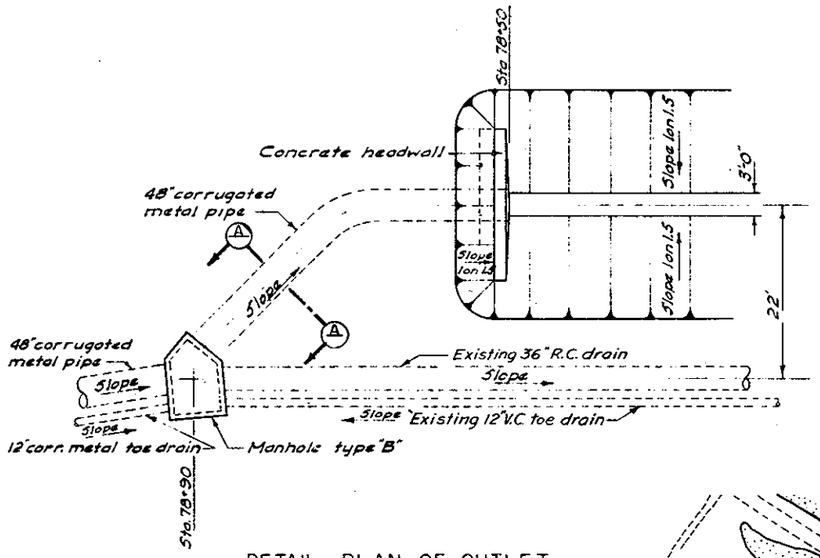

DETAIL PLAN OF OUTLET

SCALE 1"=10'

10' 0 10' 20'

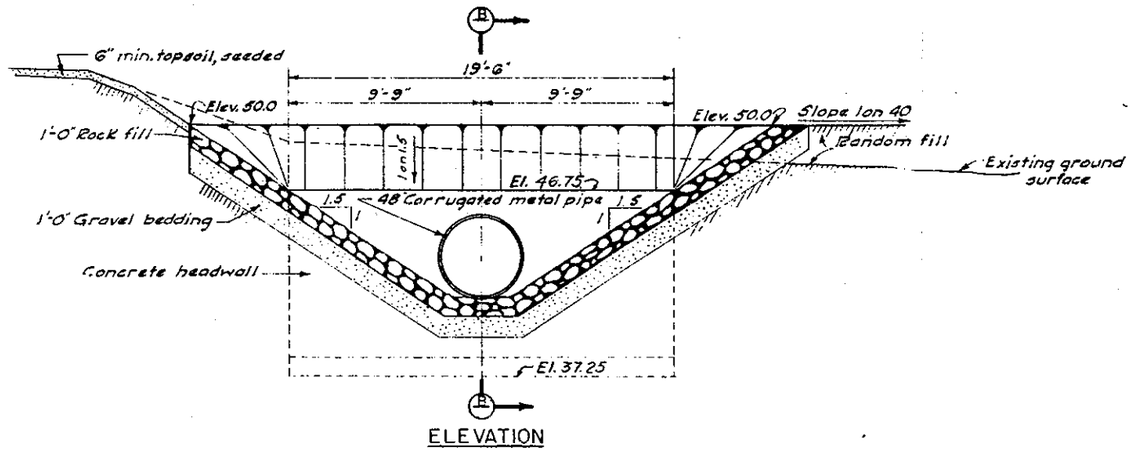

ELEVATION

DETAIL OF HEADWALL AND DITCH

SCALE 1/4"=1'-0"

NOTES

For location of ditch, see Plate XXIIIC.
For limits of Random Fill, see Plate XXIIIC
For General Notes applying to this sheet, see Plate XXIIIB

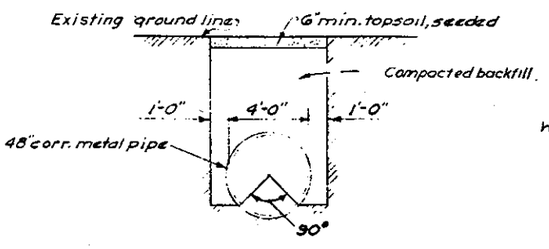

SECTION (A)

SCALE 1/4"=1'-0"

4' 0 4' 8

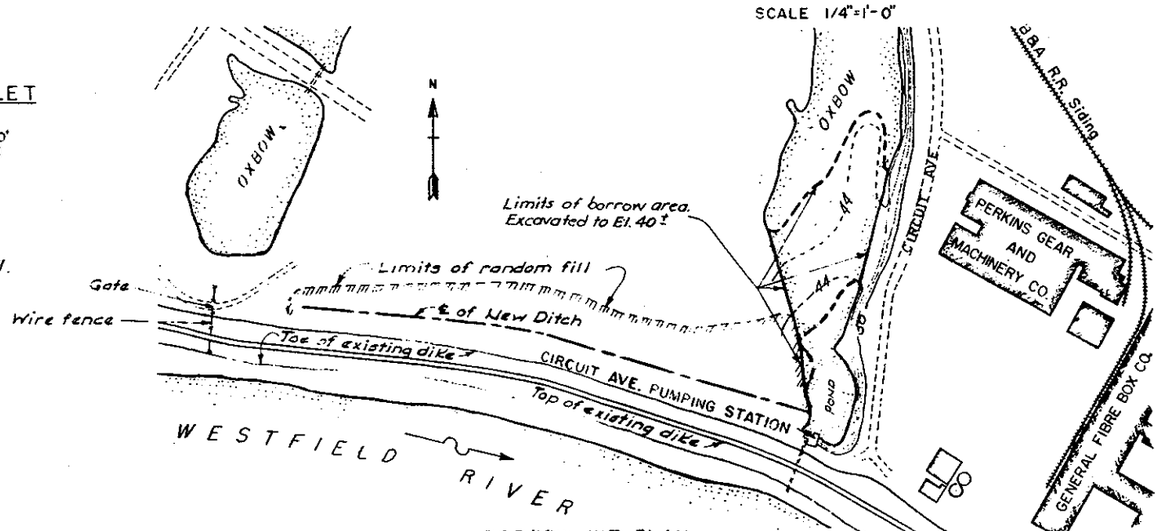

BORROW PIT PLAN
(FOR RANDOM FILL)

SCALE 1"=200'

200' 0 200' 400'

CONNECTICUT RIVER FLOOD CONTROL

WEST SPRINGFIELD DIKE

STA. 56+87 TO AGAWAM BRIDGE

FOUNDATION TREATMENT.

MISCELLANEOUS DETAILS

WESTFIELD RIVER MASSACHUSETTS

OPERATION AND MAINTENANCE MANUAL

PREPARED BY
CORPS OF ENGINEERS, U.S. ARMY
OFFICE OF THE DIVISION ENGINEER
NEW ENGLAND DIVISION, BOSTON, MASS.
DEC. 1953

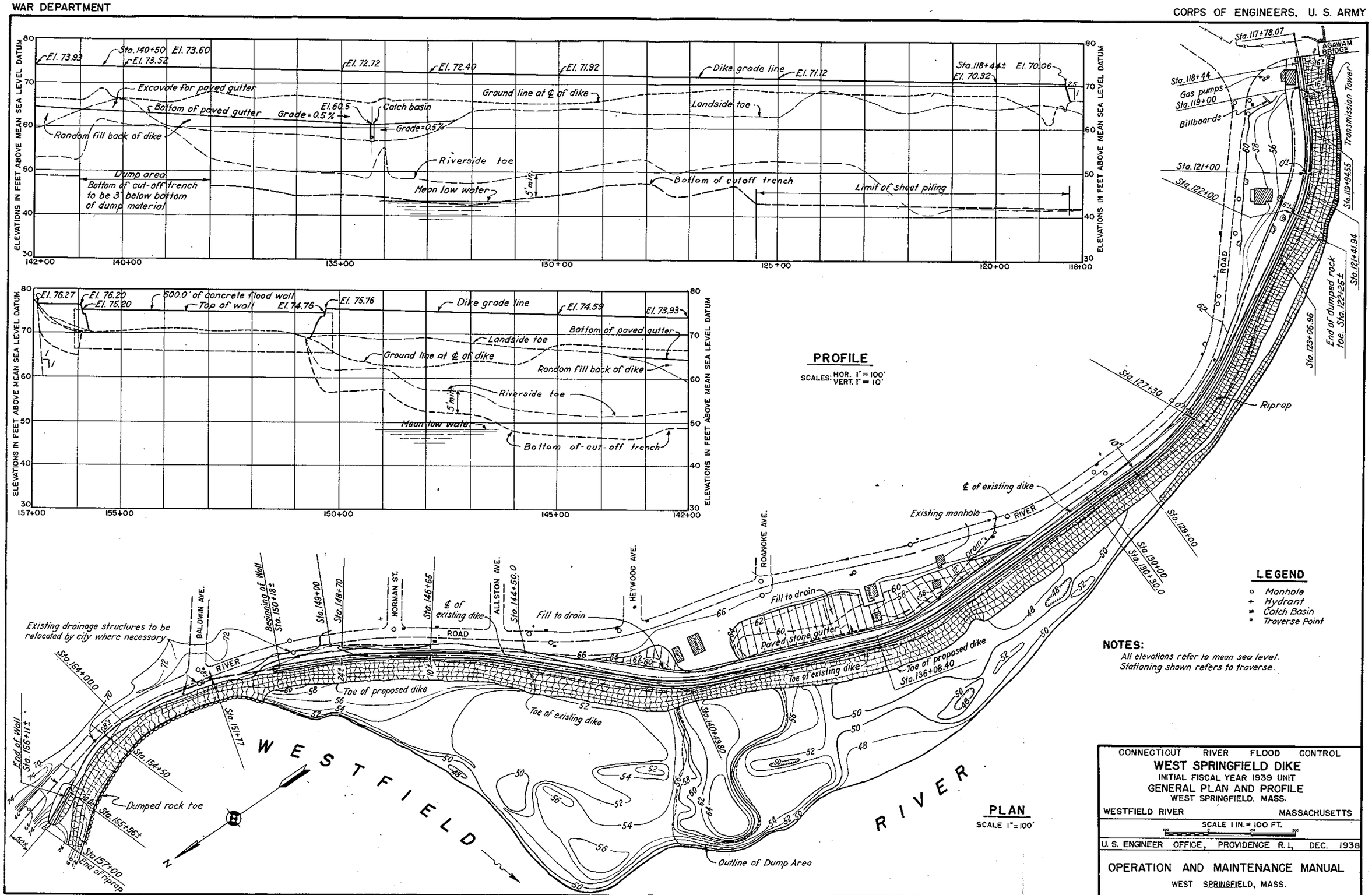
ELEVATIONS IN FEET ABOVE MEAN SEA LEVEL DATUM
El. 73.93
Sta. 140+50 El. 73.60
El. 73.52
El. 72.72
El. 72.40
El. 71.92
Dike grade line
El. 71.12
Sta. 118+44± El. 70.06
El. 70.32
Excavate for paved gutter
Bottom of paved gutter
Grade = 0.5%
El. 60.5
Catch basin
Ground line at ℄ of dike
Landside toe
Random fill back of dike
Riverside toe
Dump area
Bottom of cut-off trench to be 3' below bottom of dump material
Mean low water
5' min.
Bottom of cutoff trench
Limit of sheet piling
142+00
140+00
135+00
130+00
125+00
120+00
118+00
El. 76.27
El. 76.20
El. 75.20
500.0' of concrete flood wall
Top of wall
El. 74.76
El. 75.76
El. 74.59
El. 73.93
Bottom of paved gutter
157+00
155+00
150+00
145+00
142+00
PROFILE
SCALES: HOR. 1" = 100'
VERT. 1" = 10'
Sta. 117+78.07
AGAWAM BRIDGE
Sta. 118+44
Gas pumps
Sta. 119+00
Billboards
Transmission Tower
Sta. 121+00
Sta. 122+00
Sta. 119+94.55
Sta. 121+41.94
End of dumped rock toe. Sta. 122+25±
Sta. 123+06.98
Sta. 127+30
Riprap
Sta. 129+00
Sta. 130+00
Sta. 130+30.0
℄ of existing dike
Existing manhole
RIVER
Drain
Fill to drain
Paved stone gutter
Toe of existing dike
Toe of proposed dike
Sta. 136+08.40
ROANOKE AVE.
HEYWOOD AVE.
ALLSTON AVE.
Sta. 144+50.0
Sta. 146+65
Sta. 148+70
Sta. 149+00
Beginning of Wall
Sta. 150+18±
NORMAN ST.
BALDWIN AVE.
ROAD
Existing drainage structures to be relocated by city where necessary
Sta. 154+00.0
Sta. 151+77
Sta. 154+50
Sta. 155+96±
Sta. 157+00
End of riprap
End of Wall
Sta. 156+11±
Dumped rock toe
Sta. 140+49.80
Outline of Dump Area
WESTFIELD
RIVER
N
PLAN
SCALE 1" = 100'
LEGEND
Manhole
Hydrant
Catch Basin
Traverse Point
NOTES:
All elevations refer to mean sea level.
Stationing shown refers to traverse.
CONNECTICUT RIVER FLOOD CONTROL
WEST SPRINGFIELD DIKE
INITIAL FISCAL YEAR 1939 UNIT
GENERAL PLAN AND PROFILE
WEST SPRINGFIELD, MASS.
WESTFIELD RIVER
MASSACHUSETTS
SCALE 1 IN. = 100 FT.
U. S. ENGINEER OFFICE, PROVIDENCE R. I., DEC. 1938
OPERATION AND MAINTENANCE MANUAL
WEST SPRINGFIELD, MASS.

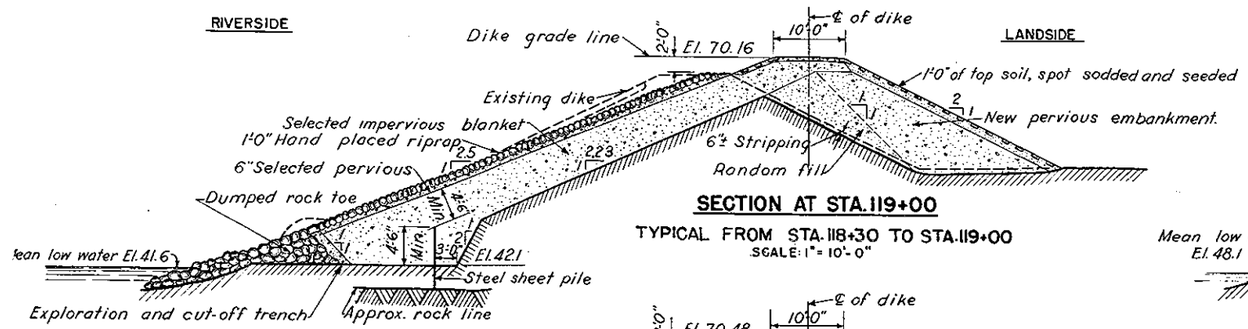

SECTION AT STA. 119+00

TYPICAL FROM STA. 118+30 TO STA. 119+00

SCALE: 1" = 10'-0"

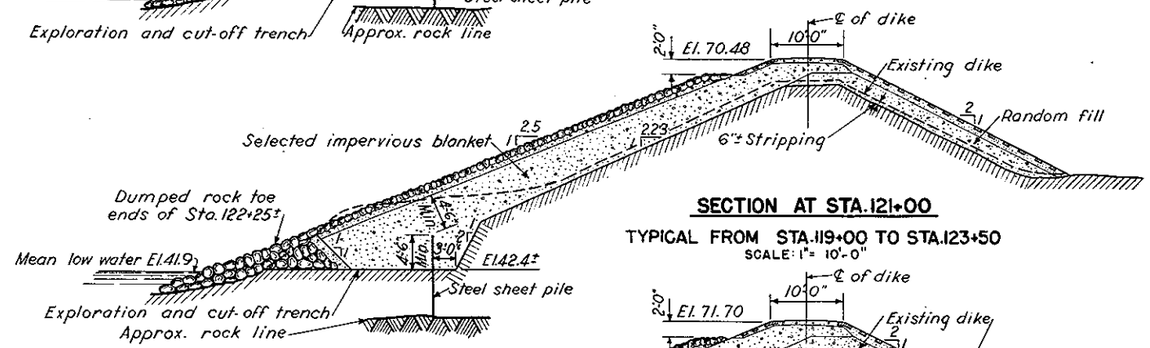

SECTION AT STA. 121+00

TYPICAL FROM STA. 119+00 TO STA. 123+50

SCALE: 1" = 10'-0"

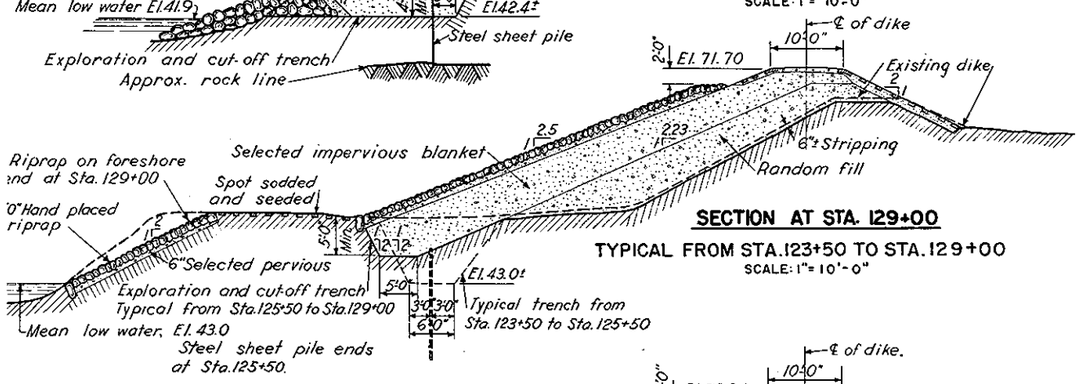

SECTION AT STA. 129+00

TYPICAL FROM STA. 123+50 TO STA. 129+00

SCALE: 1" = 10'-0"

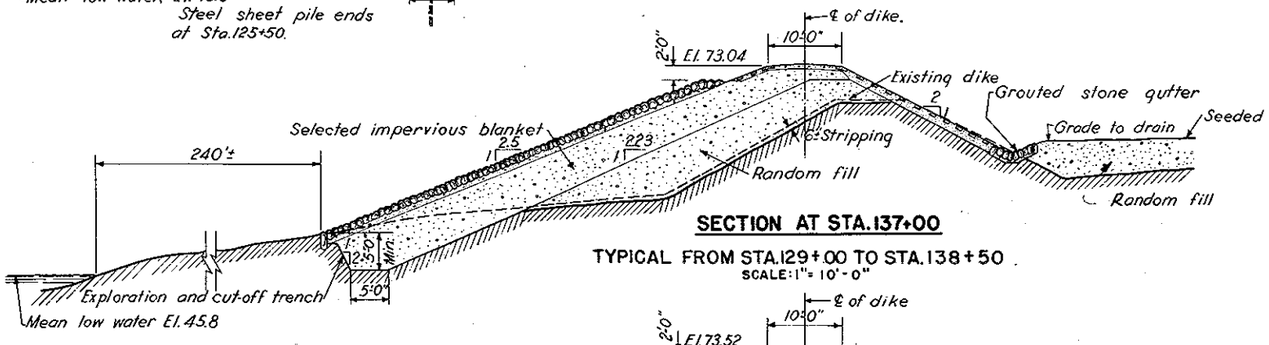

SECTION AT STA. 137+00

TYPICAL FROM STA. 129+00 TO STA. 138+50

SCALE: 1" = 10'-0"

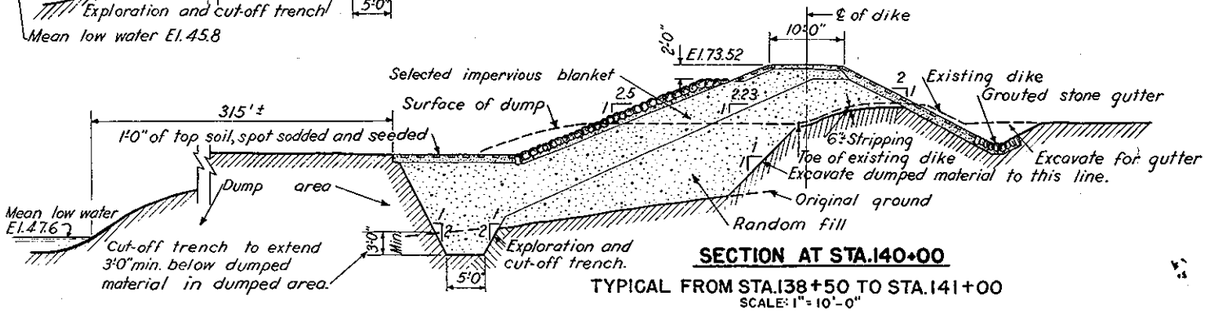

SECTION AT STA. 140+00

TYPICAL FROM STA. 138+50 TO STA. 141+00

SCALE: 1" = 10'-0"

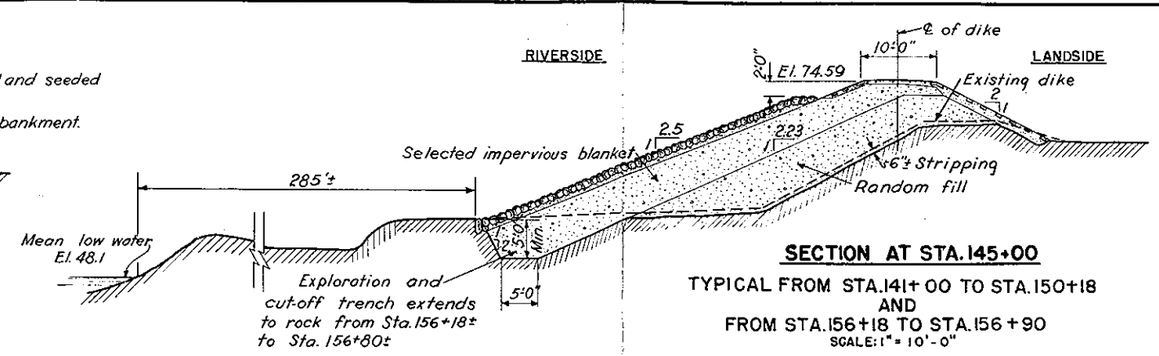

SECTION AT STA. 145+00

TYPICAL FROM STA. 141+00 TO STA. 150+18
AND
FROM STA. 156+18 TO STA. 156+90

SCALE: 1" = 10'-0"

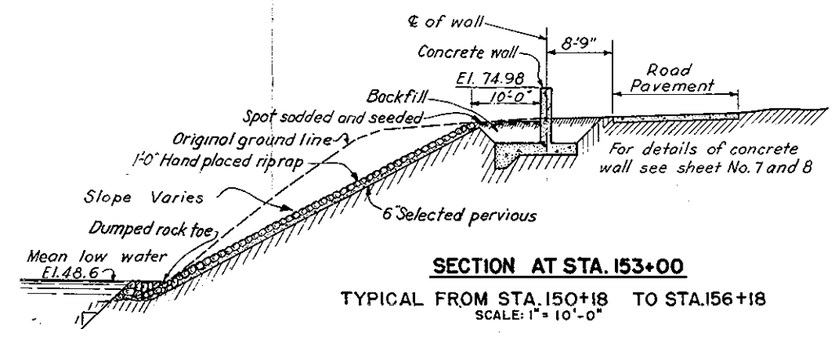

SECTION AT STA. 153+00

TYPICAL FROM STA. 150+18 TO STA. 156+18

SCALE: 1" = 10'-0"

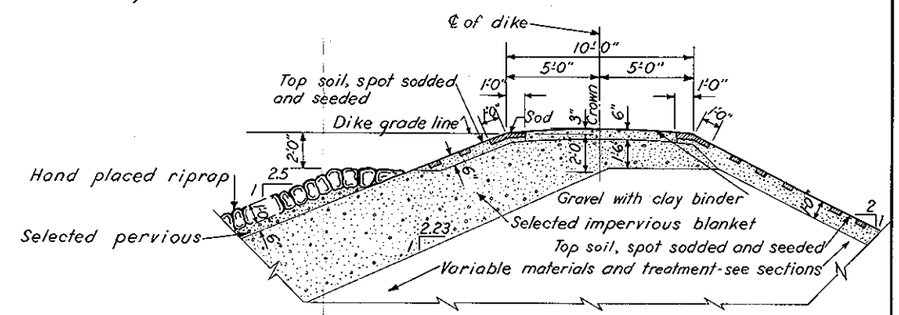

DETAIL OF TOP OF DIKE

SCALE 1/4" = 1'-0"

NOTES:

Elevations refer to Mean sea level datum.

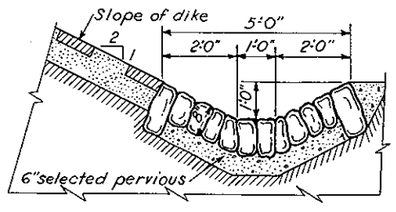

DETAIL OF GROUTED STONE GUTTER

SCALE: 1/2" = 1'-0"

CONNECTICUT RIVER FLOOD CONTROL

WEST SPRINGFIELD DIKE

TYPICAL CROSS SECTIONS

WEST SPRINGFIELD, MASS.

WESTFIELD RIVER — MASSACHUSETTS

SCALE: 1 IN = 10'-0"

U. S. ENGINEER OFFICE, PROVIDENCE R. I., DEC. 1938

OPERATION AND MAINTENANCE MANUAL

WEST SPRINGFIELD, MASS.

RIVERSIDE

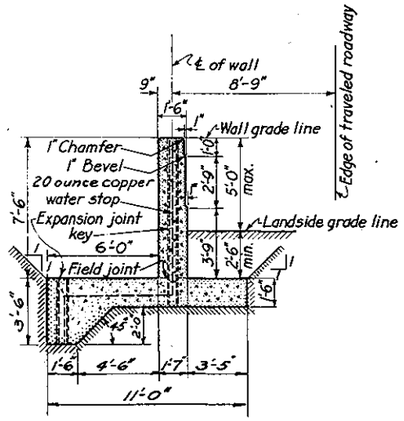

5'-0" WALL SECTION

TYPICAL FROM STA. 150+33.75 TO STA. 156+02.25
SCALE 1/4" = 1'-0"

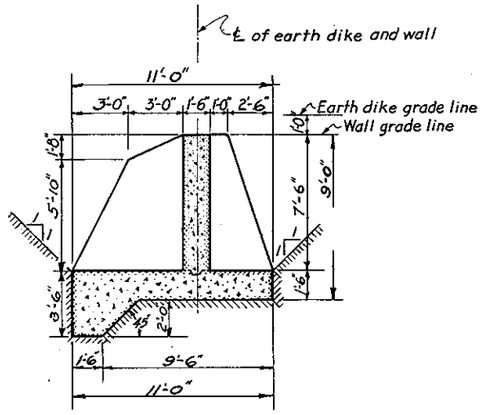

DETAILS AT CUT-OFF WALLS

TYPICAL FROM STA. 150+18 TO STA. 150+33.75
AND FROM STA. 156+02.25 TO STA. 156+18
SCALE 1/4" = 1'-0"

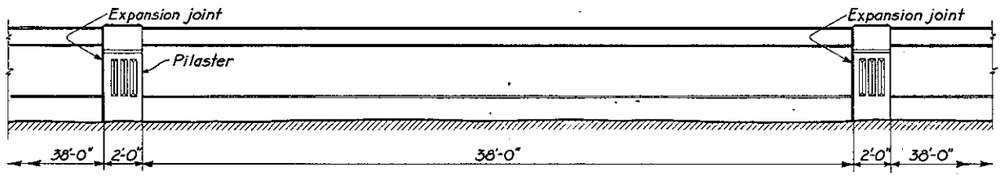

LAND SIDE ELEVATION

SCALE 1/4" = 1'-0"

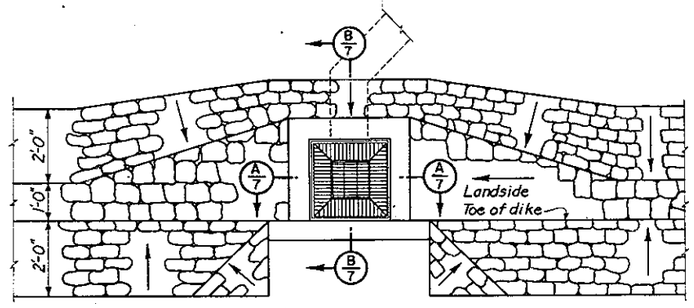

PLAN

SCALE 1/2" = 1'-0"

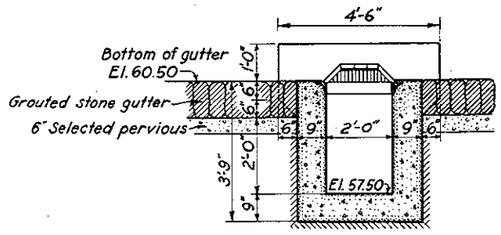

SECTION A/7

SCALE 1/2" = 1'-0"

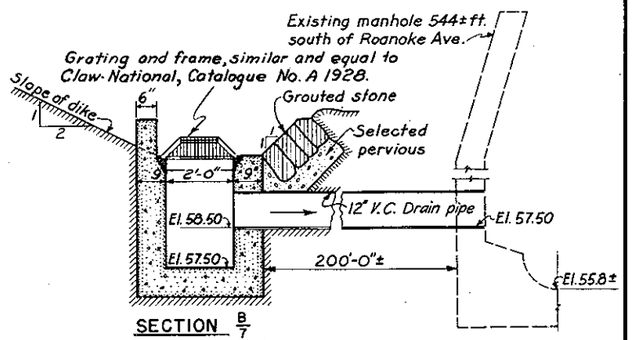

SECTION B/7

SCALE 1/2" = 1'-0"

CATCH BASIN DETAILS

STA.: 134+30

RIVERSIDE

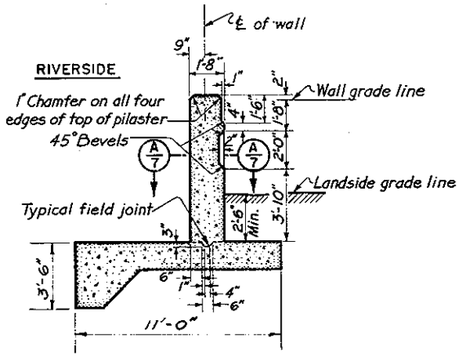

SECTION ON ℄ OF PILASTER

SCALE 1/4" = 1'-0"

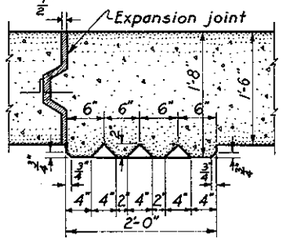

SECTION A/7

SCALE 1" = 1'-0"

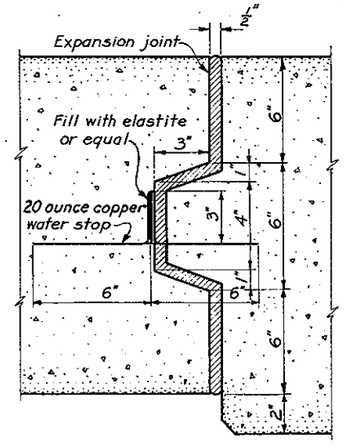

DETAIL OF EXPANSION JOINT

SCALE 3" = 1'-0"

NOTES:

Elevations refer to Mean Sea Level Datum

CONNECTICUT RIVER FLOOD CONTROL

WEST SPRINGFIELD DIKE

INITIAL FISCAL YEAR 1939 UNIT

CONCRETE DETAILS NO. 1

WEST SPRINGFIELD, MASS.

WESTFIELD RIVER MASSACHUSETTS

SCALE: 1/4 IN. = 1 FT.

U.S. ENGINEER OFFICE, PROVIDENCE, R.I. DEC. 1938

OPERATION AND MAINTENANCE MANUAL

WEST SPRINGFIELD, MASS.

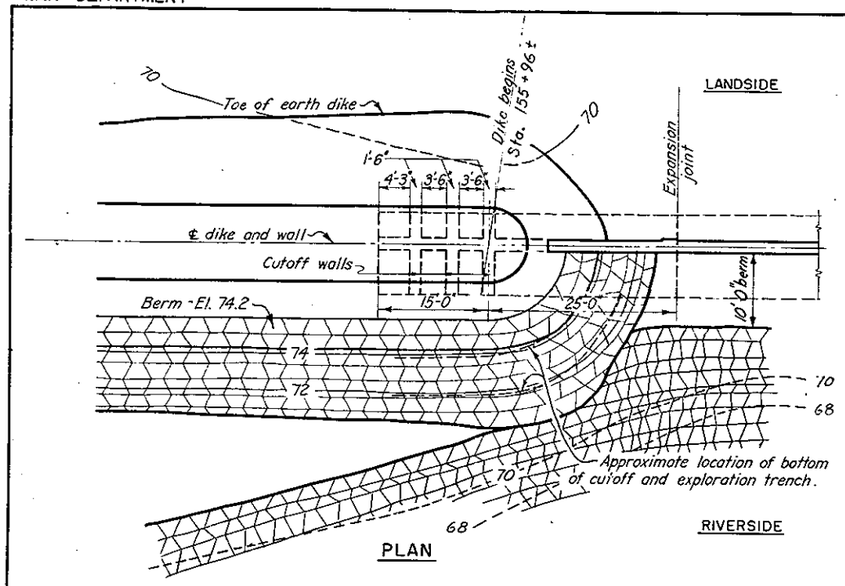

PLAN

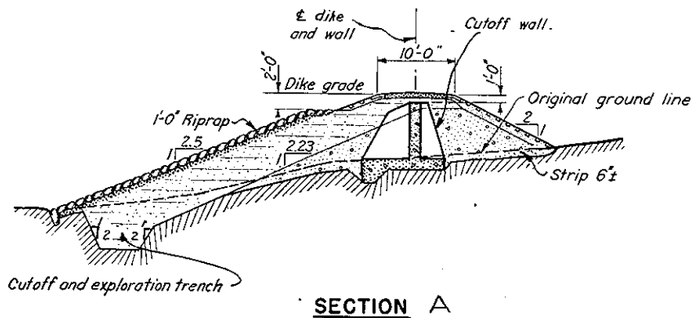

SECTION A

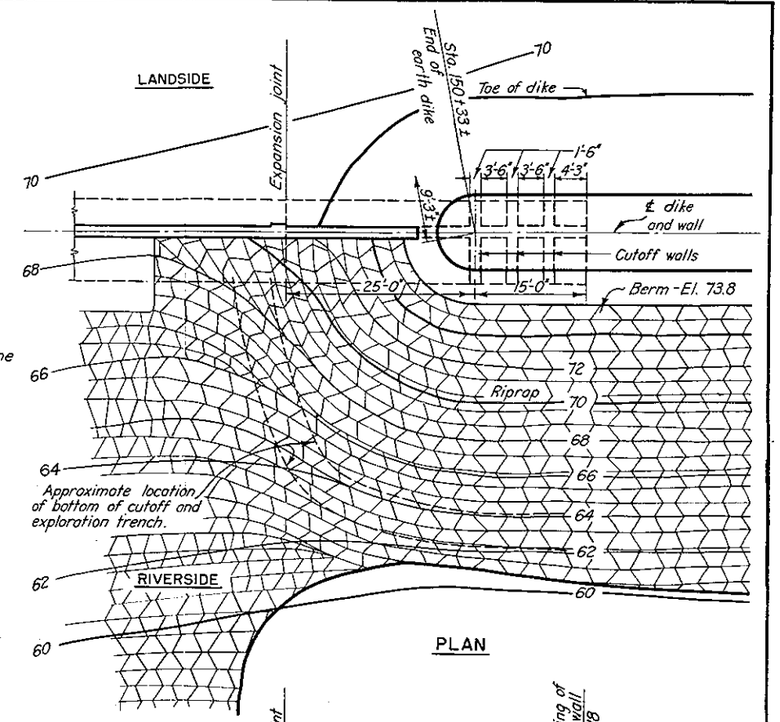

PLAN

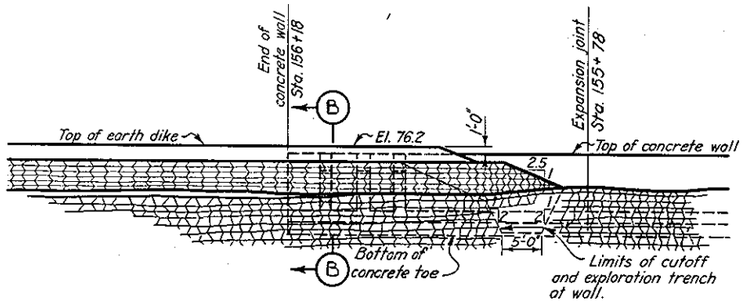

ELEVATION

JUNCTION OF CONCRETE WALL AND EARTH DIKE

AT STA. 155+96±

SCALE 1" = 10'

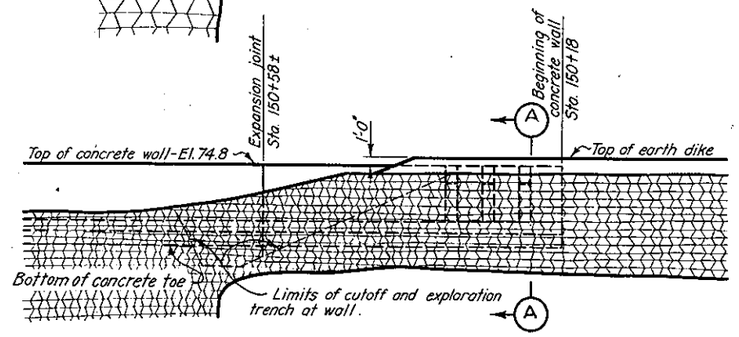

ELEVATION

JUNCTION OF CONCRETE WALL AND EARTH DIKE

AT STA. 150+33±

SCALE 1" = 10'

NOTES

Elevations refer to mean sea level datum

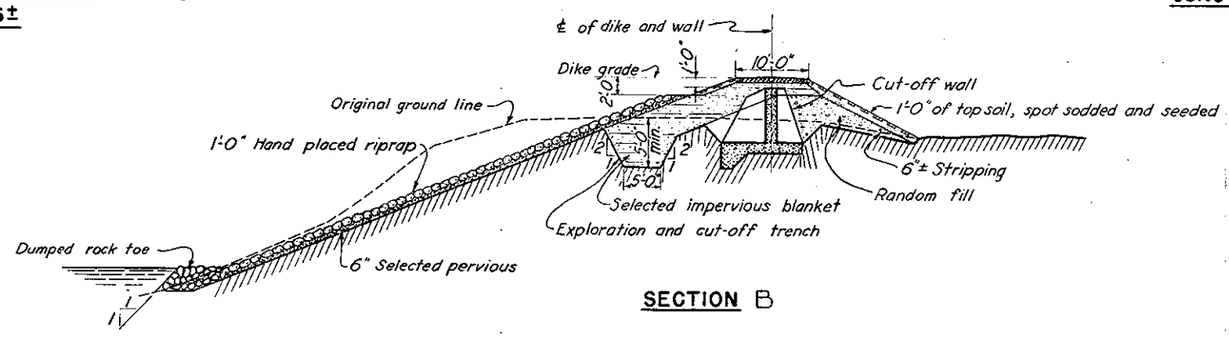

SECTION B

CONNECTICUT RIVER FLOOD CONTROL

WEST SPRINGFIELD DIKE

WEST SPRINGFIELD, MASS.

CONCRETE DETAILS NO. 2

WESTFIELD RIVER, MASSACHUSETTS

SCALE 1 IN. = 10 FT.

U. S. ENGINEER OFFICE, PROVIDENCE, R. I., DEC. 1938

OPERATION AND MAINTENANCE MANUAL

WEST SPRINGFIELD, MASS.

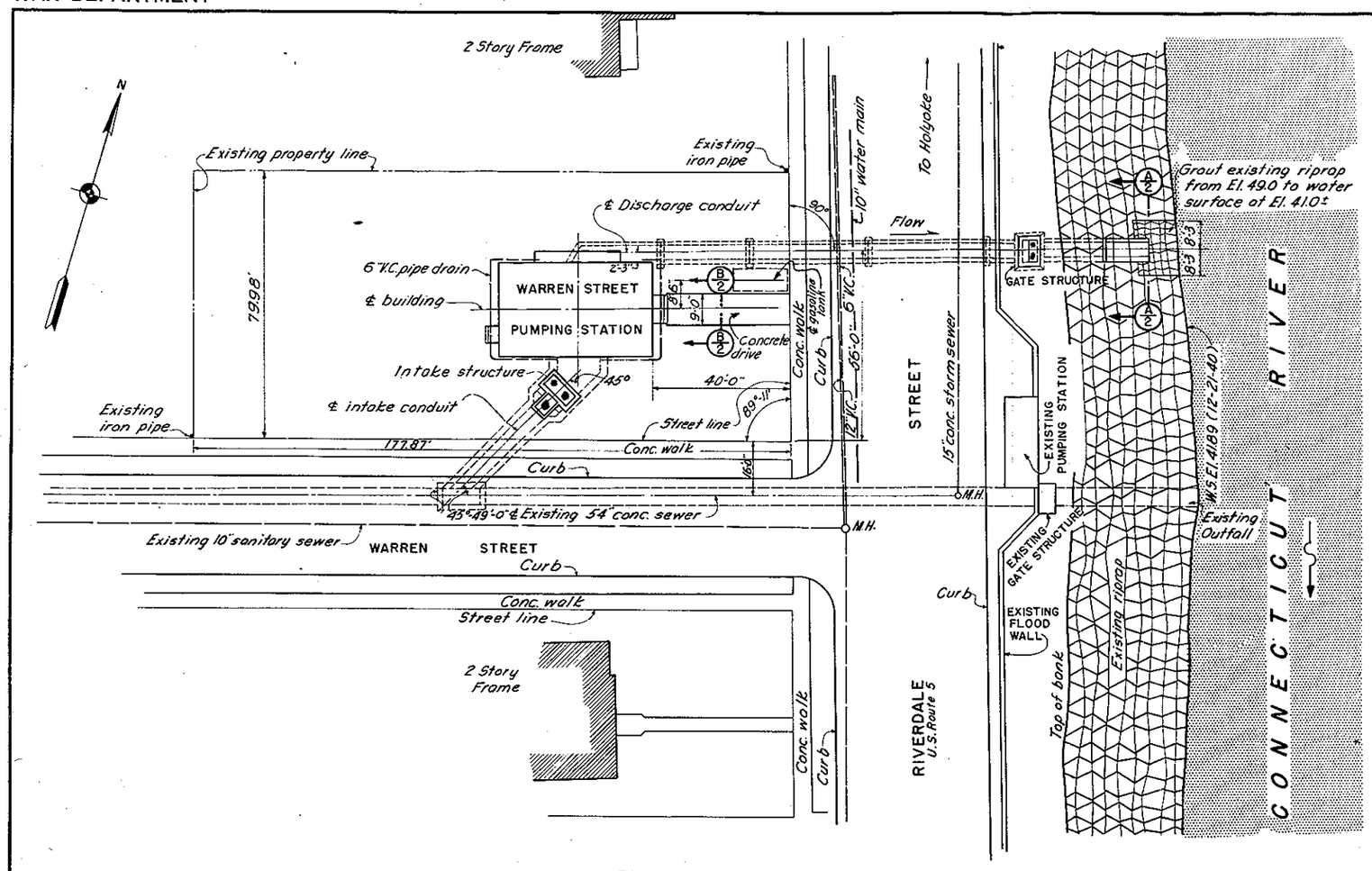

PLAN

SCALE: 1" = 20'

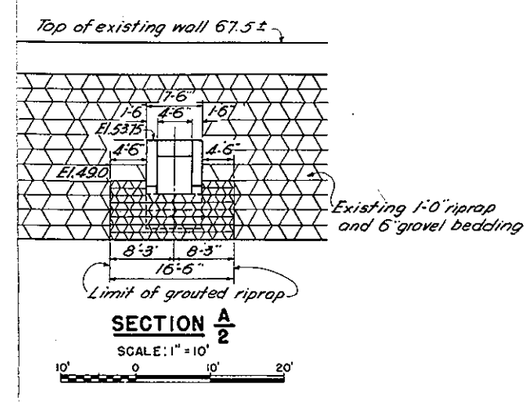

SECTION A/2

SCALE: 1" = 10'

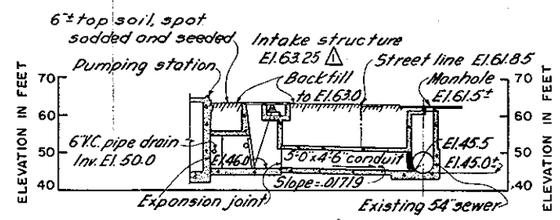

PROFILE ALONG ℄ INTAKE

SCALE: 1" = 20'

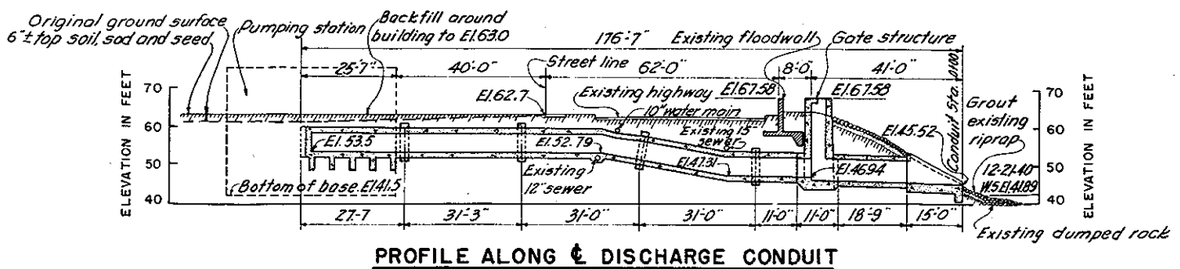

PROFILE ALONG ℄ DISCHARGE CONDUIT

SCALE: 1" = 20'

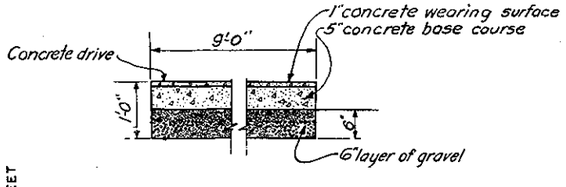

SECTION B/2

SCALE: 3/4" = 1'-0"

CONNECTICUT RIVER FLOOD CONTROL

WARREN STREET PUMPING STATION

WEST SPRINGFIELD, MASS.

GENERAL PLAN

CONNECTICUT RIVER — MASSACHUSETTS

SCALE: 1 IN. = 20 FT.

U. S. ENGINEER OFFICE, PROVIDENCE, R.I., MARCH 1941

OPERATION AND MAINTENANCE MANUAL

WEST SPRINGFIELD, MASS.

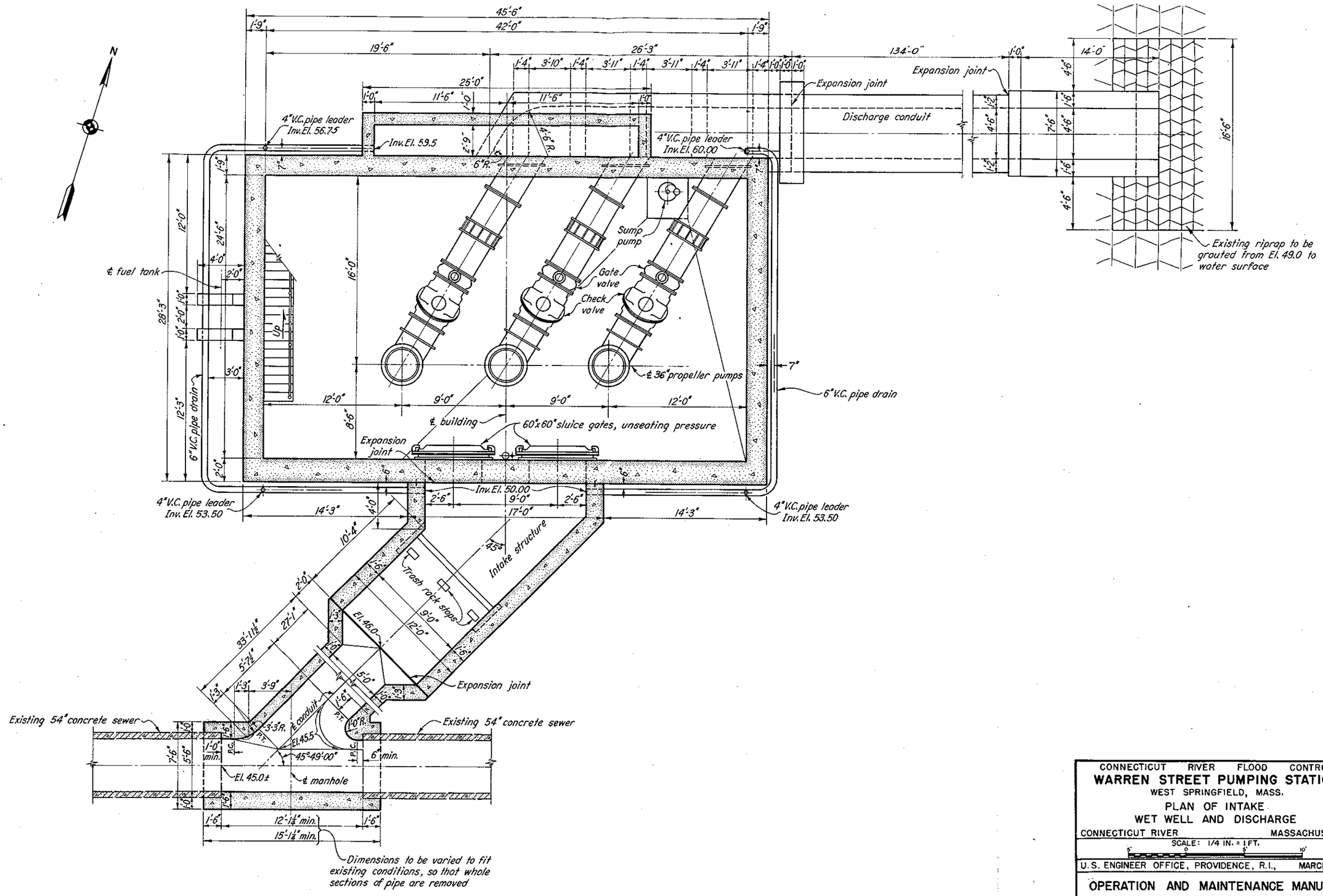

CONNECTICUT RIVER FLOOD CONTROL

WARREN STREET PUMPING STATION

WEST SPRINGFIELD, MASS.

PLAN OF INTAKE
WET WELL AND DISCHARGE

CONNECTICUT RIVER — MASSACHUSETTS

SCALE: 1/4 IN. = 1 FT.

U. S. ENGINEER OFFICE, PROVIDENCE, R.I., MARCH 1941

OPERATION AND MAINTENANCE MANUAL

WEST SPRINGFIELD, MASS.

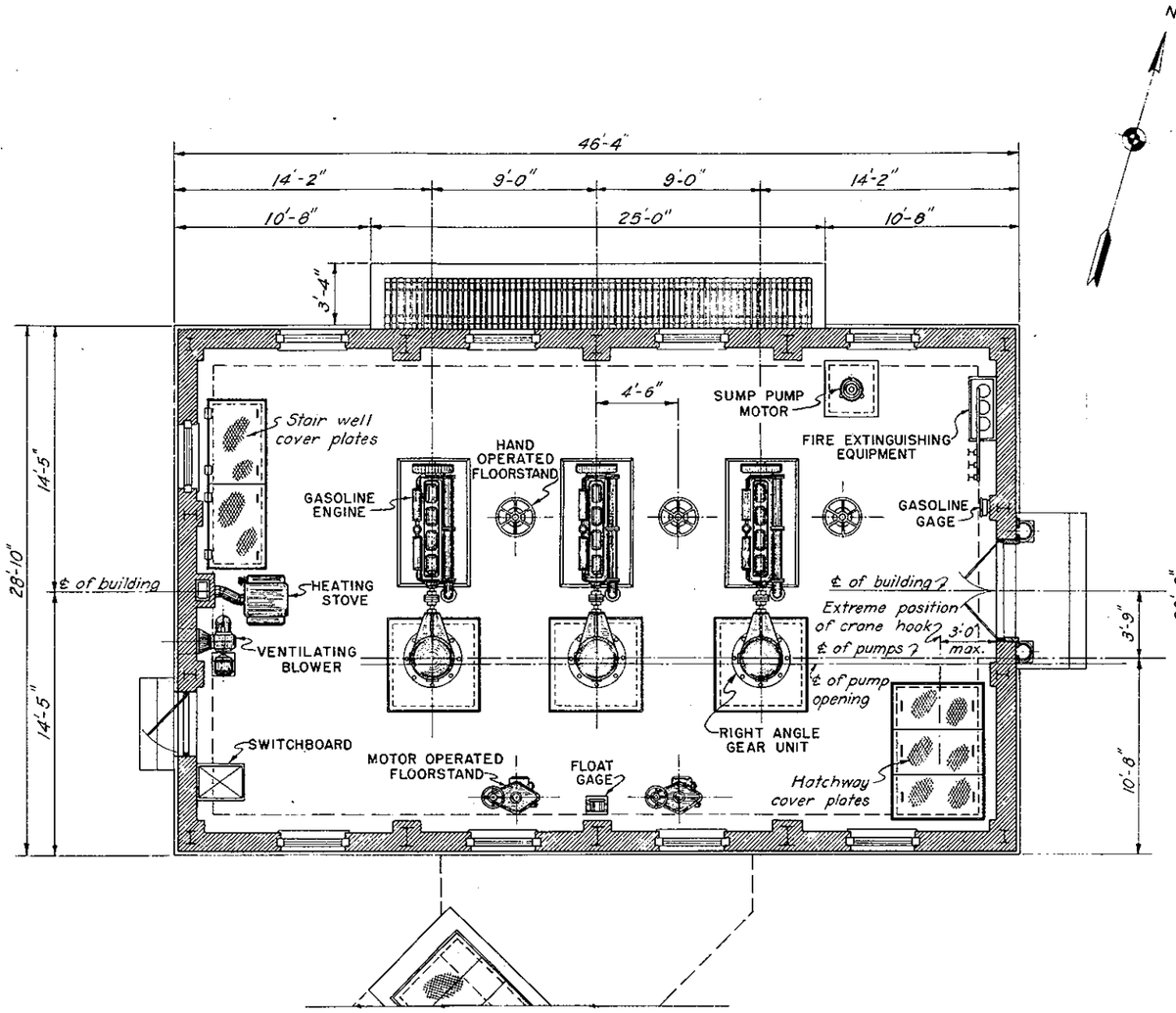

ENGINE ROOM PLAN

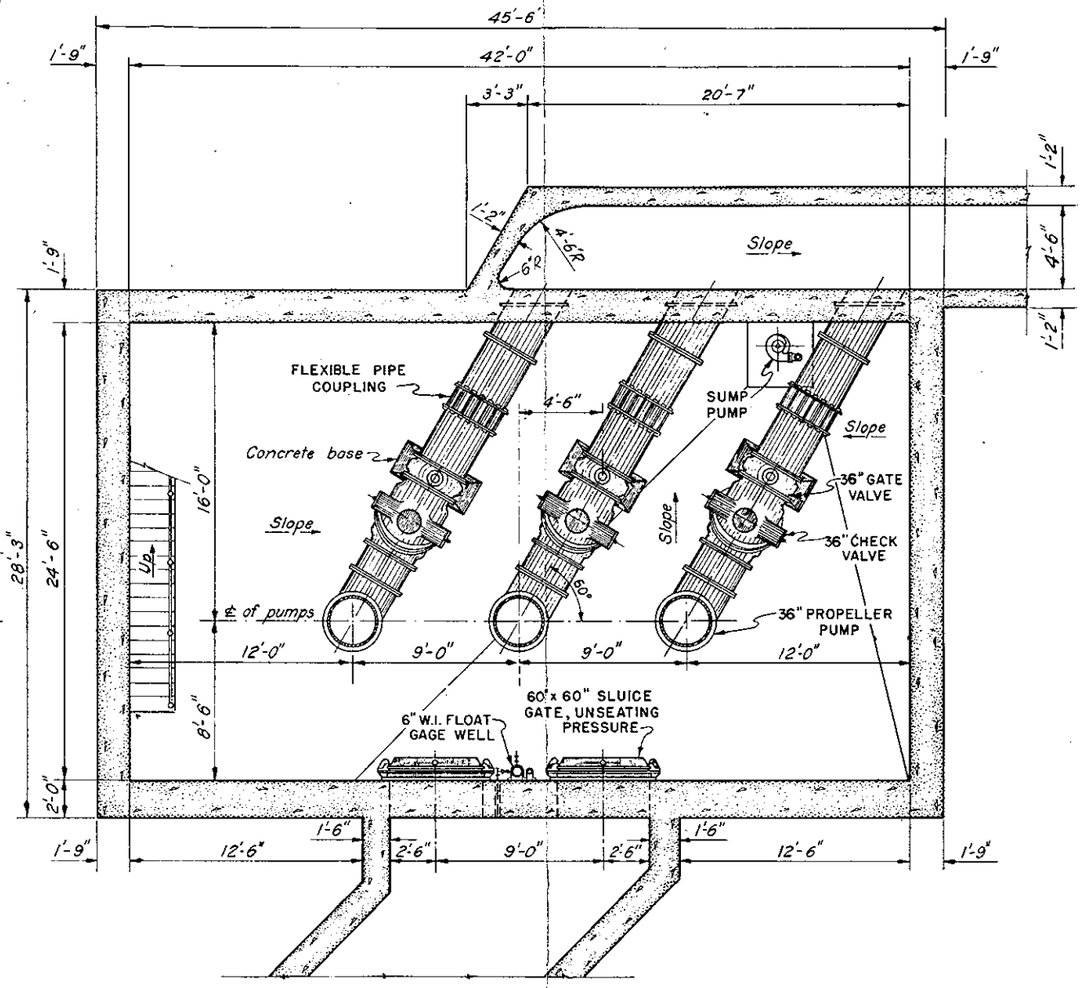

PUMP ROOM PLAN

CONNECTICUT RIVER FLOOD CONTROL

WARREN STREET PUMPING STATION

WEST SPRINGFIELD, MASS.

GENERAL ARRANGEMENT OF EQUIPMENT NO.1

CONNECTICUT RIVER — MASSACHUSETTS

SCALE: 1/4 IN. = 1 FT.

5' 0 5' 10'

U.S. ENGINEER OFFICE, PROVIDENCE, R.I., MARCH 1941

OPERATION AND MAINTENANCE MANUAL

WEST SPRINGFIELD, MASS.

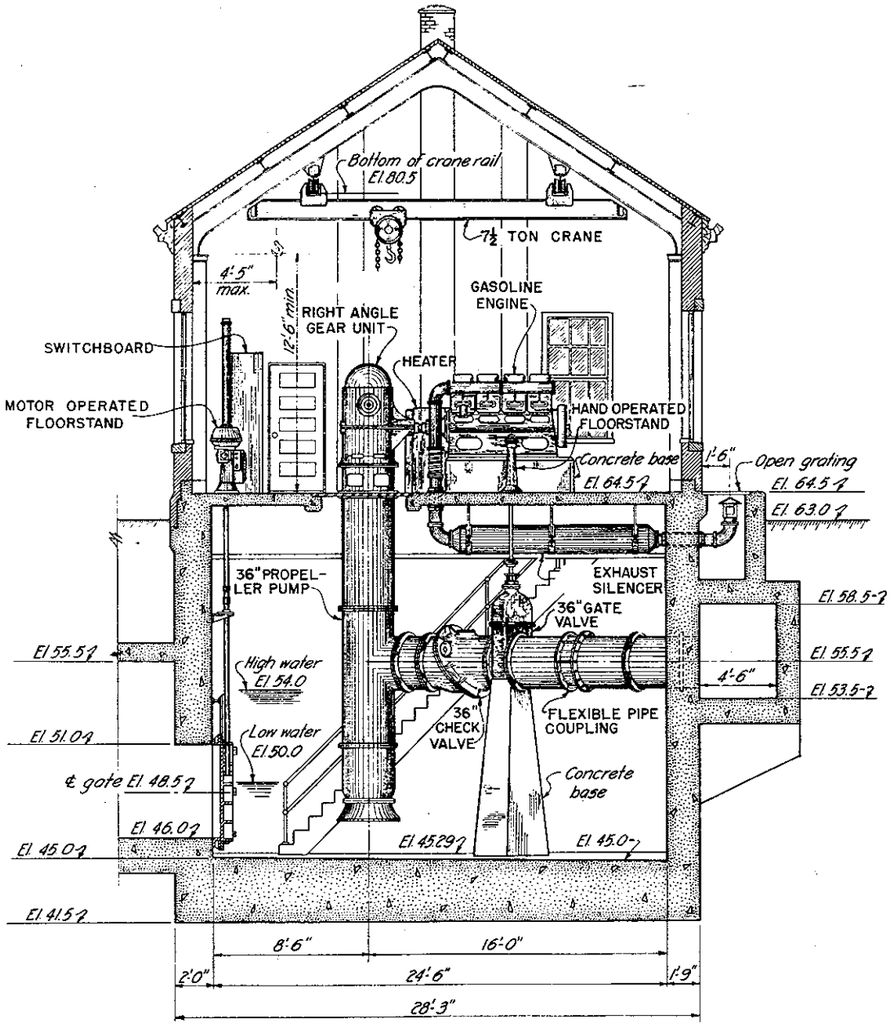

SECTION A/38

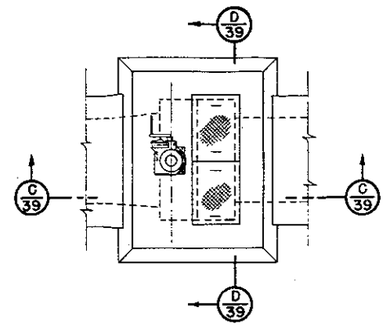

PLAN

(SLUICE GATE AT OUTLET OF DISCHARGE CONDUIT)

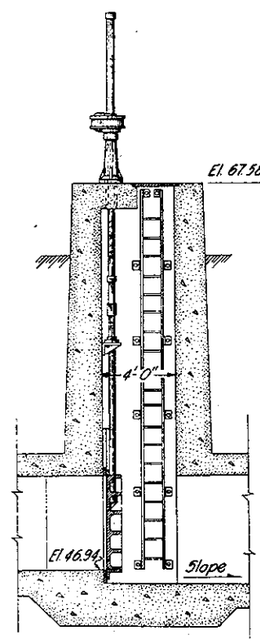

SECTION C/39

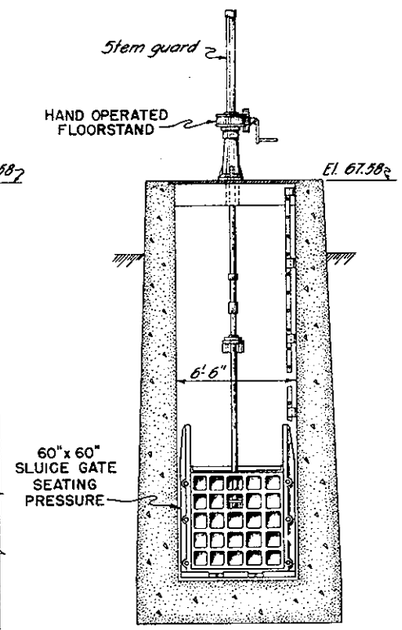

SECTION D/39

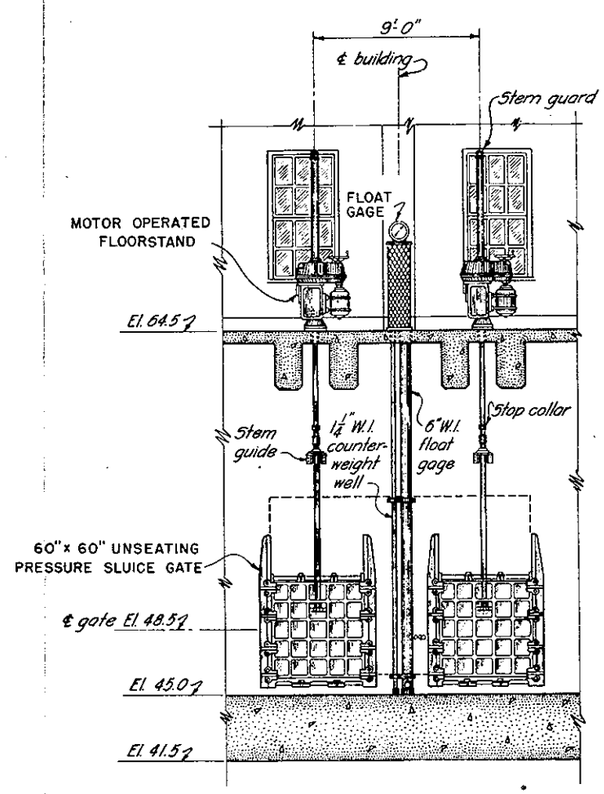

SECTION B/38

CONNECTICUT RIVER FLOOD CONTROL

WARREN STREET PUMPING STATION

WEST SPRINGFIELD, MASS.

GENERAL ARRANGEMENT OF EQUIPMENT NO.2

CONNECTICUT RIVER — MASSACHUSETTS

SCALE: 1/4 IN. = 1 FT.

U.S. ENGINEER OFFICE, PROVIDENCE, R.I., MARCH 1941

OPERATION AND MAINTENANCE MANUAL

WEST SPRINGFIELD, MASS.

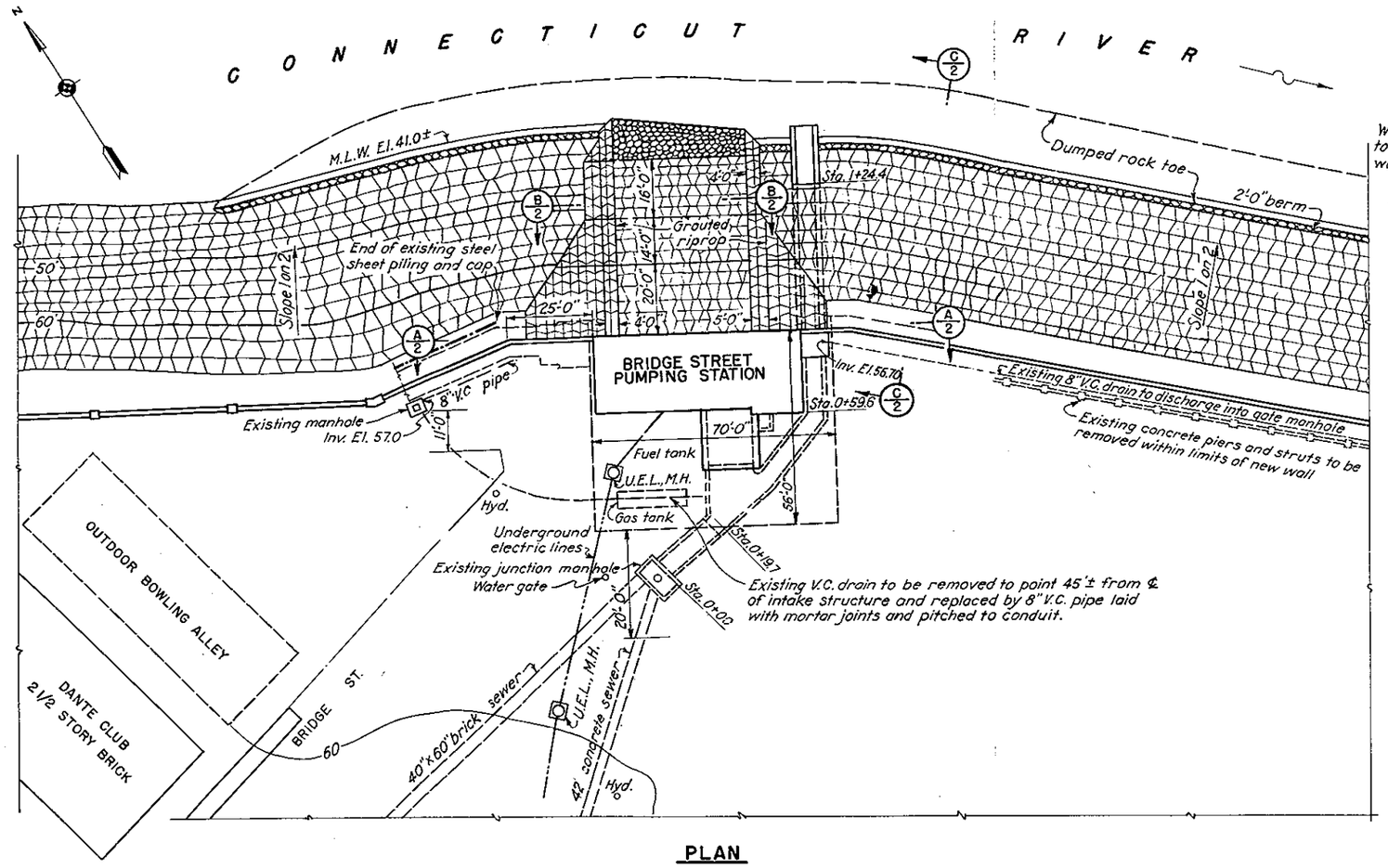

PLAN

SCALE 1" = 20'

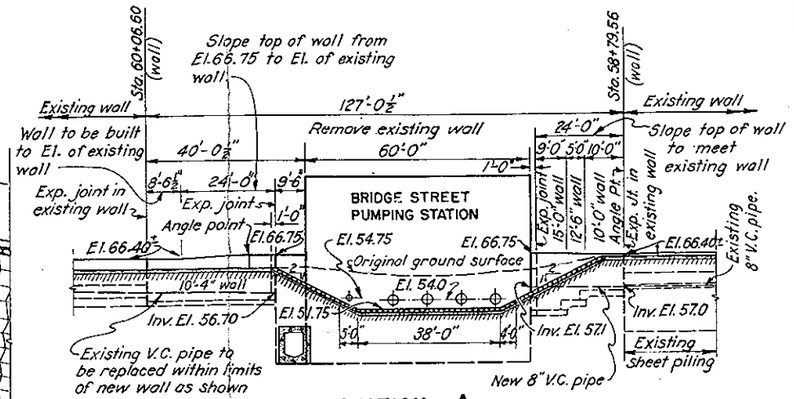

SECTION A/2

SCALE 1" = 20'

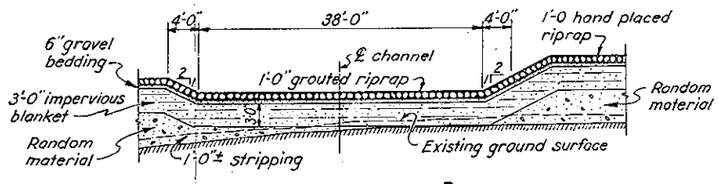

SECTION B/2

SCALE 1" = 10'

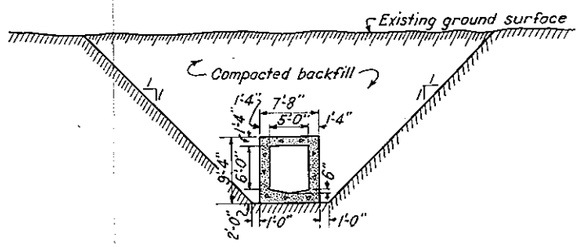

SECTION THRU CONDUIT

SCALE 1" = 10'

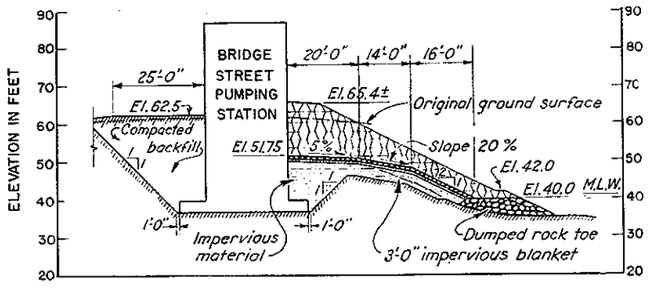

PROFILE ALONG ℄ CHANNEL

SCALE 1" = 20'

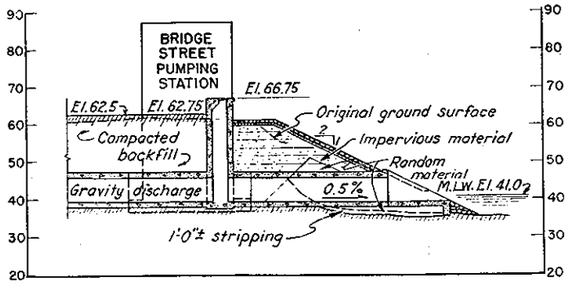

PROFILE ALONG ℄ CONDUIT

SCALE 1" = 20'

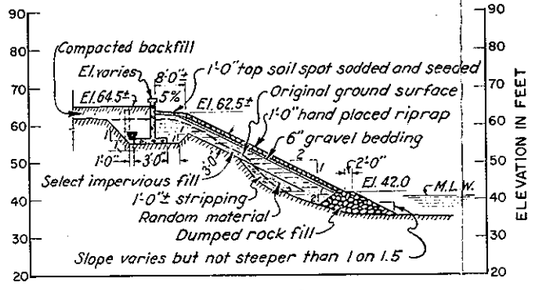

SECTION C/2

SCALE 1" = 20'

NOTES:

Elevations refer to Mean Sea Level Datum.

CONNECTICUT RIVER FLOOD CONTROL

BRIDGE STREET PUMPING STATION

WEST SPRINGFIELD, MASS.

GENERAL PLAN

CONNECTICUT RIVER — MASSACHUSETTS

SCALE 1 IN. = 20 FT.

U.S. ENGINEER OFFICE, PROVIDENCE, R.I., JAN. 1941

OPERATION AND MAINTENANCE MANUAL

WEST SPRINGFIELD, MASS.

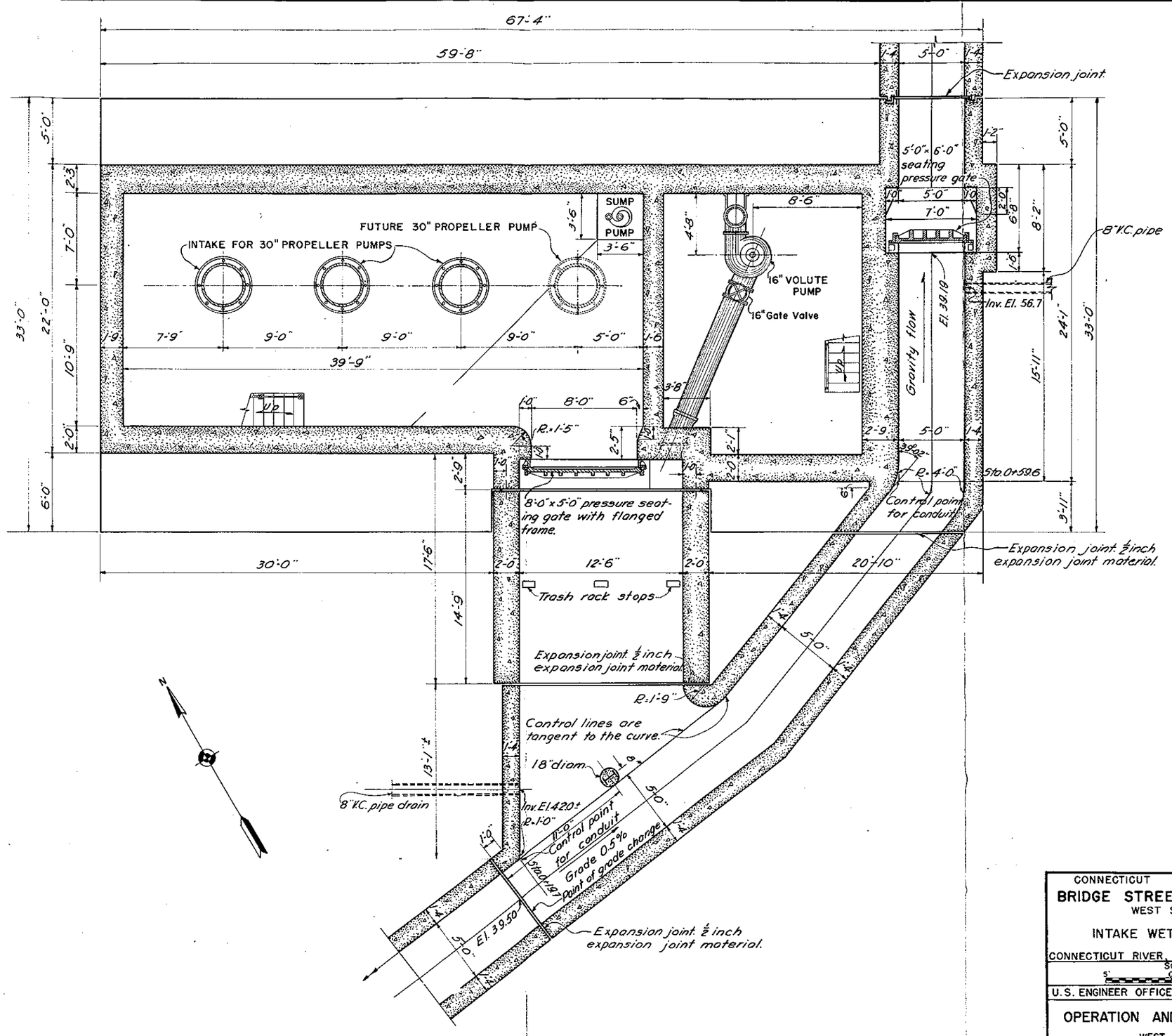

CONNECTICUT RIVER FLOOD CONTROL

BRIDGE STREET PUMPING STATION

WEST SPRINGFIELD, MASS.

INTAKE WET WELL AND OUTLET

CONNECTICUT RIVER, MASSACHUSETTS

SCALE: 1/4 IN. = 1 FT.

U.S. ENGINEER OFFICE, PROVIDENCE, R.I., JAN. 1941

OPERATION AND MAINTENANCE MANUAL

WEST SPRINGFIELD, MASS.

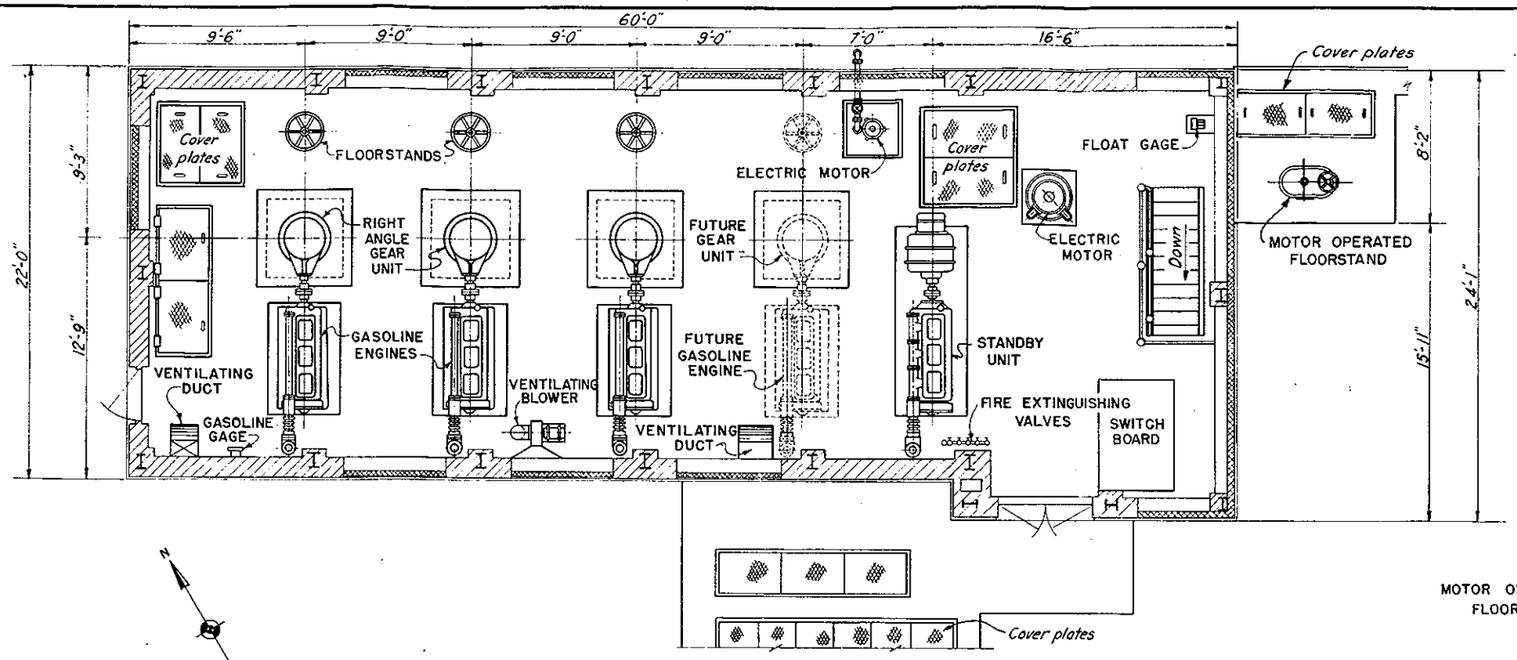

ENGINE ROOM PLAN

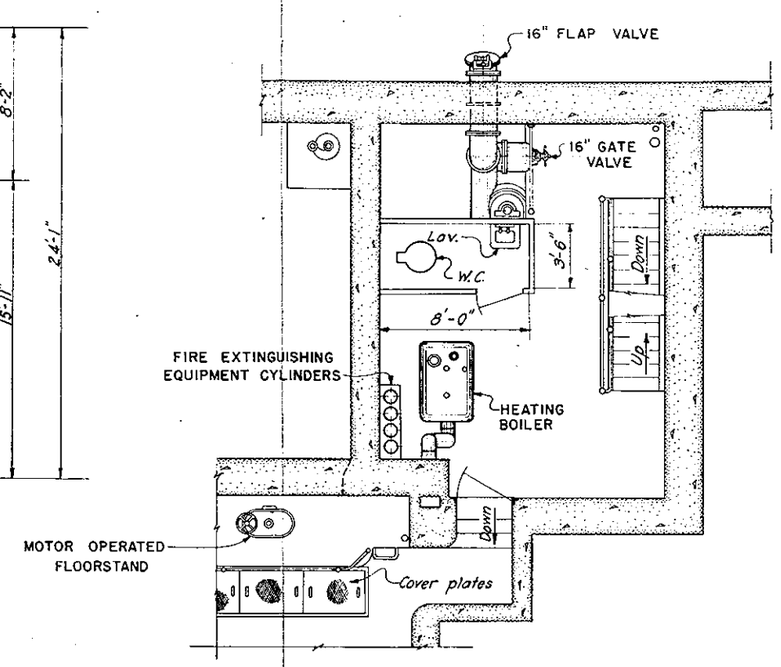

BOILER ROOM PLAN

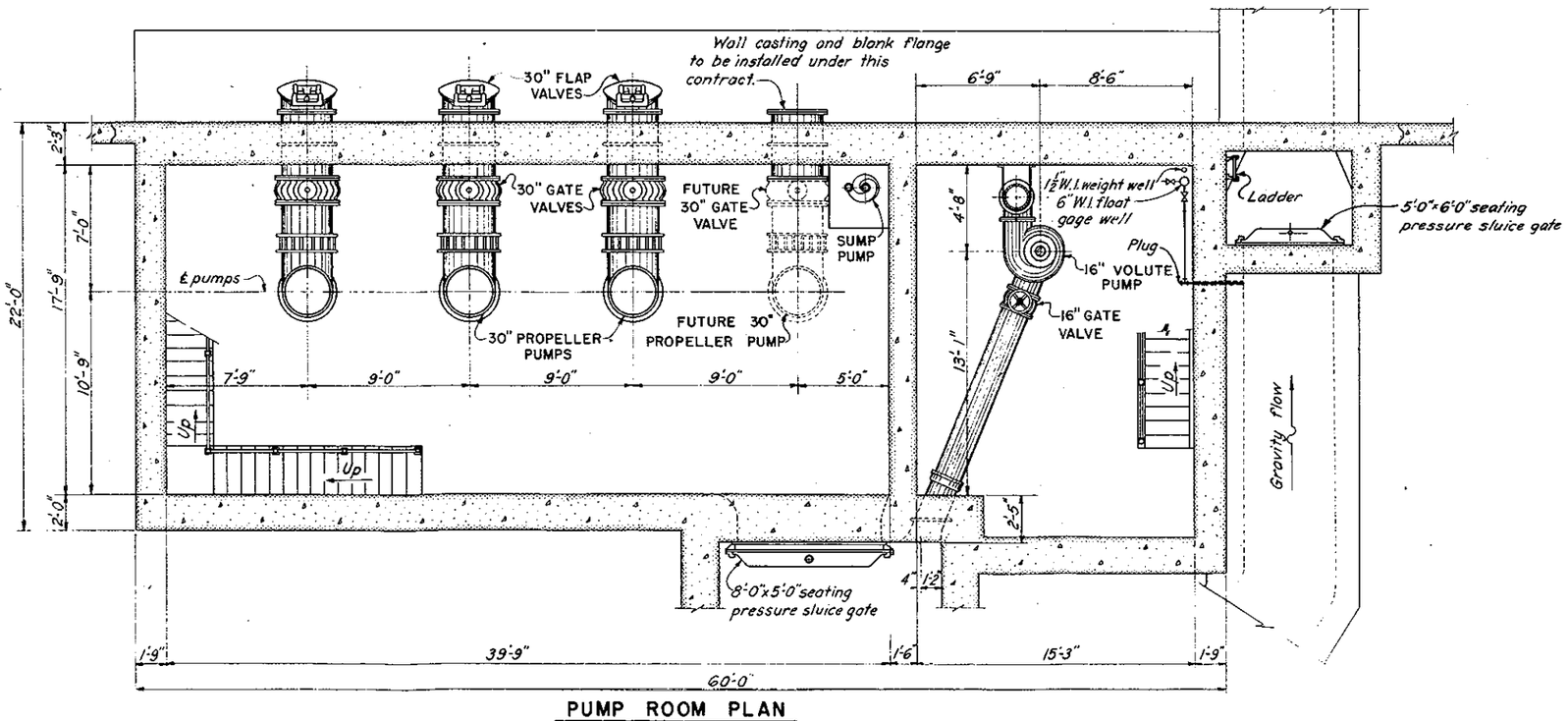

PUMP ROOM PLAN

CONNECTICUT RIVER FLOOD CONTROL

BRIDGE STREET PUMPING STATION

WEST SPRINGFIELD, MASS.

GENERAL ARRANGEMENT OF EQUIPMENT NO. 1

CONNECTICUT RIVER — MASSACHUSETTS

SCALE: 1/4 IN. = 1 FT.

U. S. ENGINEER OFFICE, PROVIDENCE, R.I., JAN. 1941

OPERATION AND MAINTENANCE MANUAL

WEST SPRINGFIELD, MASS.

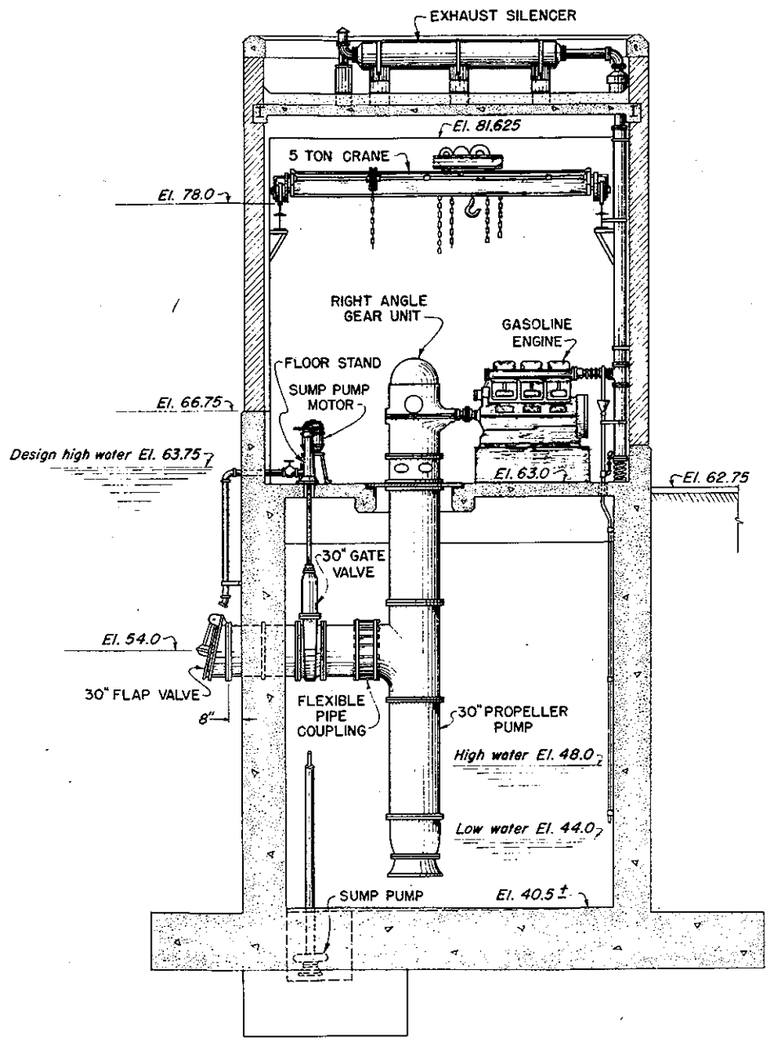

SECTION

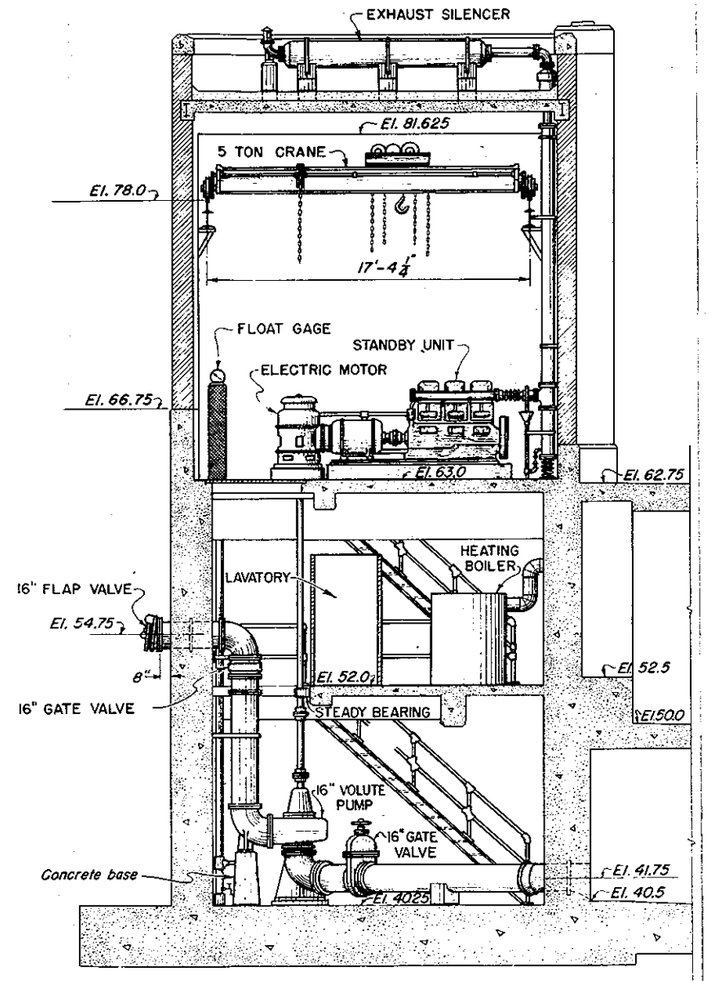

SECTION

CONNECTICUT RIVER FLOOD CONTROL

BRIDGE STREET PUMPING STATION

WEST SPRINGFIELD, MASS.

GENERAL ARRANGEMENT OF EQUIPMENT NO. 2

CONNECTICUT RIVER MASSACHUSETTS

FEETS SCALE 1/4 IN. = 1 FT.

U.S. ENGINEER OFFICE, PROVIDENCE, R.I., JAN. 1941

OPERATION AND MAINTENANCE MANUAL

WEST SPRINGFIELD, MASS.

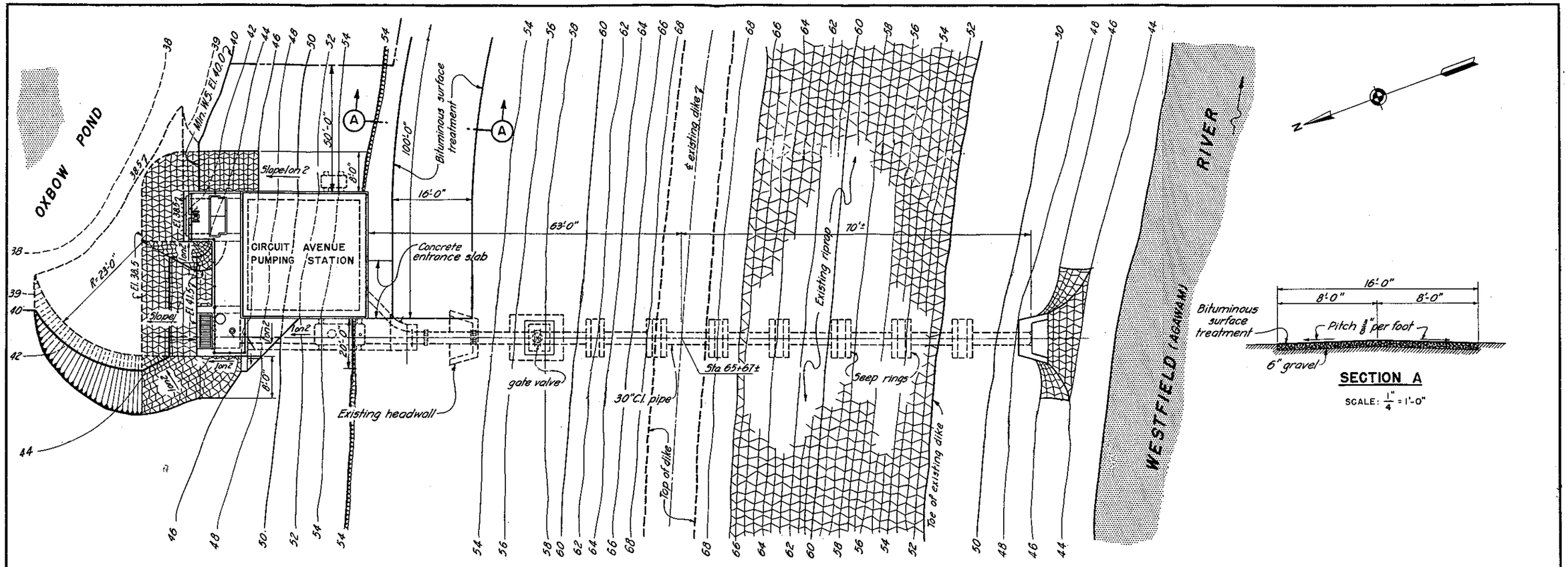

PLAN

SCALE: 1" = 10'

NOTES

Elevations refer to Mean Sea Level Datum.
Minimum and maximum water surface elevations shown for the Oxbow Pond are those for future operation of the Circuit Avenue Pumping Station.

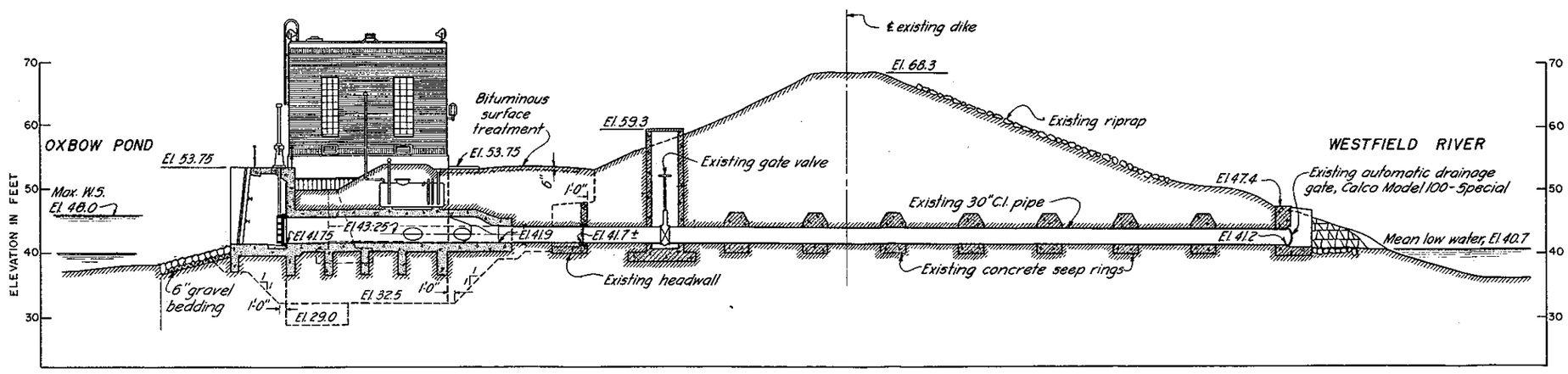

PROFILE ON ℄ CONDUIT

SCALE: 1" = 10'

CONNECTICUT RIVER FLOOD CONTROL

CIRCUIT AVENUE PUMPING STATION

WEST SPRINGFIELD, MASS.

GENERAL PLAN

CONNECTICUT RIVER, MASSACHUSETTS

SCALE: 1 IN. = 10 FT.

U.S. ENGINEER OFFICE, PROVIDENCE, R.I., OCT. 1940

OPERATION AND MAINTENANCE MANUAL

WEST SPRINGFIELD, MASS.

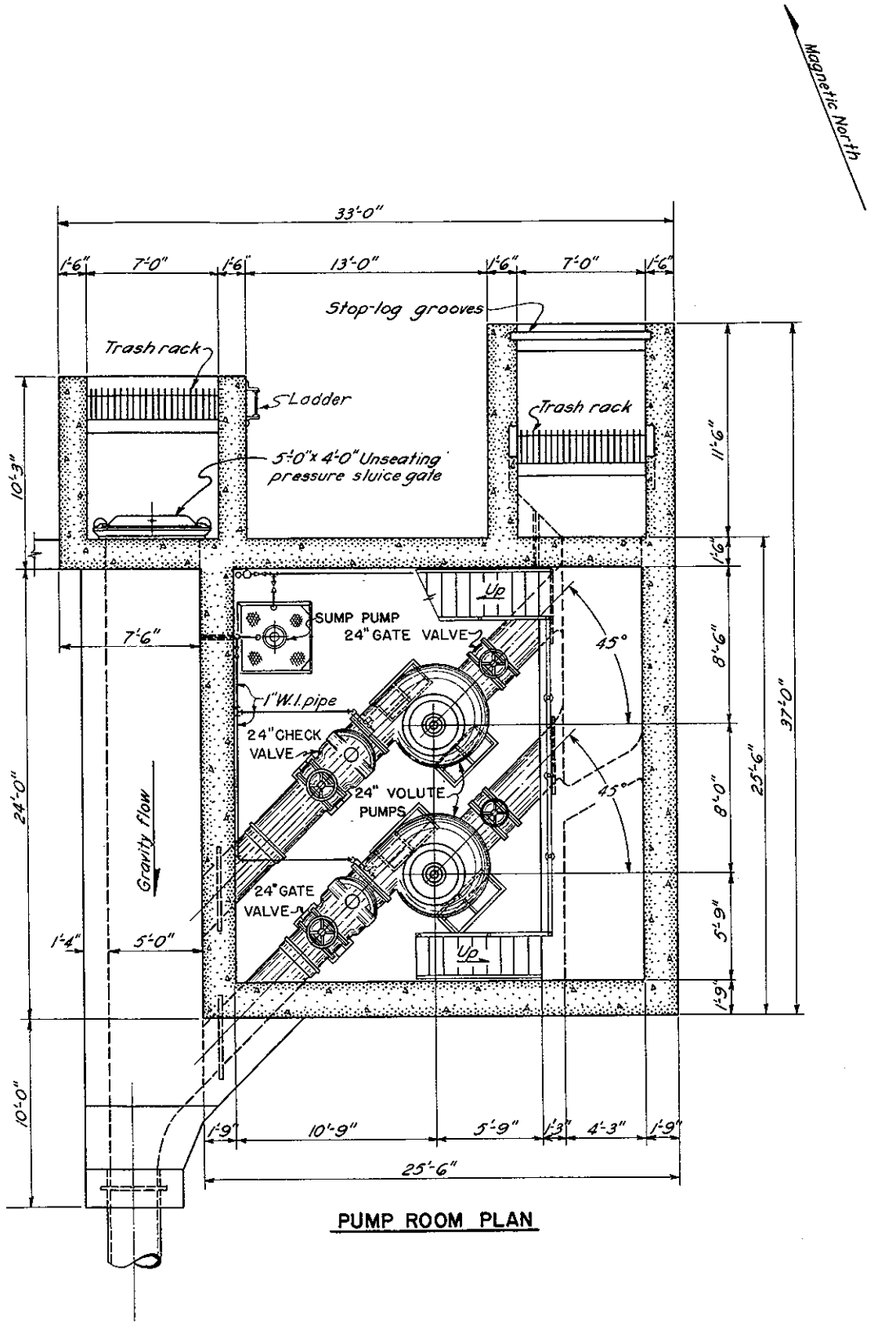

PUMP ROOM PLAN

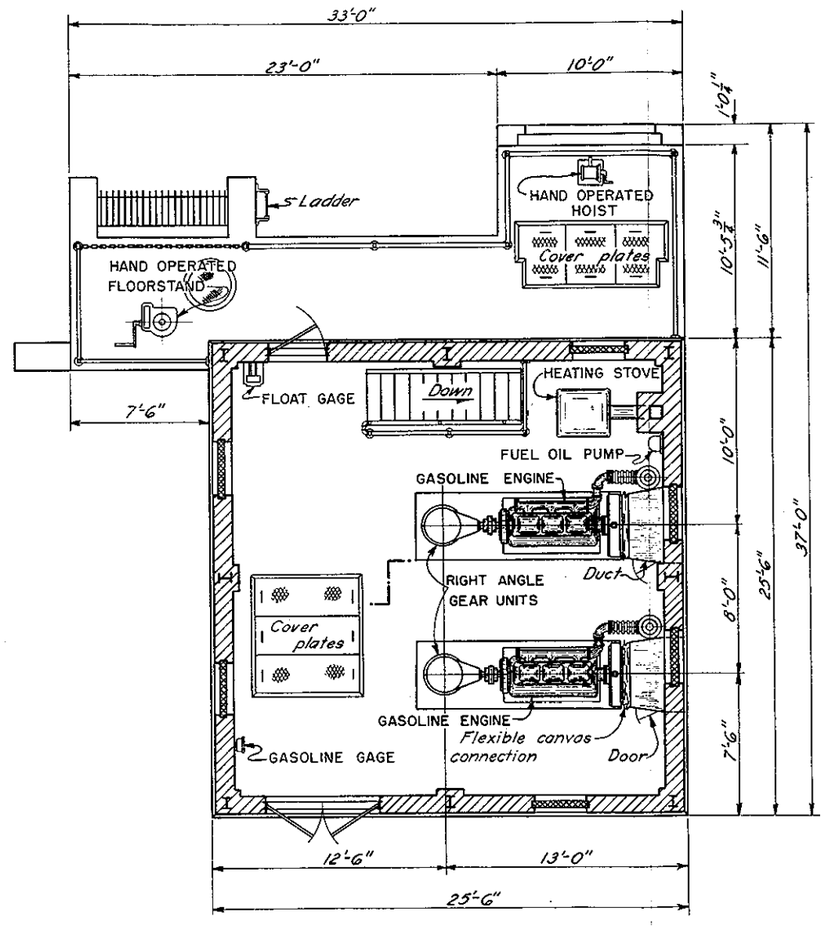

ENGINE ROOM PLAN

CONNECTICUT RIVER FLOOD CONTROL

CIRCUIT AVENUE PUMPING STATION

WEST SPRINGFIELD, MASS.

GENERAL ARRANGEMENT OF EQUIPMENT

CONNECTICUT RIVER — MASSACHUSETTS

SCALE: 1/4 IN. = 1 FT.

5' 0 5' 10'

U.S. ENGINEER OFFICE, PROVIDENCE, R.I., OCT. 1940

OPERATION AND MAINTENANCE MANUAL

WEST SPRINGFIELD, MASS.

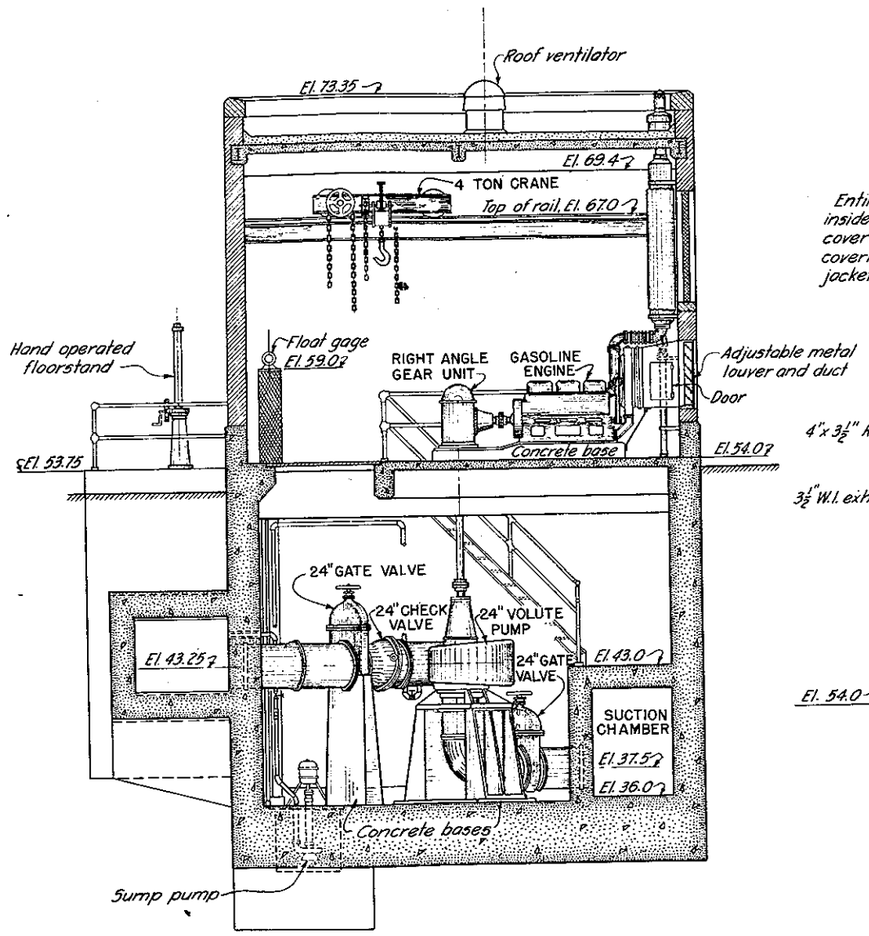

SECTION

SCALE: $\frac{1}{4}$" = 1'-0"

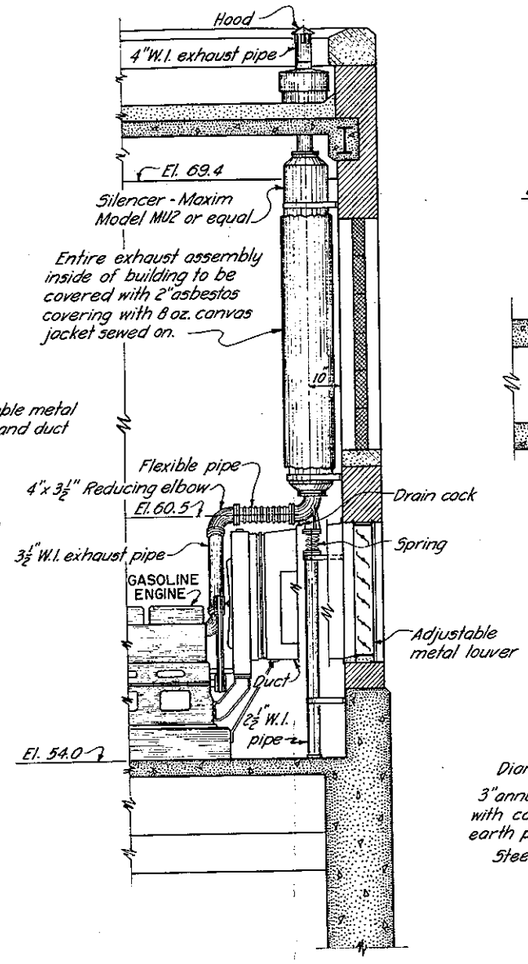

DETAIL OF GASOLINE ENGINE EXHAUST

SCALE: $\frac{1}{2}$" = 1'-0"

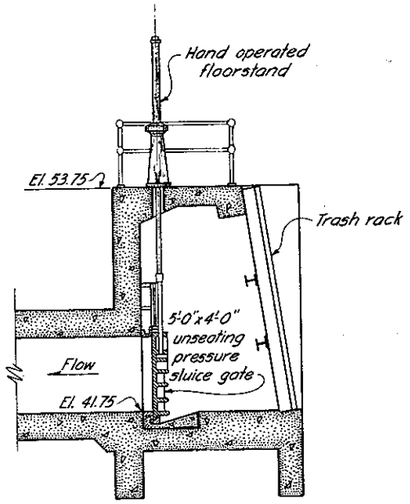

SECTION

SCALE: $\frac{1}{4}$" = 1'-0"

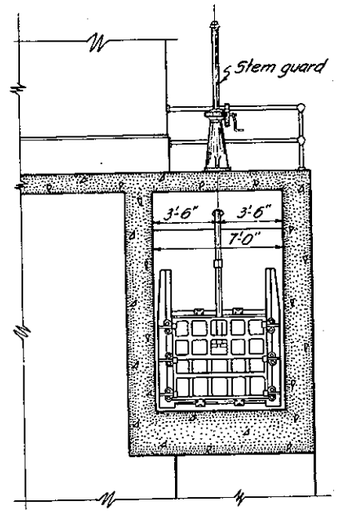

SECTION

SCALE: $\frac{1}{4}$" = 1'-0"

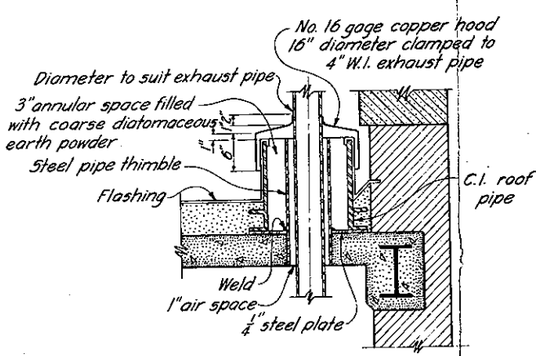

DETAIL OF ENGINE EXHAUST AT ROOF

SCALE: 1" = 1'-0"

CONNECTICUT RIVER FLOOD CONTROL

CIRCUIT AVENUE PUMPING STATION

WEST SPRINGFIELD, MASS.

MISCELLANEOUS DETAILS

CONNECTICUT RIVER, MASSACHUSETTS

SCALE: 1/4 IN = 1 FT.

U.S. ENGINEER OFFICE, PROVIDENCE, R.I., OCT. 1940

OPERATION AND MAINTENANCE MANUAL

WEST SPRINGFIELD, MASS.

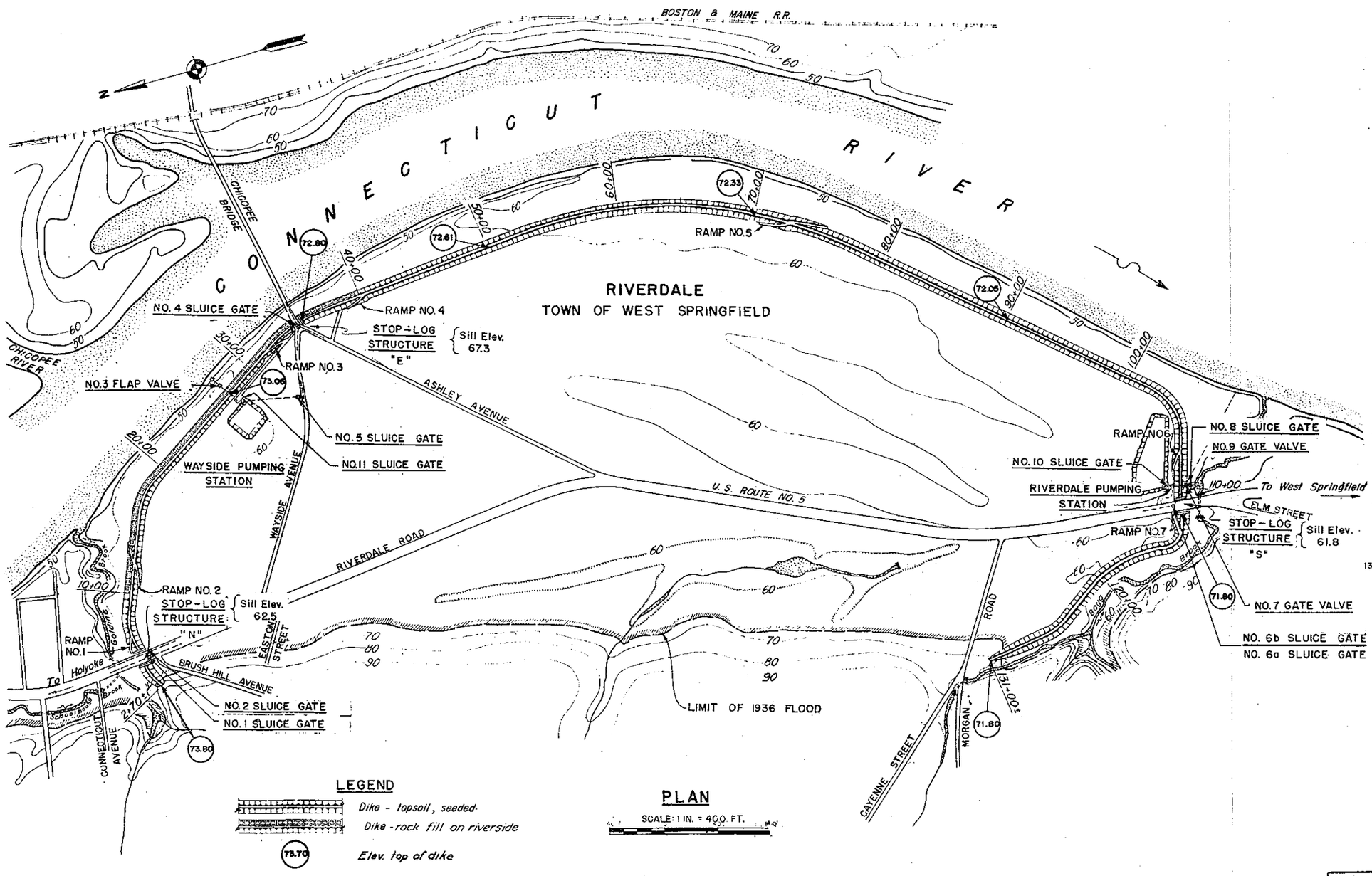

NOTE

Elevations refer to river level recorders at the pumping stations as noted and are based on Mean Sea Level datum.

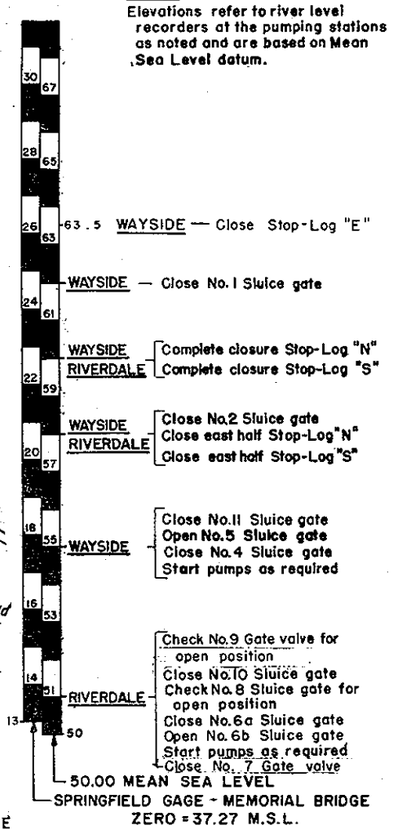

MEAN SEA LEVEL ELEVATIONS

As listed on M.S.L. graph above	Corresponding stages at Memorial Bridge & at Bridge St. Pump. Sta.
63.5 WAYSIDE	60.3
62.0 WAYSIDE	59.0
60.0 WAYSIDE	57.3
60.0 RIVERDALE	58.5
58.0 WAYSIDE	55.3
58.0 RIVERDALE	56.5
55.0 WAYSIDE	52.8
51.0 RIVERDALE	50.3

NOTE

The flood protection system, constructed by the Corps of Engineers for the Riverdale section of West Springfield, consists of an earth dike, three stop-log structures and two pumping stations.

Heights of previous major floods on Springfield Memorial Bridge Gage.

Nov. 1927	22.4
Mar. 1936	28.6
Sept. 1938	25.75

CONNECTICUT RIVER FLOOD CONTROL

RIVERDALE DIKE

WEST SPRINGFIELD, MASS.

GENERAL PLAN AND OPERATIONS CHART

CONNECTICUT RIVER, MASSACHUSETTS.

OPERATION AND MAINTENANCE MANUAL

PREPARED BY
CORPS OF ENGINEERS, U. S. ARMY.
OFFICE OF THE DIVISION ENGINEER
NEW ENGLAND DIVISION BOSTON, MASS.

DEC. 1950

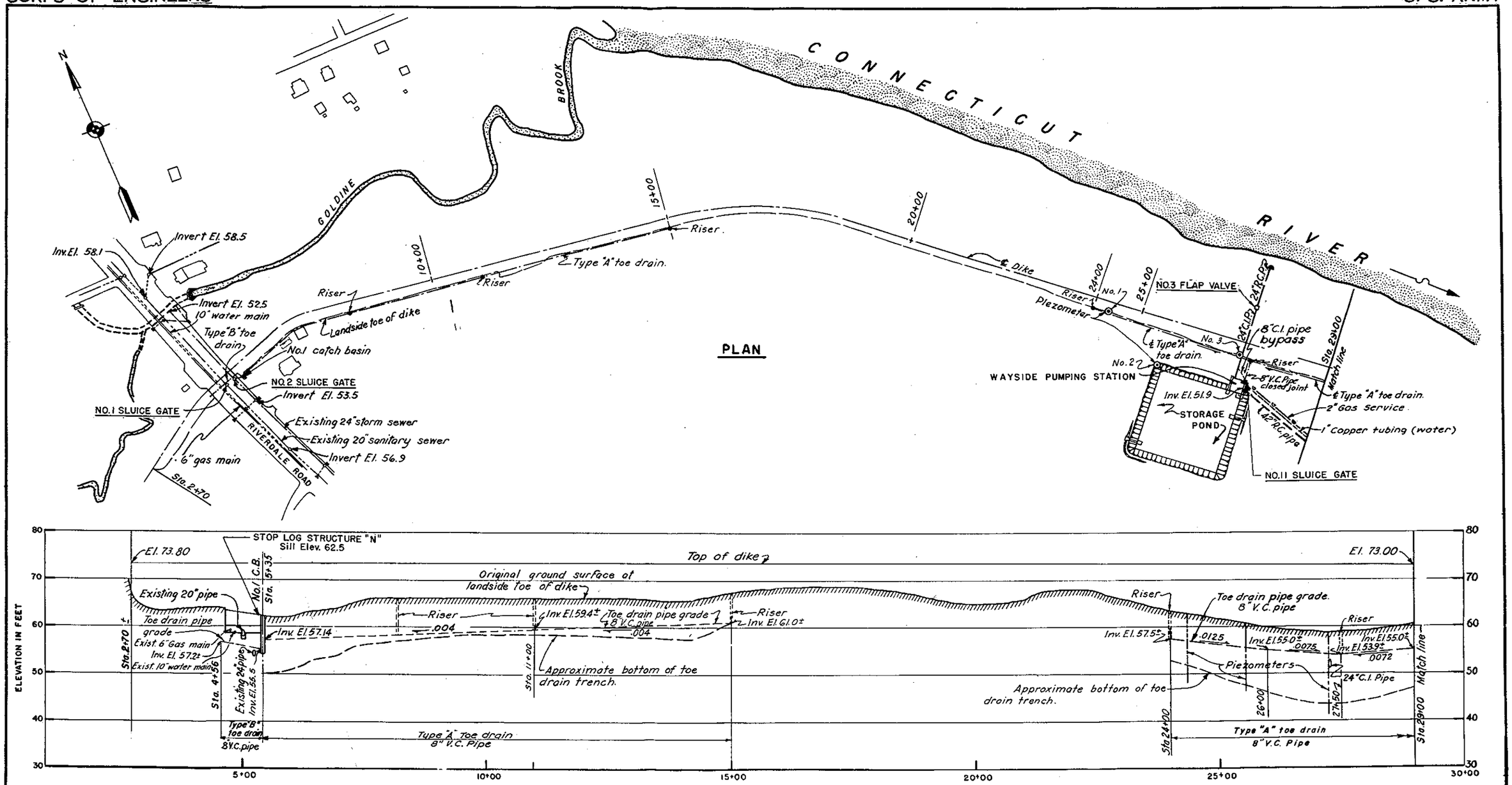

LEGEND

	PLAN	PROFILE
Piezometer	⊙	
Existing manhole	○	
Proposed manhole	•	
Proposed catch-basin	⊠	
Riser	•	

PROFILE

SCALE: HOR. 1"=100'
VERT. 1"=10'

CONNECTICUT RIVER FLOOD CONTROL

RIVERDALE DIKE

WEST SPRINGFIELD, MASS.

DRAINAGE SYSTEM

PLAN AND PROFILE NO. 1

CONNECTICUT RIVER MASSACHUSETTS

OPERATION AND MAINTENANCE MANUAL

PREPARED BY
CORPS OF ENGINEERS, U. S. ARMY.
OFFICE OF THE DIVISION ENGINEER
NEW ENGLAND DIVISION BOSTON, MASS.

DEC. 1950

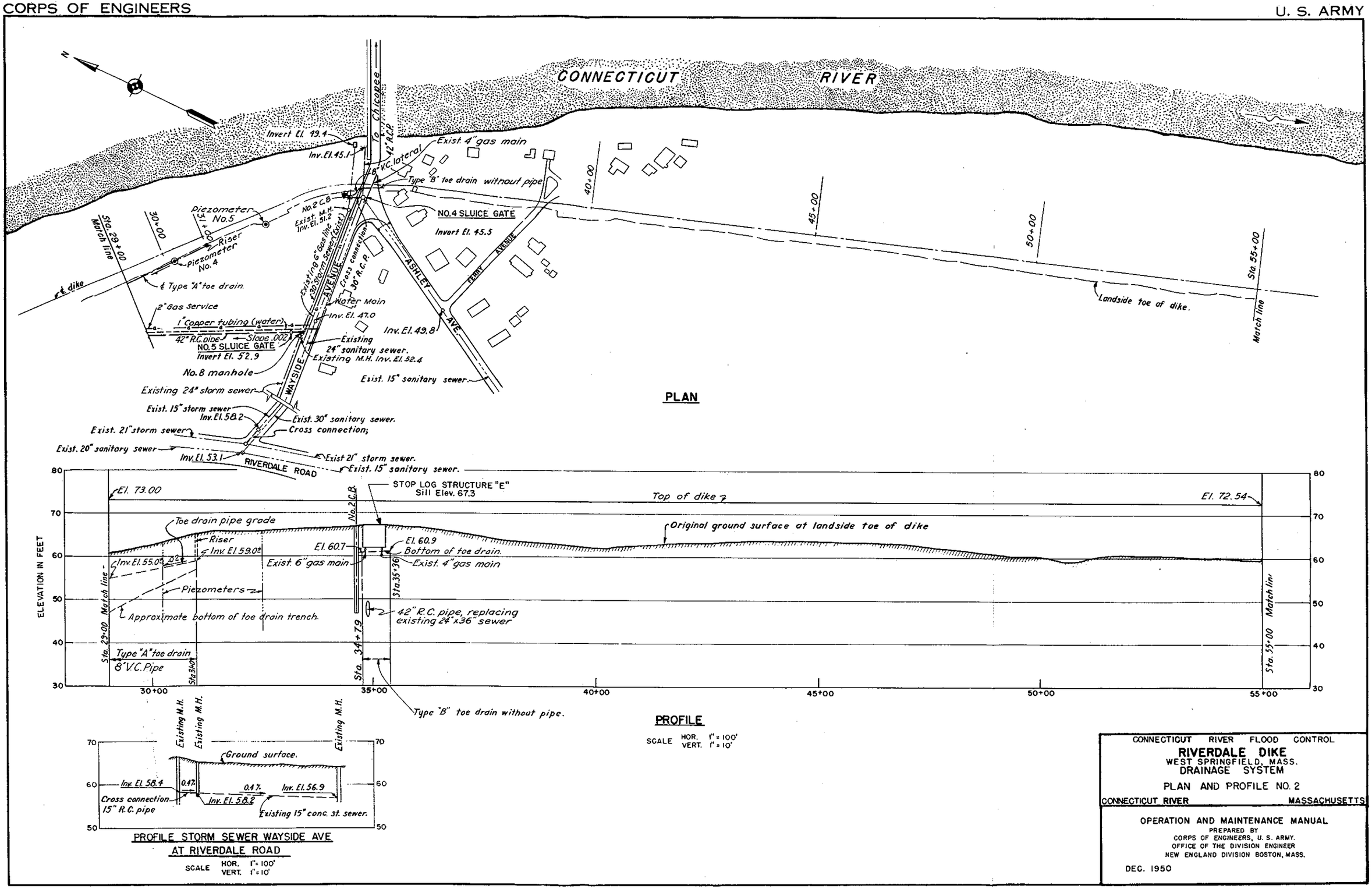

CONNECTICUT RIVER FLOOD CONTROL

RIVERDALE DIKE

WEST SPRINGFIELD, MASS.

DRAINAGE SYSTEM

PLAN AND PROFILE NO. 2

CONNECTICUT RIVER MASSACHUSETTS

OPERATION AND MAINTENANCE MANUAL

PREPARED BY
CORPS OF ENGINEERS, U. S. ARMY.
OFFICE OF THE DIVISION ENGINEER
NEW ENGLAND DIVISION BOSTON, MASS.

DEC. 1950

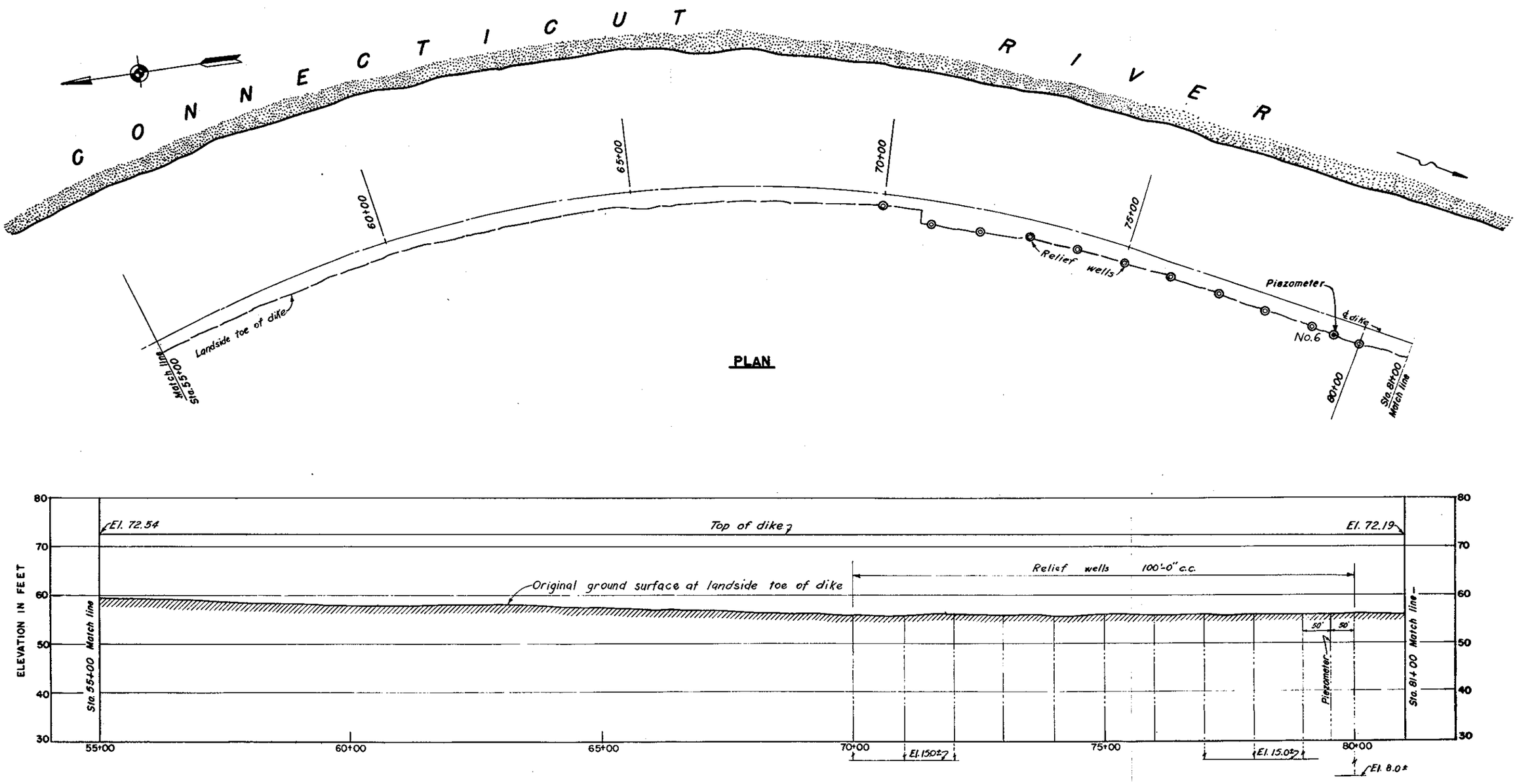

PROFILE

SCALE: HOR. 1" = 100' VERT. 1" = 10'

LEGEND	PLAN	PROFILE
Relief wells	◎	
Piezometer	◉	

CONNECTICUT RIVER FLOOD CONTROL

RIVERDALE DIKE

WEST SPRINGFIELD, MASS.

DRAINAGE SYSTEM

PLAN AND PROFILE NO. 3

CONNECTICUT RIVER MASSACHUSETTS

OPERATION AND MAINTENANCE MANUAL

PREPARED BY
CORPS OF ENGINEERS, U. S. ARMY.
OFFICE OF THE DIVISION ENGINEER
NEW ENGLAND DIVISION BOSTON, MASS.

DEC. 1950

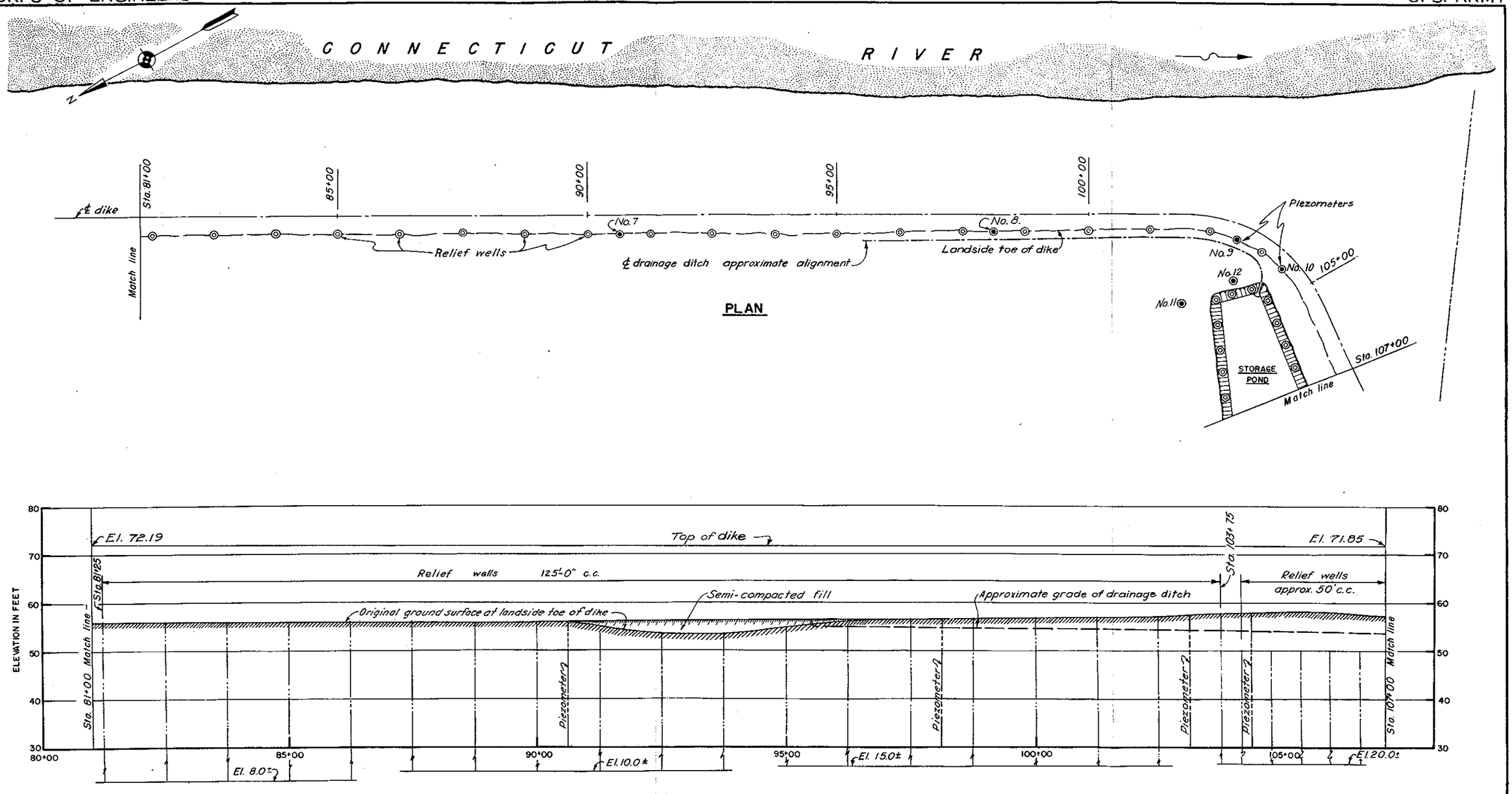

CONNECTICUT RIVER FLOOD CONTROL

RIVERDALE DIKE

WEST SPRINGFIELD, MASS.

DRAINAGE SYSTEM

PLAN AND PROFILE NO. 4

CONNECTICUT RIVER MASSACHUSETTS

OPERATION AND MAINTENANCE MANUAL

PREPARED BY
CORPS OF ENGINEERS, U. S. ARMY.
OFFICE OF THE DIVISION ENGINEER
NEW ENGLAND DIVISION BOSTON, MASS.

DEC. 1950

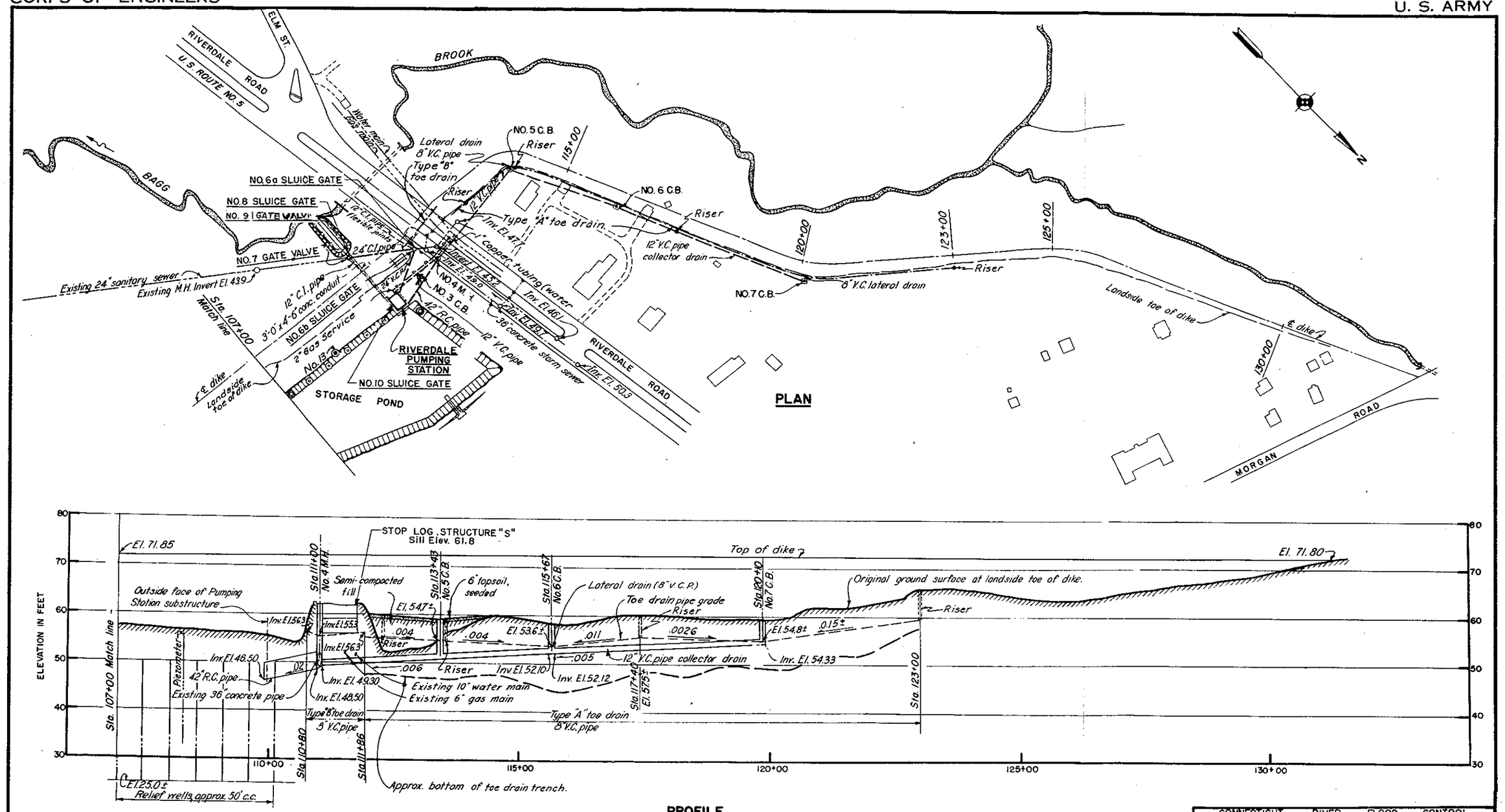

PROFILE

SCALE: HOR. 1" = 100'
VERT. 1" = 10'

CONNECTICUT RIVER FLOOD CONTROL

RIVERDALE DIKE

WEST SPRINGFIELD, MASS.

DRAINAGE SYSTEM

PLAN AND PROFILE NO. 5

CONNECTICUT RIVER MASSACHUSETTS

OPERATION AND MAINTENANCE MANUAL

PREPARED BY
CORPS OF ENGINEERS, U. S. ARMY.
OFFICE OF THE DIVISION ENGINEER
NEW ENGLAND DIVISION BOSTON, MASS.

DEC. 1950

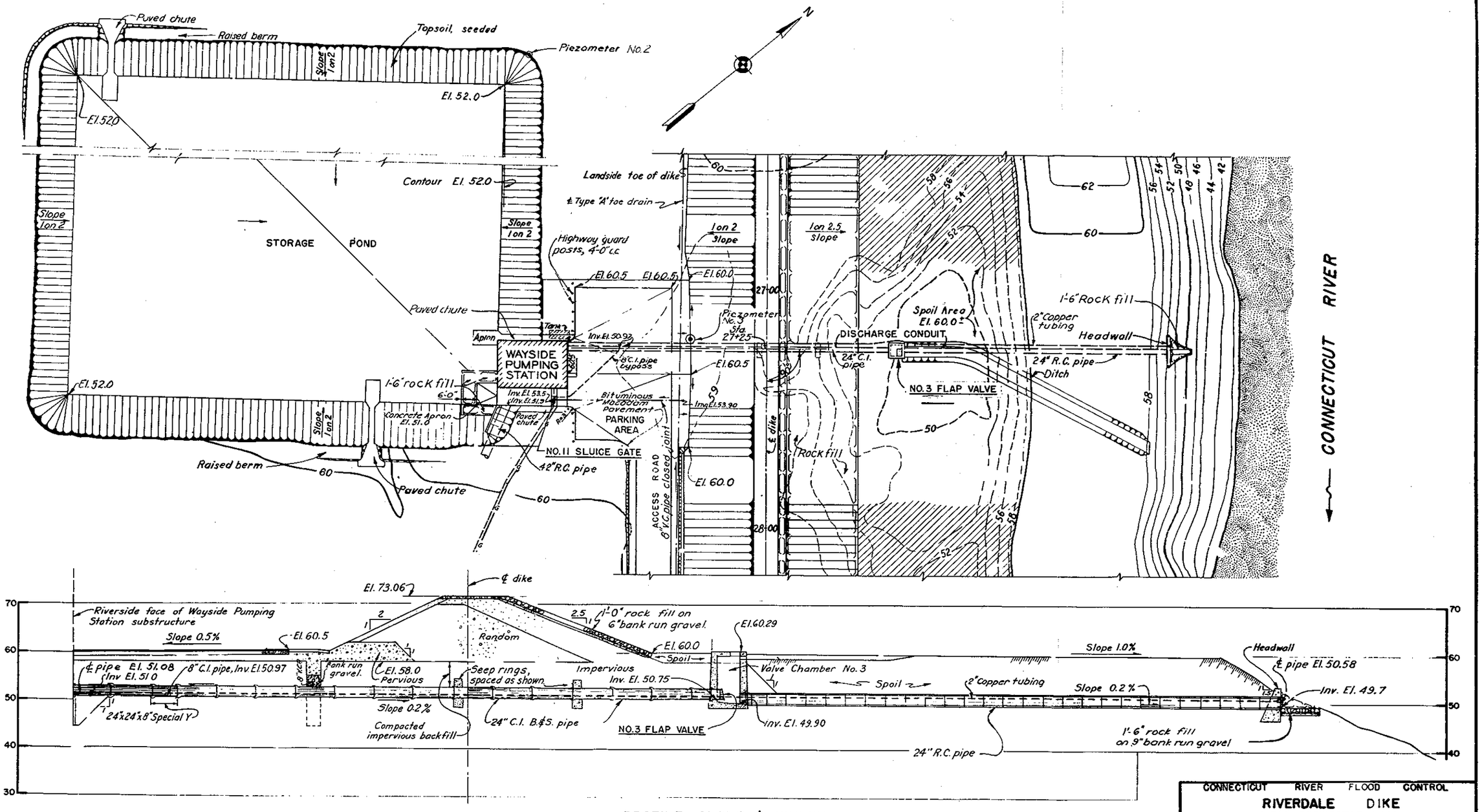

PROFILE ALONG ℄ CONDUIT

CONNECTICUT RIVER FLOOD CONTROL

RIVERDALE DIKE

WEST SPRINGFIELD, MASS.

GENERAL PLAN

WAYSIDE PUMPING STATION

CONNECTICUT RIVER MASSACHUSETTS

OPERATION AND MAINTENANCE MANUAL

PREPARED BY
CORPS OF ENGINEERS, U. S. ARMY.
OFFICE OF THE DIVISION ENGINEER
NEW ENGLAND DIVISION BOSTON, MASS.

DEC. 1950

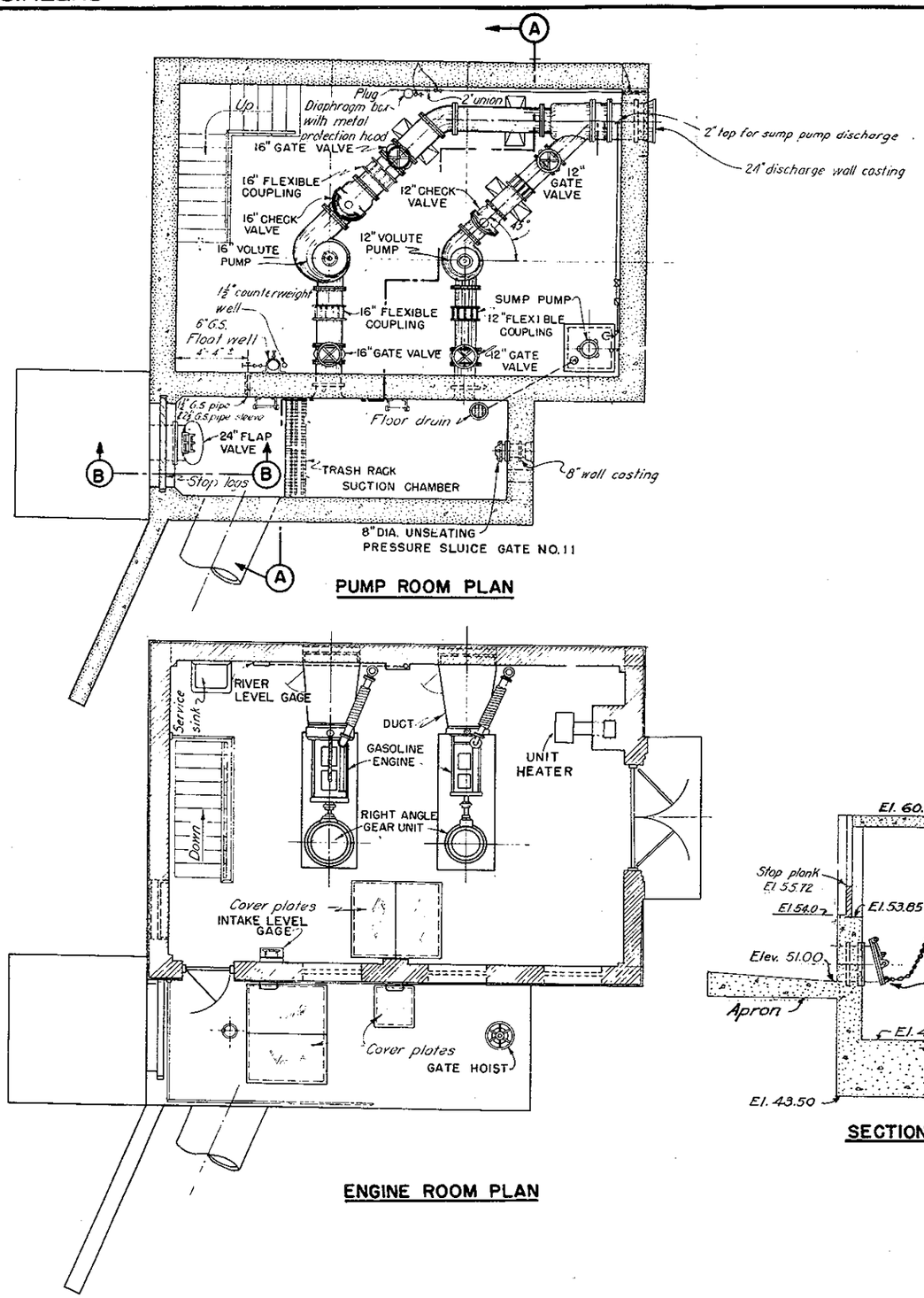

PUMP ROOM PLAN

ENGINE ROOM PLAN

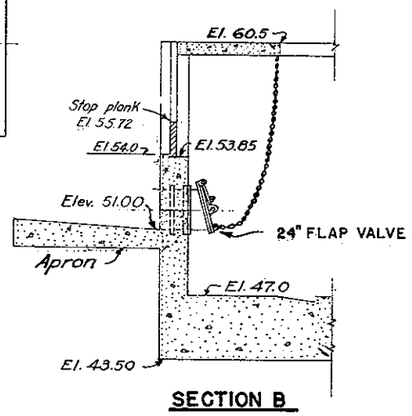

SECTION B

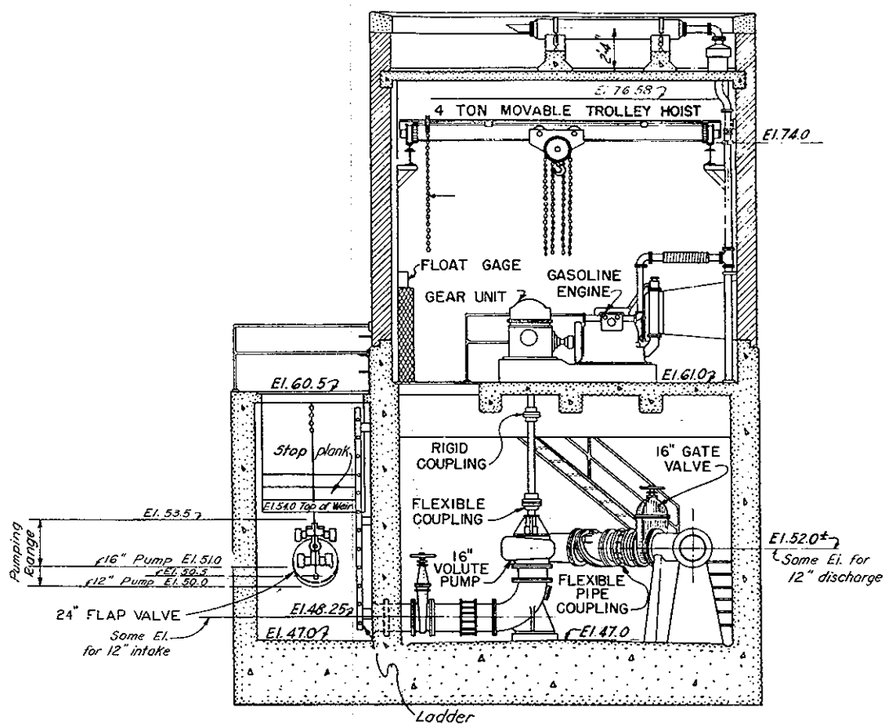

SECTION A

NOTE:-
Stop planks to be left in place on weir at all times

SCALE $\frac{1}{4}$" = 1'-0"
4' 0 4' 8'

CONNECTICUT RIVER FLOOD CONTROL

WAYSIDE PUMPING STATION

WEST SPRINGFIELD, MASS.

GENERAL ARRANGEMENT OF EQUIPMENT

CONNECTICUT RIVER MASSACHUSETTS

OPERATION AND MAINTENANCE MANUAL

PREPARED BY
CORPS OF ENGINEERS, U. S. ARMY.
OFFICE OF THE DIVISION ENGINEER
NEW ENGLAND DIVISION BOSTON, MASS.

DEC. 1950

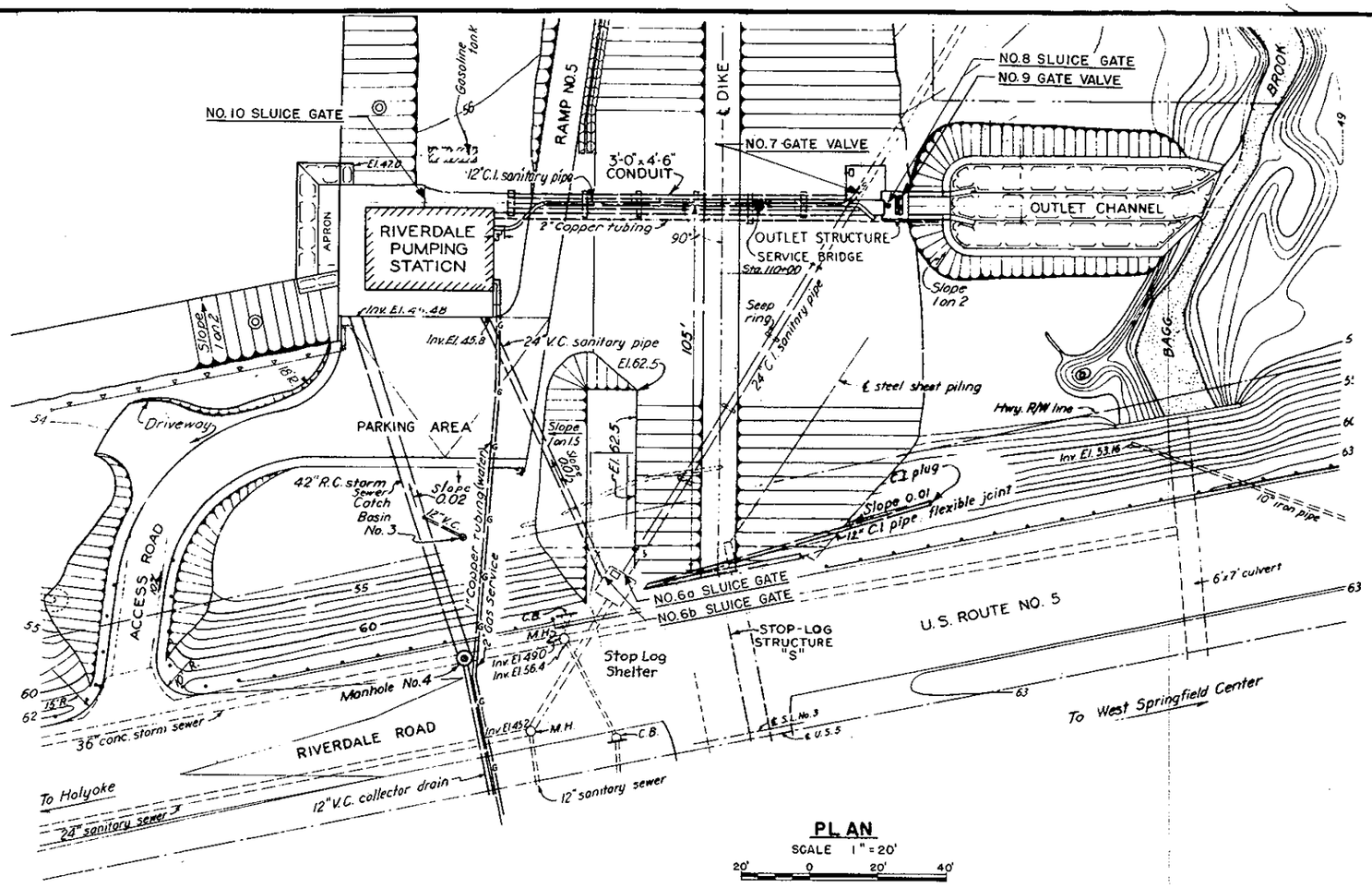

PLAN

SCALE 1" = 20'

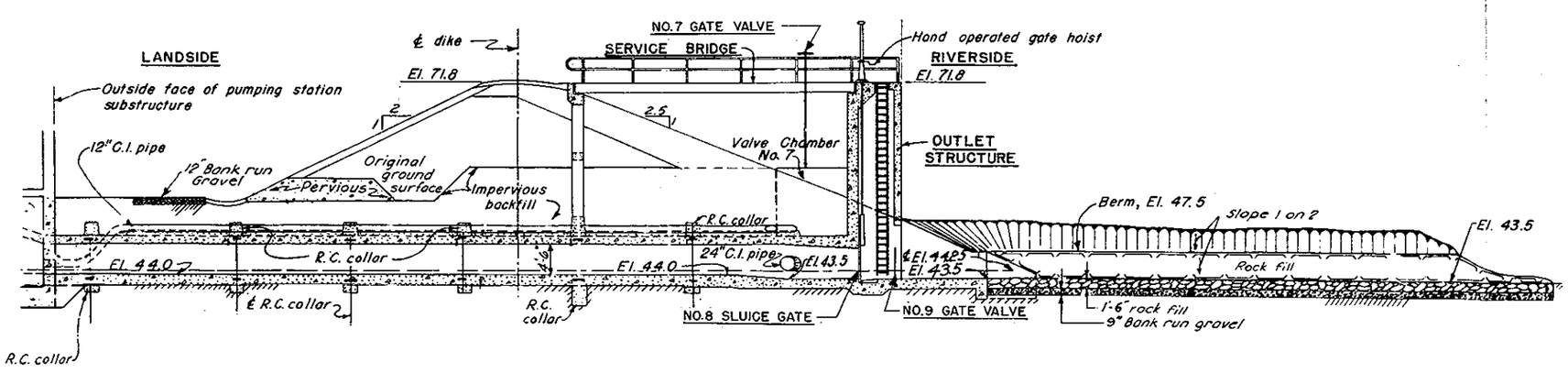

SECTION ON ℄ CONDUIT AND OUTLET CHANNEL

SCALE 1" = 10'

CONNECTICUT RIVER FLOOD CONTROL

RIVERDALE DIKE

WEST SPRINGFIELD, MASS.

GENERAL PLAN

RIVERDALE PUMPING STATION

CONNECTICUT RIVER MASSACHUSETTS

OPERATION AND MAINTENANCE MANUAL

PREPARED BY
CORPS OF ENGINEERS, U. S. ARMY.
OFFICE OF THE DIVISION ENGINEER
NEW ENGLAND DIVISION BOSTON, MASS.

DEC. 1950

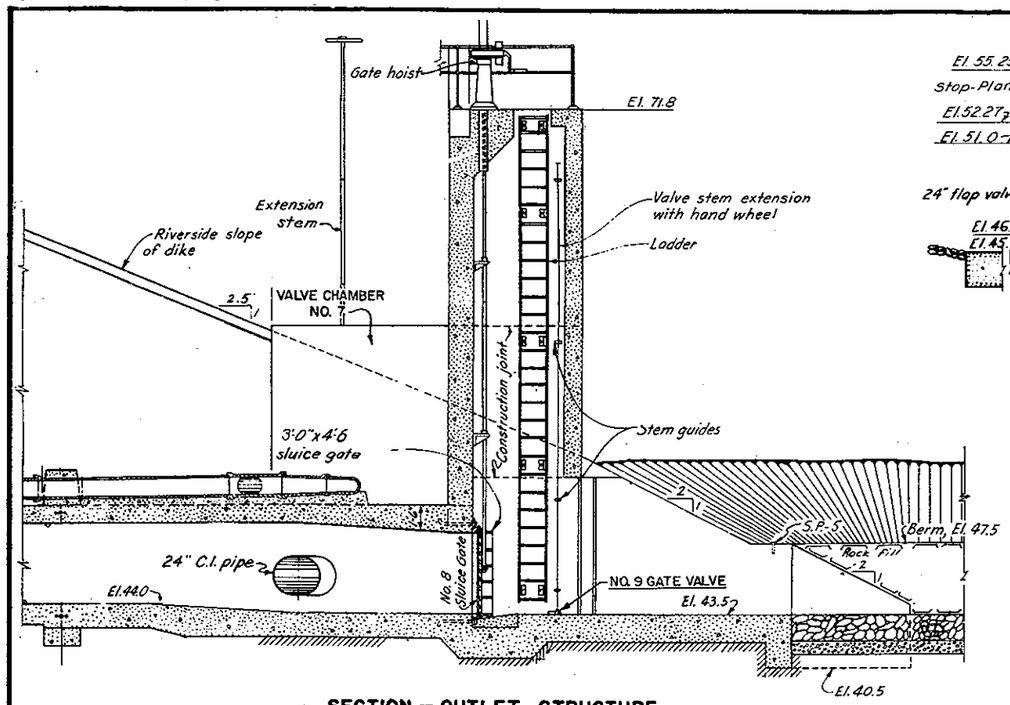

SECTION — OUTLET STRUCTURE

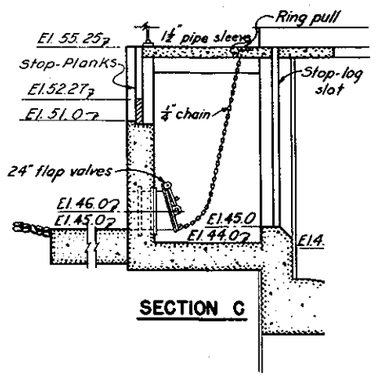

SECTION C

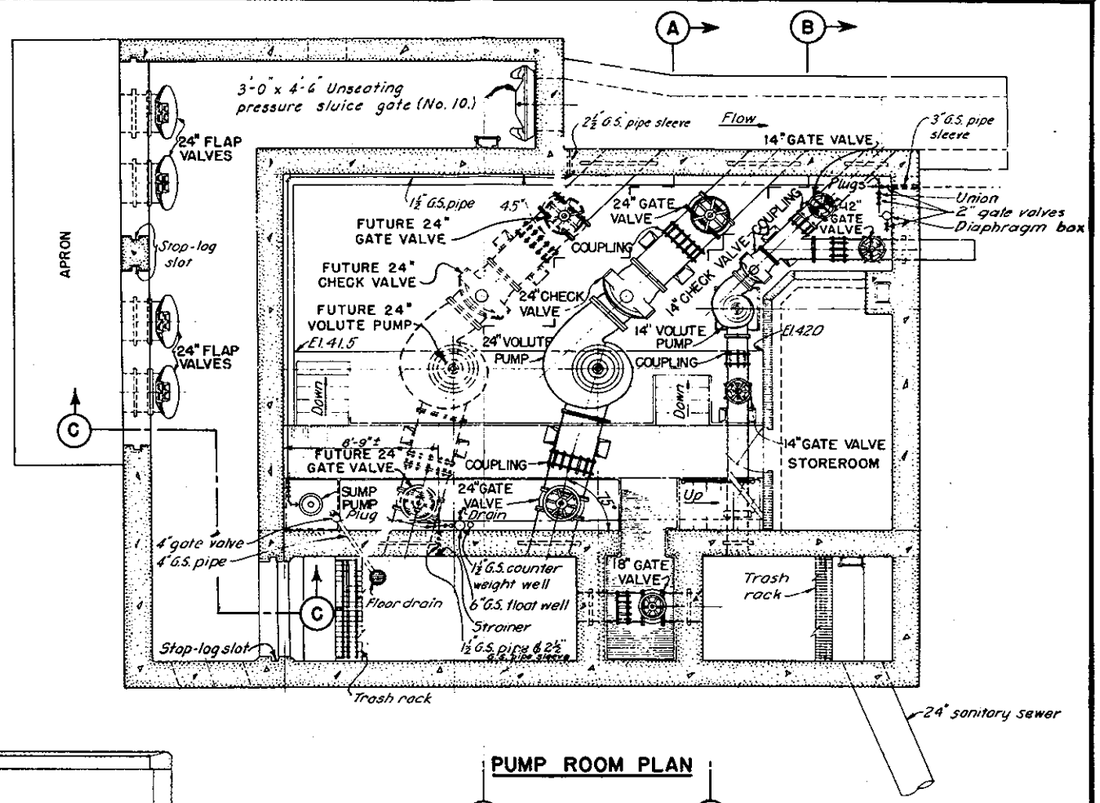

PUMP ROOM PLAN

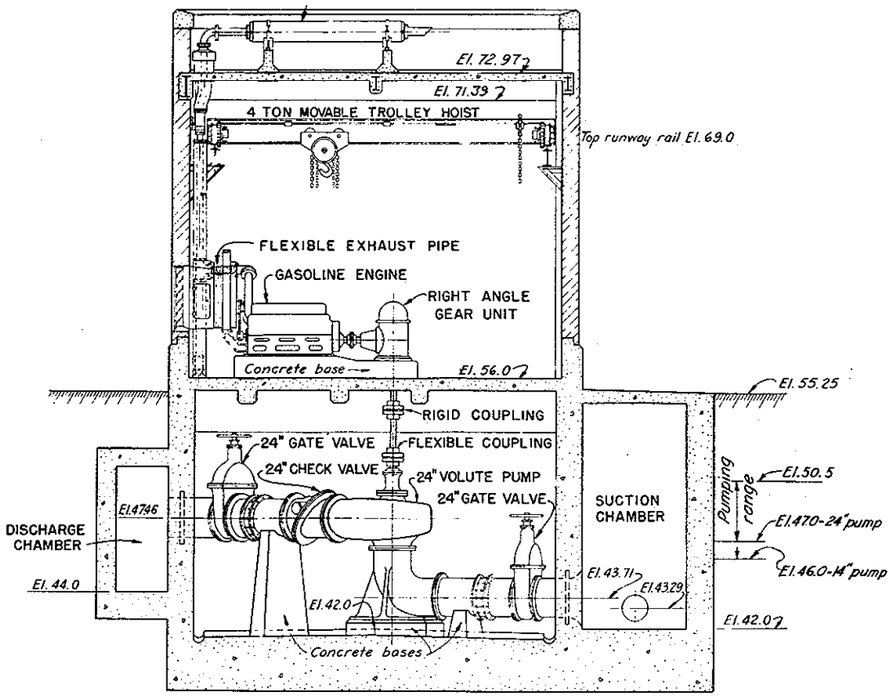

SECTION A

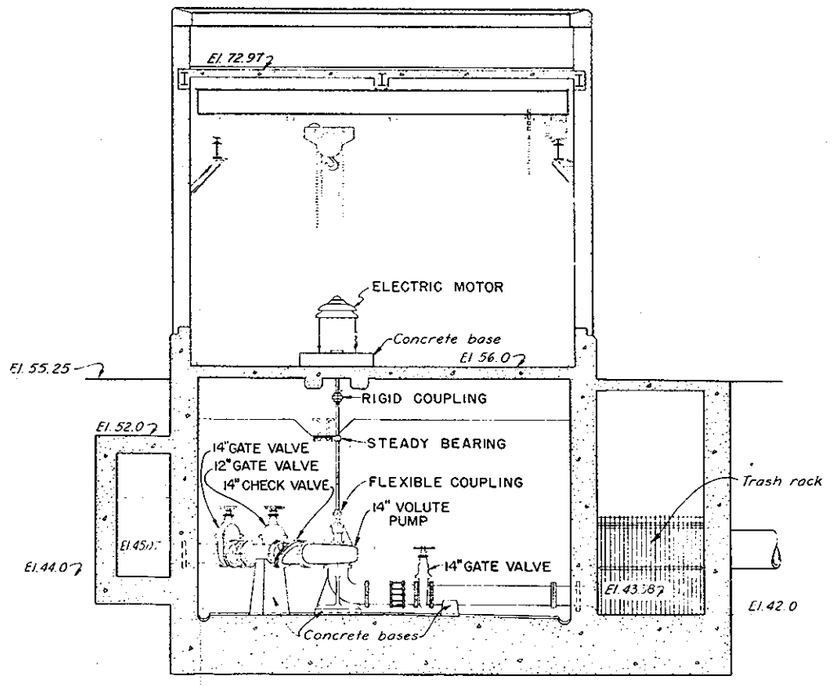

SECTION B

NOTE:-

Stop planks to be left in place on weir at all times.

SCALE $\frac{1}{4}$" = 1'-0"

CONNECTICUT RIVER FLOOD CONTROL

RIVERDALE PUMPING STATION

WEST SPRINGFIELD, MASS.

GENERAL ARRANGEMENT OF EQUIPMENT

CONNECTICUT RIVER MASSACHUSETTS

OPERATION AND MAINTENANCE MANUAL

PREPARED BY
CORPS OF ENGINEERS, U. S. ARMY.
OFFICE OF THE DIVISION ENGINEER
NEW ENGLAND DIVISION BOSTON, MASS.

DEC. 1950

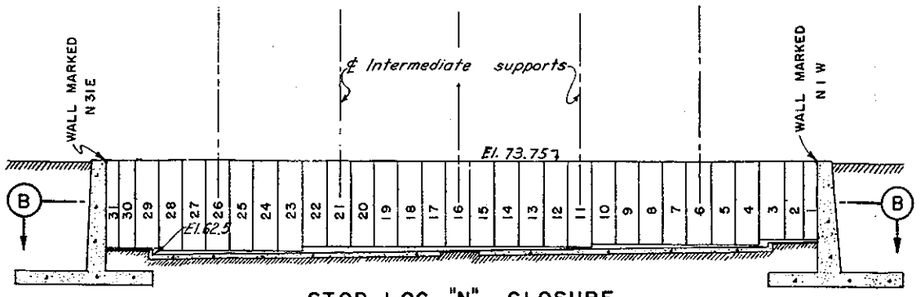

STOP LOG "N" CLOSURE
RIVERSIDE ELEVATION
SCALE 1/8" = 1'-0"

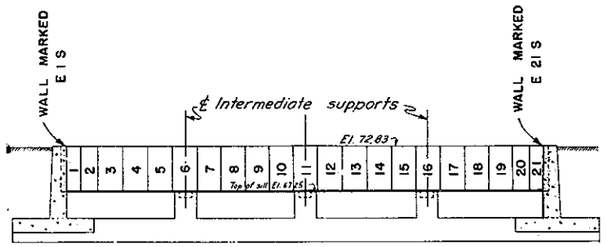

RIVERSIDE ELEVATION
STOP LOG "E" CLOSURE
SCALE 1/8" = 1'-0"

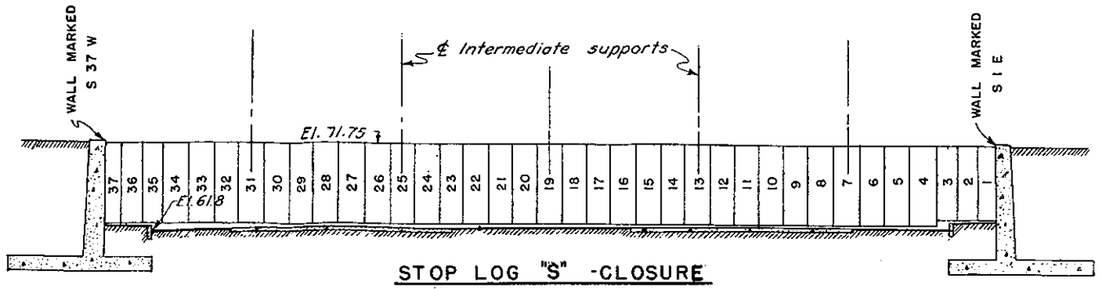

STOP LOG "S" -CLOSURE
RIVERSIDE ELEVATION
SCALE 1/8" = 1'-0"

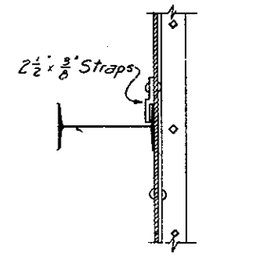

SECTION—A
SCALE: 1½" = 1'-0"

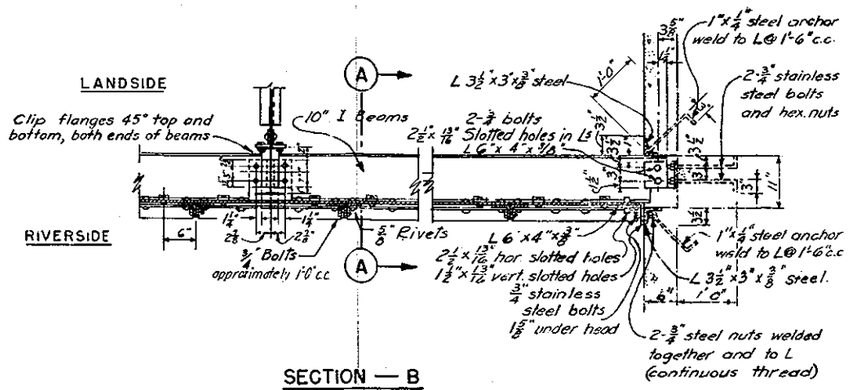

SECTION — B
SCALE ¾" = 1'-0"

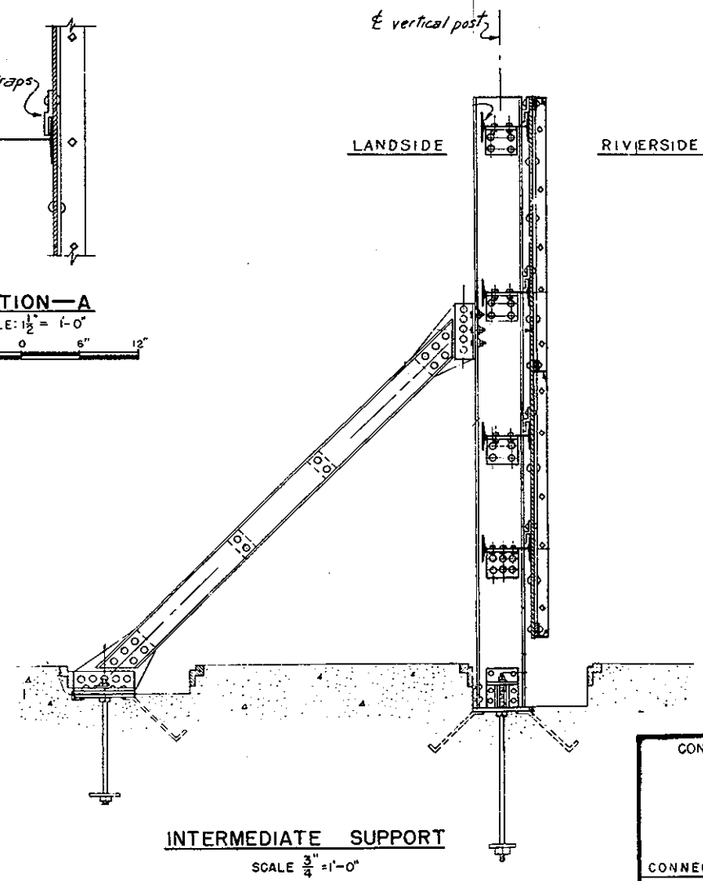

INTERMEDIATE SUPPORT
SCALE ¾" = 1'-0"

CONNECTICUT RIVER FLOOD CONTROL
RIVERDALE DIKE
WEST SPRINGFIELD, MASS
STOP-LOG STRUCTURES
CLOSURE DETAILS
CONNECTICUT RIVER, MASSACHUSETTS.

OPERATION AND MAINTENANCE MANUAL
PREPARED BY
CORPS OF ENGINEERS, U. S. ARMY.
OFFICE OF THE DIVISION ENGINEER
NEW ENGLAND DIVISION BOSTON, MASS.
DEC. 1950

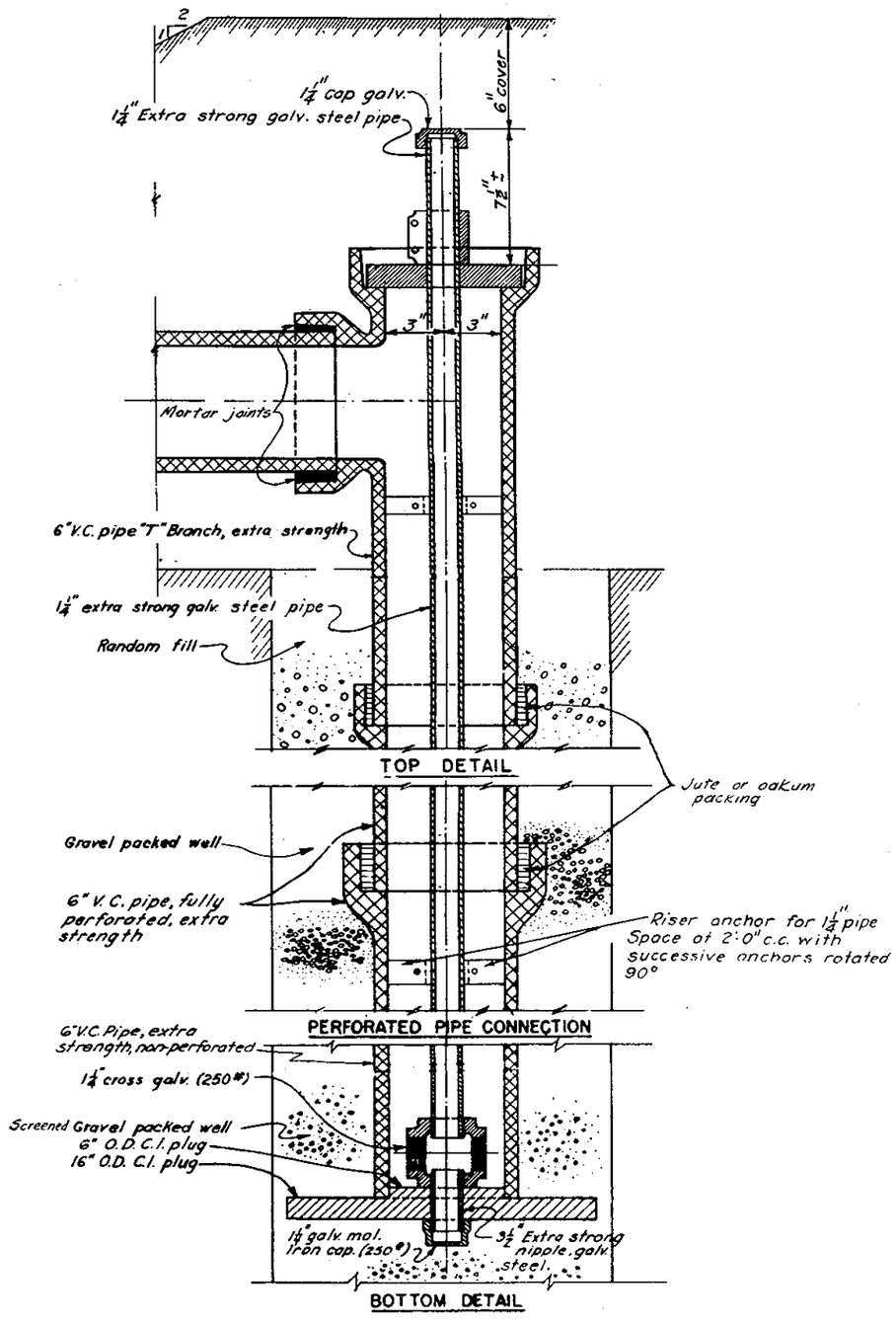

FOUNDATION RELIEF WELL DETAIL

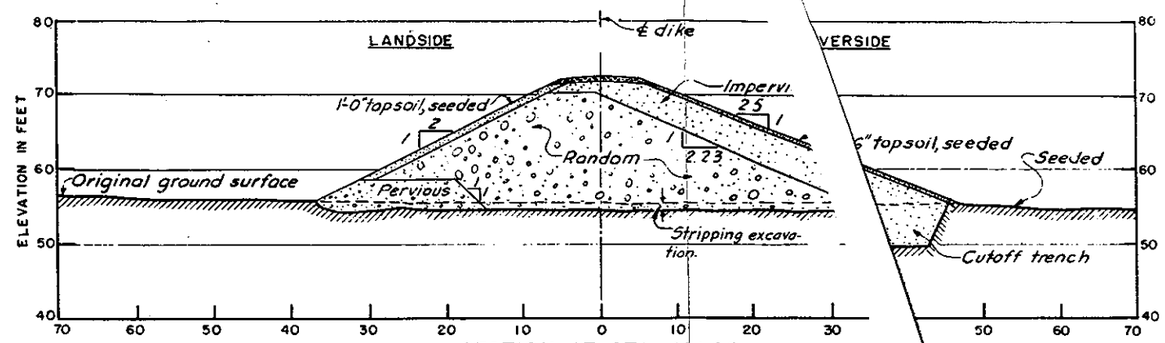

SECTION AT STA. 91+00

(TYPICAL BETWEEN STA. 2+70± AND STA. 10+00, AND STA. 40+00 AND STA. 131+50±)

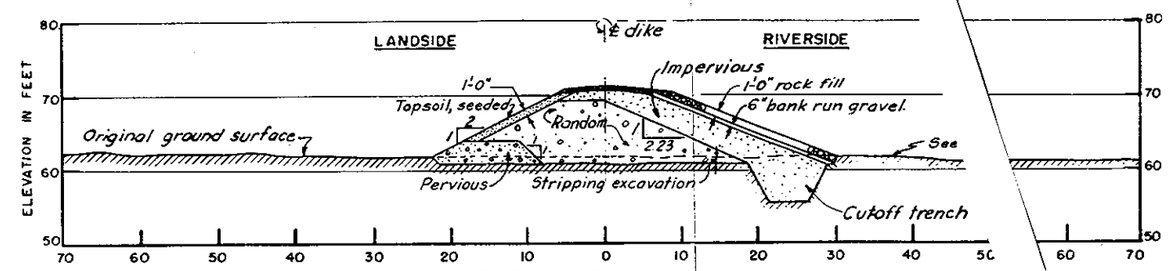

SECTION AT STA. 38+00

(TYPICAL BETWEEN STA. 10+00 AND STA. 40+00)

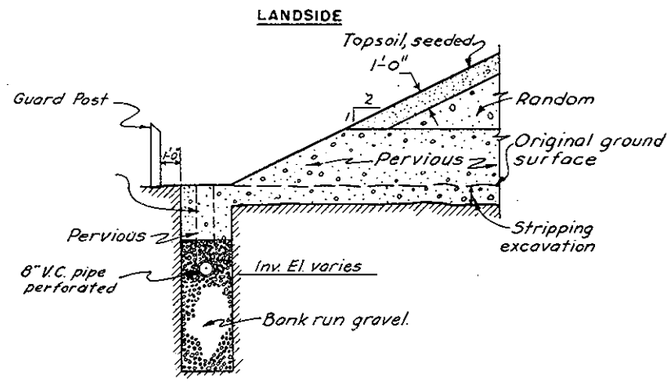

DETAIL OF TYPE "A" TOE DRAIN

CONNECTICUT RIVER FLOOD CONTROL

RIVERDALE DIKE

WEST SPRINGFIELD, MASS.

EMBANKMENT AND RELIEF WELL DETAILS

CONNECTICUT RIVER MASSACHUSETTS

OPERATION AND MAINTENANCE MANUAL

PREPARED BY
CORPS OF ENGINEERS, U. S. ARMY.
OFFICE OF THE DIVISION ENGINEER
NEW ENGLAND DIVISION BOSTON, MASS.

DEC. 1950

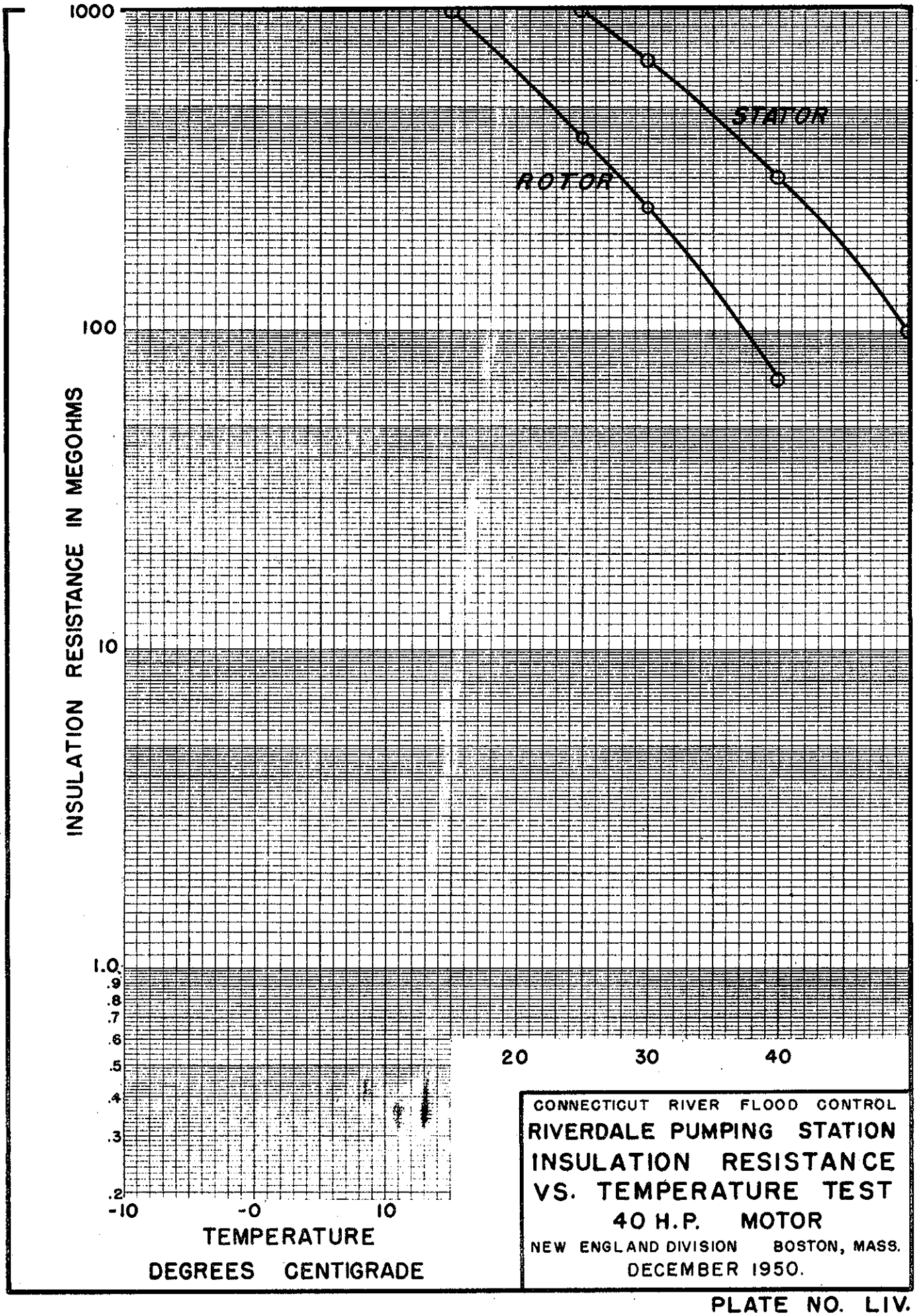

CONNECTICUT RIVER FLOOD CONTROL

RIVERDALE PUMPING STATION

INSULATION RESISTANCE VS. TEMPERATURE TEST

40 H.P. MOTOR

NEW ENGLAND DIVISION BOSTON, MASS.

DECEMBER 1950.

PLATE NO. LIV.

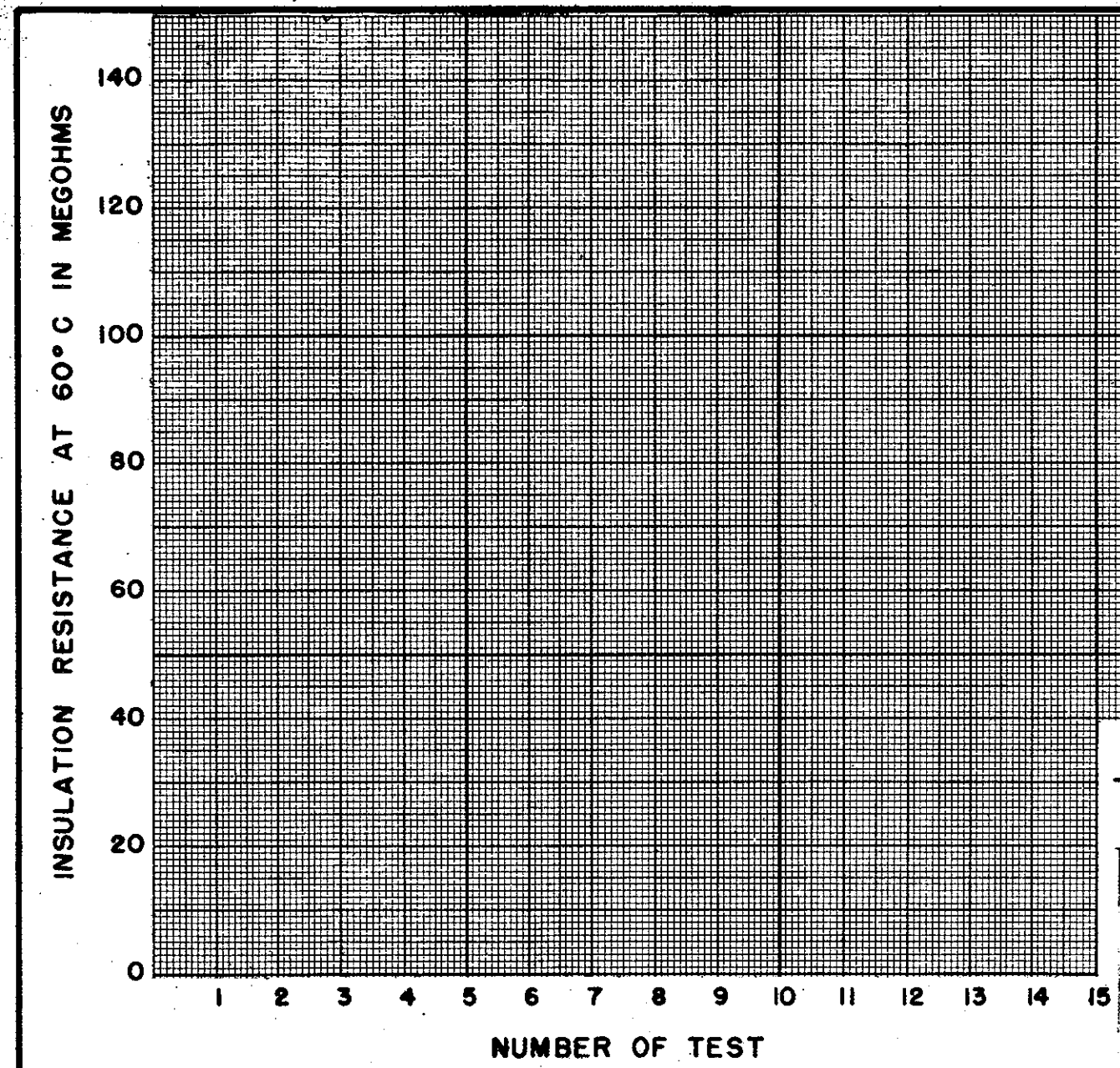

NOTE

Indicate date of test.

CONNECTICUT RIVER FLOOD CONTROL

WEST SPRINGFIELD

LOCAL PROTECTION

INSULATION RESISTANCE

VS TIME RECORD

NEW ENGLAND DIVISION BOSTON, MASS.

DECEMBER 1950

PLATE NO. LV

SECTION I

GENERAL

1-01. INTRODUCTION. - The greatest Connecticut River flood of record, that of March 1936, overtopped the dikes in West Springfield by about six feet and inundated the thickly-settled business and residential area in the southerly portion of the Town. These dikes, which were constructed by local interests, extended generally from North End Bridge on the Connecticut River to high ground above Agawam Bridge on the Westfield River and were approximately equal in elevation to the 1927 high water. The construction program of the Department of the Army in West Springfield, beginning in fiscal year 1937 and continuing intermittently to date, has in effect supplanted the Town dikes by an enlarged and modernized local protective works, intended to protect substantially the same area against a design flood, greater than any of record, as modified by a system of twenty reservoirs. Local protection has also been extended to include a contiguous area to the north, known as the Riverdale section. Construction of the Riverdale Dike was completed in 1949.

1-02. AUTHORIZATION. - a. WEST SPRINGFIELD DIKE. Work was initiated in fiscal year 1937 under the provisions of the Emergency Relief Appropriation Act of June 22, 1936. Funds available were sufficient for the raising of the line of protection to an elevation slightly above the 1936 flood-line throughout the existing system except that no work was done on the section of dike on the Westfield River extending 6100 feet downstream from Agawam Bridge. This section was brought to design grade in fiscal year 1938 under the provisions of the Emergency Relief Appropriation Act of June 29, 1937. The balance of the dike system was raised to design grade under authorization of the Flood Control Act approved June 28, 1938 (Public No. 761-75th Congress) (H. Doc. 455, 75th Congress - 2d Session). This authorization also covers a post-war project which provided for installation of seepage relief wells, drainage system at landside toe of dike and partial sheet pile cut-offs at two locations at the riverside toe of the dike extending about 6100 feet along the Westfield River downstream of the Agawam Bridge.

b. RIVERDALE DIKE. This project was included in the Second Interim Report on the control of floods in the Connecticut River Basin which has been published as House Document 724, 76th Congress, 3d Session. It was approved by the Flood Control Act of 18 August 1941 (Public No. 228, 77th Congress, 1st Session).

1-03. LOCATION. - The location of the dikes is shown on Plate No. V. a. WEST SPRINGFIELD DIKE. The northerly end of this project is on the west bank of the Connecticut River at River Mile 78. From this point the project runs southerly about two miles

SUPERSEDED

to the confluence of the Connecticut and Westfield Rivers, thence westerly and northerly along the Westfield River for nearly three miles. b. RIVERDALE DIKE. This dike extends from high ground on the south bank of Goldine Brook to high ground on the north bank of Bagg Brook, a distance of 12,900 feet.

1-04. DATES OF CONSTRUCTION. - a. WEST SPRINGFIELD DIKE. The original dikes in West Springfield were constructed by local interests. In March 1936, when the major flood of record occurred, they offered protection to the approximate elevation of the 1927 high-water and consequently were damaged and overtopped.

Between September 1936 and June 1937 the dikes were strengthened and enlarged by the Corps of Engineers, certain portions being replaced by concrete flood walls. The new line of protection was equal to or slightly above the flood of 1936. No work was done in the dike area immediately below Agawam Bridge for a length of 6100 feet. This section was enlarged in the Fall of 1937 and the Spring of 1938 and was the first section brought to project grade, an elevation designed, with the assistance of the comprehensive 20 reservoir system, to protect against the design flood, greater than any of record.

The high-water of September 1938 was met, therefore, by a system of dikes and walls of an elevation at least equal to the 1936 flood level and extending from high ground 2400 feet above North End Bridge along the Connecticut River and the Westfield River to high ground above Agawam Bridge near the Boston and Albany Railroad - River Street underpass. Reaching an elevation only 3 feet below the major flood of record, it severely tested the dike system, and afforded an opportunity for observation of inherent weaknesses.

In the Spring of 1939 the Corps of Engineers began a program of strengthening and amplifying the entire local protection system. The final unit of this program, a foundation treatment to a section of dike extending downstream from the Agawam Bridge, was completed during the 1947 construction season.

In general, all earth dikes are now at project grade; concrete flood walls built in 1936-1937 remain at an elevation slightly above that of the 1936 flood and, correspondingly, slightly below project grade; the concrete walls built during and after 1939 are at project grade. Pumping stations have been built by the Government and are operative at the three major sewage outfalls.

SUPERSEDED

A minor outlet at Agawam Bridge is serviced by a small pumping station built by the Town. All other drains from the protected areas to the rivers are gated for closure during high-water periods. A complete line of protection to the elevation of the 1936 flood is now available without necessity for sandbag extensions.

b. RIVERDALE DIKE. This project consists of an earth dike, three highway closure structures and two pumping stations. Construction was begun in April 1949 and completed in June 1950.

Superseded

SUPERSEDED

accomplished during the appropriate season as scheduled by the Superintendent."

b. Any unusual settlement, sloughing or caving should be corrected to restore the original dike grades. No major repair work shall be made without prior approval of the Division Engineer in order that such repairs that may be necessary will not adversely affect the functioning of the protective facilities.

c. The dikes between Memorial Bridge and North End Bridge were rebuilt with a core of free draining material. A drain was installed at the landside toe as an outlet for seepage through the dike during high water to prevent saturation of the landside slope and the resultant sloughing. The remainder of the earth dikes have cores of semi-impervious material.

(1) The toe drains should be inspected periodically and any silt affecting their proper functioning should be removed.

d. Foundation relief wells: There are 110 foundation relief wells located in the landside toe of the West Springfield Dike from Agawam Bridge to the Circuit Avenue Pumping Station. These wells are spaced variously at 50 and 75 foot centers as shown on Plate No. XXIIIA. The mandrel pipe is provided with 1-1/4" galvanized iron caps. These caps should be removed once a year and the 6" V.C. pipe flushed out with clean water to remove any silt or dirt which may have been washed into it. In uncovering these caps, care should be taken not to damage the upper portion of the well pipe. At the Riverdale Dike there are 48 foundation relief wells between Stations 70 + 00 and 110 + 00, spaced at 50, 100 and 125 foot centers. In the relief wells adjacent to piezometers the top of the mandrel pipe is fitted with a brass plug and coupling and inclosed in a valve box in order to facilitate observation. In the remaining relief wells, the mandrel pipe is provided with the same type of cap as at the West Springfield Dike. Another pressure relief treatment consists of moderately deep landside toe drain trenches. These occur at the following stations:

Stop-Log "N" to Sta. 15+00
Sta. 24+00 to Sta. 31+00
Stop-Log "S" to Sta. 123+00

Risers are provided at intervals along these drains for observation and cleanout purposes.

e. The grassed slopes should be cut regularly to promote good turf and not allowed to go to hay. The grass should be cut back when it reaches a height of about 8 inches to about 4 inches.

SUPERSEDED

SECTION VII

OPENINGS THROUGH THE PROTECTIVE WORKS

7-01. DESCRIPTION. In addition to the stoplog closure structures there are utilities, drains, sewers, and pumping station discharges passing through the dikes. These features are listed below for reference.

a. WEST SPRINGFIELD DIKE

Location	Station	Description	Invert Elevation
North of North End Bridge	7+06	9" C.I. Sewer Outfall	46.8 at discharge
	8+96	Warren St. Pumping Sta.	45.5 " "
	9+75.9	Town Pumping Station	44.0+ " "
	15+65	Southworth St. Sewer	44.0 " "
North End Bridge to Memorial Bridge	1+65	12" Catchbasin Outfall	
	6+90	12" Sewer Outfall	
	23+07	66" Sewer Outfall Cottage Street	41.0 " "
	23+16	24" Sewer Outfall Cottage Street	46.0 " "
	59+70.06	Bridge St. Pumping Sta.	38.9 " "
Memorial Bridge to Sta. 32+00	2+90.48	6" Gas main	
	11+06.38	U.E.L. Cable Crossing	
	13+21	12" Pipe Drain	56.2 " "
Sta. 32+00 to Sta. 56+87	51+88.38	6" Sewer-two outlets	58.9 ℄ of dike
	65+67	Circuit Ave. Pumping Sta.	41.2 at discharge
Sta. 56+87 to Agawam Bridge.	- 117+00	Town Pumping Station, 12" & 24"	46.2 " "
Above Agawam Bridge	- 154+60	Drain from Riverstreet Underpass	

b. RIVERDALE DIKE

Stop-log "N"	4+64	6" Gas Main	-
"	4+72	10" Water Main	-
"	5+05	20" C.I. Pipe-Sanitary Inflow	57.4
"	5+25	24" C.I. Pipe-Storm Sewer outfall	53.25
Wayside Pumping Sta.	27+25	24" C.I. Pipe-Discharge	50.75

SUPERSEDED

the greatest degree of protection from floods.

1. When the river rises, permit water to rise in Oxbow Pond to elevation 48.0 and then close the sluice gate at the entrance to the gravity flow conduit.

2. Operate the pumps to maintain the pond elevation at 48.0 as long as possible. Inflow will consist only of concurrent storm runoff and seepage and the rate of pumping will depend on the rate of inflow.

3. When the river recedes, maintain the pond at elevation 48.0 until the river stage is lower than that elevation. Then open the sluice gate in the gravity flow conduit.

(2) RIVERDALE DIKE. (See Plate XLII of Appendix D)

(All river elevations are on Mean Sea Level Datum and refer to elevations as indicated on the river level gage in each pumping station).

(a) Wayside Pumping Area.

1. When the river rises to elevation 55.0:

Open No. 5 Sluice Gate at the upper end of the 42" drain on the north side of Wayside Avenue.

Close No. 4 Sluice Gate on 42" gravity outfall sewer at the intersection of Wayside and Ashley Avenues.

Close No. 11 Sluice Gate

The steps indicated above will cause all flow, normally discharged by gravity through the 42" outfall sewer at the Chicopee Bridge to be diverted to the pumping station and pumps should be operated as required to maintain stages in the suction chamber between elevations 50.0 and 53.5. (See Plate XLIX). Stop-planks are provided at the overflow weir in order to limit use of the storage pond to those flows which exceed the pumping capacity. When it becomes apparent that pumping capacity will be exceeded, remove the stop-planks. Flow into and from the storage pond will then be automatically controlled by the weir and flap gates respectively.

2. When the river reaches elevation 58.0:

Close No. 2 Sluice Gate at Stop-log "N" to divert the flow in the storm sewer along Riverdale Road to Wayside Pumping Station.

Erect aluminum closure members across one half of the roadway at Stop-log "N" and Stop-log "E".

SUPERSEDED

3. When the river reaches elevation 60.0:

If the forecast river stage is less than 62.0, report by telephone to the New England Division Office, Flood Control Section, for instructions. If communications are disrupted, complete closures of Stop-log "N" and Stop-Log "E".

If the forecast river stage is higher than elevation 62.0, complete closures of Stop-log "N" and Stop-Log "E".

4. When the river rises to elevation 62.0:

Close No. 1 Sluice Gate at Stop-Log "N".

5. When the flood has receded to elevation 61.0 and the forecast indicates the recession will continue, remove closures at Stop-log "N" and Stop-log "E".

6. As the flood continues to recede, restore sluice gates to normal (low flow) position at the same river elevations and in reverse order to those indicated for rising stages.

(b) <u>Riverdale Pumping Area</u>

1. When the river rises to elevation 51.0:

Close No. 10 Sluice Gate at the inlet end of the discharge conduit.

Close No. 6a Sluice Gate and open No. 6b Sluice Gate at Stop-log "S" to divert sanitary flows to the pumping station.

Close No. 7 Gate Valve.

Check No. 8 Sluice Gate for open position.

Check No. 9 Gate Valve for open position.

Operate the pumps as required to discharge storm water sewage and seepage into the river, and maintain stages in the suction chamber between elevations 46.0 and 50.5. (See Plate LI). A gated cross-connection is provided so that either pump may be used. Stop-planks are provided at the overflow weir in order to limit use of the storage pond to those flows which exceed the pumping capacity. When it becomes apparent that pumping capacity will be exceeded, remove the stop-planks. Flow into and from the storage pond will then be automatically controlled by the weir and flap gates respectively.

SUPERSEDED

(g) Emergency Water. - The sump pump is provided with emergency connections to furnish a cooling water supply to the gasoline engines in the event of failure of the water supply from the municipal system. The discharge of the pump may be connected to the engine-cooling water system through a swing connection arranged so that it is impossible for any of the discharge from the sump pump to get into the town water supply system.

(h) Trash Racks. - Movable trash racks are provided in the intake structure to screen out any large objects that might damage or clog the pumps during pumping operations. Manual hoists are provided for the racks so that the racks may be raised to facilitate cleaning and maintenance.

(i) Heating System. - An oil-fired low-pressure steam heating system is provided to eliminate the necessity of draining the complete water system after each maintenance routine in the winter months, to facilitate starting engines, and to prevent the severe humidity conditions that would prevail without a heating system.

c. Circuit Avenue Pumping Station. (See Plates XXXIX to XLI).
(1) System. - The Circuit Avenue Pumping Station has a tributary drainage area of 528 acres and is located at the lower end of an existing oxbow lagoon. The drainage to the oxbow lagoon is by natural channels and a few small storm drains from nearby ground occupied by the Eastern States Exposition. The storage capacity of the oxbow lagoon is 90 acre-feet between Elevation 48.0 and Elevation 50.0 mean sea level datum.

(2) Pumping Station. - The pumping station, constructed of reinforced concrete for the substructure and having a superstructure of structural steel and brick with glass block window panels, houses two 24-inch volute pumps. The station is equipped to pump from the Oxbow pond and discharge into the conduit leading through the dike into the Westfield River. The purpose of the storage pond is to provide a means of storing any excess of runoff that the pumping capacity of the station will not handle at times of maximum runoff. During flood operation, pumps should be operated to maintain the water surface in the pond at Elevation 48.0 to provide adequate storage capacity in the event a high runoff occurs.

(3) Pumping Station Equipment. - (a) Electric Supply. - Electric power is furnished the station by an underground 115/230 volt service from the power company. The supply feeds through a service switch, a two-pole, double-throw switch and to the distribution panelboard. The double-throw switch is provided to allow an auxiliary power supply to be connected at a future date if desired. The distribution panelboard controls the lighting, receptacle, battery charger and sump pump circuits.

SUPERSEDED

SECTION IX

DRAWINGS AND SPECIFICATIONS

9-01. DRAWINGS AND SPECIFICATIONS. - Complete sets of contract plans and specifications were given the Town of West Springfield when the various projects were completed and turned over to the Town for maintenance and operation. A tabulation of these projects and the dates of transfer and acceptance is given below.

Item	Project	Turned Over	Accepted
W.S. 1	Dike above Agawam Bridge (Hired Labor)	Oct. 10, 1939	Oct. 13, 1939
W.S. 2	Memorial Bridge to Station 32+00	Oct. 28, 1939	Nov. 3, 1939
W.S. 3	Dike Station 32+00 to 56+87	Jun. 27, 1941	Jul. 8, 1941
W.S. 4	Dike Station 56+87 to Agawam Bridge	Jul. 15, 1938	Jul. 20, 1938
W.S. 5	North End Bridge to Memorial Bridge	Jan. 10, 1941	Jan. 13, 1941
W.S. 6	North of North End Bridge	Oct. 10, 1939	Oct. 13, 1939
W.S. 7a	Warren Street Pumping Station	Jun. 15, 1943	Jun. 29, 1943
W.S. 7b	Bridge Street Pumping Station	Jul. 18, 1942	Jul. 21, 1942
W.S. 7c	Circuit Ave. Pumping Station	Jul. 18, 1942	Jul. 21, 1942
—	Riverdale Dike	Nov. 1, 1950	Nov. 2, 1950

SUPERSEDED

APPENDIX "D"

DRAWINGS

	Plate
Project Map of Local Protection Works	V
STANDARD HIGH WATER MAINTENANCE METHODS	
Sack Dike or Topping	I
Model Sack Dike or Topping	IA
Lumber & Sack Topping	II
Sand Boil	III
Effects of Sand Boils on Levee	IIIA
Sacking Sloughs	IV
Detail of Stop-Log Closure	IVA
Emergency Flash Boards	IVB
OPERATIONS	
West Springfield Dike	
General Plan & Operations Chart	VA
Riverdale Dike	
General Plan & Operatins Chart	XLII
PLANS AND PROFILES	
West Springfield Dike	
North of North End Bridge	VI to VIII
North End Bridge to Memorial Bridge	IX to XVII
Memorial Bridge to Agawam Bridge	XVIII to XXVI
Plan Showing Manholes & Relief Wells	XXIIIA
North of Agawam Bridge	XXVII to XXX
Warren Street Pumping Station	XXXI to XXXIV
Bridge Street Pumping Station	XXXV to XXXVIII
Circuit Avenue Pumping Station	XXXIX to XLI
Riverdale Dike	
Drainage System	XLIII to XLVII
Wayside Pumping Station	XLVIII & XLIX
Riverdale Pumping Station	L & LI
Stop-Log Structures	LII
Embankment & Relief Wells	LIII

SUPERSEDED

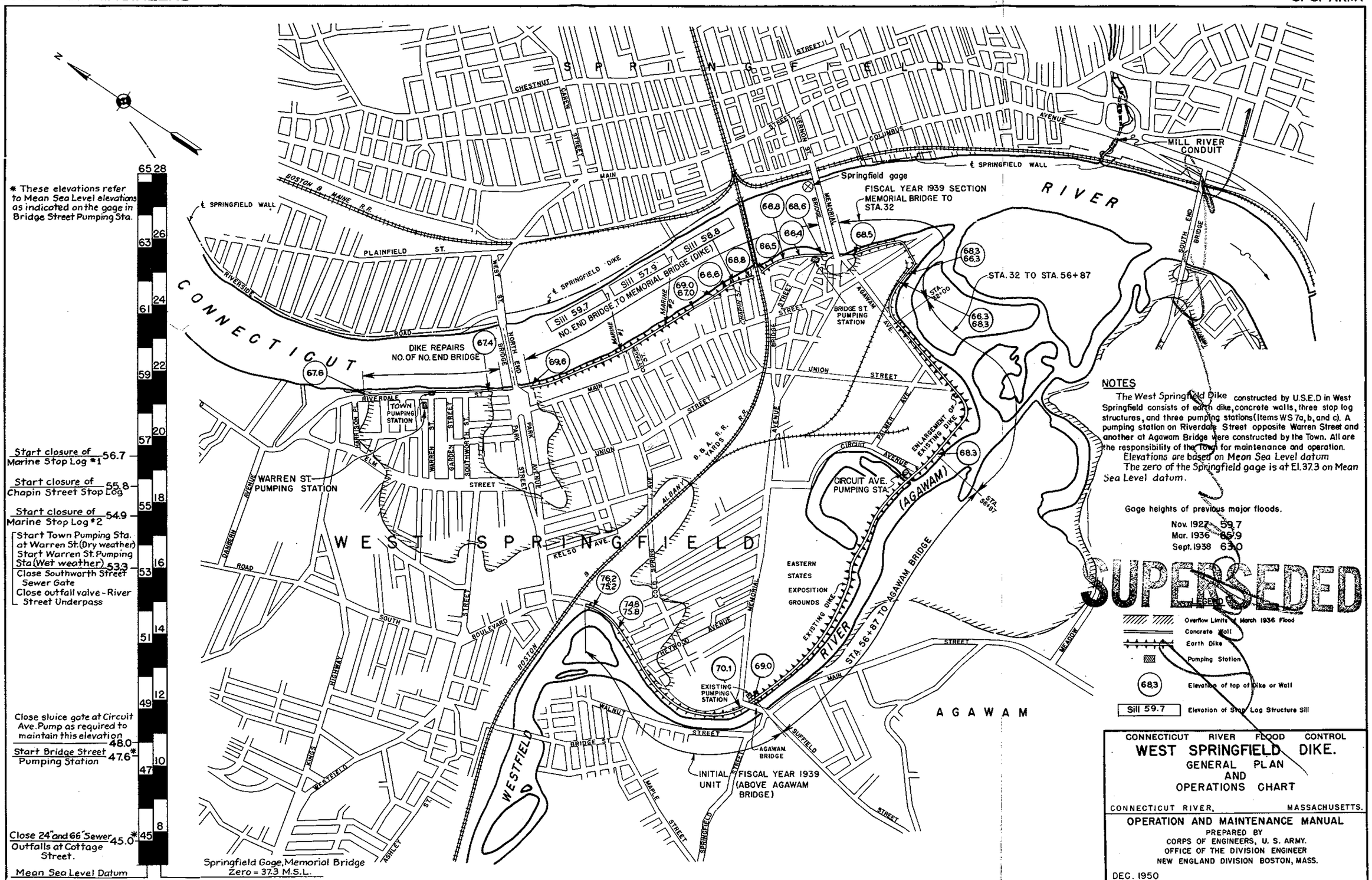
* These elevations refer to Mean Sea Level elevations as indicated on the gage in Bridge Street Pumping Sta.
65 28
63 26
61 24
59 22
57 20
55 18
53 16
51 14
49 12
47 10
45 8
Start closure of Marine Stop Log #1 56.7
Start closure of Chapin Street Stop Log 55.8
Start closure of Marine Stop Log #2 54.9
Start Town Pumping Sta. at Warren St. (Dry weather)
Start Warren St. Pumping Sta (Wet weather) 53.3
Close Southworth Street Sewer Gate
Close outfall valve - River Street Underpass
Close sluice gate at Circuit Ave. Pump as required to maintain this elevation 48.0
Start Bridge Street Pumping Station 47.6*
Close 24" and 66" Sewer Outfalls at Cottage Street. 45.0*
Mean Sea Level Datum
N
SPRINGFIELD
WEST SPRINGFIELD
CONNECTICUT RIVER
AGAWAM
WESTFIELD
MILL RIVER CONDUIT
℄ SPRINGFIELD WALL
Springfield gage
FISCAL YEAR 1939 SECTION MEMORIAL BRIDGE TO STA. 32
STA. 32 TO STA. 56+87
STA. 56+87 TO AGAWAM BRIDGE
Sill 59.7 NO. END BRIDGE TO MEMORIAL BRIDGE (DIKE)
Sill 57.9
Sill 58.8
℄ SPRINGFIELD DIKE
DIKE REPAIRS NO. OF NO. END BRIDGE
BRIDGE ST. PUMPING STATION
TOWN PUMPING STATION
WARREN ST. PUMPING STATION
CIRCUIT AVE. PUMPING STA.
EXISTING PUMPING STATION
EASTERN STATES EXPOSITION GROUNDS
ENLARGEMENT OF EXISTING DIKE
AGAWAM BRIDGE
INITIAL UNIT FISCAL YEAR 1939 (ABOVE AGAWAM BRIDGE)
Springfield Gage, Memorial Bridge Zero = 37.3 M.S.L.
NOTES
The West Springfield Dike constructed by U.S.E.D in West Springfield consists of earth dike, concrete walls, three stop log structures, and three pumping stations (Items WS 7a, b, and c). A pumping station on Riverdale Street opposite Warren Street and another at Agawam Bridge were constructed by the Town. All are the responsibility of the Town for maintenance and operation.
Elevations are based on Mean Sea Level datum
The zero of the Springfield gage is at El. 37.3 on Mean Sea Level datum.
Gage heights of previous major floods.
Nov. 1927 59.7
Mar. 1936 65.9
Sept. 1938 63.0
SUPERSEDED
Overflow Limits of March 1936 Flood
Concrete Wall
Earth Dike
Pumping Station
68.3 Elevation of top of Dike or Wall
Sill 59.7 Elevation of Stop Log Structure Sill
CONNECTICUT RIVER FLOOD CONTROL
WEST SPRINGFIELD DIKE.
GENERAL PLAN AND OPERATIONS CHART
CONNECTICUT RIVER, MASSACHUSETTS.
OPERATION AND MAINTENANCE MANUAL
PREPARED BY
CORPS OF ENGINEERS, U. S. ARMY.
OFFICE OF THE DIVISION ENGINEER
NEW ENGLAND DIVISION BOSTON, MASS.
DEC. 1950

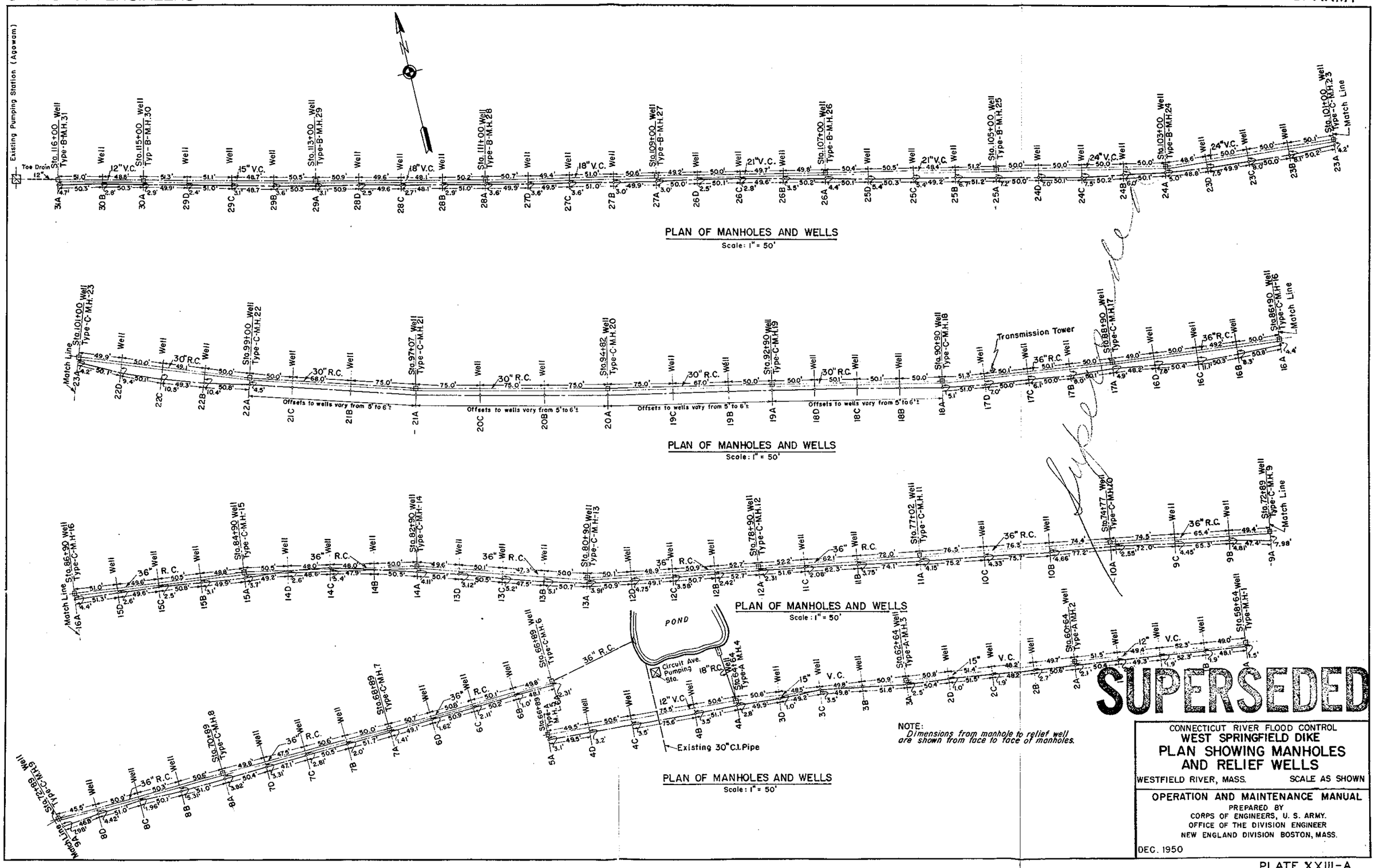

SUPERSEDED

NOTE:
Dimensions from manhole to relief well are shown from face to face of manholes.

CONNECTICUT RIVER FLOOD CONTROL
WEST SPRINGFIELD DIKE
PLAN SHOWING MANHOLES AND RELIEF WELLS
WESTFIELD RIVER, MASS. SCALE AS SHOWN

OPERATION AND MAINTENANCE MANUAL
PREPARED BY
CORPS OF ENGINEERS, U. S. ARMY.
OFFICE OF THE DIVISION ENGINEER
NEW ENGLAND DIVISION BOSTON, MASS.
DEC. 1950

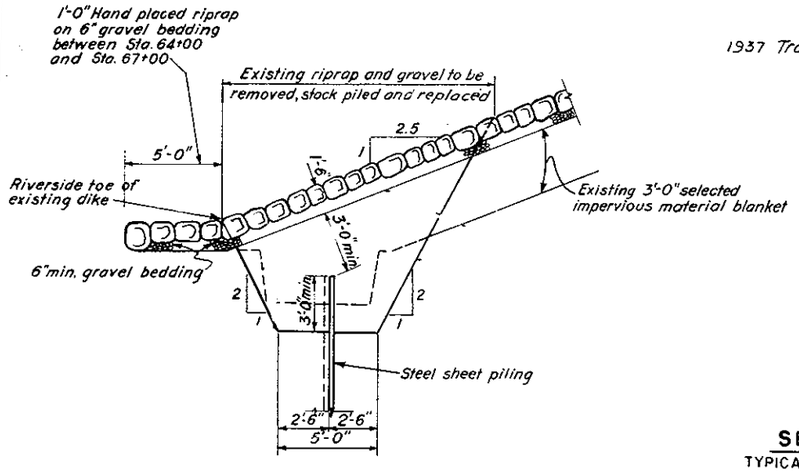

CUT-OFF TRENCH DETAILS

TYPICAL FROM STA. 64+00 TO 67+00

SCALE: 1" = 5'

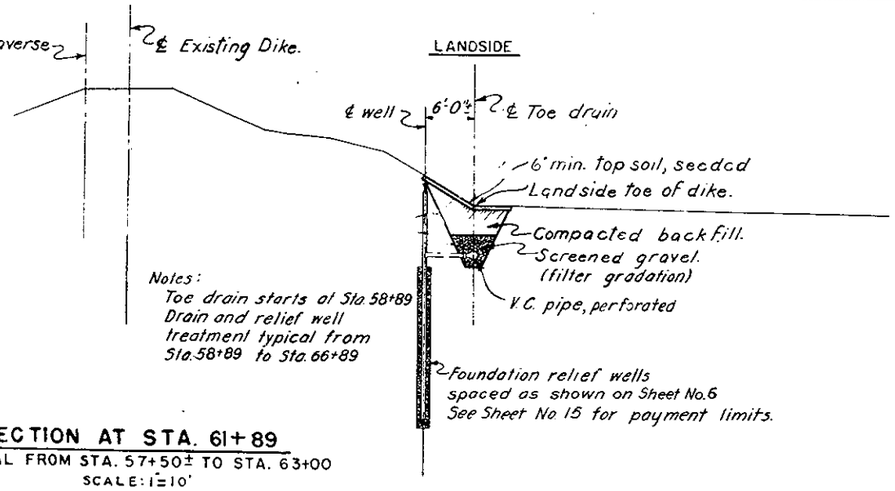

SECTION AT STA. 61+89

TYPICAL FROM STA. 57+50± TO STA. 63+00

SCALE: 1" = 10'

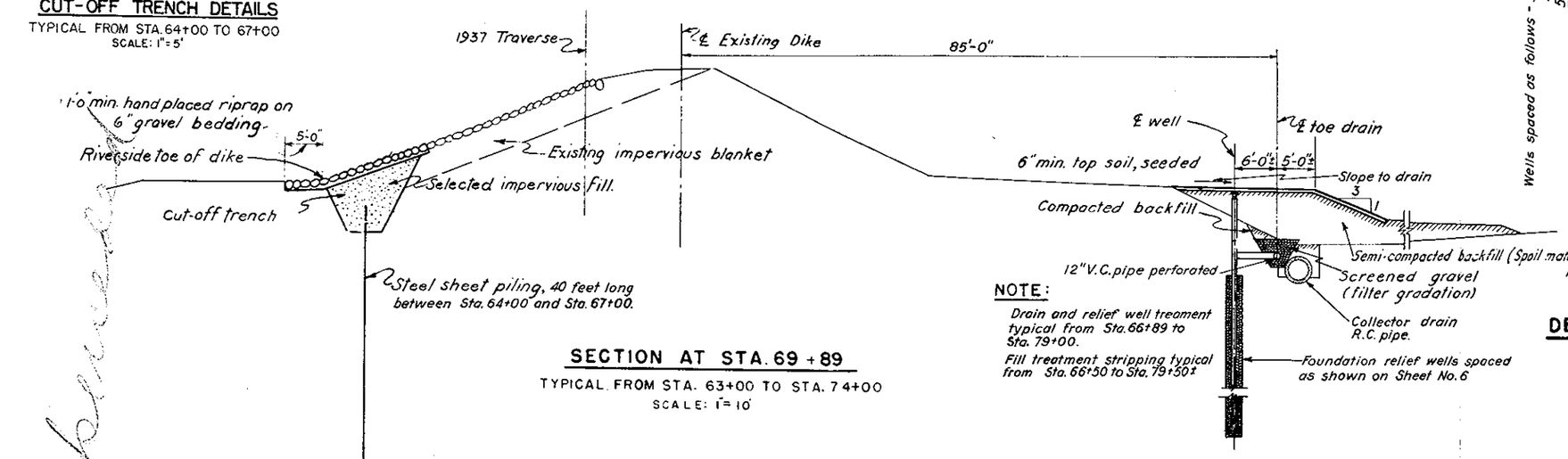

NOTE:

Drain and relief well treament typical from Sta. 66+89 to Sta. 79+00.

Fill treatment stripping typical from Sta. 66+50 to Sta. 79+50±

SECTION AT STA. 69+89

TYPICAL FROM STA. 63+00 TO STA. 74+00

SCALE: 1" = 10'

NOTE:

Dimension "A" shall be 2'-0" min (one length of pipe) for standard case. Dimension "A" may be increased in 2'-0" increments of solid pipe if required by the contracting officer dependent on local soil type. Top of gravel packing shall be 1' above top of porous pipe.

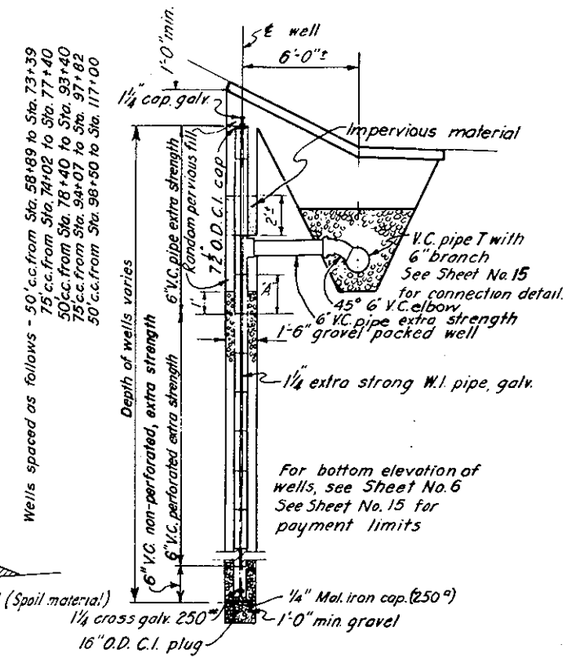

DETAIL OF FOUNDATION RELIEF WELL AND TOE DRAIN

SCALE: ¼" = 1'-0"

4' 0 4' 8'

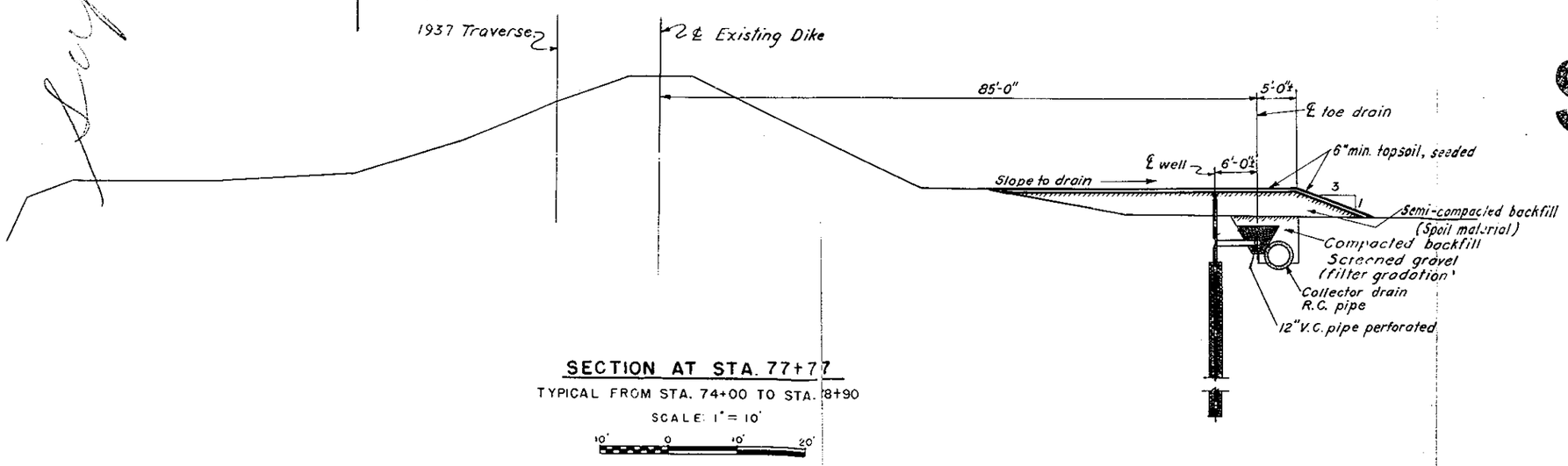

SECTION AT STA. 77+77

TYPICAL FROM STA. 74+00 TO STA. 78+90

SCALE: 1" = 10'

10' 0 10' 20'

SUPERSEDED

CONNECTICUT RIVER FLOOD CONTROL

WEST SPRINGFIELD DIKE

STA. 56+87 TO AGAWAM BRIDGE

FOUNDATION TREATMENT

TYPICAL CROSS SECTIONS NO. 1

WESTFIELD RIVER MASSACHUSETTS

OPERATION AND MAINTENANCE MANUAL

PREPARED BY
CORPS OF ENGINEERS, U. S. ARMY.
OFFICE OF THE DIVISION ENGINEER
NEW ENGLAND DIVISION BOSTON, MASS.

DEC. 1950

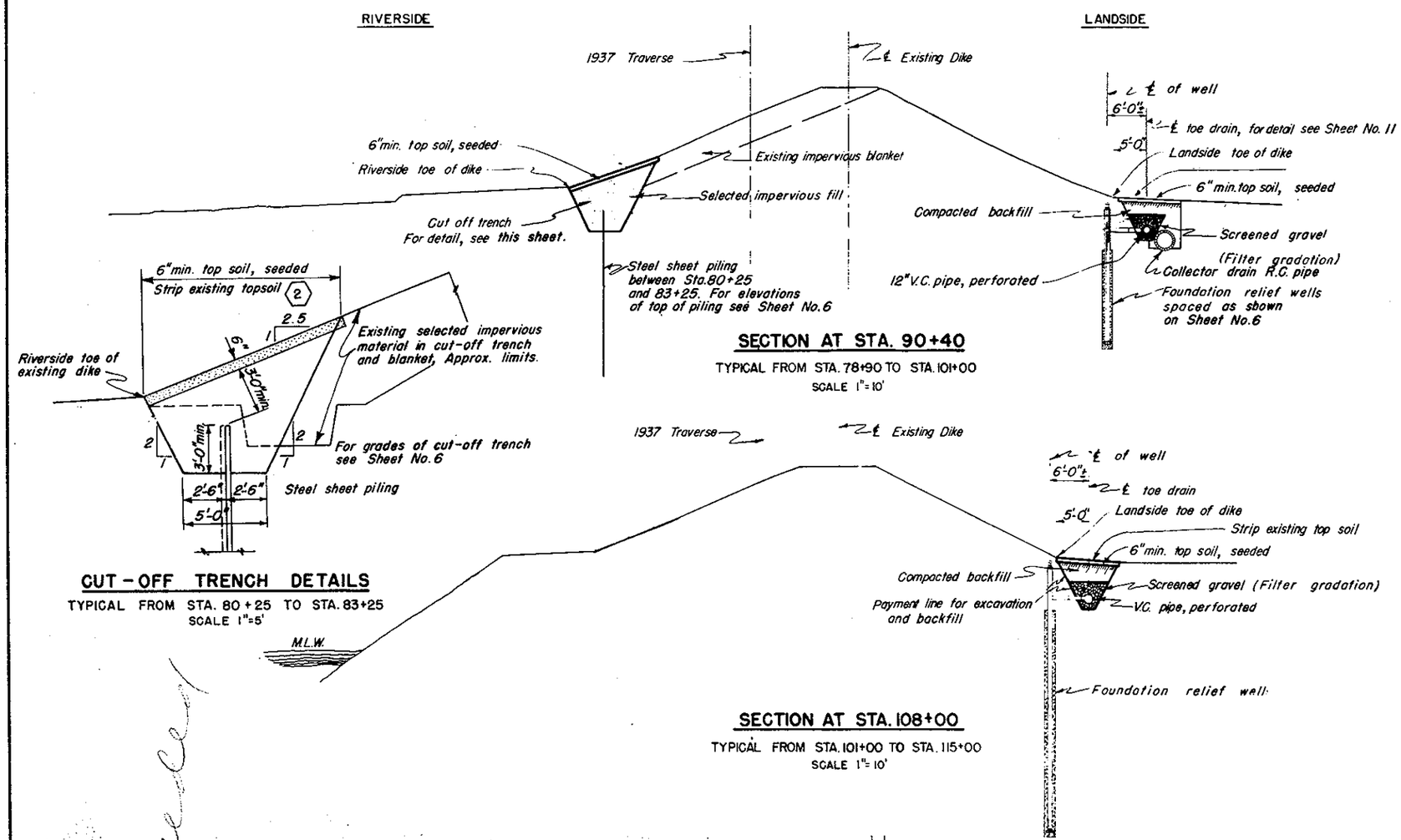

CUT-OFF TRENCH DETAILS

TYPICAL FROM STA. 80+25 TO STA. 83+25
SCALE 1"=5'

SECTION AT STA. 90+40

TYPICAL FROM STA. 78+90 TO STA. 101+00
SCALE 1"=10'

SECTION AT STA. 108+00

TYPICAL FROM STA. 101+00 TO STA. 115+00
SCALE 1"=10'

SECTION AT STA. 116+00

TYPICAL FROM STA. 115+00 TO STA. 117+35
SCALE 1"=10'

NOTE:

Dimension "A" shall be 2'-0" min. (one length of pipe) for standard case. Dimension "A" may be increased in 2'-0" increments of solid pipe if required by the Contracting officer dependent on local soil type. Top of gravel packing shall be 1' above top of porous pipe.

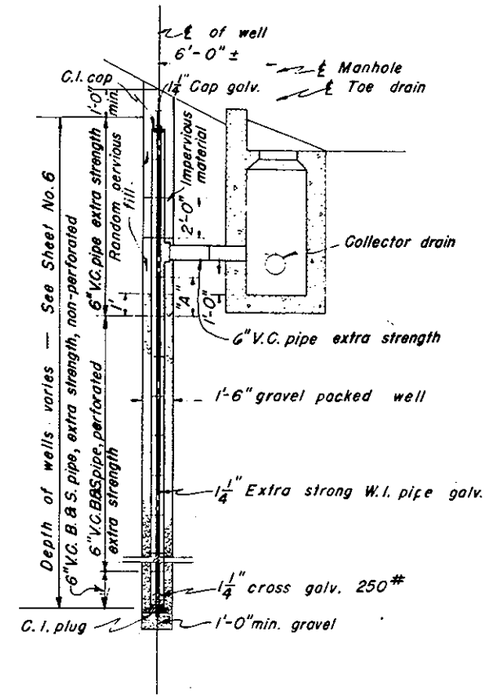

DETAIL OF FOUNDATION RELIEF WELL AND MANHOLE

SCALE $\frac{1}{4}$" = 1'-0"

4' 0 4' 8'

SUPERSEDED

Superseded

CONNECTICUT RIVER FLOOD CONTROL

WEST SPRINGFIELD DIKE

STA. 56+87 TO AGAWAM BRIDGE

FOUNDATION TREATMENT

TYPICAL CROSS SECTIONS NO.2

WESTFIELD RIVER MASSACHUSETTS

OPERATION AND MAINTENANCE MANUAL

PREPARED BY
CORPS OF ENGINEERS, U. S. ARMY.
OFFICE OF THE DIVISION ENGINEER
NEW ENGLAND DIVISION BOSTON, MASS.

DEC. 1950

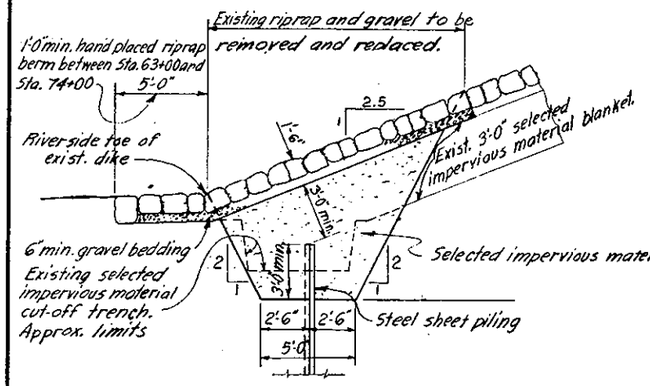

TYPICAL FROM STA. 63+00 TO STA. 74+00
AND FROM STA. 115+00 TO AGAWAM BRIDGE

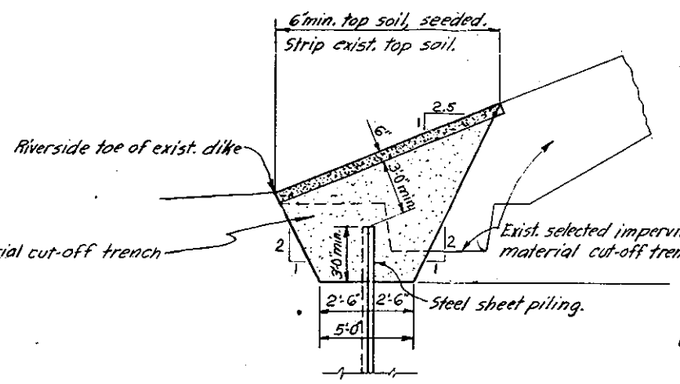

TYPICAL FROM STA. 57+50± TO STA. 63+00
AND FROM STA. 74+00 TO STA. 115+00

CUT-OFF TRENCH DETAILS

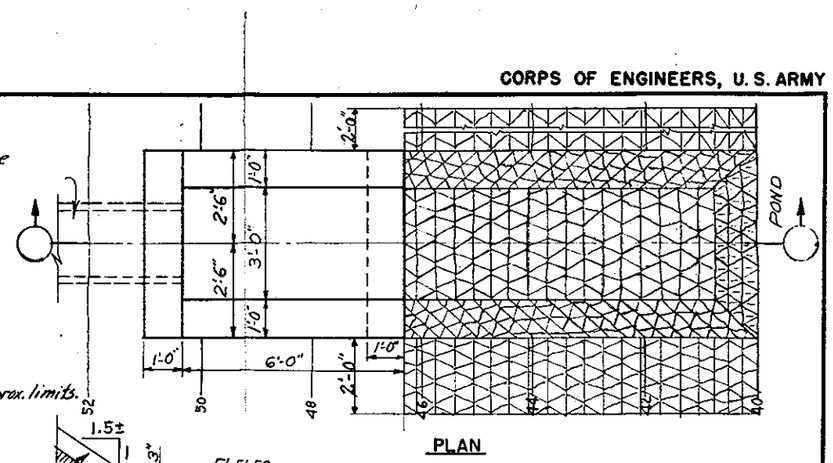

PLAN

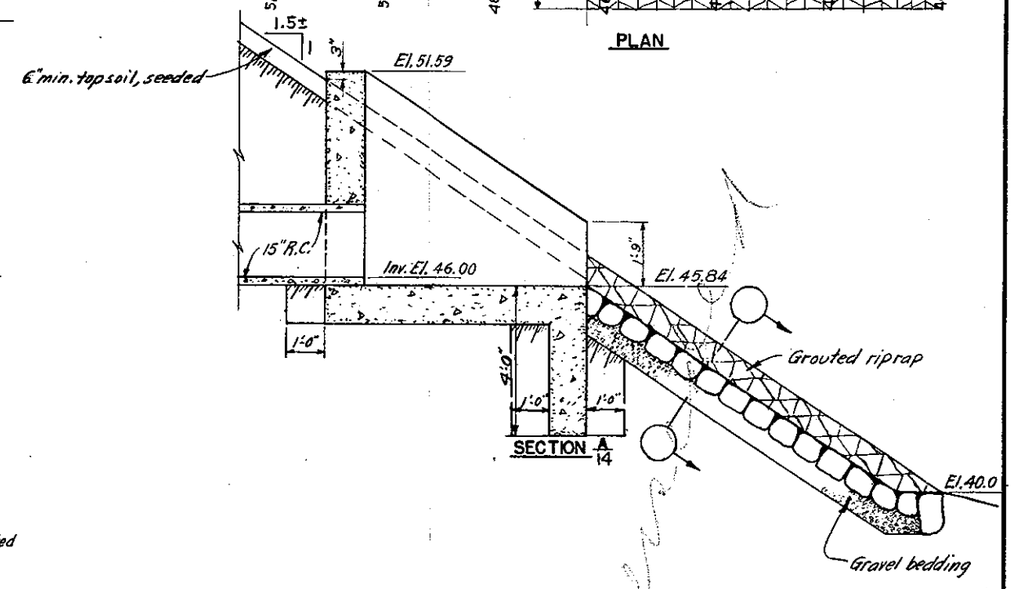

SECTION A/14

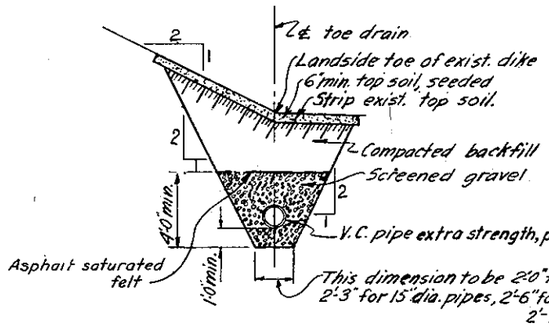

TYPICAL FROM STA. 59+00 TO STA. 67+00

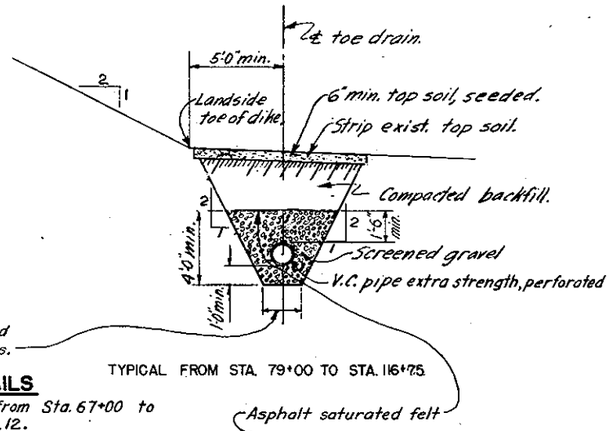

TYPICAL FROM STA. 79+00 TO STA. 116+75

TOE DRAIN DETAILS

NOTE: For detail of toe drain from Sta. 67+00 to Sta. 79+00, see Sheet No. 12.

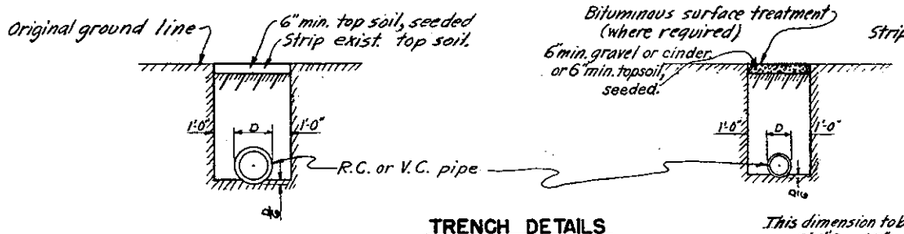

TRENCH DETAILS

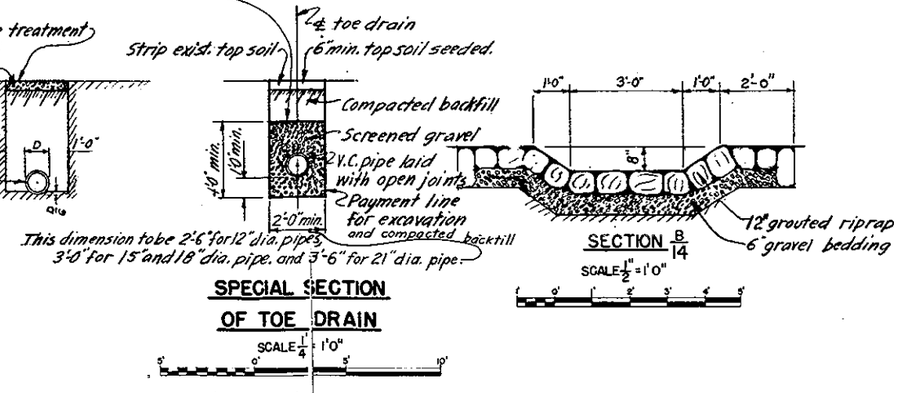

SECTION B/14

SCALE 1/2" = 1'-0"

SPECIAL SECTION OF TOE DRAIN

SCALE 1/4" = 1'-0"

For general notes applying to this sheet, see Plate XXIII.

SUPERSEDED

CONNECTICUT RIVER FLOOD CONTROL
WEST SPRINGFIELD DIKE
STA. 56+87 TO AGAWAM BRIDGE
FOUNDATION TREATMENT
DETAILS OF TRENCHES AND HEADWALL
WESTFIELD RIVER MASSACHUSETTS

SCALE 1/4 IN. = 1 FT.

U. S. ENGINEER OFFICE, PROVIDENCE, R.I.,

OPERATION AND MAINTENANCE MANUAL
WEST SPRINGFIELD, MASS.