U. S. ARMY CORPS
OF ENGINEERS

ROUTINE INSPECTION

OF THE

SAGAMORE HIGHWAY BRIDGE

OVER THE

CAPE COD CANAL - BOURNE, MA

ROUTINE INSPECTION FIELD NOTES

VOLUME II OF II

Prepared by:
Lichtenstein Consulting Engineers, Inc.
Natick, MA
July 2001

Prepared for:
U. S. Army Corps of Engineers
New England District
North Atlantic Division

NEW SAGAMORE BRIDGE OVER THE CAPE COD CANAL

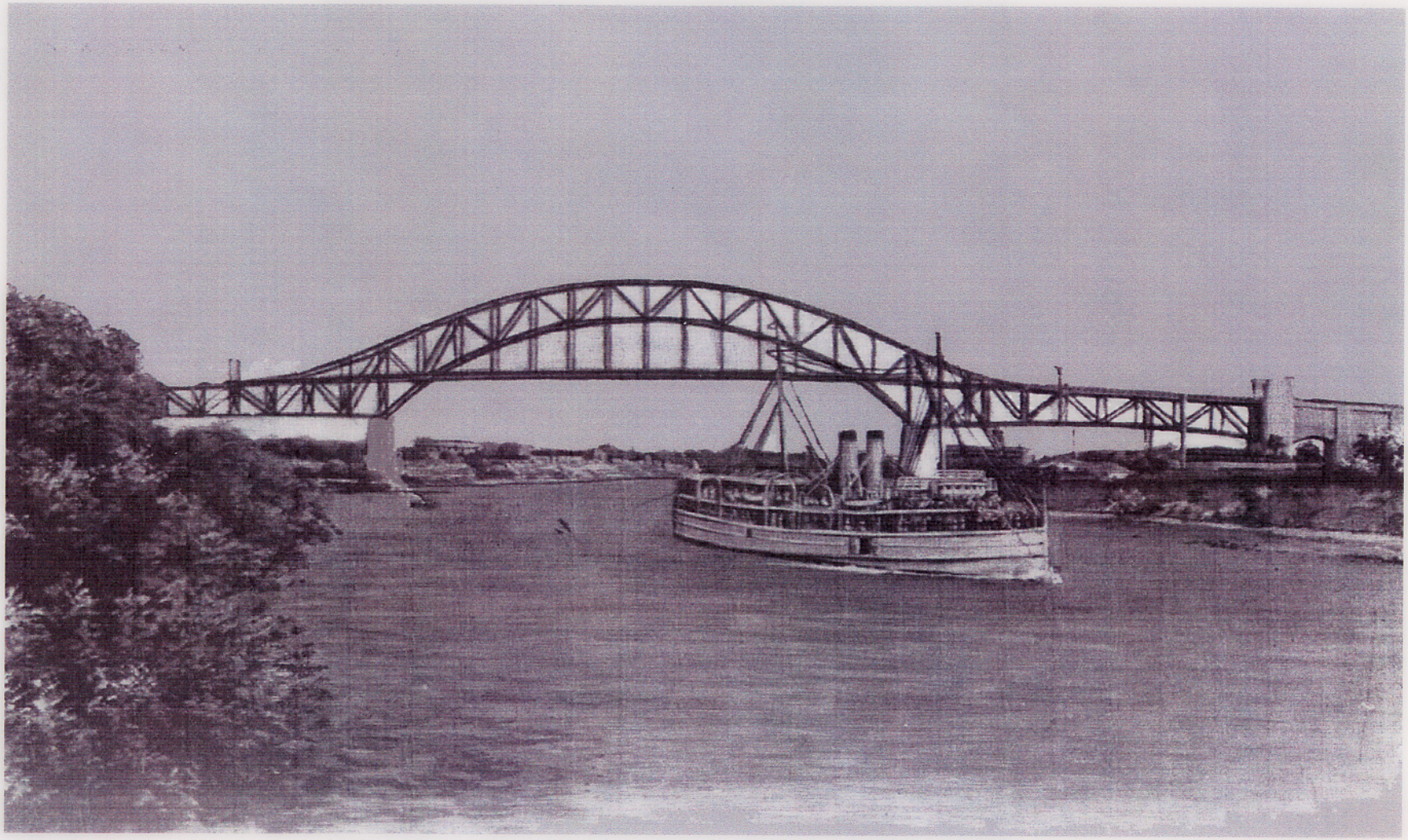

Scene reproduced from an antique postcard

VOLUME II

TABLE OF CONTENTS

PAGE

GENERAL PLAN AND ELEVATION i
ABBREVIATIONS & LEGEND ii
TYPICAL TRUSS CONDITIONS iii
TYPICAL FLOOR SYSTEM CONDITIONS iv

I. TRUSS MEMBERS

Span 3 1

Span 1 10

Span 2 29

II. FLOOR SYSTEM

Span 3 39

Span 1 65

Span 2 104

III. BEARINGS 129

IV. SUBSTRUCTURE 137

V. TOP OF DECK 190

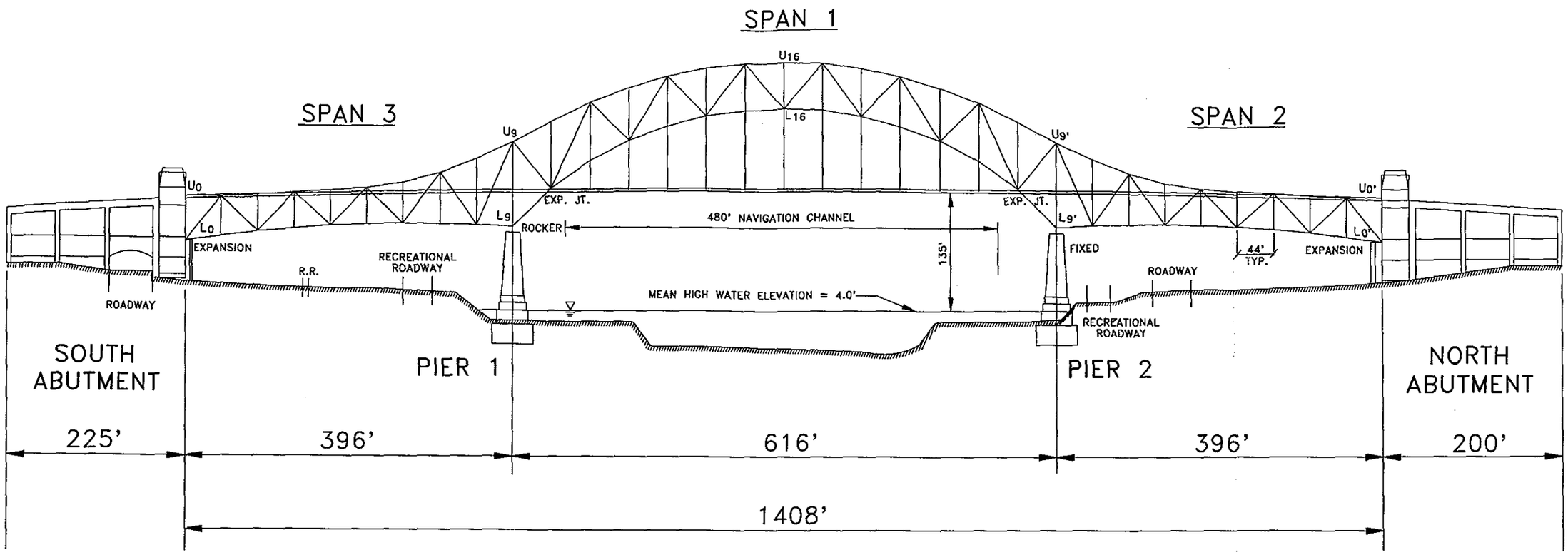

ELEVATION

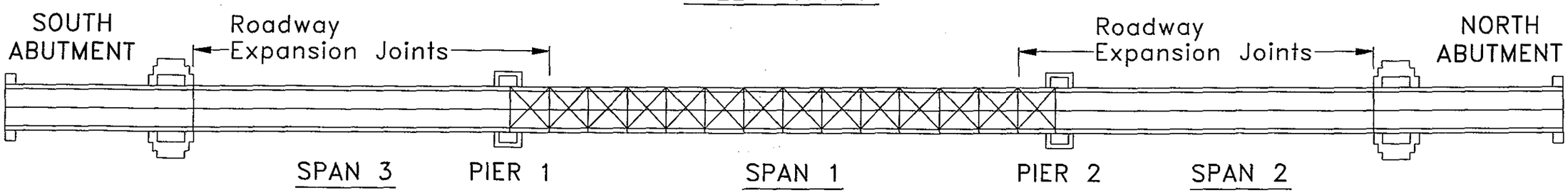

PLAN

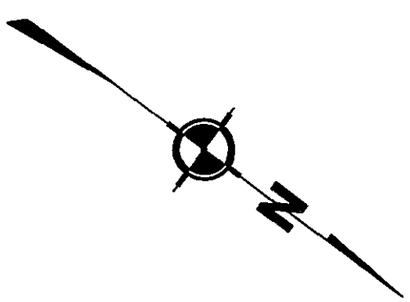

DEPARTMENT OF THE ARMY
NEW ENGLAND DISTRICT, CORPS OF ENGINEERS

SAGAMORE HIGHWAY BRIDGE
ROUTINE INSPECTION

Lichtenstein
LICHTENSTEIN CONSULTING ENGINEERS, INC.

GENERAL PLAN & ELEVATION

FILE: ELEV.DWG

SCALE: N.T.S.

DATE: 5/01

i

ABBREVIATIONS:

ORIENTATION		MEMBER TYPE		CONDITION	
BOT	BOTTOM	ABUT	ABUTMENT	AD	ABRASION DUST
BTWN	BETWEEN	∠	ANGLE	BR	BROKEN
℄	CENTER LINE	[	CHANNEL	CR	CRACK
E	EAST	CONC	CONCRETE	ø	DIAMETER
ELEV	ELEVATION	CONN	CONNECTION	EFFLO	EFFLORESCENCE
EXT	EXTERIOR	CONST	CONSTRUCTION	HL	HAIRLINE
FH	FULL HEIGHT	DIAG	DIAGONAL	HVY	HEAVY
FW	FULL WIDTH	EXP	EXPANSION	HC	HONEYCOMBING
HORIZ	HORIZONTAL	FB,FLBM	FLOORBEAM	ID	IMPACT DAMAGE
INT	INTERIOR	℉,FL	FLANGE	IR	IMPACTED RUST
L	LOWER	LAT BR	LATERAL BRACING	LT	LIGHT
N	NORTH	ℙ	PLATE	LB	LOOSE BOLT
S	SOUTH	SIP	STAY-IN-PLACE FORM	MAX	MAXIMUM
SYM	SYMMETRICAL	SL	SECTION LOSS	MIN	MINIMUM
U/S	UNDERSIDE	STIFF	STIFFENER	MED	MEDIUM
U	UPPER	STR	STRINGER	MB	MISSING BOLT
VERT	VERTICAL	JT	JOINT	PITT	PITTING
W	WEST			REM	REMAINING
				HR	HEAVY RUST
				MR	MEDIUM RUST
				LR	LIGHT RUST
				TYP	TYPICAL
				V	VISUAL CHECK
				✓	CHECKED, OK

LEGEND

OR SPALL	SPALLED AREA
OR H	HOLLOW SOUNDING AREA (DELAMINATION)
OR MC	MAP CRACKED AREA
OR HC	HONEYCOMBED AREA
OR SCALE	SCALED AREA
OR PATCH	PATCHED AREA
C2-D10-2	PHOTO REFERENCE (CAMERA No. 2 DISK 10, PHOTO 2)

TYPICAL TRUSS CONDITIONS

Condition	Description
A	Drain pipe support bracket welded to truss member
B	Up to ½" impacted rust between angles and web plates and/or cover plate
C	Up to ⅛" deep pitting on inside face of gusset plate, up to 1" wide, along the edges of truss member

TYPICAL CONDITIONS	
DEPARTMENT OF THE ARMY NEW ENGLAND DISTRICT CORPS OF ENGINEERS	
SAGAMORE HIGHWAY BRIDGE ROUTINE INSPECTION	
NOTES BY: LICHTENSTEIN CONSULTING ENGINEERS	
JOB #1986	DATE: 3/01
CREW: —	SHEET — OF —

TYPICAL FLOOR SYSTEM CONDITIONS:

Condition:	Description:
AD	- Abrasion dust between stringer connection angle and floorbeam
T	- 7/8" ϕ blank holes, 12" c/c in top flange, full length of stringer
U	- Intermittent tack weld between interior sidewalk stringer bottom flange and deck pan, full length
12 V	- Utility bracket welded to floorbeam web
W	- Impacted rust between base of stringer web and floorbeam stiffener angle
X	- 1½" × ¼" plate welded to floorbeam bottom flange angle vertical leg under catwalk access hole

(CONTINUED ON NEXT 2 PAGES)

TYPICAL CONDITIONS	
DEPARTMENT OF THE ARMY NEW ENGLAND DISTRICT CORPS OF ENGINEERS	
SAGAMORE HIGHWAY BRIDGE ROUTINE INSPECTION	
NOTES BY: LICHTENSTEIN CONSULTING ENGINEERS	
JOB #1986	DATE: 3/01
CREW: —	SHEET — OF —

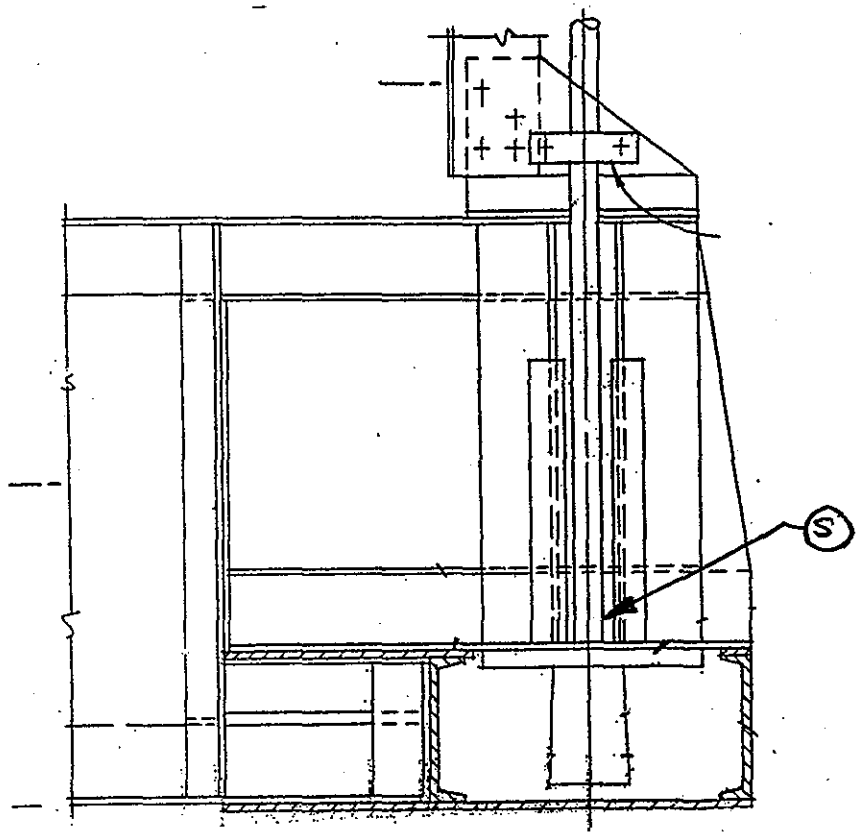

SPAN 1

FLBM — E/W N/S FACE

NOTES: TYP. Cond. (S) - Med-Hvy Rust on FB Web behind cable with Losses to Rivets or bolts as noted, and up to '16" Loss on vertical leg of FB bottom FL ∡.

LWR CABLE HANGER	EL
DEPARTMENT OF THE ARMY NEW ENGLAND DISTRICT CORPS OF ENGINEERS	
SAGAMORE HIGHWAY BRIDGE ROUTINE INSPECTION	
NOTES BY: LICHTENSTEIN CONSULTING ENGINEERS	
JOB #1986	DATE: 4/4/01
CREW: SD, EL, SP	SHEET 9 OF 9

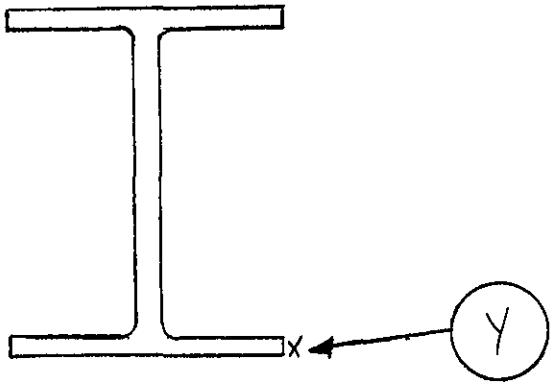

TYPICAL STRINGER

NOTES:

TYP. COND. (Y) - Pitting, full height of edge of bottom flange. Depth as noted.

FLOOR SYSTEM	
DEPARTMENT OF THE ARMY NEW ENGLAND DISTRICT CORPS OF ENGINEERS	
SAGAMORE HIGHWAY BRIDGE ROUTINE INSPECTION	
NOTES BY: LICHTENSTEIN CONSULTING ENGINEERS	
JOB #1986	DATE: 3/01
CREW: —	SHEET — OF —

I. TRUSS MEMBERS

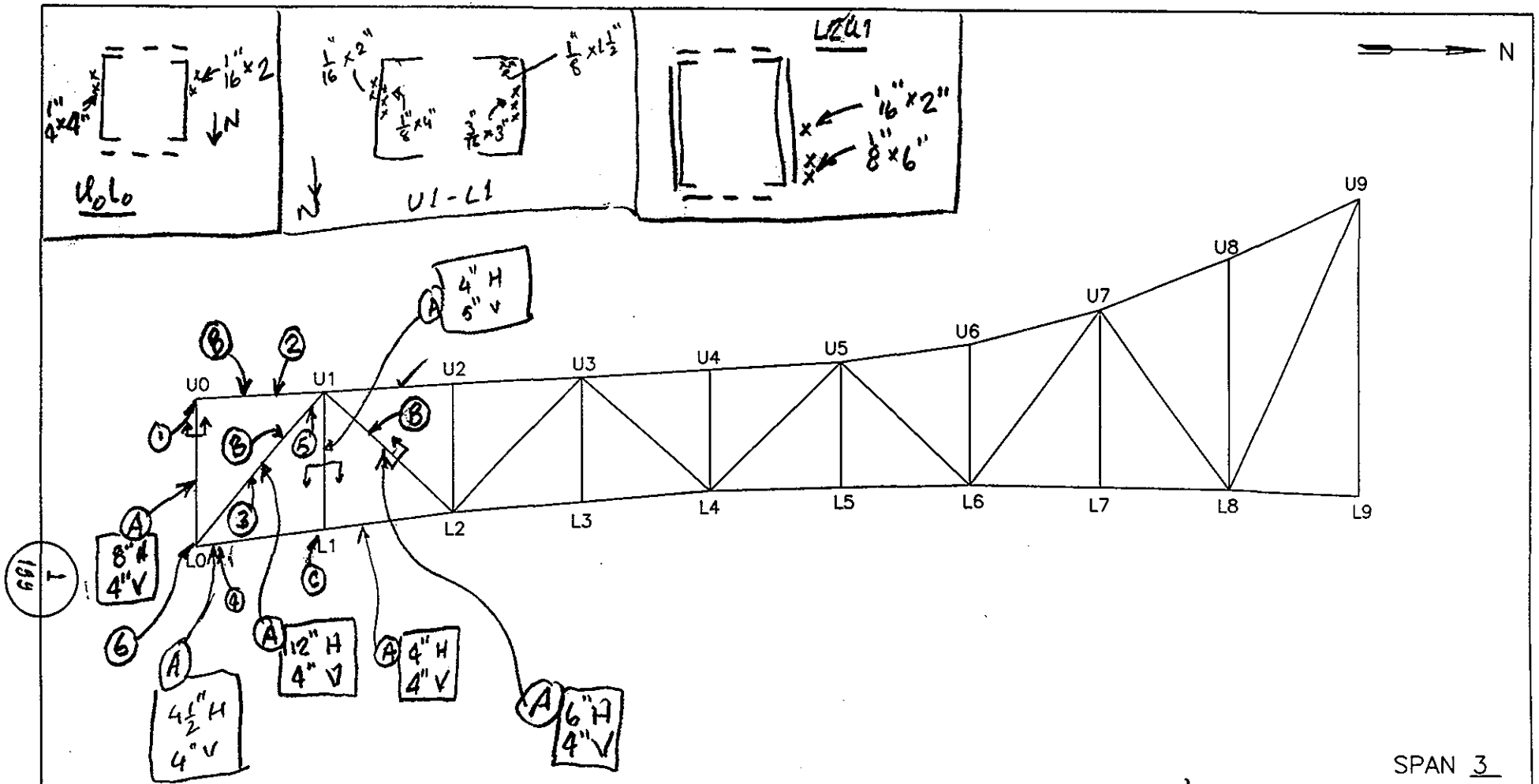

SPAN 3

W TRUSS E ELEVATION

NOTES:

1. (1R) UP TO 1" THICK BTWN EXT. VERT. GUSS PL & TOP CHORD
2. 8"x5" PITTING ON EXT. FACE OF W. WEB
3. " " " " " E. "
4. 8"x2" " " " " " "
5. 8" Ø BLANK HOLE IN BOT FL OF E. E
6. AREAS OF 8"x 6" Ø PITTING ON VERT. GUSS. PL'S @ JT.

TRUSS ELEVATION EL	
DEPARTMENT OF THE ARMY NEW ENGLAND DISTRICT CORPS OF ENGINEERS	
SAGAMORE HIGHWAY BRIDGE ROUTINE INSPECTION	
NOTES BY: LICHTENSTEIN CONSULTING ENGINEERS	
JOB #1986	DATE: 3·26·01
CREW: EL, AP	SHEET 1 OF 1

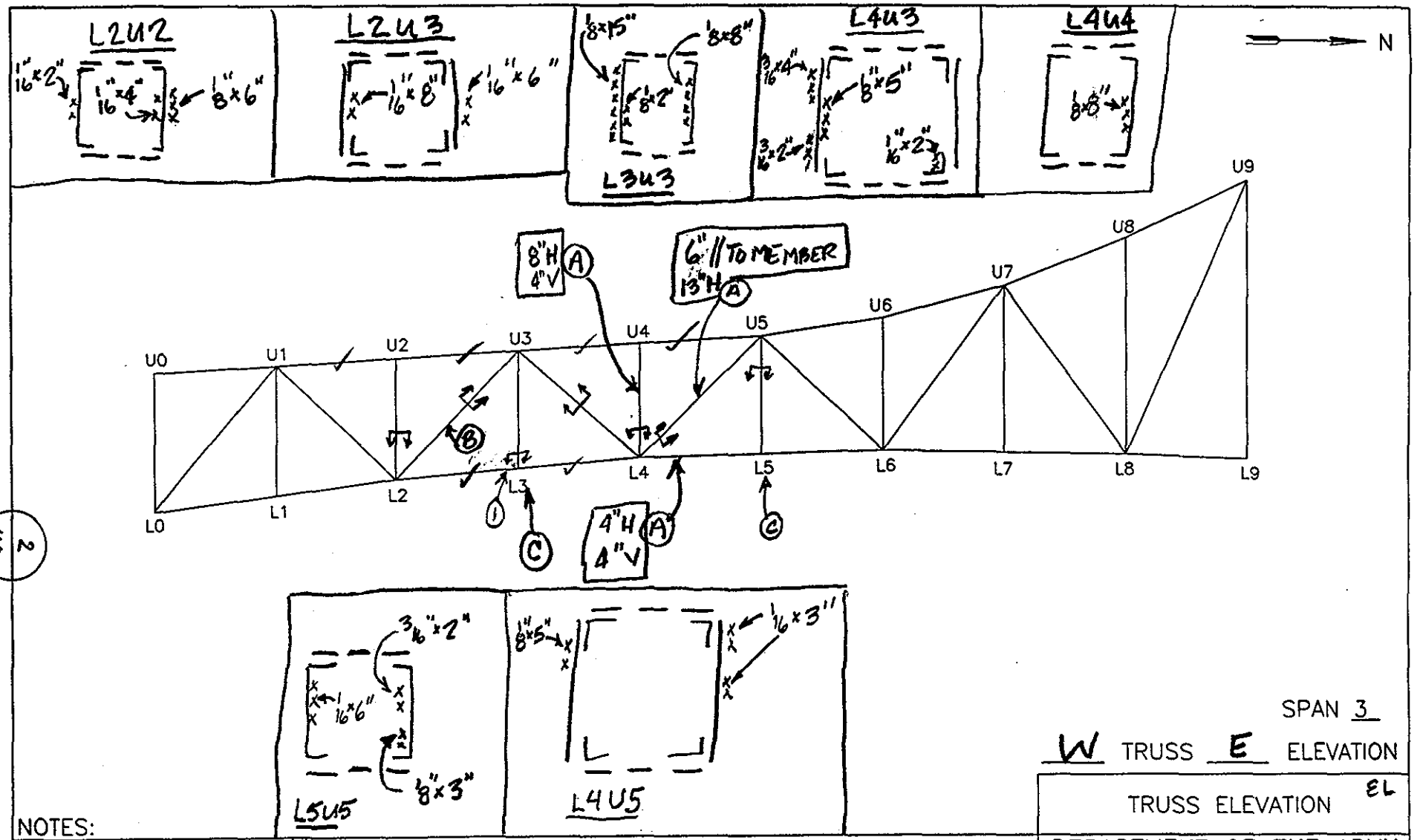

SPAN 3

W TRUSS E ELEVATION

NOTES:

① 1/8" OF PITTING × 1/2" HIGH ON EXT. OF E. WEB ALONG LAT. BRACE CONN & AND 4 CORROSION HOLES IN BOT. BATTEN PL, S. EDGE: 1/2"Ø, 3/4"Ø, 1"Ø + 2"Ø

TRUSS ELEVATION	EL
DEPARTMENT OF THE ARMY NEW ENGLAND DISTRICT CORPS OF ENGINEERS	
SAGAMORE HIGHWAY BRIDGE ROUTINE INSPECTION	
NOTES BY: LICHTENSTEIN CONSULTING ENGINEERS	
JOB #1986	DATE: 3·28·01
CREW: EL, AP	SHEET 1 OF 1

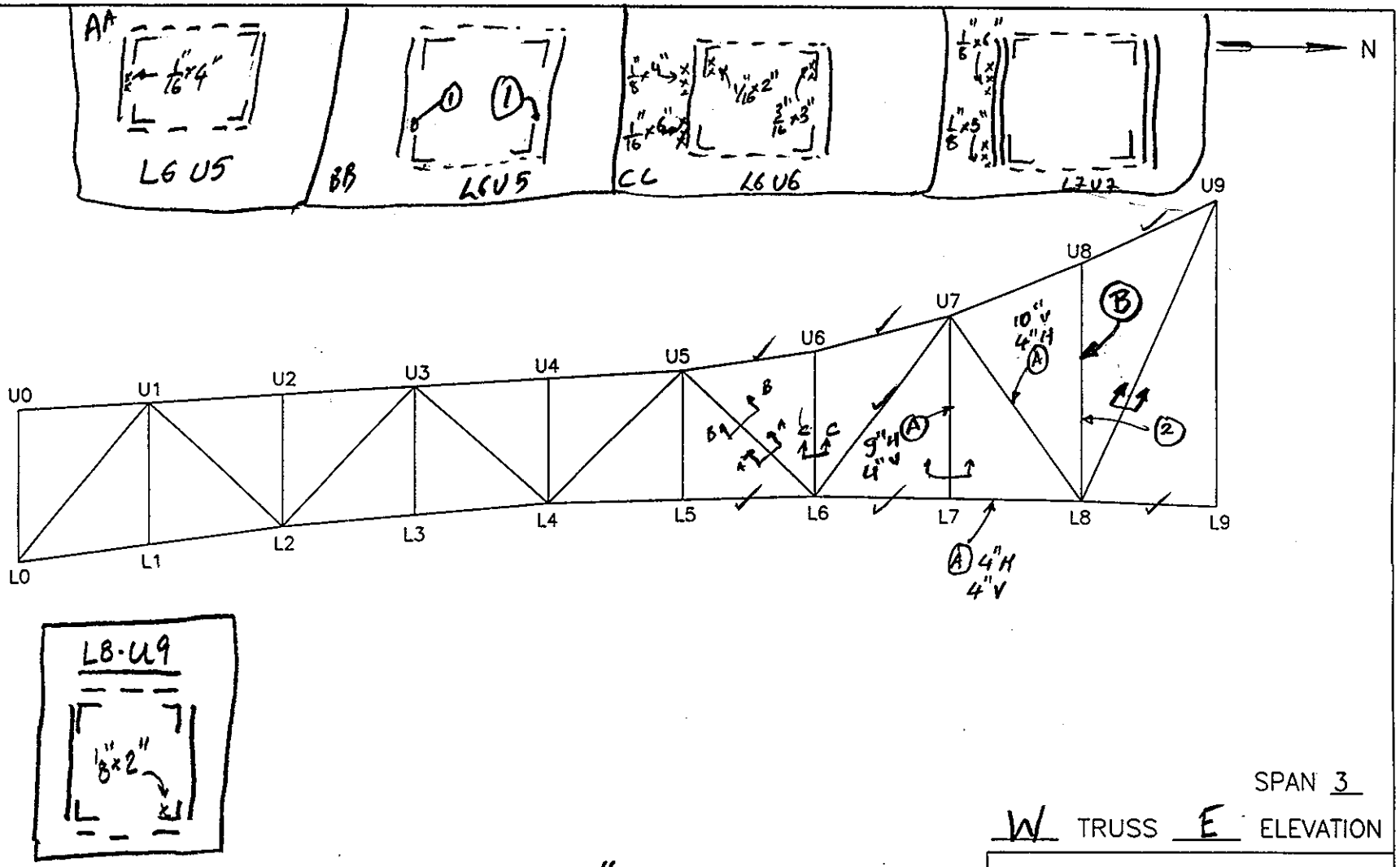

3
199

SPAN 3

W TRUSS E ELEVATION

NOTES: (1) ANGLE LEG BENT @ 18" LONG × 1/8"
(2) 1/8"×6" PIT ON EXT. OF EAST WEB

TRUSS ELEVATION EL	
DEPARTMENT OF THE ARMY NEW ENGLAND DISTRICT CORPS OF ENGINEERS	
SAGAMORE HIGHWAY BRIDGE ROUTINE INSPECTION	
NOTES BY: LICHTENSTEIN CONSULTING ENGINEERS	
JOB #1986	DATE: 3.29.01
CREW: EL, AP	SHEET 2 OF 3

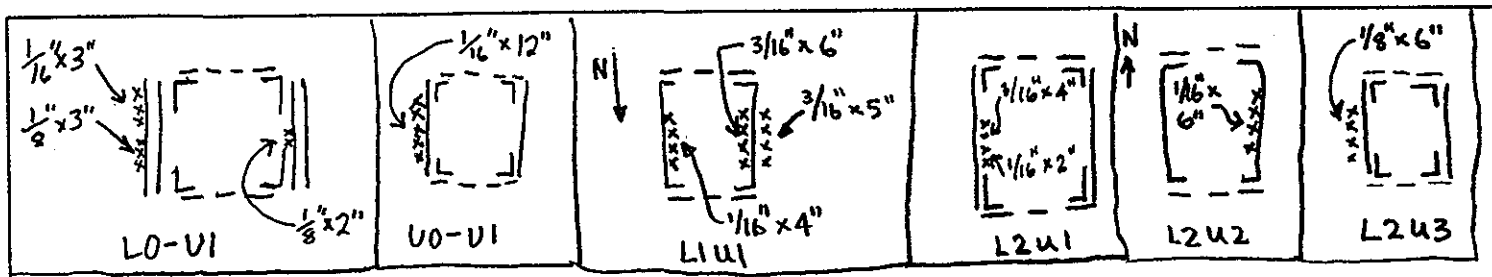

N

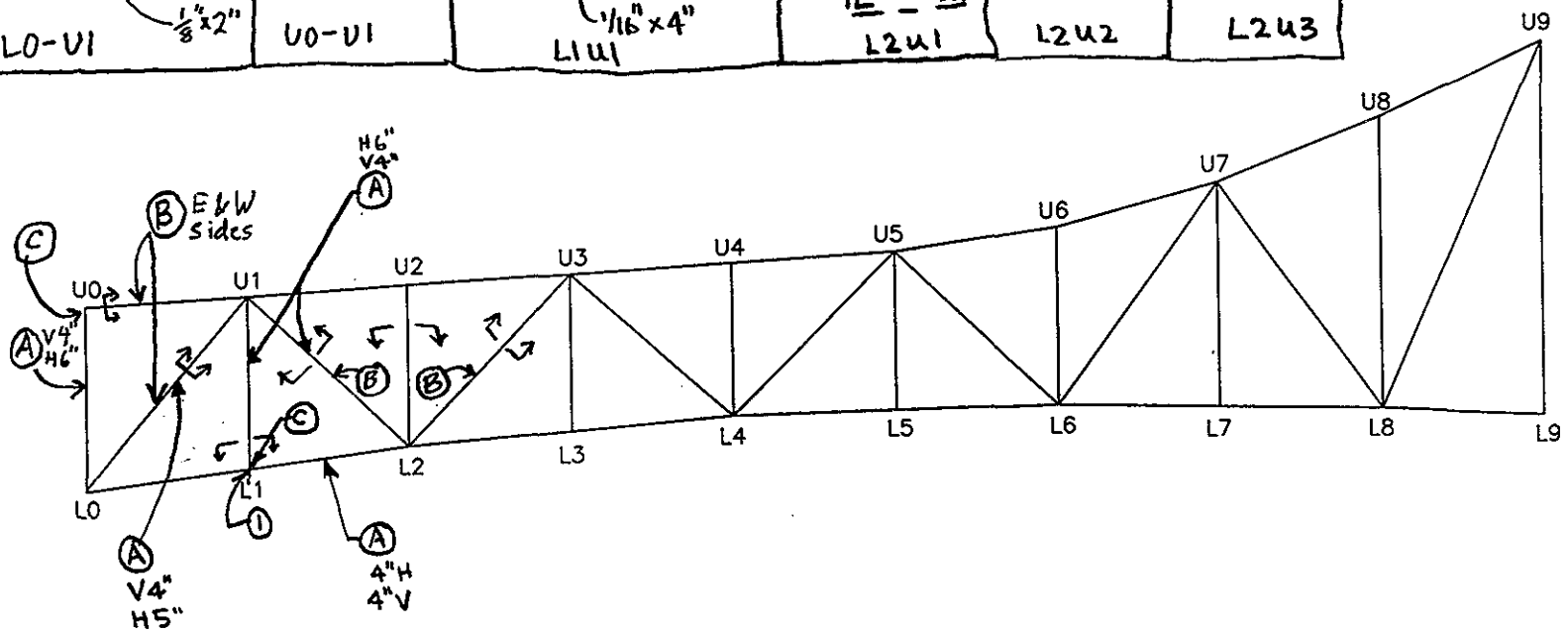

SPAN 3

E TRUSS E ELEVATION

NOTES: ① 100% SL x up to 2"H x FL of bot. Chord Stiff. Pl along bot edge (C2-D3-1)

TRUSS ELEVATION EL

DEPARTMENT OF THE ARMY
NEW ENGLAND DISTRICT CORPS OF ENGINEERS

SAGAMORE HIGHWAY BRIDGE
ROUTINE INSPECTION

NOTES BY: LICHTENSTEIN
CONSULTING ENGINEERS

JOB #1986 | DATE: 3/26/01

CREW: SD, SP | SHEET 1 OF 2

4
199

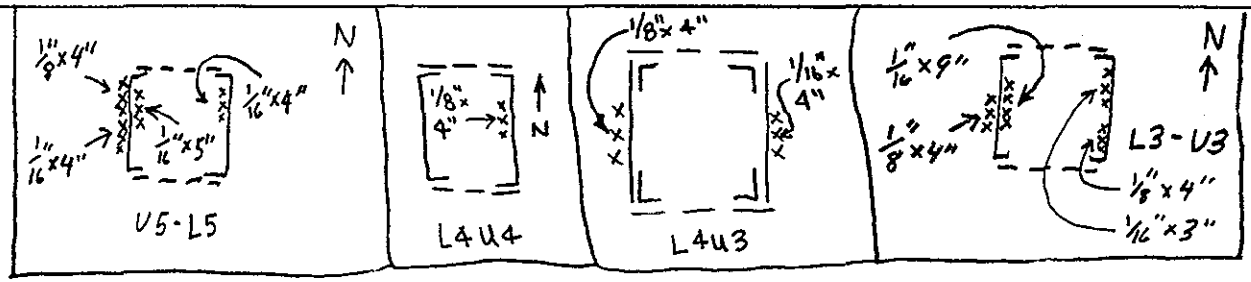

N

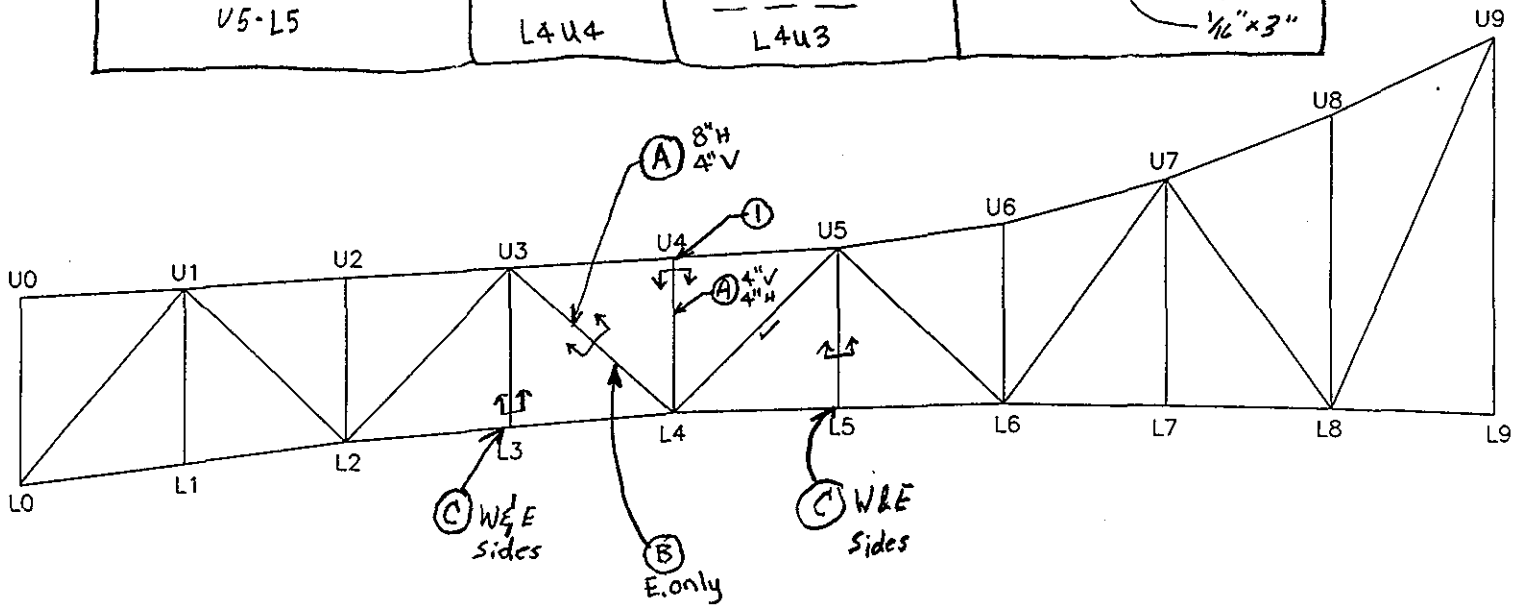

5
199

SPAN 3

E TRUSS E ELEVATION

NOTES:

1 1/2" IR btwn E.Channel Web & W.Face of E Gusset PL

TRUSS ELEVATION EL	
DEPARTMENT OF THE ARMY NEW ENGLAND DISTRICT CORPS OF ENGINEERS	
SAGAMORE HIGHWAY BRIDGE ROUTINE INSPECTION	
NOTES BY: LICHTENSTEIN CONSULTING ENGINEERS	
JOB #1986	DATE: 3/28/01
CREW: SD, SP	SHEET 1 OF 3

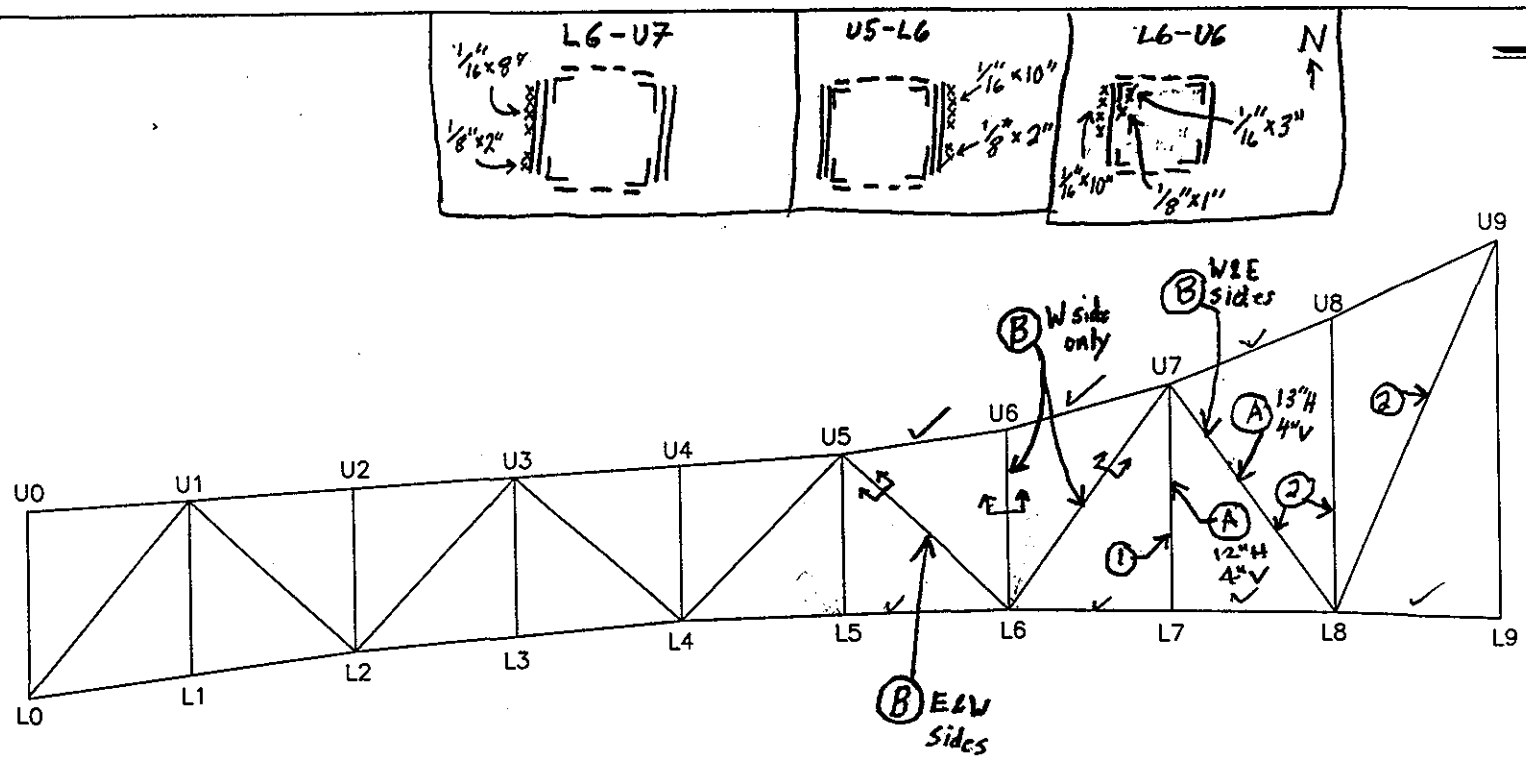

SPAN 3

E TRUSS E ELEVATION

NOTES: ① 1/8"x4" & 1/16"x8" on West Web PL (PITTING)
② Random locations of 1/4" IR bet leg of ∠ and PL for FL

→ Areas of Pitting, up to 1/4" dp, on lacing bars throughout span, E&W. w/ locations of 100% section loss on edge of bar.

TRUSS ELEVATION	
DEPARTMENT OF THE ARMY NEW ENGLAND DISTRICT CORPS OF ENGINEERS	
SAGAMORE HIGHWAY BRIDGE ROUTINE INSPECTION	
NOTES BY: LICHTENSTEIN CONSULTING ENGINEERS	
JOB #1986	DATE: 3/29/01
CREW: SP, SD	SHEET 1 OF 3

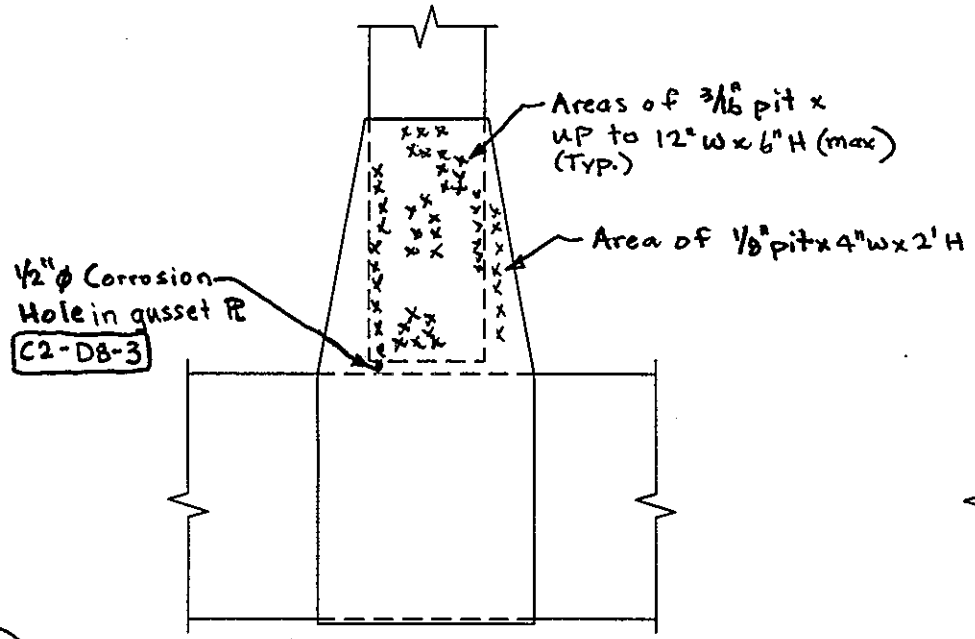

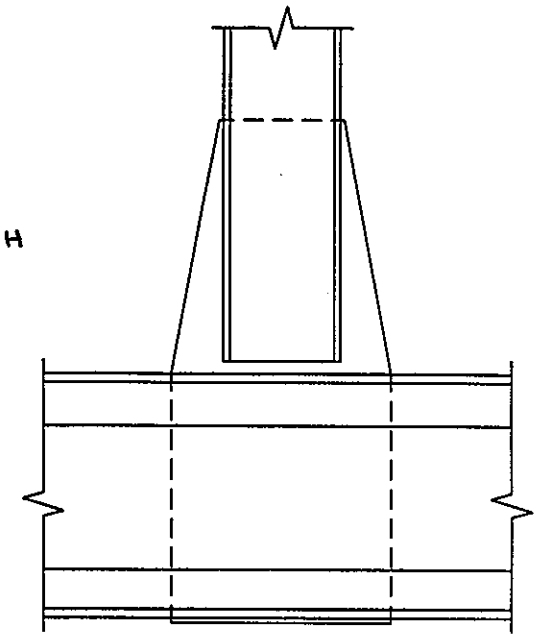

W ELEV.

PANEL POINT L7

___ ELEV. INBOARD FACE

PANEL POINT ____

SPAN 3 E TRUSS

NOTES:

TRUSS JOINT EL	
DEPARTMENT OF THE ARMY NEW ENGLAND DISTRICT CORPS OF ENGINEERS	
SAGAMORE HIGHWAY BRIDGE ROUTINE INSPECTION	
NOTES BY: LICHTENSTEIN CONSULTING ENGINEERS	
JOB #1986	DATE: 3/29/01
CREW: SD, SP	SHEET 3 OF 3

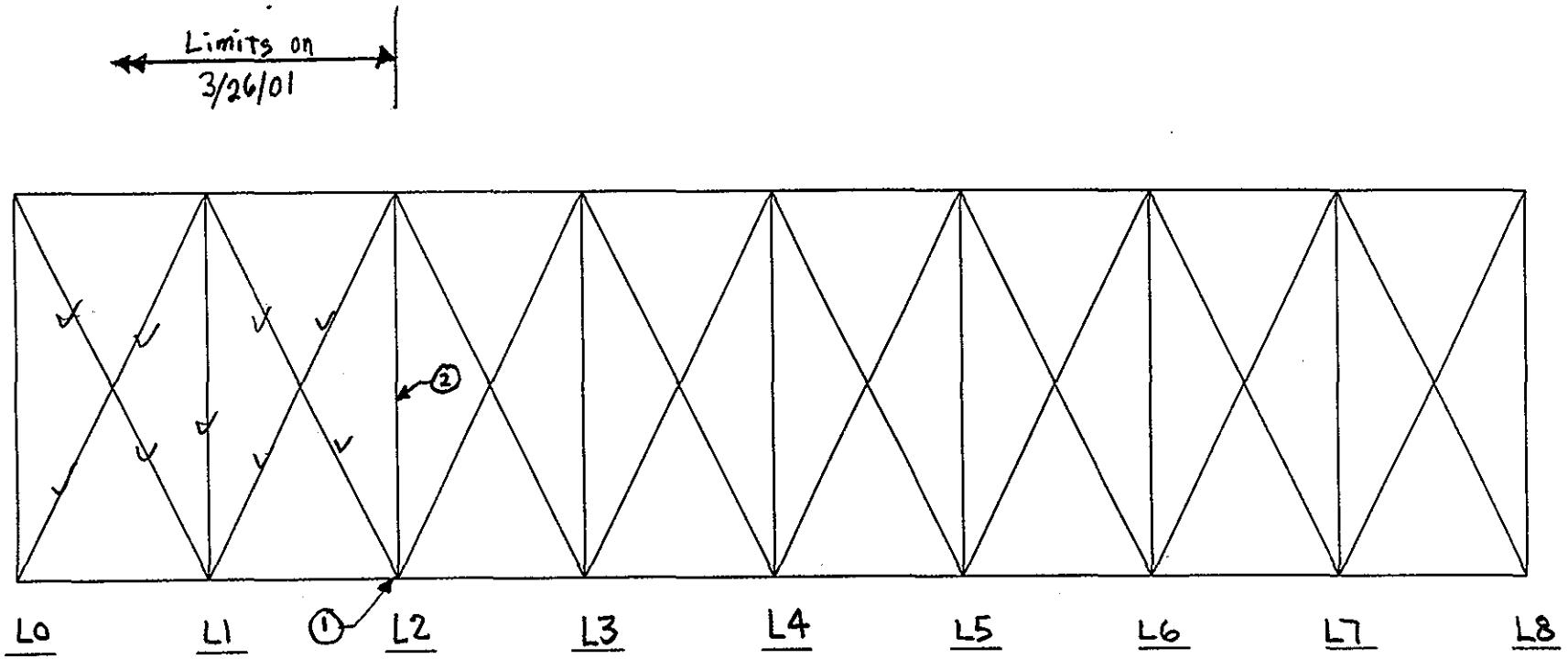

SPAN 3
bott. CHORD BRACING

NOTES: ① 1"ϕ Hole in Top Gusset PL C2-D3-2
② Random Areas of up to 3/16" pitting x up to 6"H on web or FW. of [flange x F.L.

TRUSS BRACING EL

DEPARTMENT OF THE ARMY
NEW ENGLAND DISTRICT CORPS OF ENGINEERS

SAGAMORE HIGHWAY BRIDGE
ROUTINE INSPECTION

NOTES BY: LICHTENSTEIN
CONSULTING ENGINEERS

JOB #1986	DATE: 3/26/01
CREW: SD, SP	SHEET 2 OF 2

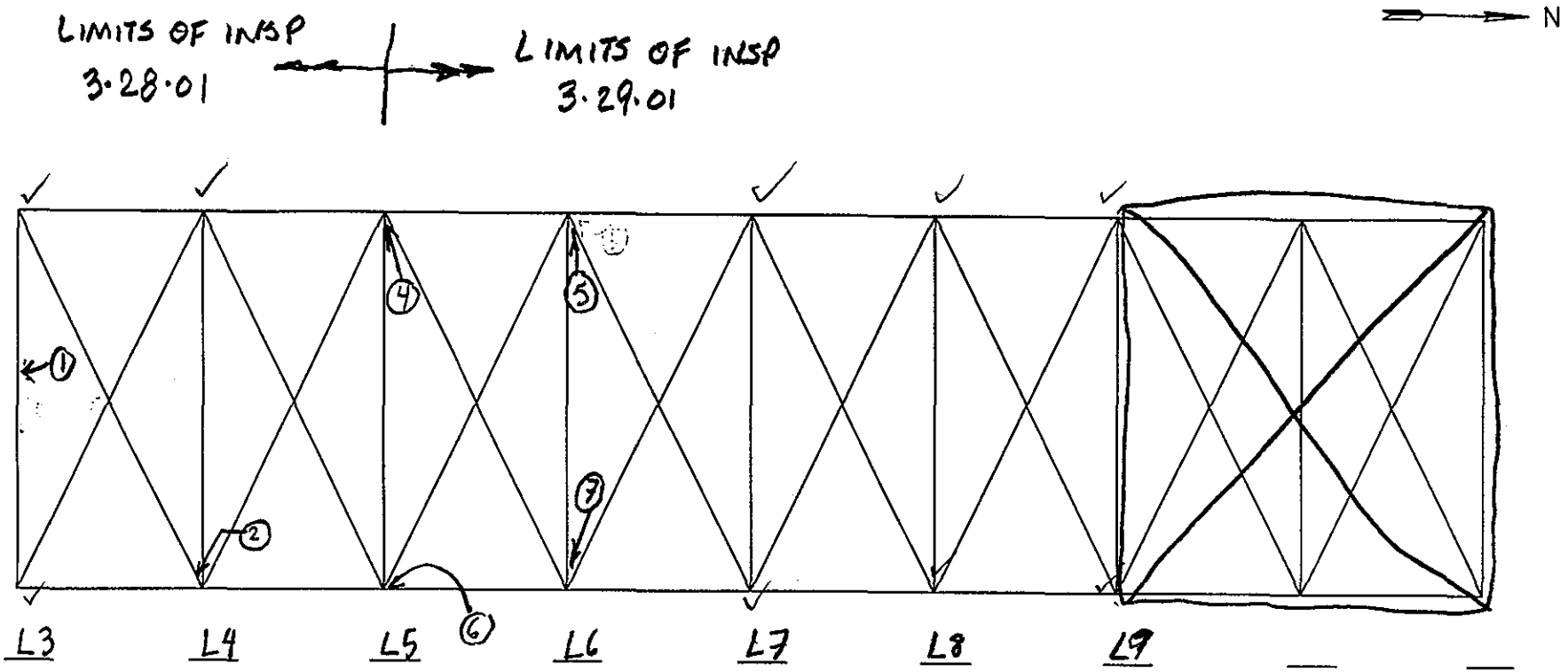

SPAN 3

Bot CHORD BRACING

NOTES:
1. ½ SF paint holiday
2. 2"Lx1"H Hole in vert Leg of bot ⅓ of x bracing [C2-D6-5]
3. Random Areas of 1/8" pitting thru out on all surfaces (Typ. Cond.)
4. Broken rivet on vert leg of & connecting horiz lat. gusset PL to web of truss member [C2-D7-1]
5. 8"Φ corrosion hole in bot horiz gusset PL nr conn [C1-D5-9]
6. ½"Φ Hole in top horiz (lat.) gusset PL
7. 3"Lx1"H hole in N vert gusset PL of vert x bracing [C2-D8-2]

TRUSS BRACING	EL
DEPARTMENT OF THE ARMY NEW ENGLAND DISTRICT CORPS OF ENGINEERS	
SAGAMORE HIGHWAY BRIDGE ROUTINE INSPECTION	
NOTES BY: LICHTENSTEIN CONSULTING ENGINEERS	
JOB #1986	DATE: 3/28/01
CREW: SD, SP	SHEET 2 OF 3

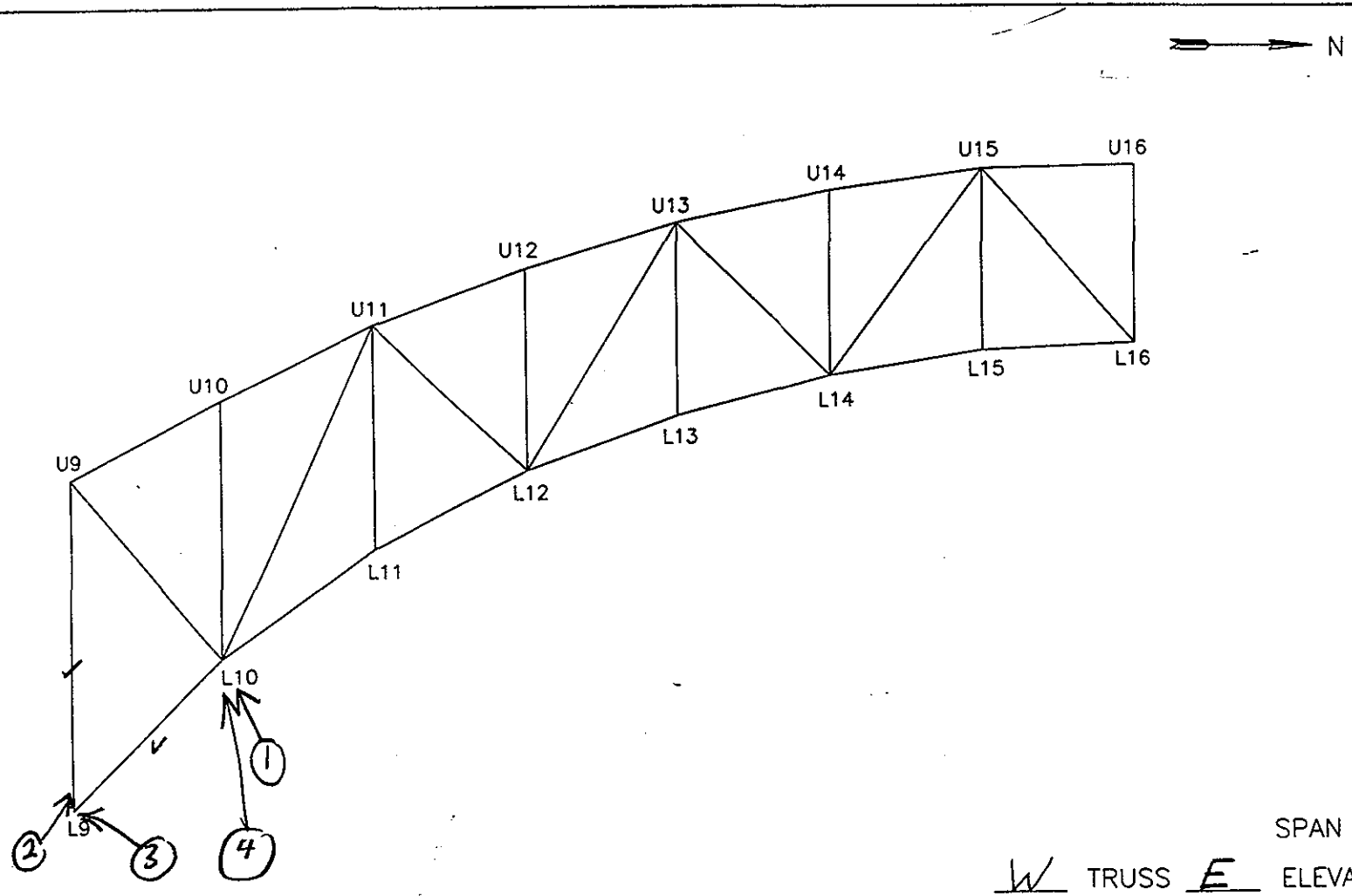

SPAN 1

W TRUSS E ELEVATION

NOTES:
1. Random location 100% section loss x 2" max on truss bot. chord bracing
2. 1/8" pit x 12" W on ext E face
3. Corrosion holes 1" x 4" and 1" ϕ in top horiz conn PL for bot chord bracing
4. 3/16" pit x 2' H x 6" W on E face of E vert PL [C2-D21-1] at joint

TRUSS ELEVATION EL	
DEPARTMENT OF THE ARMY NEW ENGLAND DISTRICT CORPS OF ENGINEERS	
SAGAMORE HIGHWAY BRIDGE ROUTINE INSPECTION	
NOTES BY: LICHTENSTEIN CONSULTING ENGINEERS	
JOB #1986	DATE: 4/9/01
CREW: SP, EL, SD	SHEET 6 OF 10

10
C93

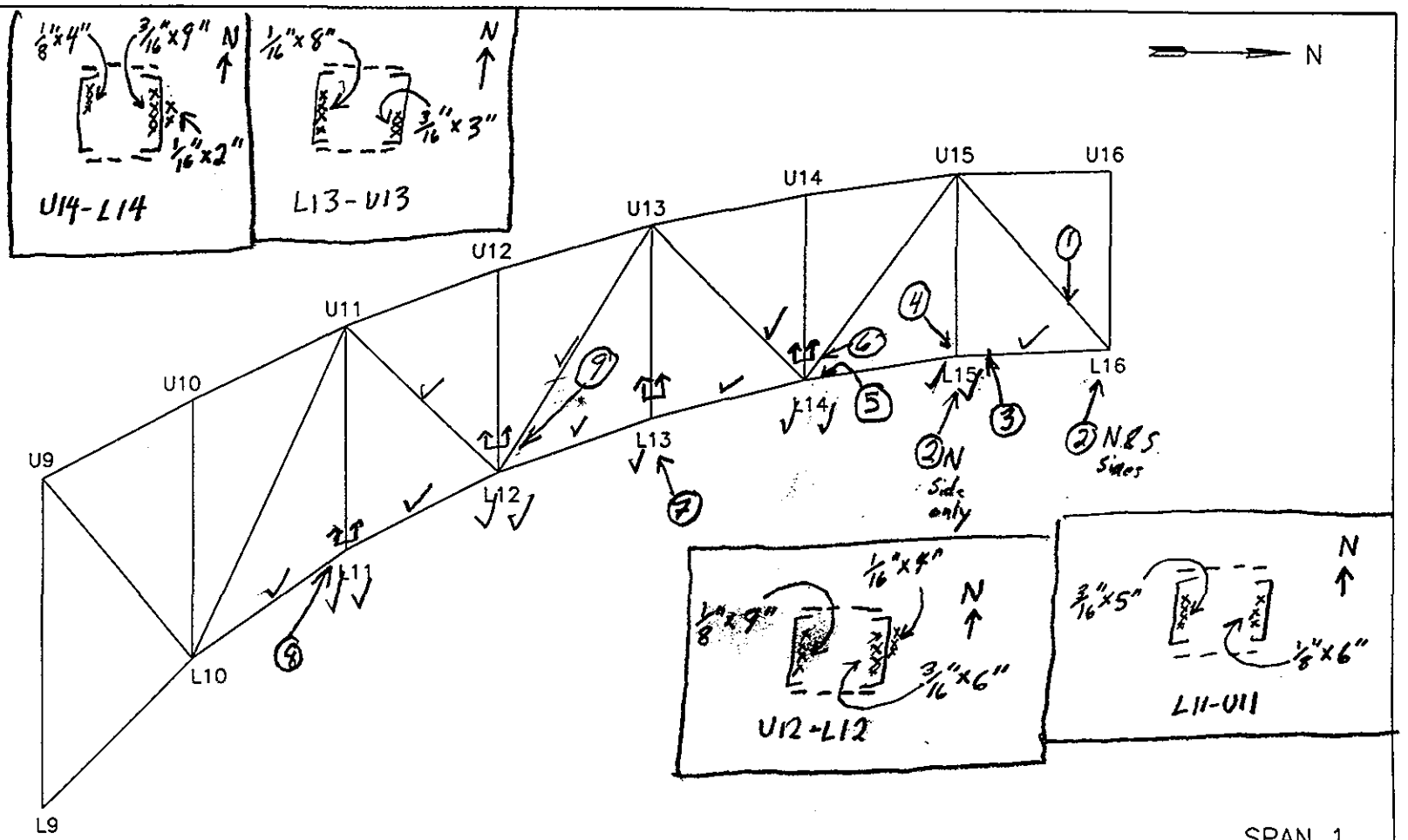

SPAN 1

W TRUSS E ELEVATION

NOTES:
1. 1/8"x5" pitting on int of E web
2. Areas of poor quality weld in cable anchor weldment
3. 1"x2" corrosion hole in bot batten PL of L15-L16 at L15
4. 1/8"x1" pit on int face of E.C N. FL
5. Several corrosion holes in top batten plate L14-L15 at L14 [CI-D8-7]
6. Hvy pitting w/ 1"x2" corrosion hole in int diaphragm
7. 4"x3" paint holiday on top cable socket
8. 1"x2" corr. hole in bot batten PL
9. Hvy pitting w/ multiple corrosion holes @ int diaphragm [CI-D9-1]

TRUSS ELEVATION 62

DEPARTMENT OF THE ARMY
NEW ENGLAND DISTRICT CORPS OF ENGINEERS

SAGAMORE HIGHWAY BRIDGE
ROUTINE INSPECTION

NOTES BY: LICHTENSTEIN
CONSULTING ENGINEERS

JOB #1986	DATE: 4/5/01
CREW: SP, EL	SHEET 3 OF 4

11

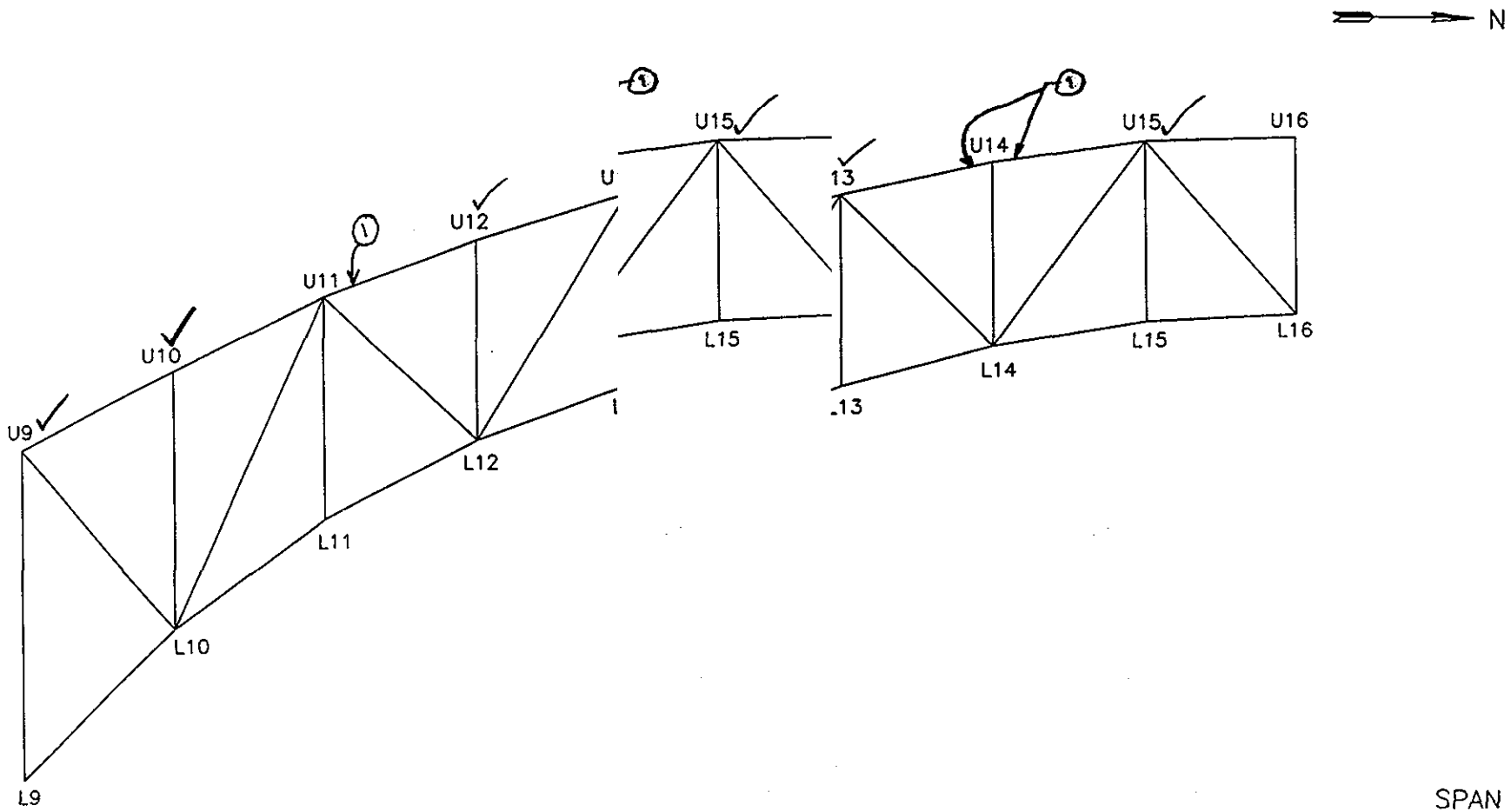

SPAN 1

W T

W TRUSS E ELEVATION

① Safety tie wire on Clevis pin missing @ safhorage to truss.

ety cable anchorage

TRUSS ELEVATION EL

DEPAR
NEW ENG

DEPARTMENT OF THE ARMY
NEW ENGLAND DISTRICT CORPS OF ENGINEERS

SAGAM

SAGAMORE HIGHWAY BRIDGE
ROUTINE INSPECTION

NOTES BY:

NOTES BY: LICHTENSTEIN
CONSULTING ENGINEERS

JOB #1

JOB #1986 DATE: 4/3/07

CREW: S

CREW: SD, SP SHEET 5 OF 6

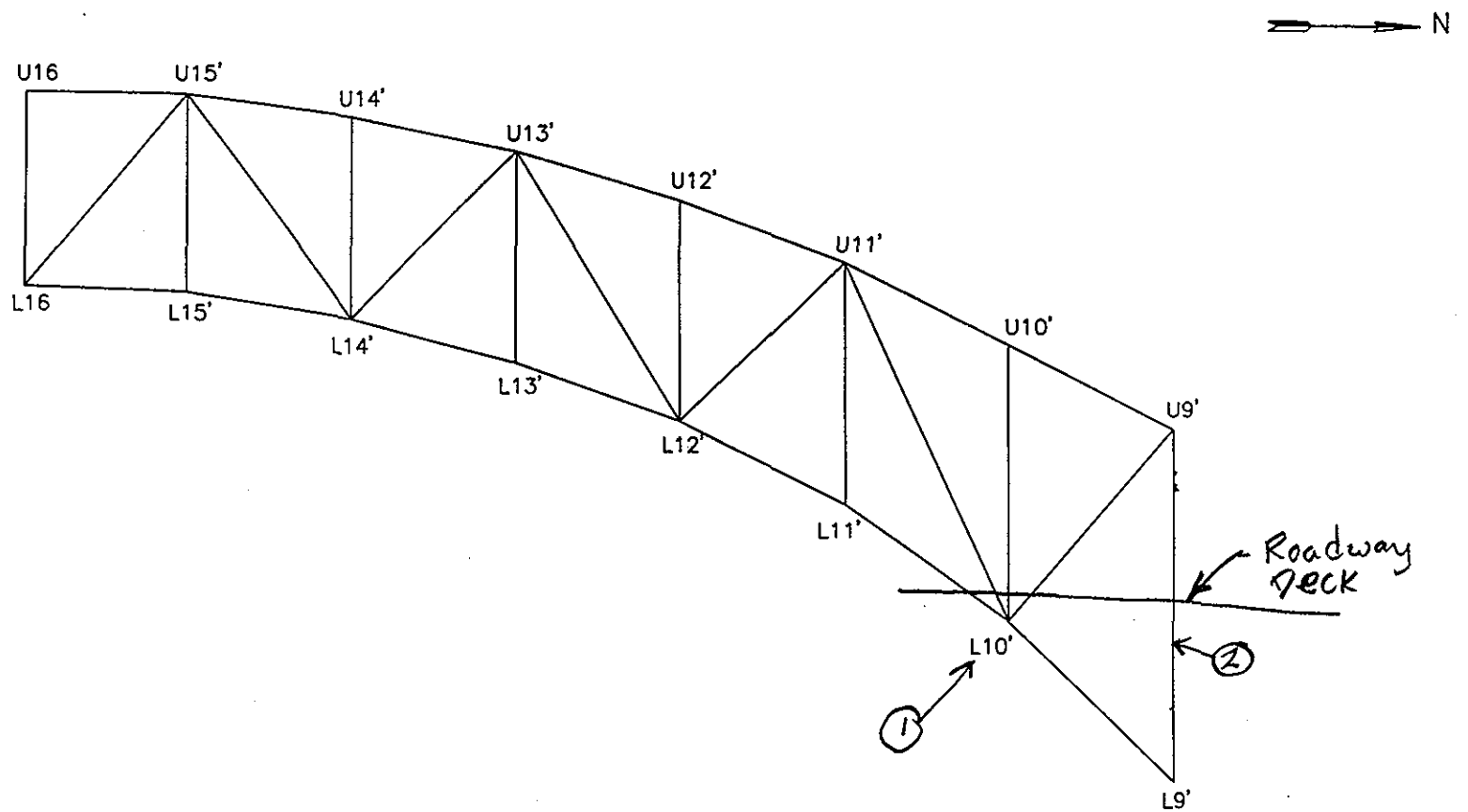

SPAN 1

W TRUSS E ELEVATION

NOTES: (1) Multiple areas of pitting up to 3/16" x 12"ϕ on vert. PL @ jt.
(2) 3/16" x 6" pit on E ext. face

TRUSS ELEVATION EL	
DEPARTMENT OF THE ARMY NEW ENGLAND DISTRICT CORPS OF ENGINEERS	
SAGAMORE HIGHWAY BRIDGE ROUTINE INSPECTION	
NOTES BY: LICHTENSTEIN CONSULTING ENGINEERS	
JOB #1986	DATE: 4/9/01
CREW: SP, EL	SHEET 8 OF 10

13
159

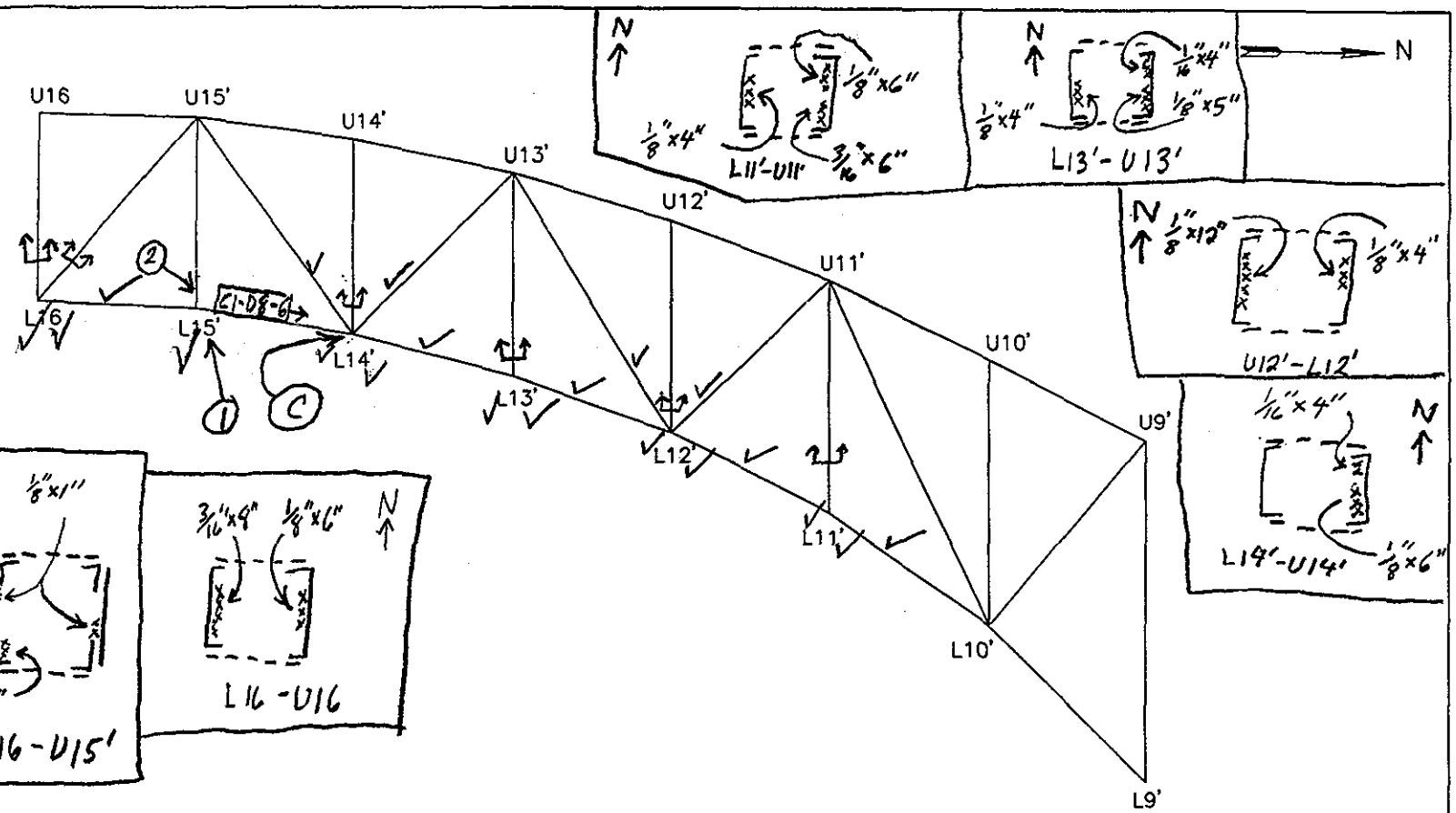

SPAN 1

W TRUSS E ELEVATION

NOTES: ① 2 wires misaligned in cable C1-D8-4
② 1/16" pit x 4" W on int face of PP river to web of C

TRUSS ELEVATION EL	
DEPARTMENT OF THE ARMY NEW ENGLAND DISTRICT CORPS OF ENGINEERS	
SAGAMORE HIGHWAY BRIDGE ROUTINE INSPECTION	
NOTES BY: LICHTENSTEIN CONSULTING ENGINEERS	
JOB #1986	DATE: 4/5/01
CREW: SP, EL	SHEET 1 OF 4

14
199

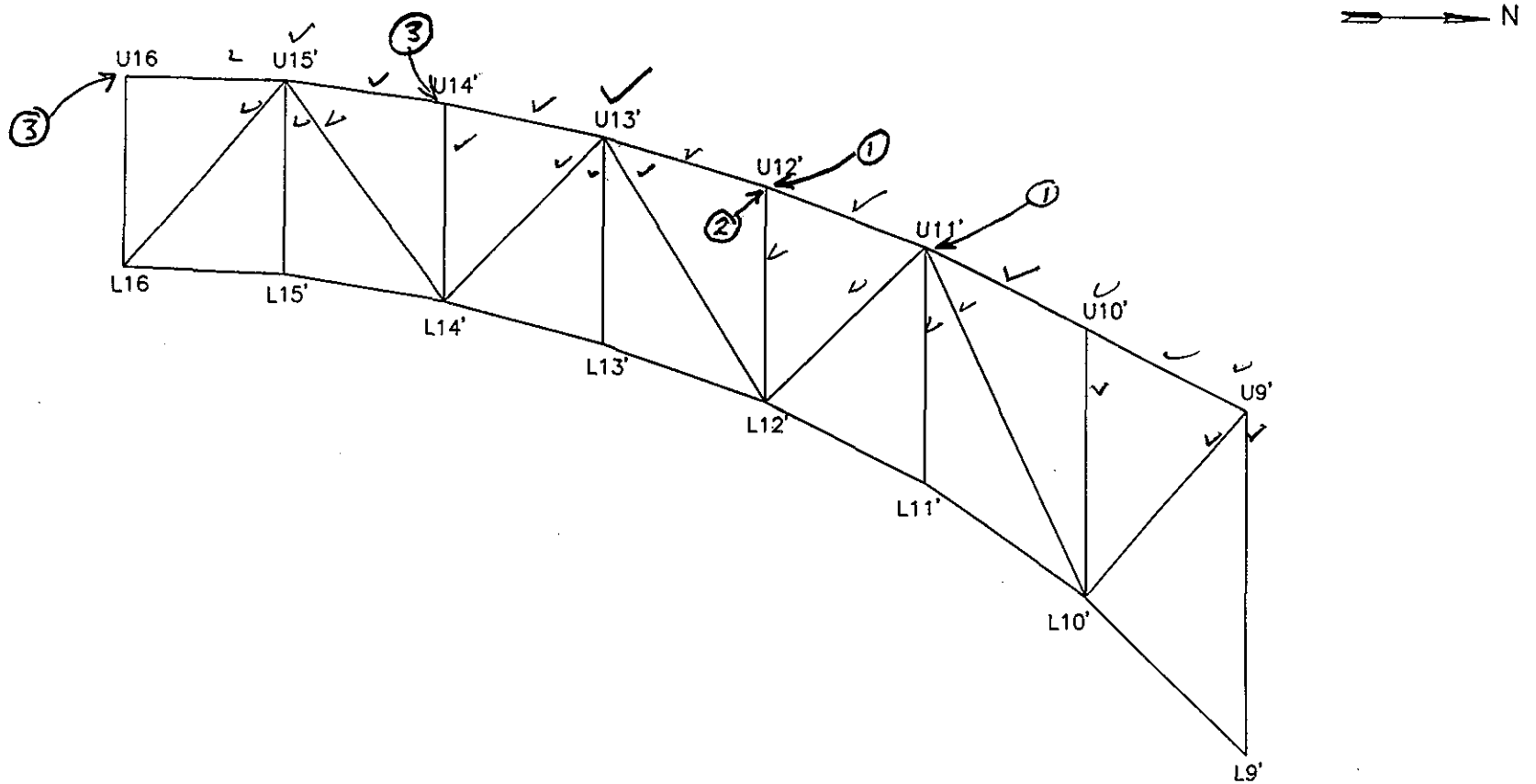

SPAN 1

W TRUSS E ELEVATION

NOTES ① 1/8" pitting 4"Ø on vert. E gusset PL, E face.

② 1/16" pitting x up to 1" W x FH of ~~E~~ Web of Member U13'U12' along edge of Vert Gusset PL.

③ Safety tie wire on Clevis pin missing @ safety Cable anchorage to truss.

TRUSS ELEVATION EL	
DEPARTMENT OF THE ARMY NEW ENGLAND DISTRICT CORPS OF ENGINEERS	
SAGAMORE HIGHWAY BRIDGE ROUTINE INSPECTION	
NOTES BY: LICHTENSTEIN CONSULTING ENGINEERS	
JOB #1986	DATE: 4/3/01
CREW: SD, SP	SHEET 2 OF 6

15
139

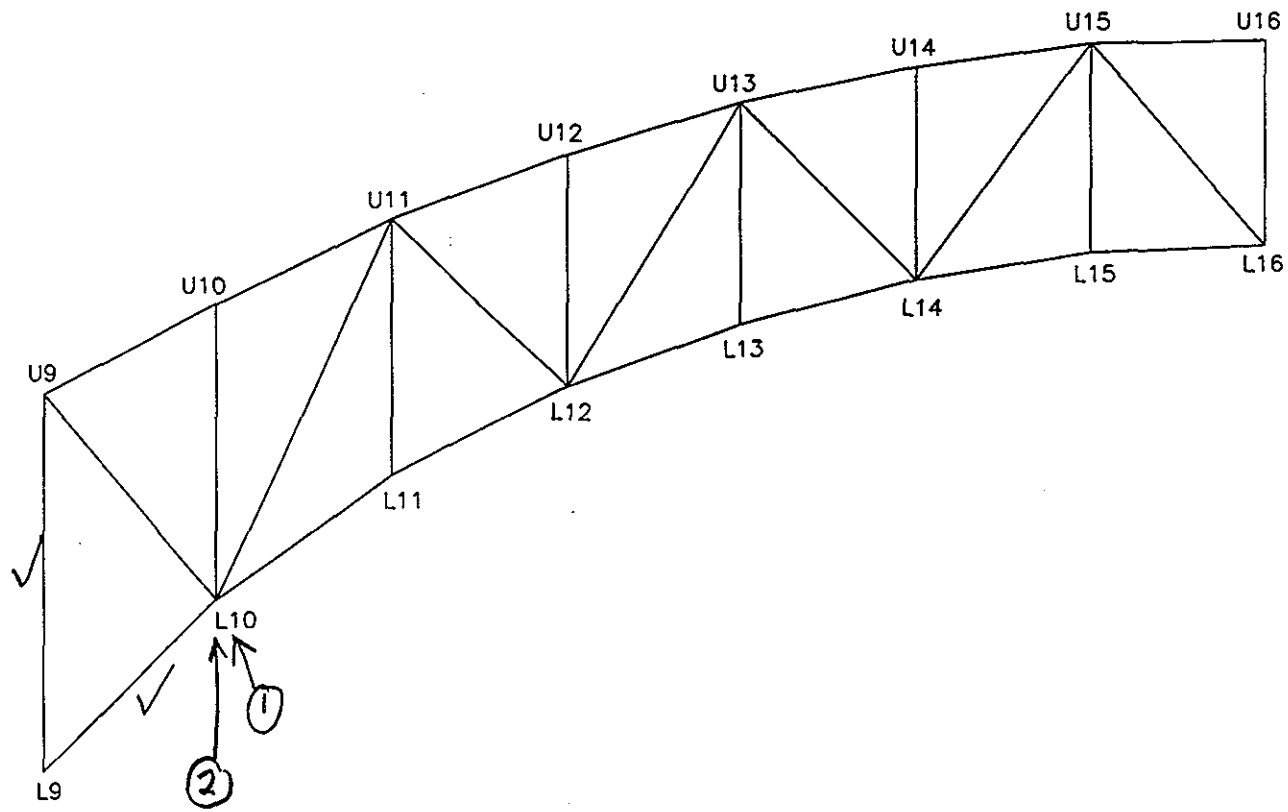

SPAN 1

E TRUSS E ELEVATION

NOTES:
1. Random locations of 100% section loss x 2" max on truss bot chord bracing
2. Multiple areas of pitting up to 3/16" x 8" ϕ on vert PLs at jt

TRUSS ELEVATION EL	
DEPARTMENT OF THE ARMY NEW ENGLAND DISTRICT CORPS OF ENGINEERS	
SAGAMORE HIGHWAY BRIDGE ROUTINE INSPECTION	
NOTES BY: LICHTENSTEIN CONSULTING ENGINEERS	
JOB #1986	DATE: 4/9/01
CREW: SP,EL,SD	SHEET 7 OF 10

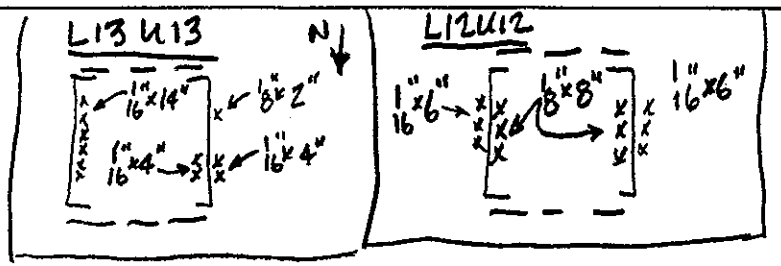

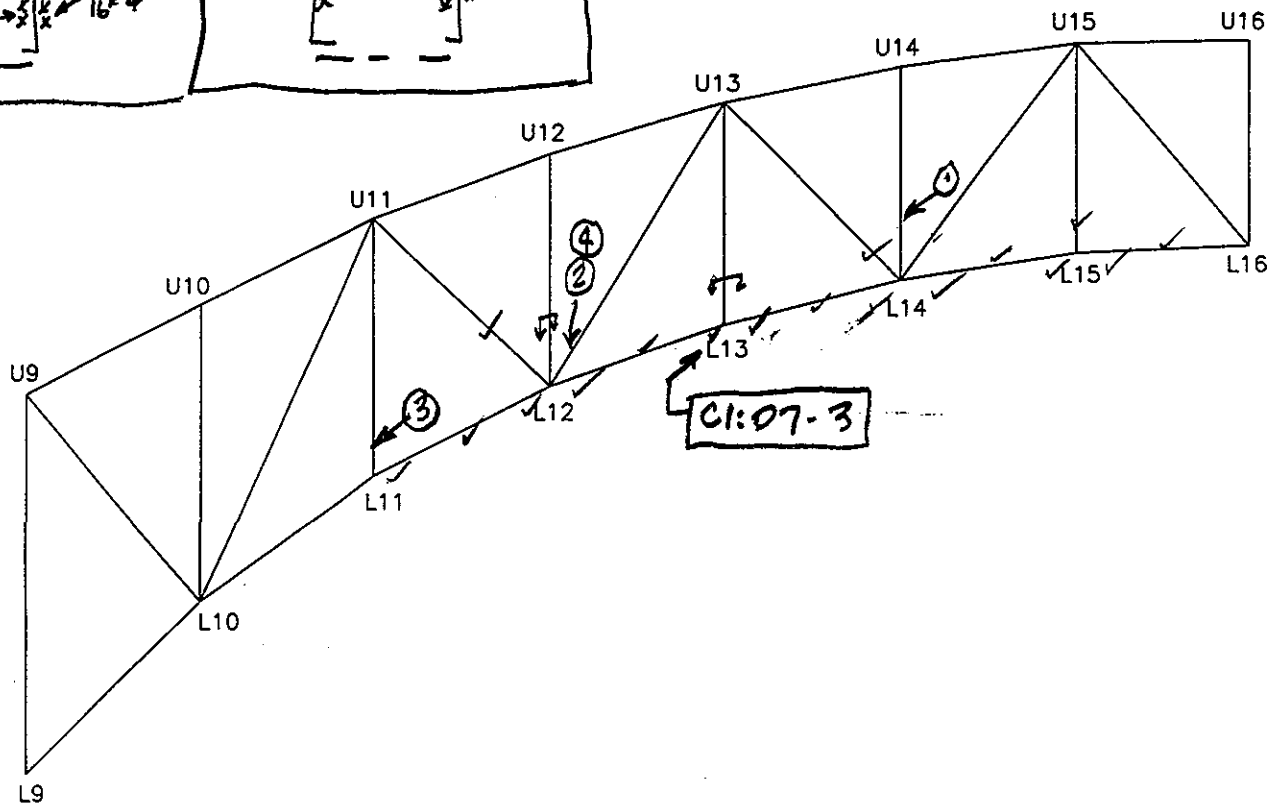

17
109

SPAN 1

E TRUSS E ELEVATION

NOTES:

1. 1/8"x5" PITTING ON E. FACE OF W. C
2. 2" Ø CORROSION HOLE @ BOT EDGE OF INT. DIAPHRAGM; 1/8" PITTING x 3" HIGH ACROSS REMAINING PORTION OF PL BOT. EDGE
3. 1/8"x8" + 1/16"x4" PITTING ON E. FACE OF W. I.
4. 1/4" Ø CORROSION HOLE @ BOT EDGE OF TOP BATTEN PL

TRUSS ELEVATION EL	
DEPARTMENT OF THE ARMY NEW ENGLAND DISTRICT CORPS OF ENGINEERS	
SAGAMORE HIGHWAY BRIDGE ROUTINE INSPECTION	
NOTES BY: LICHTENSTEIN CONSULTING ENGINEERS	
JOB #1986	DATE: 4·3·01
CREW: EL	SHEET 1 OF 2

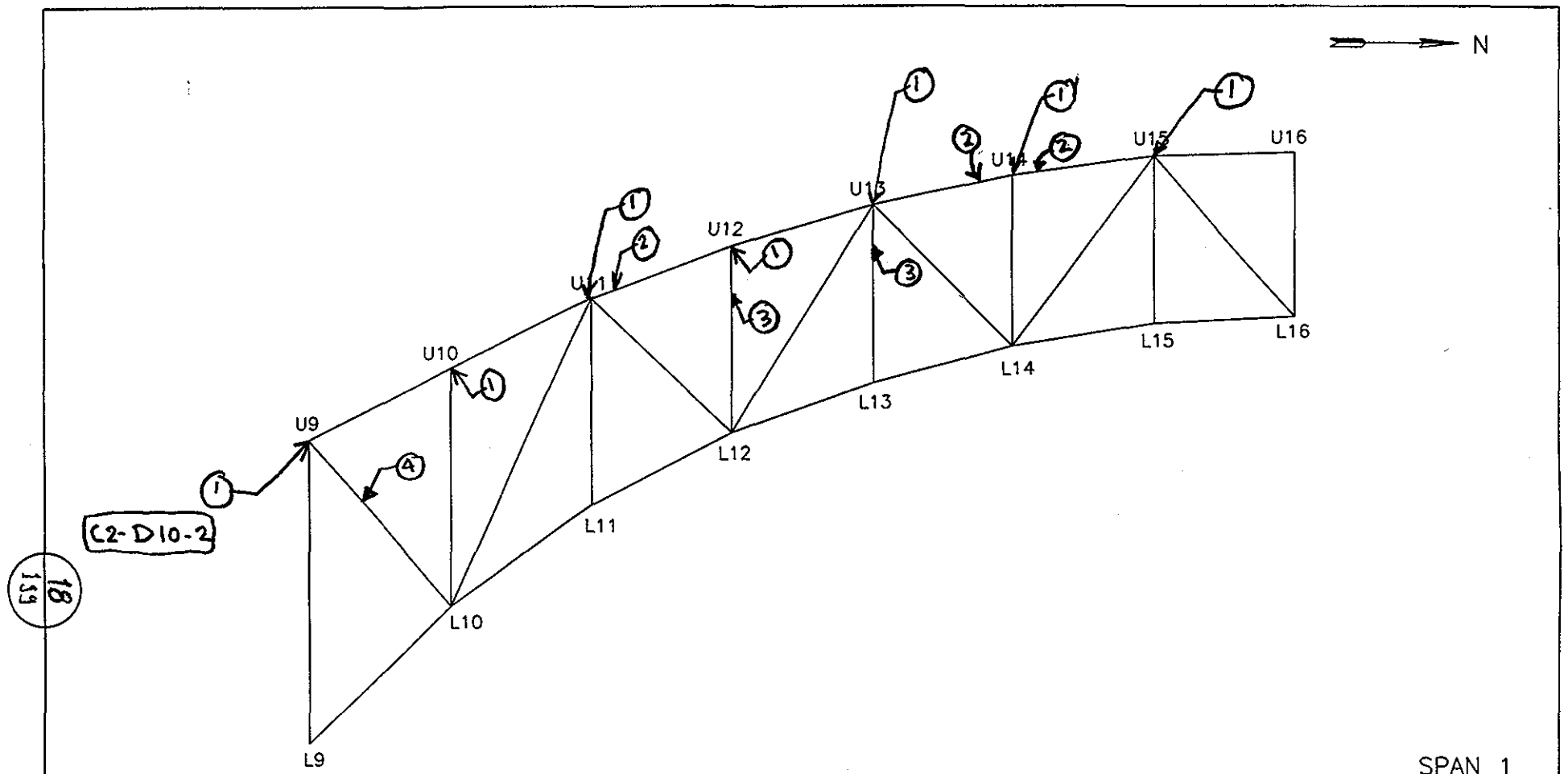

SPAN 1

E TRUSS E ELEVATION

NOTES:
1. PL welded on West Elev. of Top Chord
2. Safety tie wire on Clevis pin missing & safety cable anchorage to truss
3. 1/16" pit x 8" W on W. Face of West Channel.
4. 4"x3" PL welded to W. Elev. of Member L10 U9.

TRUSS ELEVATION EL	
DEPARTMENT OF THE ARMY NEW ENGLAND DISTRICT CORPS OF ENGINEERS	
SAGAMORE HIGHWAY BRIDGE ROUTINE INSPECTION	
NOTES BY: LICHTENSTEIN CONSULTING ENGINEERS	
JOB #1986	DATE: 4/3/01
CREW: SD, SP	SHEET 4 OF 6

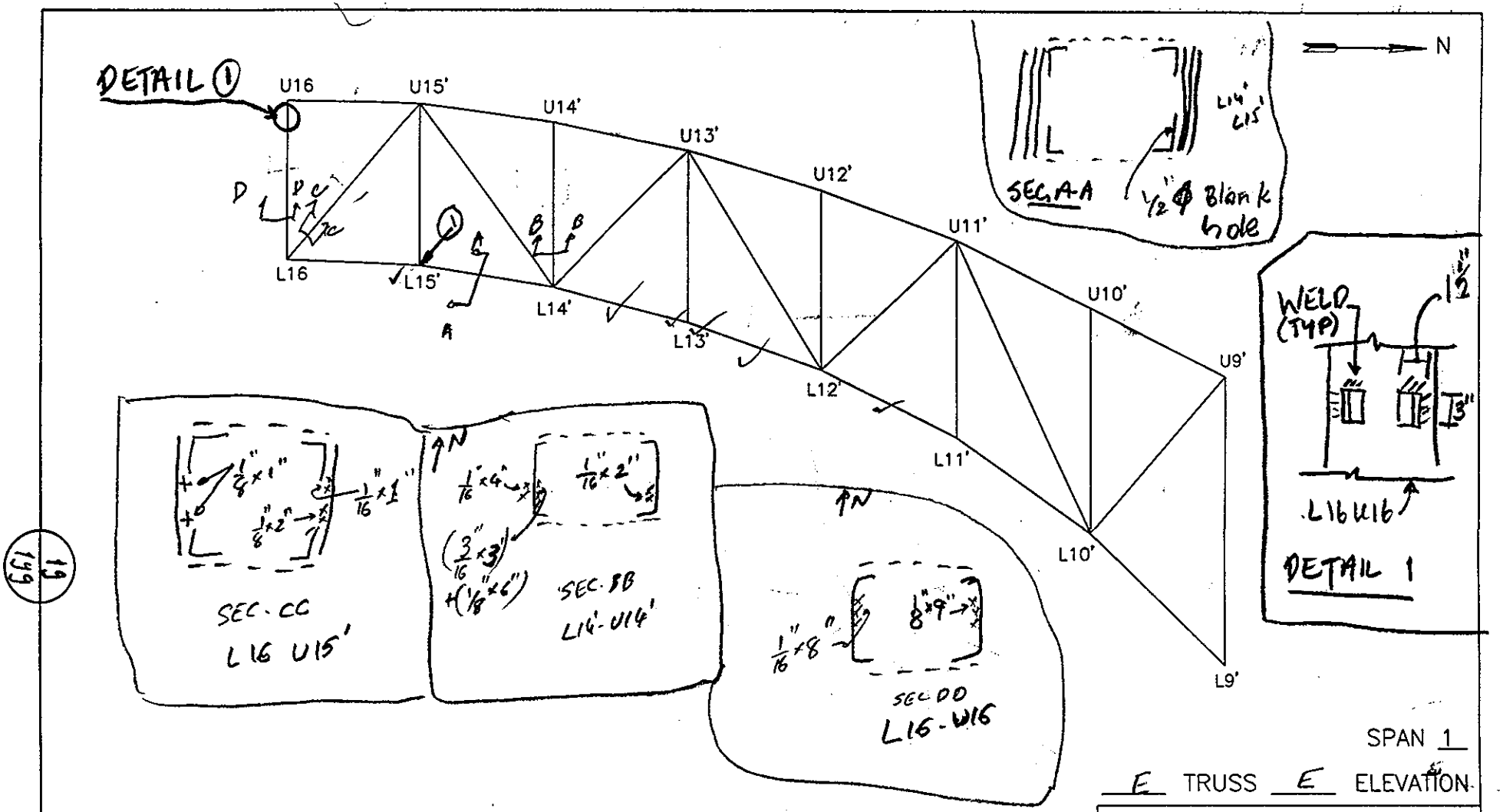

SPAN 1

E TRUSS E ELEVATION

NOTES:

1. AREAS OF POOR QUALITY WELD IN ANCHORAGE SEGMENT (N. SIDE)

TRUSS ELEVATION EL	
DEPARTMENT OF THE ARMY NEW ENGLAND DISTRICT CORPS OF ENGINEERS	
SAGAMORE HIGHWAY BRIDGE ROUTINE INSPECTION	
NOTES BY: LICHTENSTEIN CONSULTING ENGINEERS	
JOB #1986	DATE: 04/03 (u'
CREW: AP EL	SHEET 1 OF 2

19
199

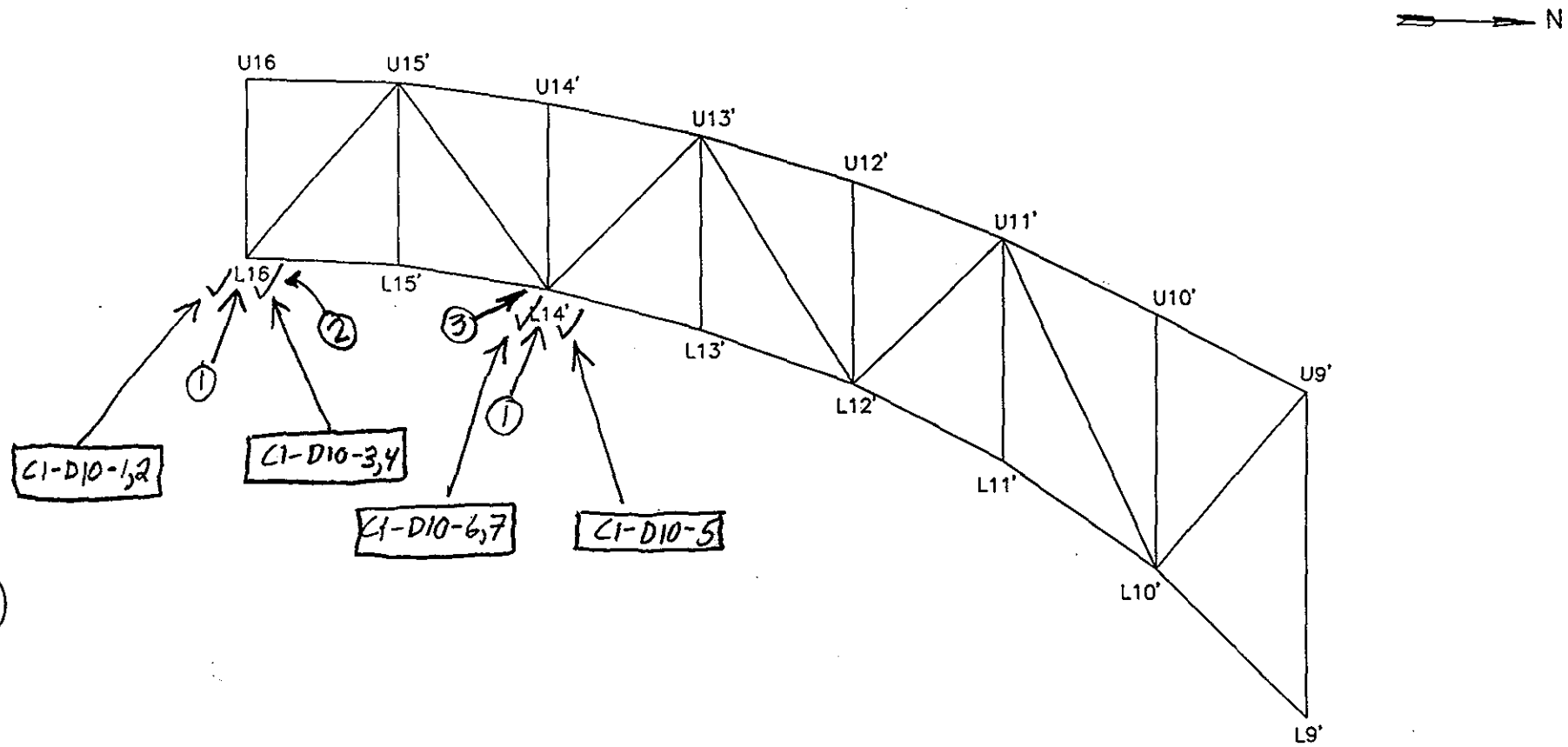

SPAN 1

E TRUSS E ELEVATION

NOTES: (1) Inspected using block and tackle
(2) Tape wrapped around N. cable near base of weldment. Tape is marked/scarred [C1:D10-4]
(3) Areas of poor quality weld in weldment

TRUSS ELEVATION EL	
DEPARTMENT OF THE ARMY NEW ENGLAND DISTRICT CORPS OF ENGINEERS	
SAGAMORE HIGHWAY BRIDGE ROUTINE INSPECTION	
NOTES BY: LICHTENSTEIN CONSULTING ENGINEERS	
JOB #1986	DATE: 4/6/01
CREW: SP, EL, SD	SHEET 1 OF 9

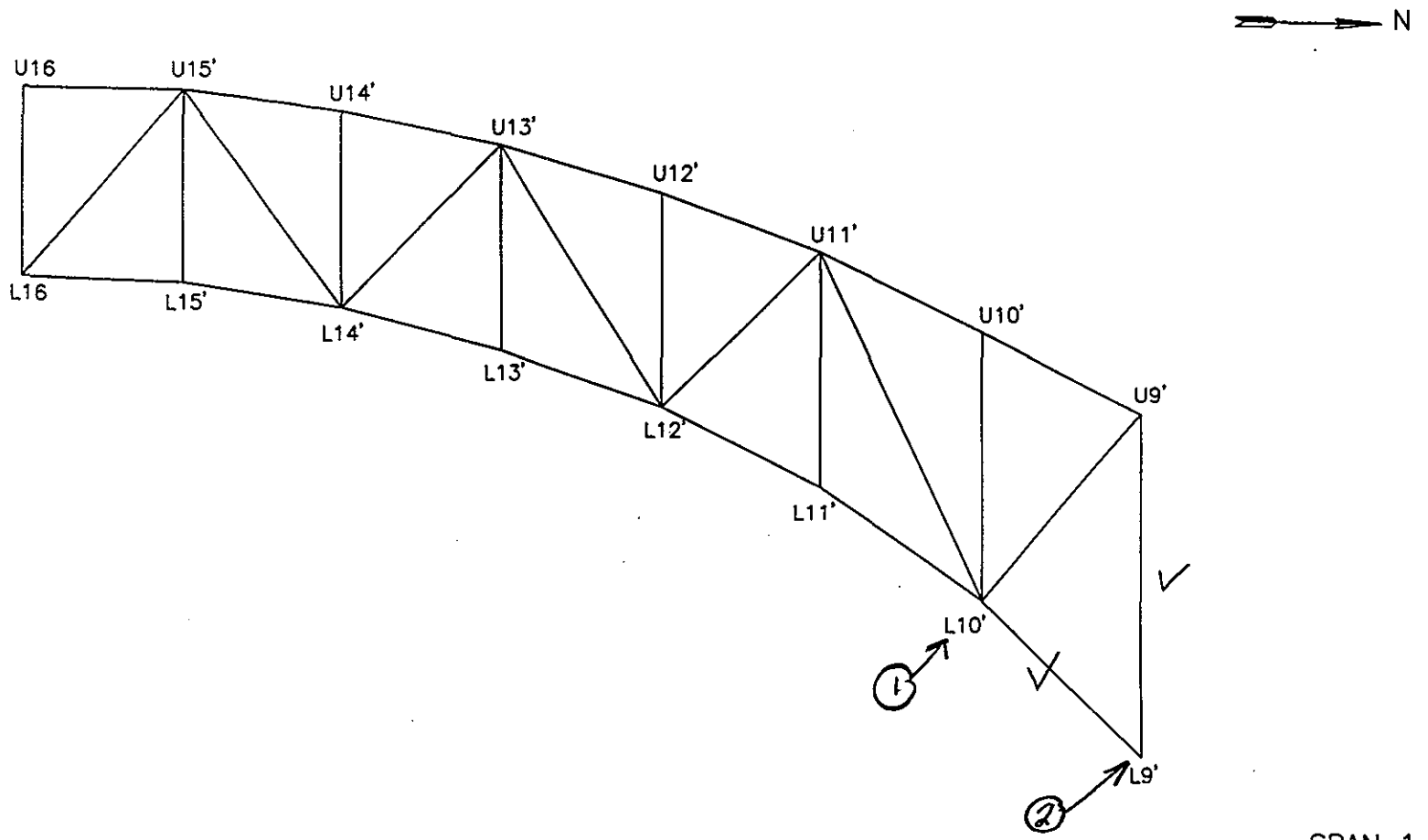

SPAN 1

E TRUSS E ELEVATION

NOTES: (1) Multiple areas of pitting up to 3/16" pit × 8"Φ at vert PLs at jt C2-D21-4

(2) Corrosion hole 3"×1" in top horiz conn PL for lat. bracing

TRUSS ELEVATION EL	
DEPARTMENT OF THE ARMY NEW ENGLAND DISTRICT CORPS OF ENGINEERS	
SAGAMORE HIGHWAY BRIDGE ROUTINE INSPECTION	
NOTES BY: LICHTENSTEIN CONSULTING ENGINEERS	
JOB #1986	DATE: 4/9/01
CREW: SP, EL	SHEET 9 OF 10

21/99

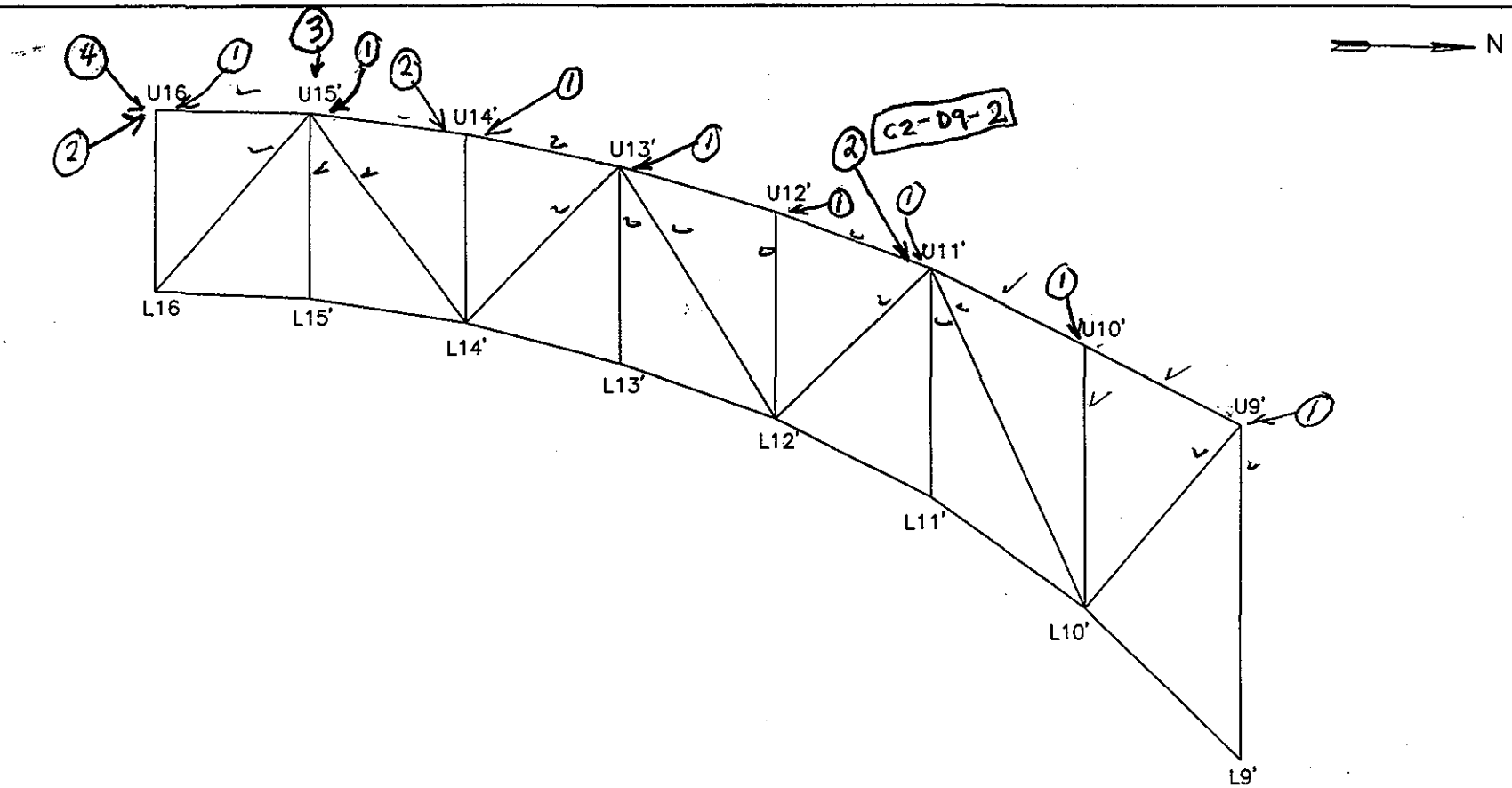

SPAN 1

E TRUSS E ELEVATION

NOTES: (1) PL welded on West Elevation of Top Chord

(2) Safety tie wire on Clevis pin missing @ ~~safety cable anchorage to truss~~ (Typ. cond. as noted)

(3) Rivet hds: 4 w/ 50% loss plus 3 w/ 90% seat loss on W. vert gusset PL. C2-D9-5

(4) 1 of 2 aviation lights not working

TRUSS ELEVATION EL	
DEPARTMENT OF THE ARMY NEW ENGLAND DISTRICT CORPS OF ENGINEERS	
SAGAMORE HIGHWAY BRIDGE ROUTINE INSPECTION	
NOTES BY: LICHTENSTEIN CONSULTING ENGINEERS	
JOB #1986	DATE: 4/3/01
CREW: SD, SP	SHEET 1 OF 6

22
199

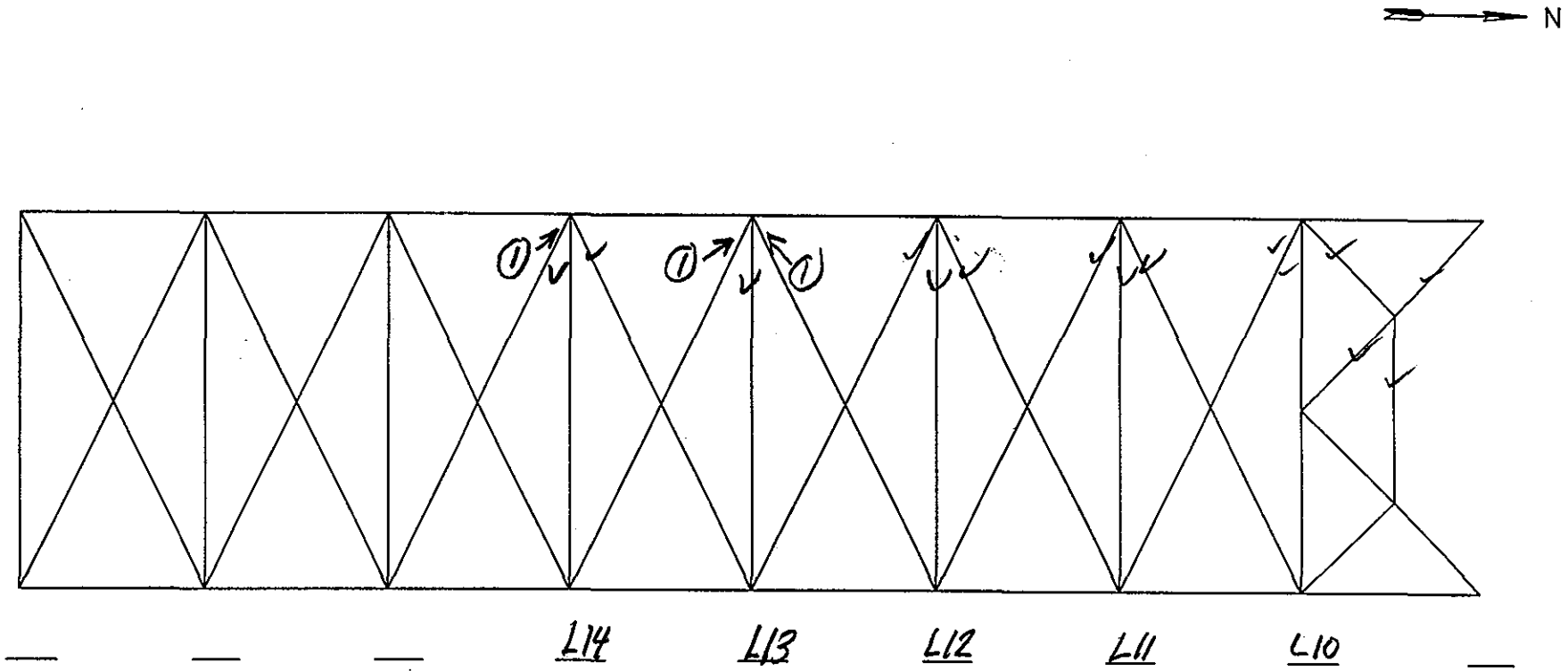

SPAN 1

Lower CHORD BRACING

NOTES: ① Random areas of 1/8" pitting on top of bot horiz leg of lat. bracing ∡.

TRUSS BRACING EL	
DEPARTMENT OF THE ARMY NEW ENGLAND DISTRICT CORPS OF ENGINEERS	
SAGAMORE HIGHWAY BRIDGE ROUTINE INSPECTION	
NOTES BY: LICHTENSTEIN CONSULTING ENGINEERS	
JOB #1986	DATE: 4/5/01
CREW: SP, EL	SHEET 4 OF 4

23
199

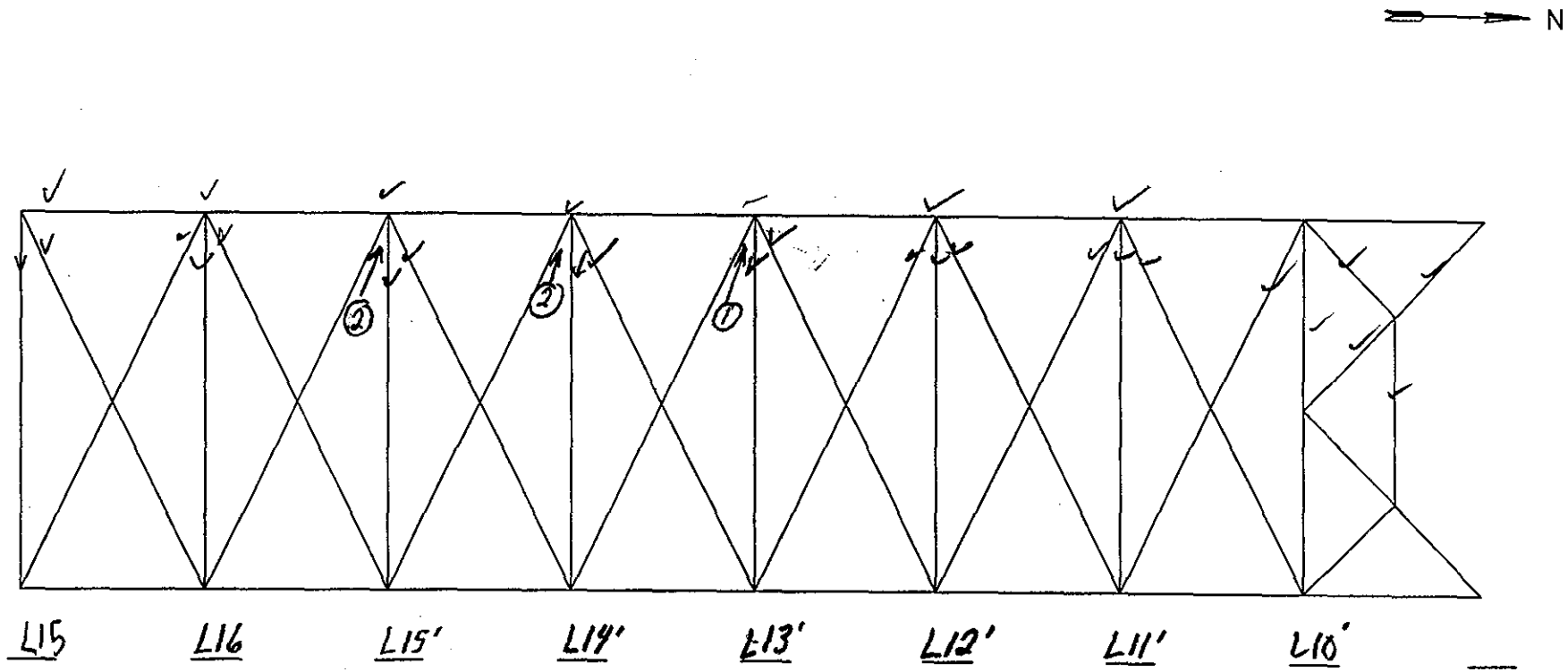

SPAN 1

Lower CHORD BRACING

NOTES: (1) 3 areas of 1/8" pit × 3"Φ on top of bot horiz (lat.) ∡ of bracing
(2) Random areas of 1/8" pitting on top of bot horiz leg of lat bracing ∡.

TRUSS BRACING EL	
DEPARTMENT OF THE ARMY NEW ENGLAND DISTRICT CORPS OF ENGINEERS	
SAGAMORE HIGHWAY BRIDGE ROUTINE INSPECTION	
NOTES BY: LICHTENSTEIN CONSULTING ENGINEERS	
JOB #1986	DATE: 4/5/01
CREW: EL, SP	SHEET 2 OF 4

24
199

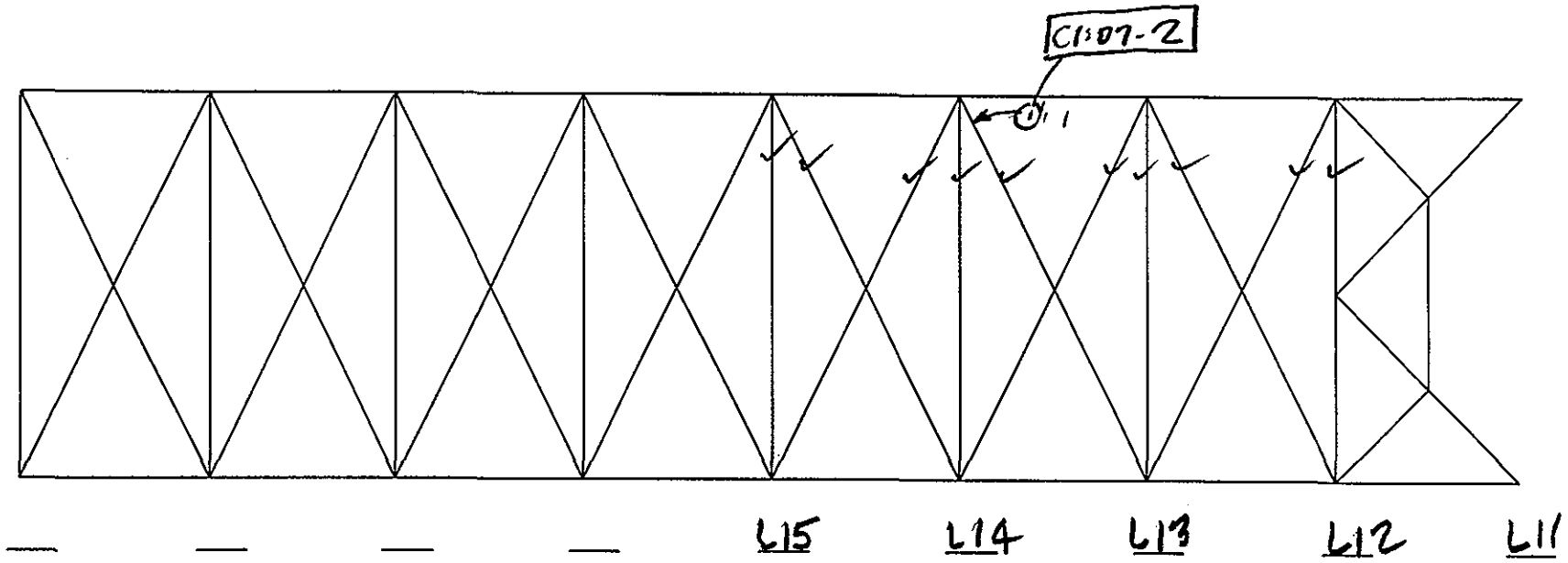

25
169

SPAN 1
BOT CHORD BRACING

NOTES:

① MULTIPLE CORROSION HOLES IN VERT LEG OF BOT FL &'S @ CONN TO JT.

- RANDOM AREAS OF 1/8" PITTING, UP TO 4"Ø ON ALL MEMBERS

TRUSS BRACING EL	
DEPARTMENT OF THE ARMY NEW ENGLAND DISTRICT CORPS OF ENGINEERS	
SAGAMORE HIGHWAY BRIDGE ROUTINE INSPECTION	
NOTES BY: LICHTENSTEIN CONSULTING ENGINEERS	
JOB #1986	DATE: 4-3-01
CREW: EL	SHEET 2 OF 2

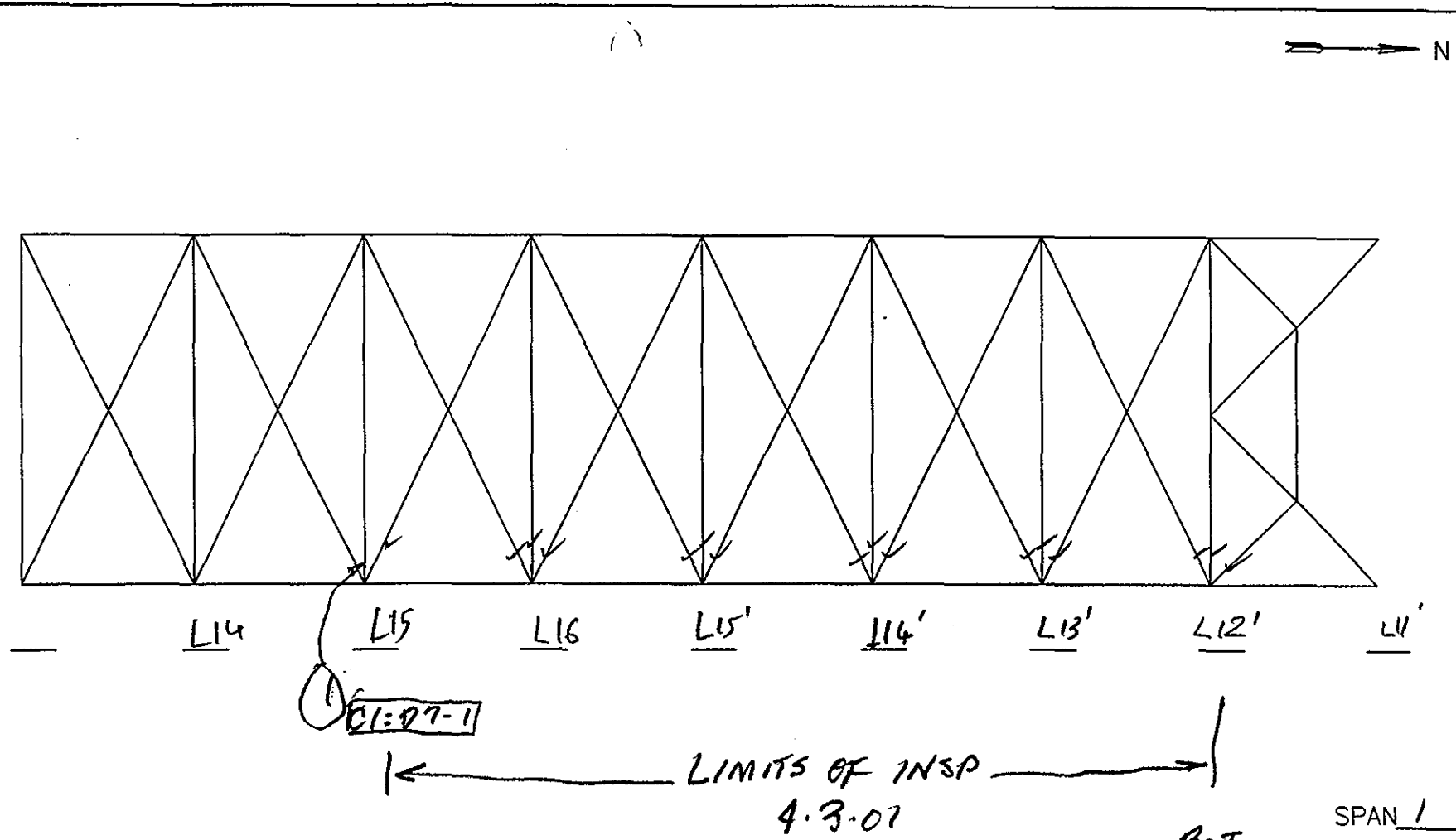

SPAN 1
BOT CHORD BRACING

NOTES: (1) 1"Ø CORROSION HOLE IN TOP HORIZ. FL C CONN.

- RANDOM AREAS OF 1/8" PITTING, UP TO 4" Ø ON ALL MEMBERS

TRUSS BRACING	EL
DEPARTMENT OF THE ARMY NEW ENGLAND DISTRICT CORPS OF ENGINEERS	
SAGAMORE HIGHWAY BRIDGE ROUTINE INSPECTION	
NOTES BY: LICHTENSTEIN CONSULTING ENGINEERS	
JOB #1986	DATE: 4·3·01
CREW: AP, EL	SHEET 2 OF 2

26
159

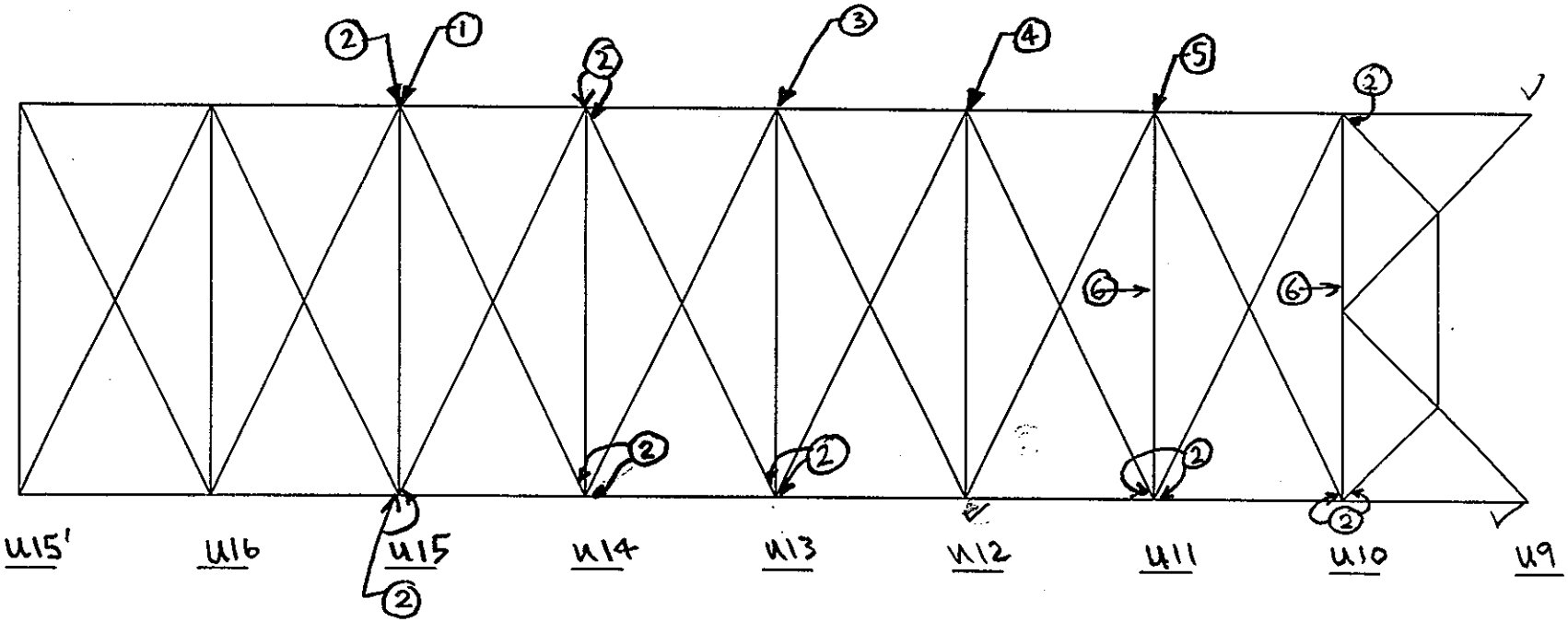

Typ. Cond. - Random Areas of up to 1/8" pitting on Lateral bracing members & bott. Gusset PL's

SPAN 1

Top CHORD BRACING

NOTES:
1. 3/4" ϕ Corrosion Hole in Top Horz. Gusset PL
2. 1/2" IR between Top Gusset PL & Lateral bracing ∠'s.
3. 1" x 1" Corrosion Hole in Top Horz. Gusset PL
4. 1 1/2" x 3/4" Corrosion Hole in Top Horz. Gusset PL & 1/2" ϕ Corr. Hole in bot horz. Gusset PL.
5. 5" x 1" Corrosion Hole in Top Horz. Gusset PL C2-D10-1
6. Water Pooling along north bott. FL of N. Channel. (F.L.)

TRUSS BRACING EL	
DEPARTMENT OF THE ARMY NEW ENGLAND DISTRICT CORPS OF ENGINEERS	
SAGAMORE HIGHWAY BRIDGE ROUTINE INSPECTION	
NOTES BY: LICHTENSTEIN CONSULTING ENGINEERS	
JOB #1986	DATE: 4/3/01
CREW: SD, SP	SHEET 6 OF 6

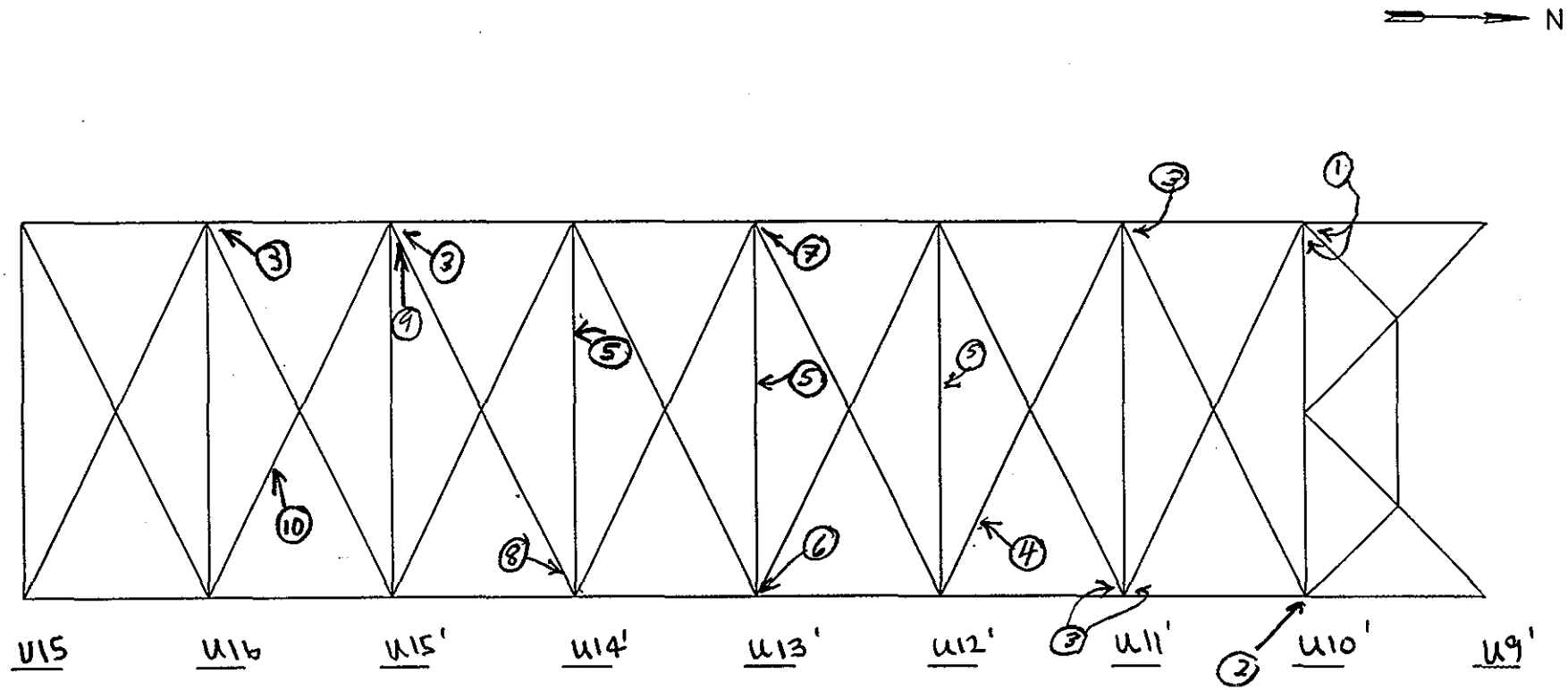

(10) 1"Φ hole in vert leg of bot ∡ of lateral bracing

SPAN 1

Top CHORD BRACING

NOTES: (1) Areas (4"x4") of 1/8" pitting on top of lower horiz gusset PL
(2) 1"Φ Hole in top horiz gusset PL C2-D9-1
(3) 1/2" IR bet lateral bracing ∡ and Top gusset PL
(4) 1"Φ hole in bot horiz leg of x bracing
(5) Random areas of 1/16" pitting x 3"Φ on web of [section
(6) 1 1/2"x2" hole in vert leg of bot ∡ of lateral bracing C2-D9-3
(7) 1/2"Φ hole in vert leg of bot ∡ of lateral bracing
(8) 1"Φ hole in horiz leg of top ∡ of lateral bracing
(9) 4"x4" PL welded to top of bot horiz. (lat.) gusset PL

TRUSS BRACING EL	
DEPARTMENT OF THE ARMY NEW ENGLAND DISTRICT CORPS OF ENGINEERS	
SAGAMORE HIGHWAY BRIDGE ROUTINE INSPECTION	
NOTES BY: LICHTENSTEIN CONSULTING ENGINEERS	
JOB #1986	DATE: 4/3/01
CREW: SD, SP	SHEET 3 OF 6

28
199

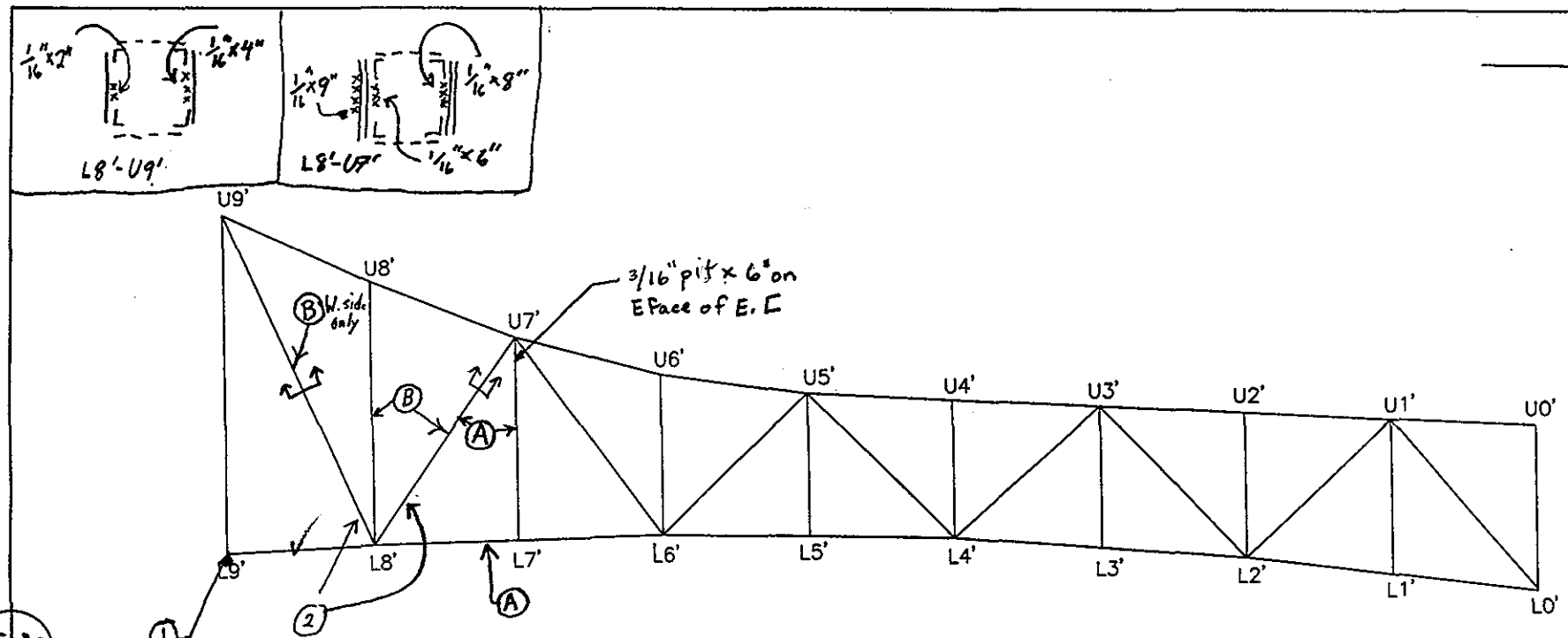

SPAN 2

W TRUSS E ELEVATION

NOTES: (1) Random Areas of 1/8" pit x up to 6"φ on E. Gusset PL

(2) Random locations of up to 1/4" IR bet vert leg of int ∠ and web PL nr L8'

TRUSS ELEVATION EL

DEPARTMENT OF THE ARMY
NEW ENGLAND DISTRICT CORPS OF ENGINEERS

SAGAMORE HIGHWAY BRIDGE
ROUTINE INSPECTION

NOTES BY: LICHTENSTEIN
CONSULTING ENGINEERS

JOB #1986 | DATE: 3/21/01

CREW: SP, SD | SHEET 1 OF 1

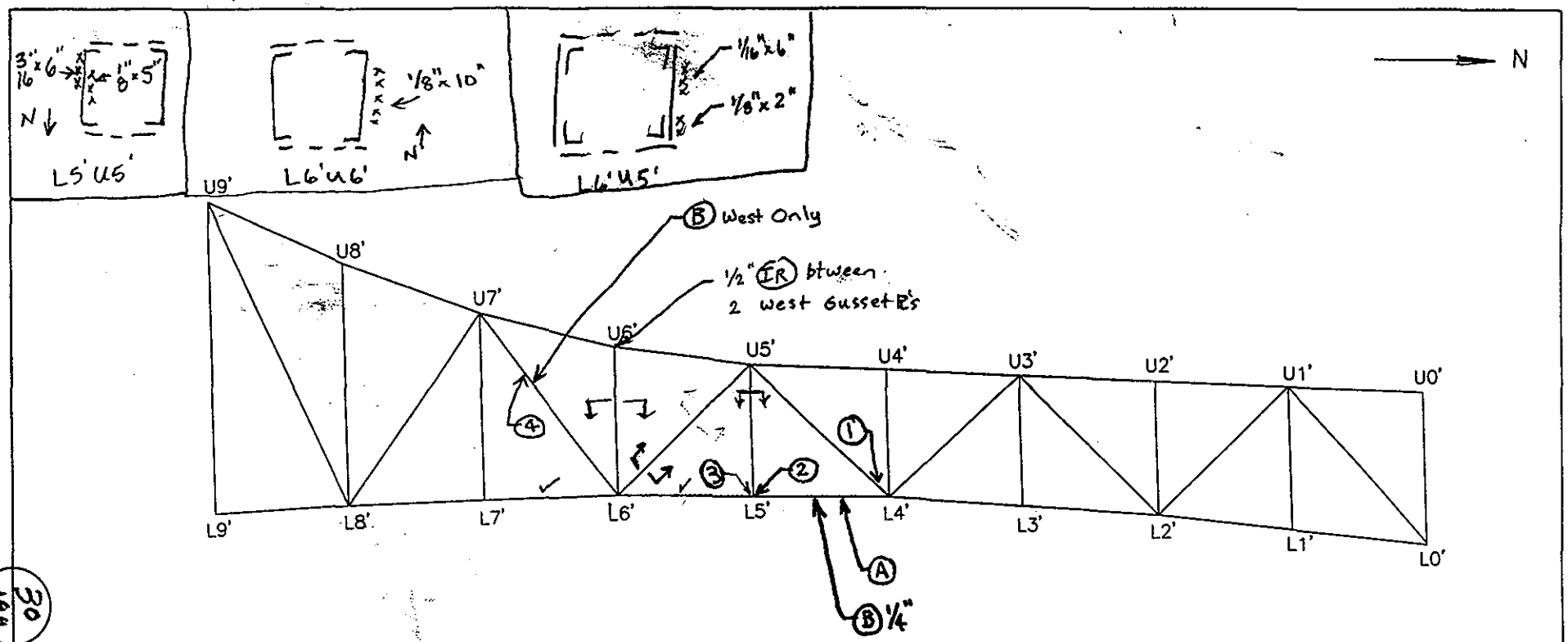

30
199

SPAN 2

W TRUSS E ELEVATION

NOTES:
1. 1"x2" Hole @ bot. edge of inter. stiffener PL C2-D1-5
2. Bot. Chord stiff. 1 1/2"x3/4" Corrosion Hole @ bot.
3. 1" Ø CORROSION HOLE IN TOP BATTEN PL L5'-L6'
4. 2 Areas of 1/8" pit x 2" on E. Face of E. Web PL

TRUSS ELEVATION EL

DEPARTMENT OF THE ARMY
NEW ENGLAND DISTRICT CORPS OF ENGINEERS

SAGAMORE HIGHWAY BRIDGE
ROUTINE INSPECTION

NOTES BY: LICHTENSTEIN
CONSULTING ENGINEERS

JOB #1986 | DATE: 3/20/01

CREW: SD, EL, AP | SHEET 1 OF 4

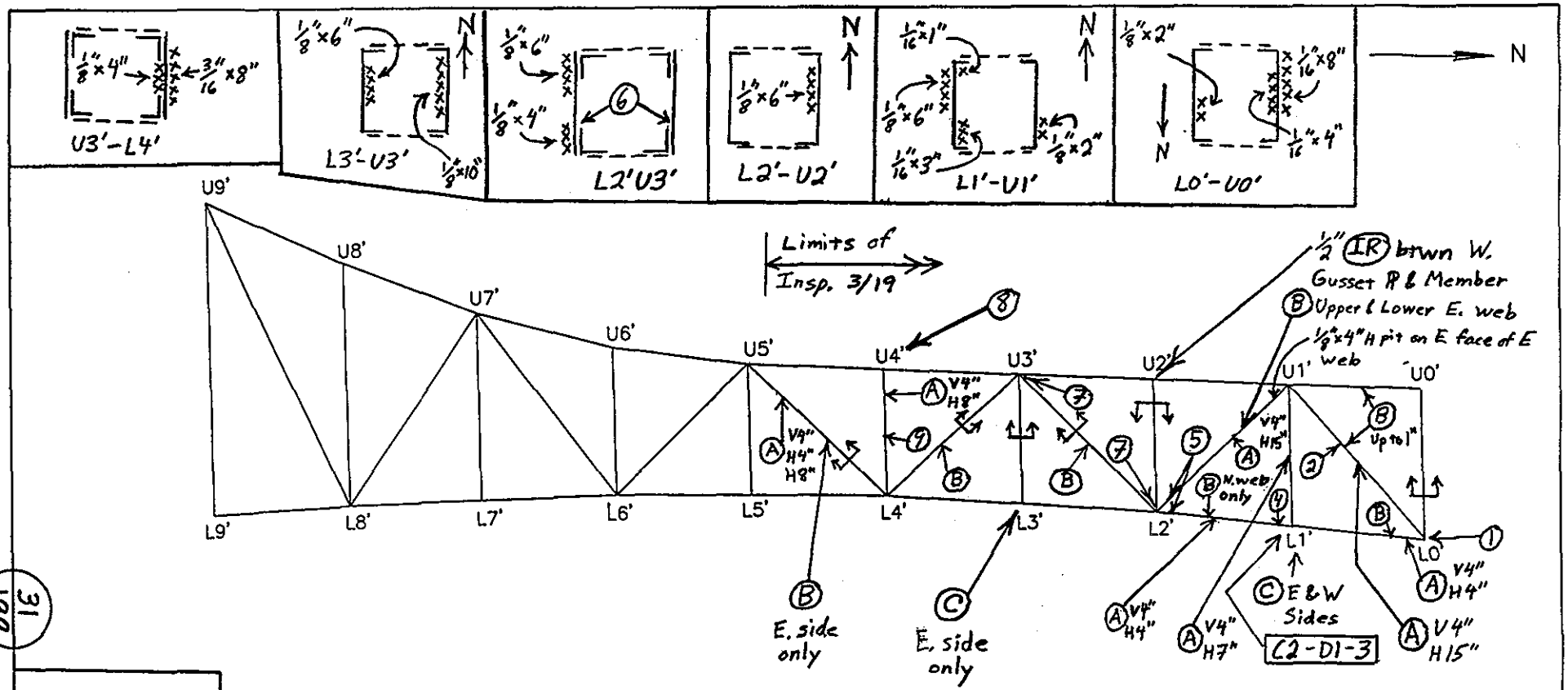

SPAN 2

W TRUSS E ELEVATION

NOTES:
1. Up to 3/16" pit × 2"H × 1'L on W face of W gusset PL
2. 1/8" pit × 5" Φ on Ext face of E L
3. Random areas of up to 1/8" pit on E face of E L (max 5"×5")
4. Area of 1/8" pit × 5"H × 5"L on E web PL
5. 1/2" Φ corrosion hole @ edge of bot batten PL (U1'-L2') & top batten PL (U1'-L2')
6. Random locations of 1/2" (IR) × 6"L for FL of member
7. Top of top batten PL w/ 1/8" pit × over 50% of area
8. 1/4" (IR) btwn L4'-U4' and gusset PL @ U4', W. side only
9. 1/8" pit × 6" Φ on E face of W L

TRUSS ELEVATION EL	
DEPARTMENT OF THE ARMY NEW ENGLAND DISTRICT CORPS OF ENGINEERS	
SAGAMORE HIGHWAY BRIDGE ROUTINE INSPECTION	
NOTES BY: LICHTENSTEIN CONSULTING ENGINEERS	
JOB #1986	DATE: 3/19/01
CREW: SMP, SMD	SHEET 1 OF 2

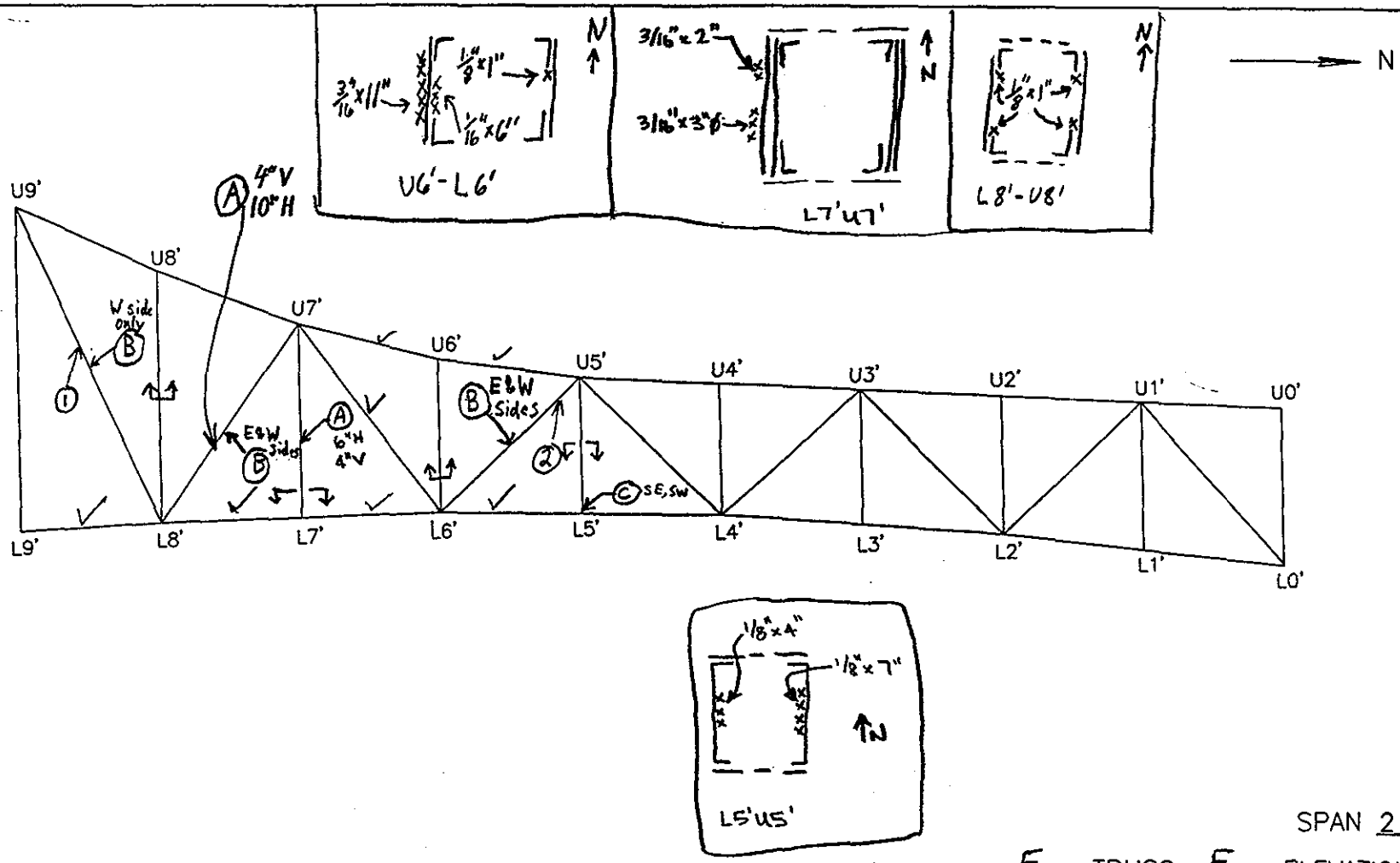

SPAN 2

E TRUSS E ELEVATION

NOTES: ① 3/16" pit x 3" ϕ on int face of E ℙ
② 1/16" pit x 7" H on E ext face of web

➤ Pitting on lacing bars, up to 1/4", throughout span, E&W, w/ locations of 100% section loss on edge of bar.

TRUSS ELEVATION EL

DEPARTMENT OF THE ARMY
NEW ENGLAND DISTRICT CORPS OF ENGINEERS

SAGAMORE HIGHWAY BRIDGE
ROUTINE INSPECTION

NOTES BY: LICHTENSTEIN
CONSULTING ENGINEERS

JOB #1986	DATE: 4/10/01
CREW: SP, SD	SHEET 1 OF 4

32
195

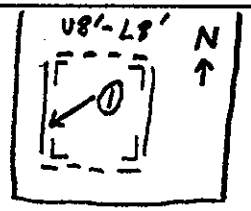

N

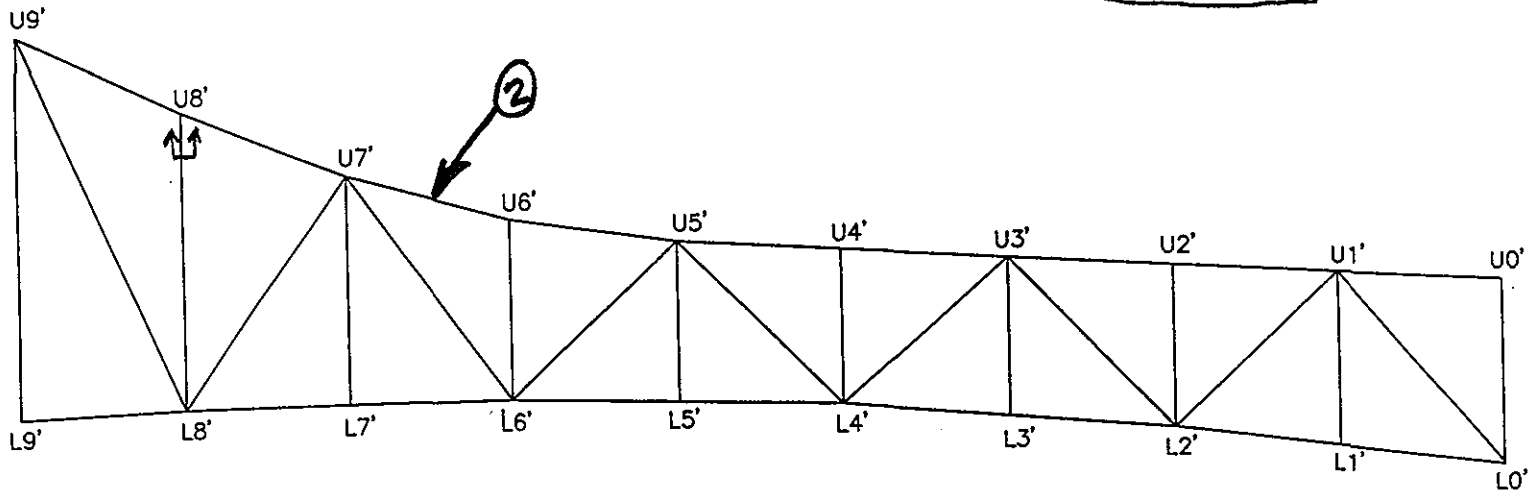

33
199

SPAN 2

E TRUSS E ELEVATION

NOTES: 1 Random locations of ½" IR btwn ∡ Leg & PL (Typ.)
EL/SP 4-3-01 2 18"x8" PITTING ON TOP OF TOP FL.

TRUSS ELEVATION	EL
DEPARTMENT OF THE ARMY NEW ENGLAND DISTRICT CORPS OF ENGINEERS	
SAGAMORE HIGHWAY BRIDGE ROUTINE INSPECTION	
NOTES BY: LICHTENSTEIN CONSULTING ENGINEERS	
JOB #1986	DATE: 3/23/01
CREW: SP, SD	SHEET 8 OF 8

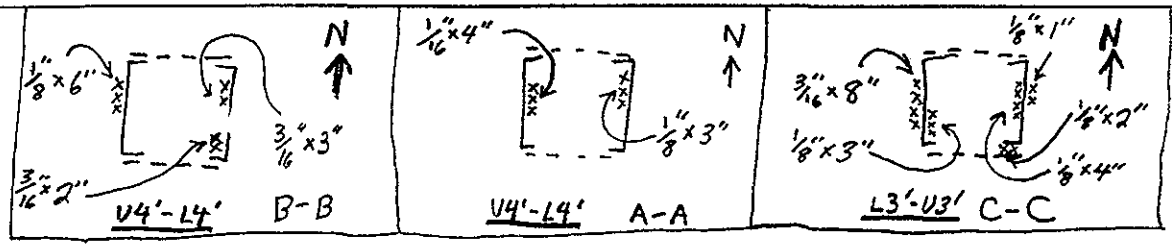

N

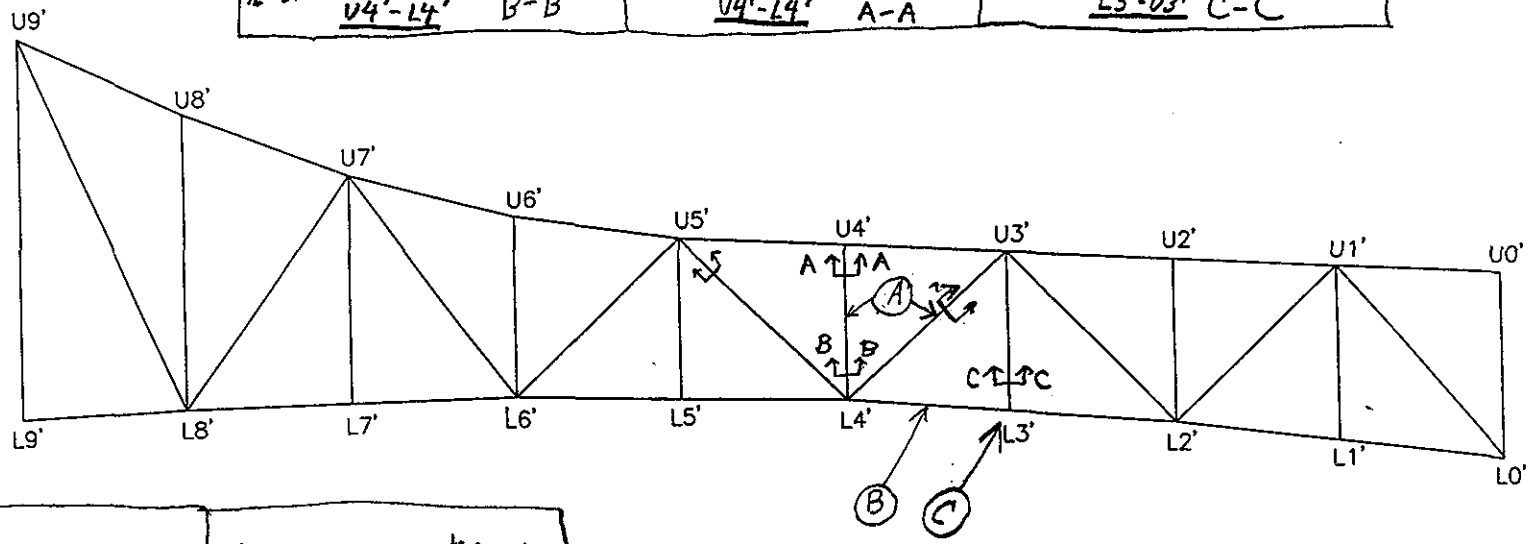

34
199

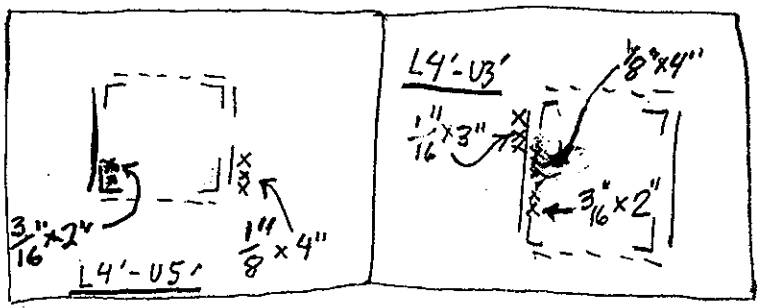

SPAN 2

E TRUSS E ELEVATION

NOTES:

TRUSS ELEVATION EL	
DEPARTMENT OF THE ARMY NEW ENGLAND DISTRICT CORPS OF ENGINEERS	
SAGAMORE HIGHWAY BRIDGE ROUTINE INSPECTION	
NOTES BY: LICHTENSTEIN CONSULTING ENGINEERS	
JOB #1986	DATE: 3/21/01
CREW: SP, SD, AP	SHEET 1 OF 1

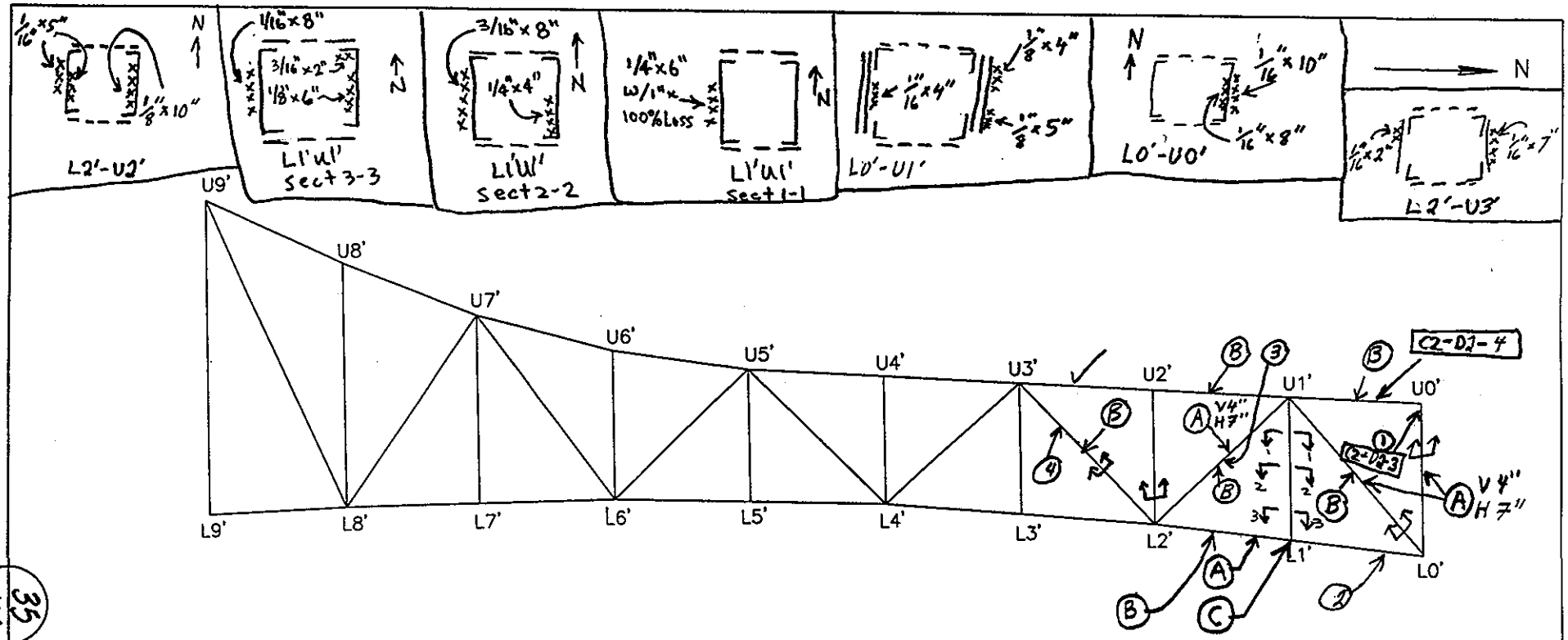

SPAN 2

E TRUSS E ELEVATION

NOTES: ① 3"Φ Hole in top Pl of top chord at U0'
② 1/8"×4"H on W. face of W web PL (PITTING)
③ 1/8"×6"H on E. face of E Web PL "
④ Random locations of 1/4"IR bet int & vert. leg & web PL

TRUSS ELEVATION EL	
DEPARTMENT OF THE ARMY NEW ENGLAND DISTRICT CORPS OF ENGINEERS	
SAGAMORE HIGHWAY BRIDGE ROUTINE INSPECTION	
NOTES BY: LICHTENSTEIN CONSULTING ENGINEERS	
JOB #1986	DATE: 3/20/01
CREW: SD, SP	SHEET 1 OF 1

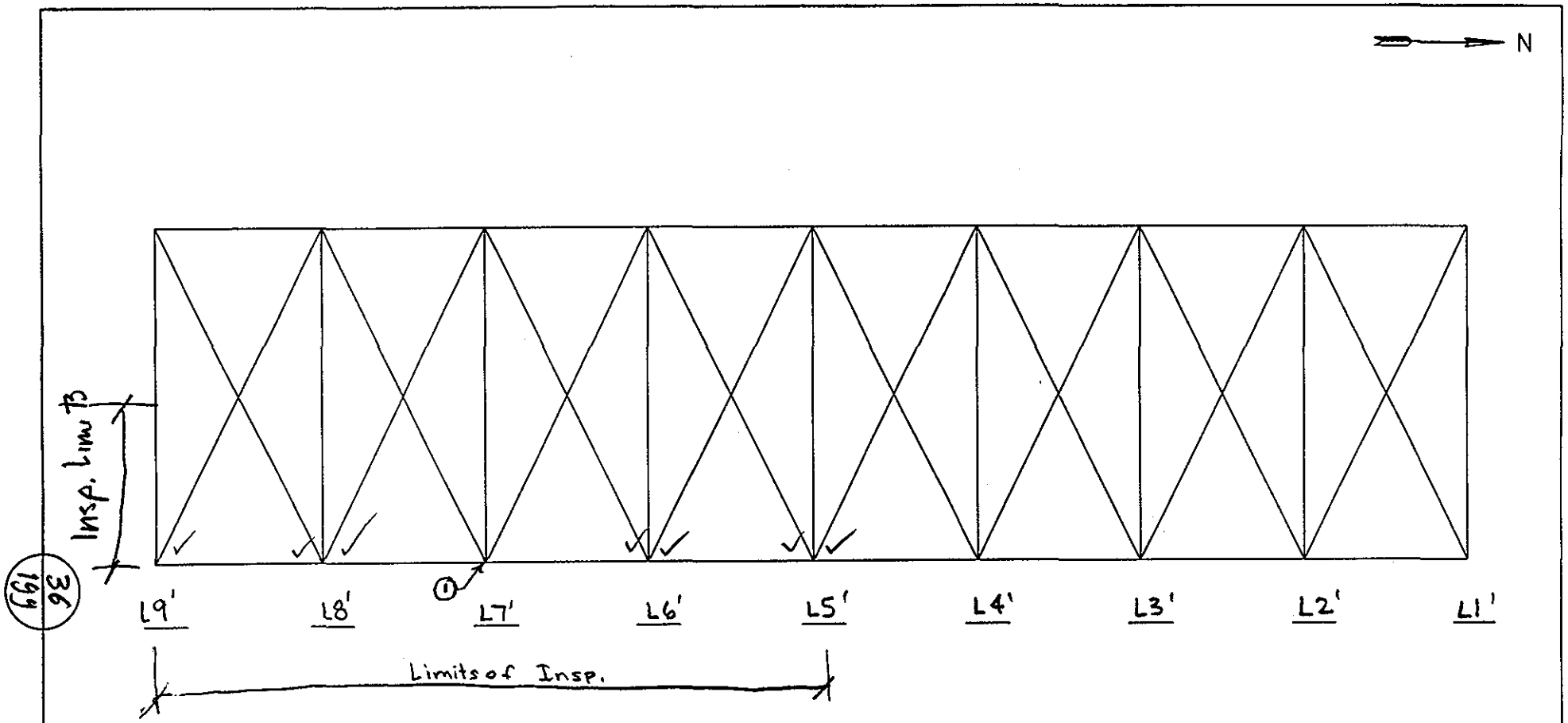

36/196

SPAN 2

Bott. CHORD BRACING

NOTES: 1 3/4"x1 1/2" Corrosion Hole in Top Gusset PL C2-D22-2

TRUSS BRACING EL	
DEPARTMENT OF THE ARMY NEW ENGLAND DISTRICT CORPS OF ENGINEERS	
SAGAMORE HIGHWAY BRIDGE ROUTINE INSPECTION	
NOTES BY: LICHTENSTEIN CONSULTING ENGINEERS	
JOB #1986	DATE: 4/10/01
CREW: SD, SP	SHEET 2 OF 4

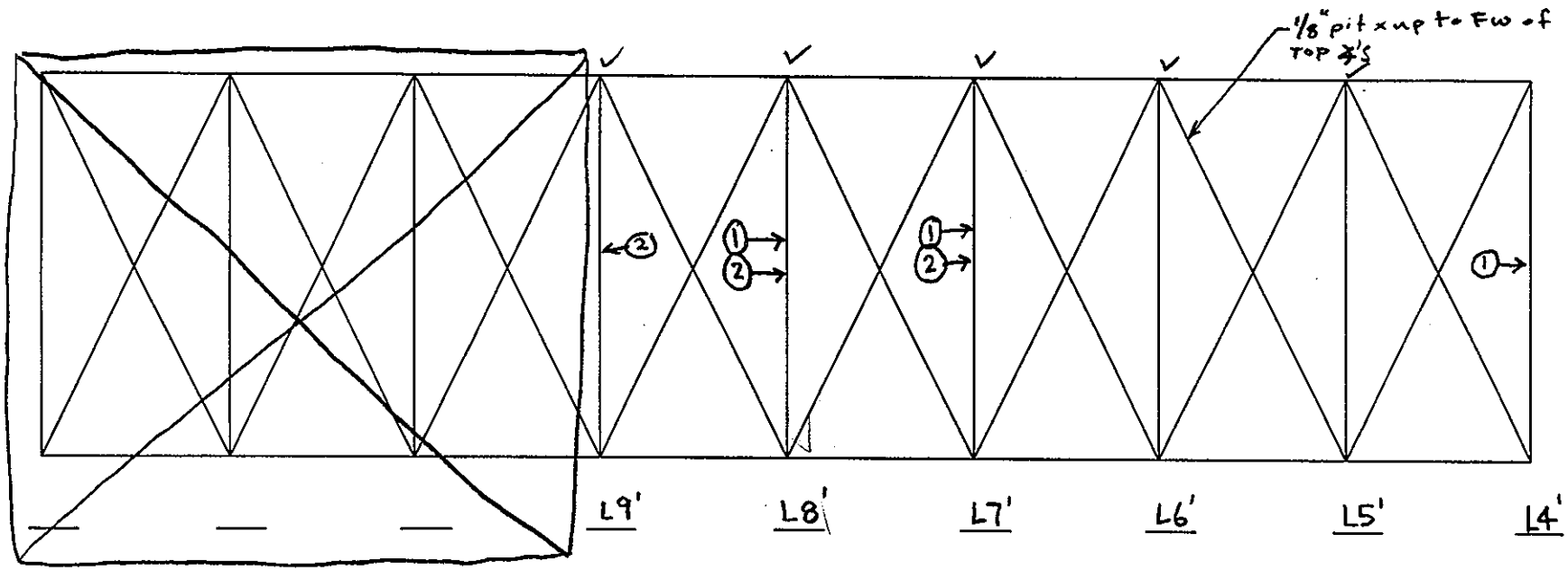

SPAN 2

Bott. CHORD BRACING

NOTES: ① Random Areas of up to 1/4" pit x up to FH of S Face of S. Channel

② Random Areas of up to 3/16" pit x up to FH of N Face of S.C & S. Face of N.C

TRUSS BRACING EL

DEPARTMENT OF THE ARMY

NEW ENGLAND DISTRICT CORPS OF ENGINEERS

SAGAMORE HIGHWAY BRIDGE

ROUTINE INSPECTION

NOTES BY: LICHTENSTEIN

CONSULTING ENGINEERS

JOB #1986 | DATE: 3/20/01

CREW: SD, EL, AP | SHEET 2 OF 4

37
199

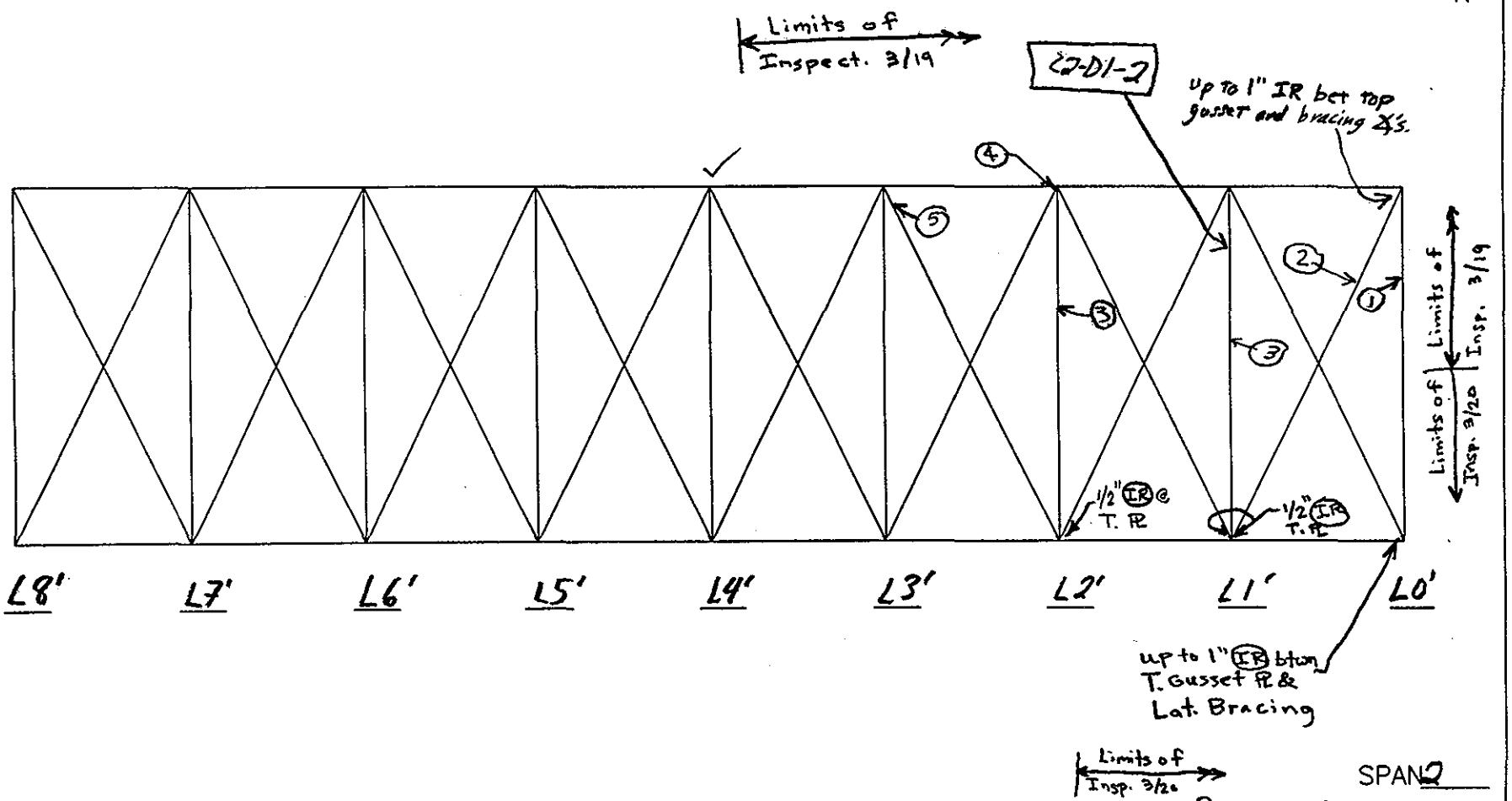

SPAN 2

Bot. CHORD BRACING

NOTES:
1. Random areas of up to 1/8" pitting x up to FH on inside faces of L's
2. Random areas of up to 1/8" pit x up to FW of OSL of Top & Bot ∠ (Typ. Cond.)
3. " " of 1/4" pitting on S. face of N L web up to FH and 1/4" pitting on S. face of S. L up to 4" H
4. 1 1/2" L x 3/4" W Corrosion Hole in Top Gusset PL C2-D1-4
5. 1/2" ϕ Corrosion hole w/ 1/2" IR along edge of top gusset PL

TRUSS BRACING	EL
DEPARTMENT OF THE ARMY NEW ENGLAND DISTRICT CORPS OF ENGINEERS	
SAGAMORE HIGHWAY BRIDGE ROUTINE INSPECTION	
NOTES BY: LICHTENSTEIN CONSULTING ENGINEERS	
JOB #1986	DATE: 3/19/01
CREW: SMP, SMD	SHEET 2 OF 2

36 1/49

II. FLOOR SYSTEM

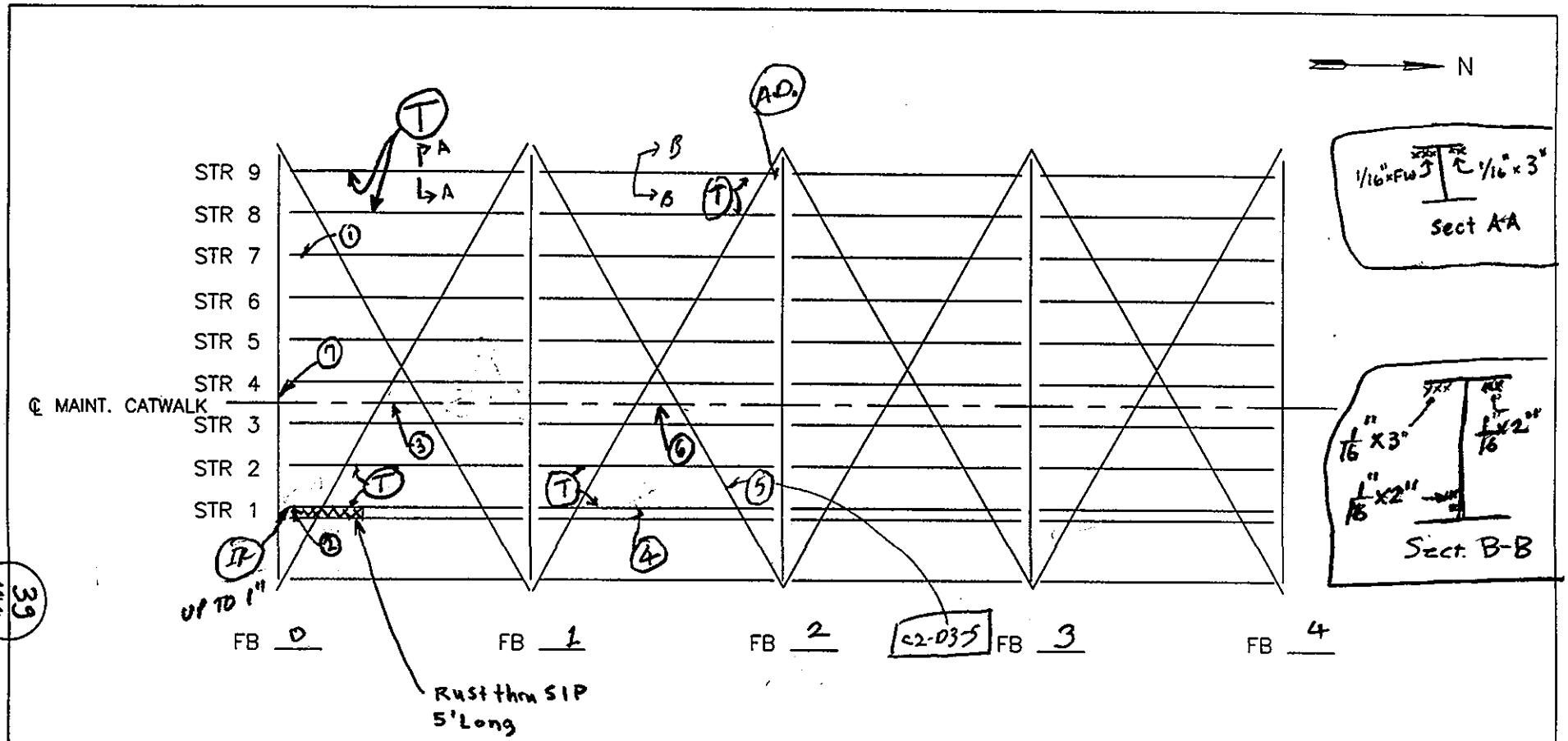

39
199

SPAN 3

C2-D3-4

NOTES:

1. WELDED PL WITH 3" HORI. WELD ON WEB (WEST), STR 7
2. 1/16" PIT. X F.H. OF EAST WEB STR. 1
3. 1 Missing & 1 Loose bolt on catwalk railing conn. & AD btwn catwalk railing & post
4. 1/8" x 2" ON U/S OF EAST TOP FL. (PITTING)
5. 1/4" Φ HOLE IN WEST BOT. & WITH RANDOM AREAS OF 1/8" PIT. X UP TO 3" WIDE THROUGH OUT. C2-D3-5
6. 1" Φ hole in catwalk rail post E side FB 1 to 2 – EL, SP. 4/9/01
7. ≈3' SECTION OF CATWALK HANDRAIL REMOVED (FOR ACCESS TO LADDER)

FLOOR SYSTEM EL	
DEPARTMENT OF THE ARMY NEW ENGLAND DISTRICT CORPS OF ENGINEERS	
SAGAMORE HIGHWAY BRIDGE ROUTINE INSPECTION	
NOTES BY: LICHTENSTEIN CONSULTING ENGINEERS	
JOB #1986	DATE: 03/26/01
CREW: AP, SO, SP	SHEET 3 OF 6

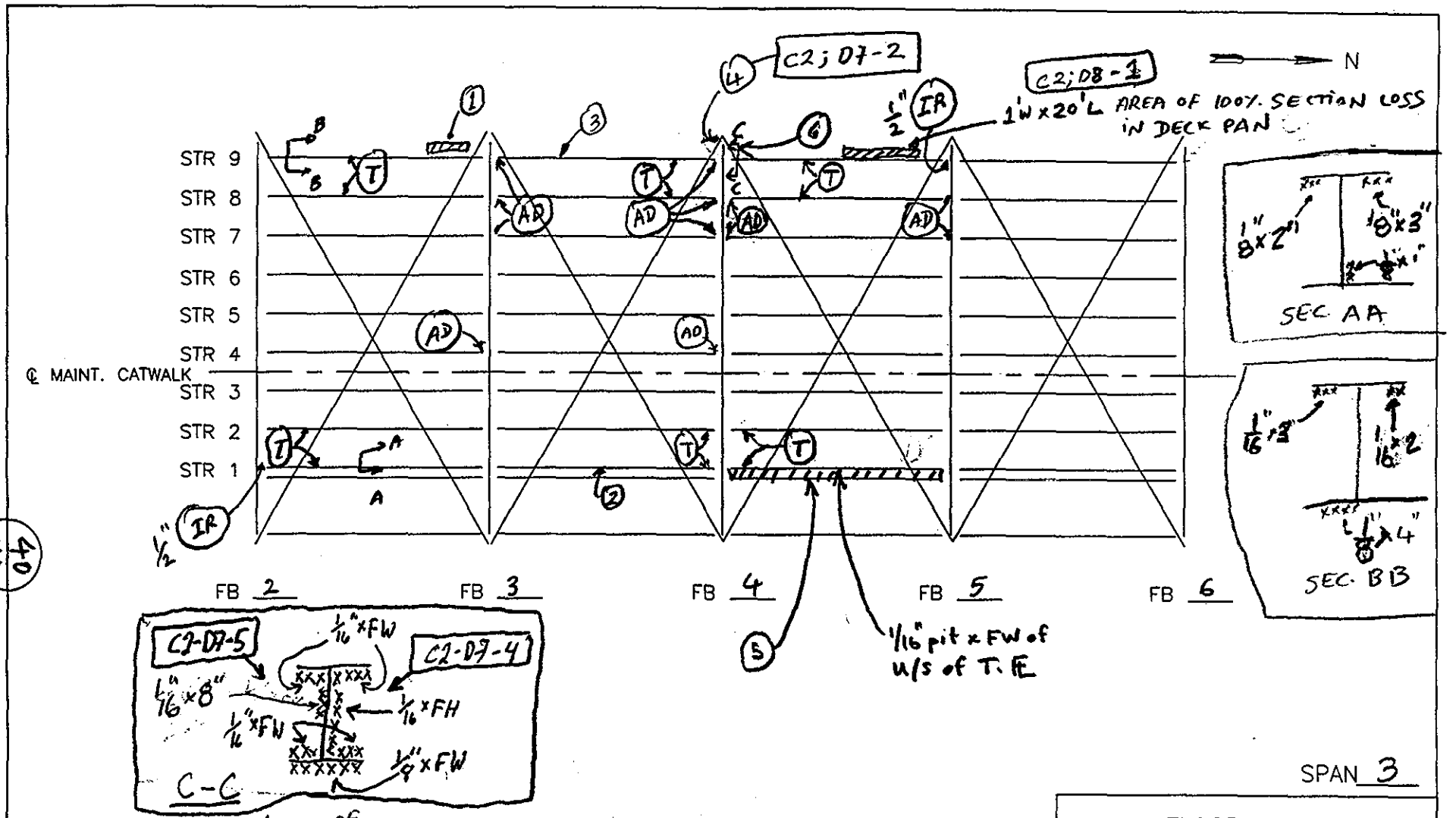

40
199

SPAN 3

NOTES:

1. 1' x 16' AREA OF UP TO 50% SECT. LOSS ON DECK PAN BENEATH BRUSH CURB.
2. 1/16" x 2" PIT ON U/S OF EAST TOP FL
3. 1/16" x 3" PIT ON U/S OF WEST TOP FL
4. SEVERAL CORROSION HOLES, UP TO 1½" Φ ON BOT. VERT. LEG OF LATERAL BRACING ∠. C2; D7-2
5. Areas of 100% S.L. in deck pan x FL of bay
6. 1" Φ Hole in top horiz. (lat) gusset PP C2-D7-3

FLOOR SYSTEM	EL
DEPARTMENT OF THE ARMY NEW ENGLAND DISTRICT CORPS OF ENGINEERS	
SAGAMORE HIGHWAY BRIDGE ROUTINE INSPECTION	
NOTES BY: LICHTENSTEIN CONSULTING ENGINEERS	
JOB #1986	DATE: 03/28/01
CREW: AP, SD, SP	SHEET 1 OF 7

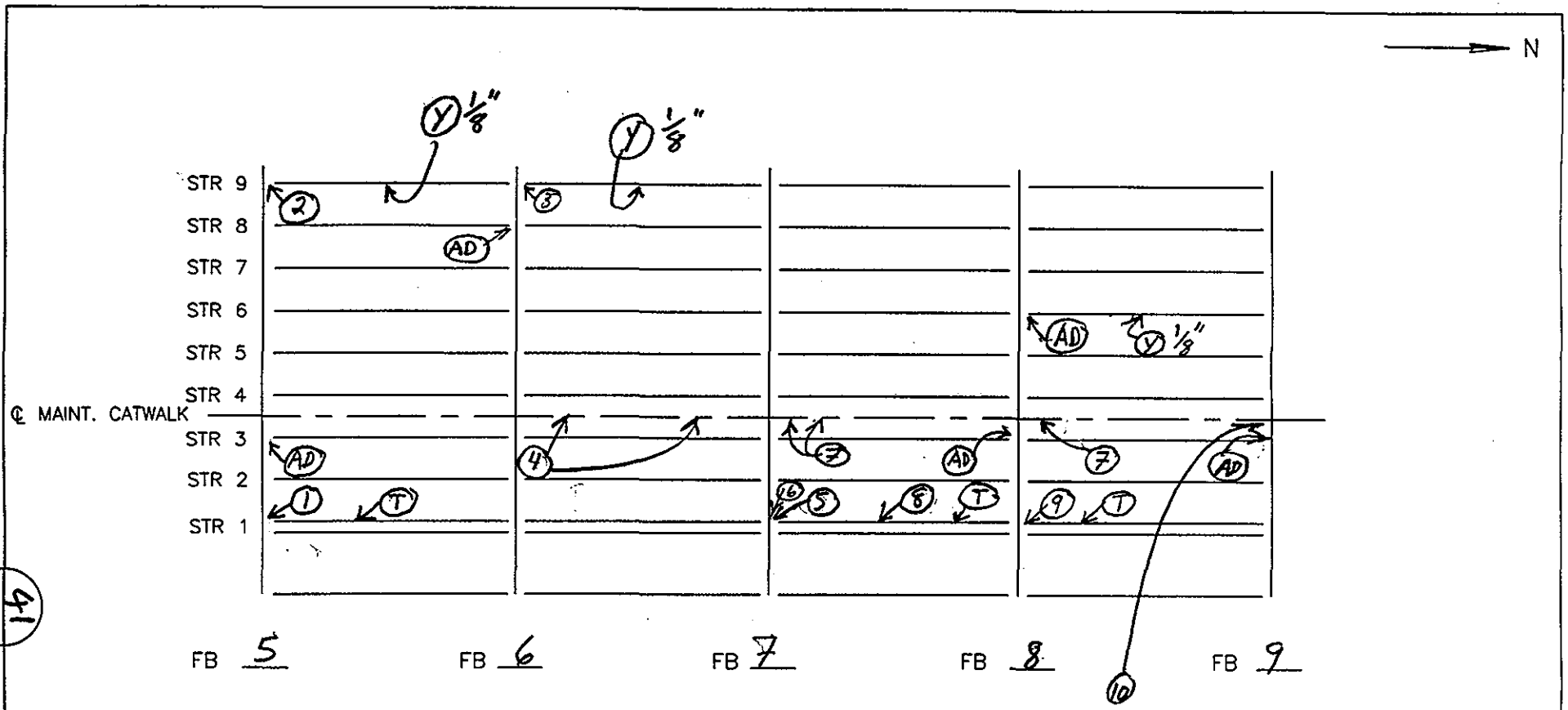

(10) 3'L catwalk handrail removed (to provide access to ladder to Pier 1)

SPAN 3

NOTES:
(1) 1/16" to 1/8" pit × 18" H on web
(2) 1/8" pit × 4" H on web
(3) 1/8" pit × 9" H on web
(4) 1" × 4" corrosion hole in catwalk grating support fill PP
(5) 4" H × 16" L Rpr PP welded to web C2-24-3
(6) 1/8" pit × 6" H on str. web
(7) 2" φ corrosion hole in catwalk grating support ✗
(8) 1/8" pit × 2" W, top, W bot FL
(9) 1/8" pit × 2" H on web

FLOOR SYSTEM EL

DEPARTMENT OF THE ARMY
NEW ENGLAND DISTRICT CORPS OF ENGINEERS

SAGAMORE HIGHWAY BRIDGE
ROUTINE INSPECTION

NOTES BY: LICHTENSTEIN
CONSULTING ENGINEERS

JOB #1986	DATE: 4/13/01
CREW: SP, EL	SHEET 2 OF 11

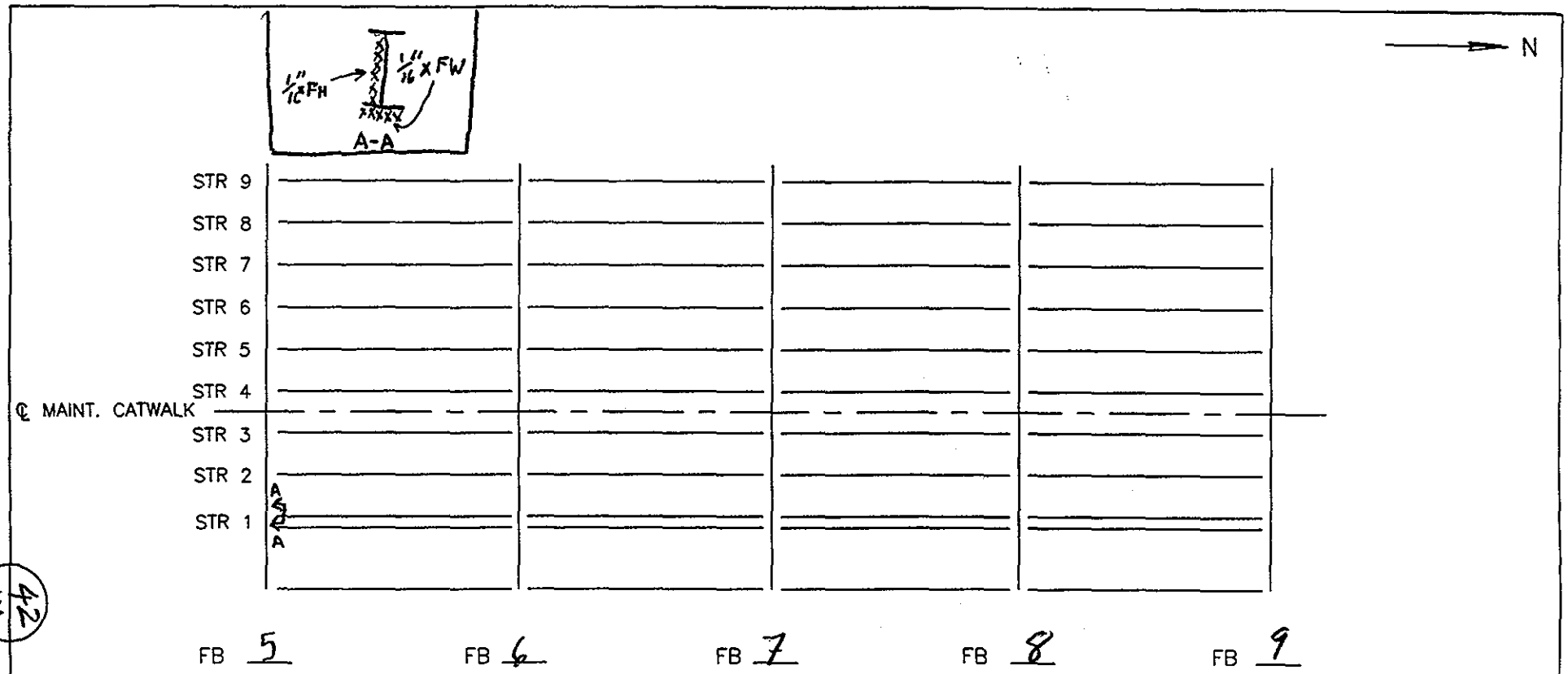

42
109

SPAN 3

NOTES:

FLOOR SYSTEM EL

DEPARTMENT OF THE ARMY
NEW ENGLAND DISTRICT CORPS OF ENGINEERS

SAGAMORE HIGHWAY BRIDGE
ROUTINE INSPECTION

NOTES BY: LICHTENSTEIN
CONSULTING ENGINEERS

JOB #1986	DATE: 3/28/01
CREW: SP, SD	SHEET 3 OF 3

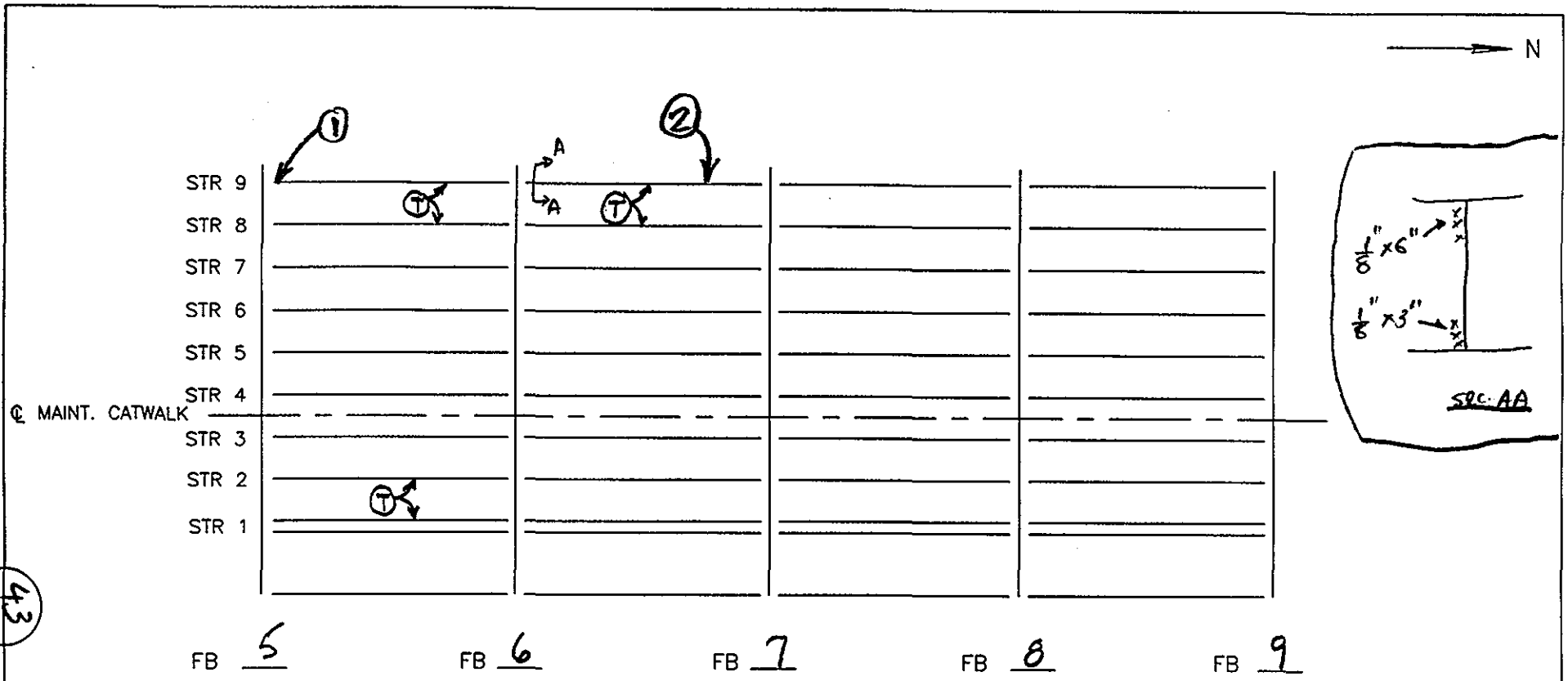

43
63

SPAN 3

NOTES:
(1) 1/8"x1'2" PIT. ON U/S OF TOP FL
(2) 1/4"x FW PIT. ON TOP OF W. BOT FL + 1/8"x2" PIT ON WEB

FLOOR SYSTEM	
DEPARTMENT OF THE ARMY NEW ENGLAND DISTRICT CORPS OF ENGINEERS	
SAGAMORE HIGHWAY BRIDGE ROUTINE INSPECTION	
NOTES BY: LICHTENSTEIN CONSULTING ENGINEERS	
JOB #1986	DATE: 3.29.01
CREW: EL, AP	SHEET 1 OF 3

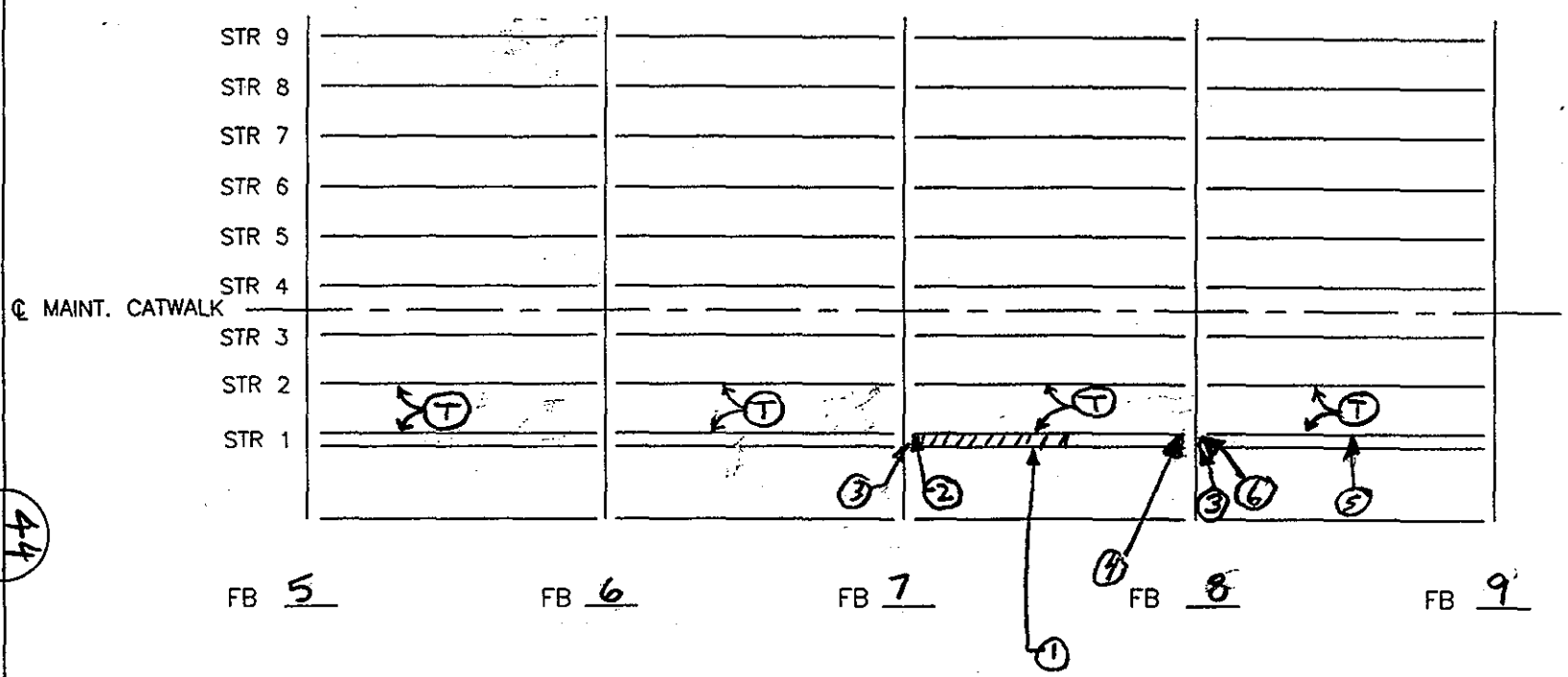

44
193

SPAN 3

NOTES: ① 20'L Section of Rusted thru deck pan w/ 1'x6"x1" conc. spall
② 2- 1/4" pit x 1" ø on E. Face of String, 1 Web & also 15"L x 3" HPL welded to base of Web.
③ Random Areas of 1/4" pit x 2" ø on FB stiff OSL @ Str. 1
④ 1/16" pitting x 7" H on web
⑤ 3/16" pitting x 2" H on web plus 1/16" pitting x FW on top of bot PL
⑥ 3/4" IR bet Str. web and stiffener

FLOOR SYSTEM EL	
DEPARTMENT OF THE ARMY NEW ENGLAND DISTRICT CORPS OF ENGINEERS	
SAGAMORE HIGHWAY BRIDGE ROUTINE INSPECTION	
NOTES BY: LICHTENSTEIN CONSULTING ENGINEERS	
JOB #1986	DATE: 3/29/01
CREW: SD, SP	SHEET 2 OF 3

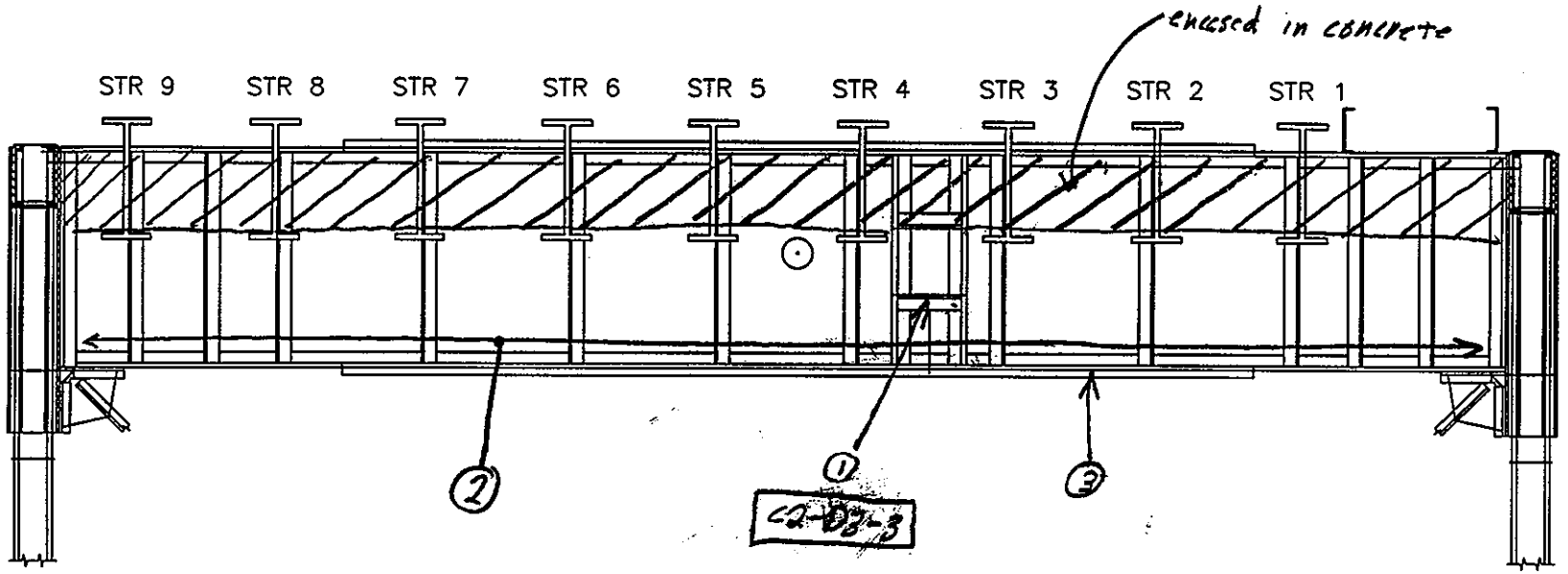

SPAN 3

FLOORBEAM 0 S ELEV.

NOTES: ① 2-1/8"Φ holes plus 2-1/2"Φ Hole plus 3/4" x 2" hole in the OSL of bot catwalk portal ∡

② 1/2" remaining of a PL welded to FB web above bot FL of FB ∡ for FL of FB.

③ 1/8" x 1/2" pitting loss on top edge of bot cov. PL for FL of cov PL

FLOORBEAM ELEVATION EL	
DEPARTMENT OF THE ARMY NEW ENGLAND DISTRICT CORPS OF ENGINEERS	
SAGAMORE HIGHWAY BRIDGE ROUTINE INSPECTION	
NOTES BY: LICHTENSTEIN CONSULTING ENGINEERS	
JOB #1986	DATE: 3/26/01
CREW: SD, SP, AP	SHEET 1 OF 6

45
199

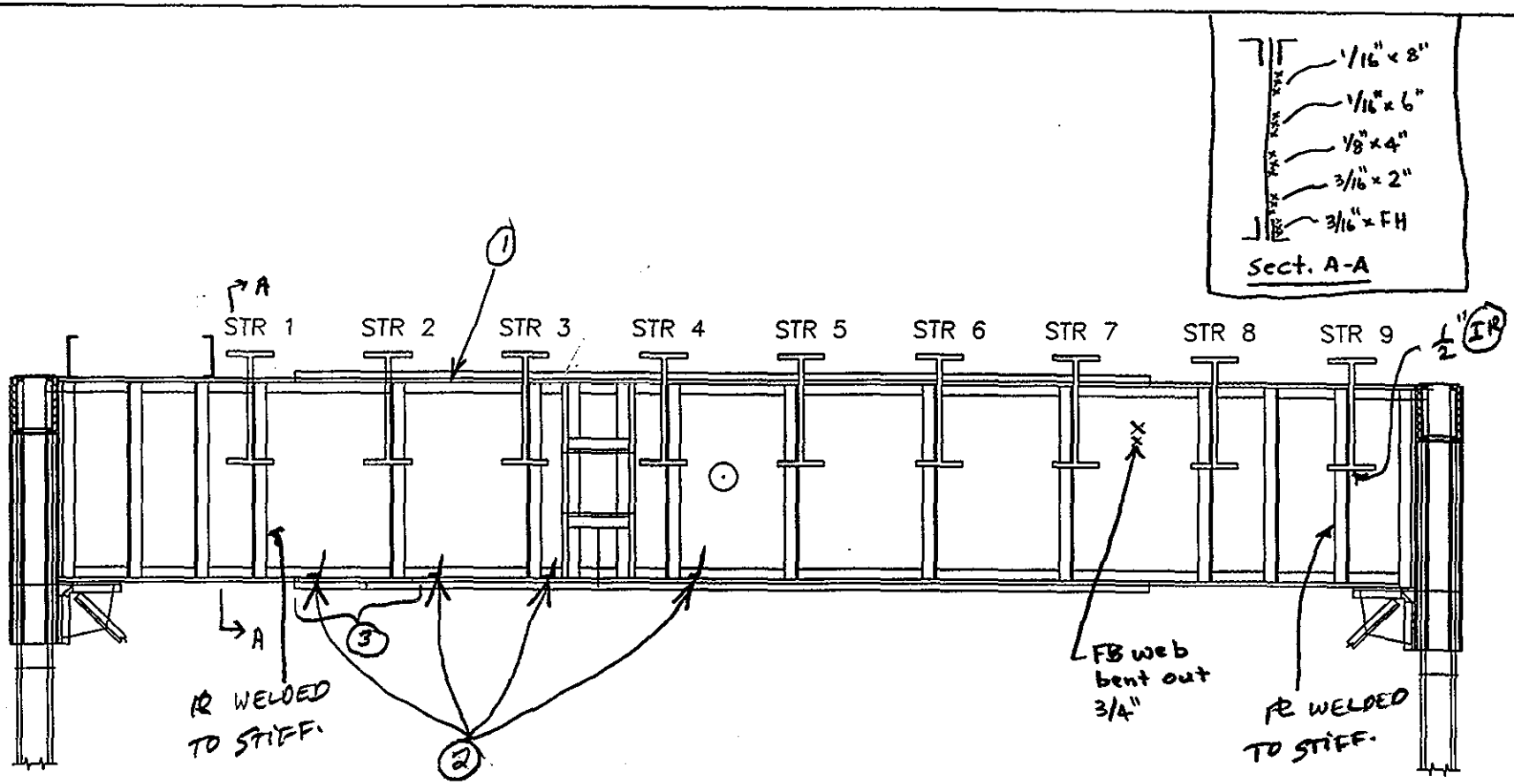

SPAN 3

FLOORBEAM 0 N ELEV.

NOTES: (1) Blank holes in top fl & of FB matching pattern on bot fl for FL
(2) 4"L welded stub ∡'s to top of bot fl & of FB
(3) 1/8"x1"x6'L piring along top edge of bot cov pl.

FLOORBEAM ELEVATION EL

DEPARTMENT OF THE ARMY
NEW ENGLAND DISTRICT CORPS OF ENGINEERS

SAGAMORE HIGHWAY BRIDGE
ROUTINE INSPECTION

NOTES BY: LICHTENSTEIN
CONSULTING ENGINEERS

JOB #1986 | DATE: 3/26/01

CREW: SP, SD, AP | SHEET 2 OF 6

46
199

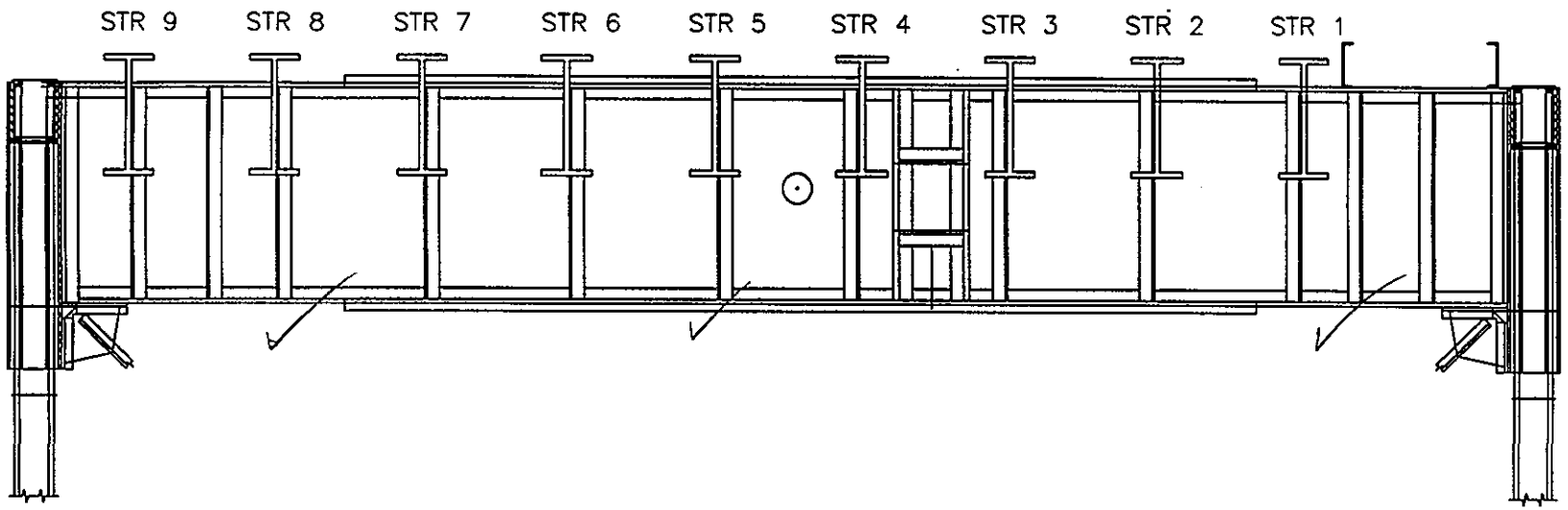

SPAN 3

FLOORBEAM 1 S ELEV.

NOTES:

FLOORBEAM ELEVATION EL

DEPARTMENT OF THE ARMY
NEW ENGLAND DISTRICT CORPS OF ENGINEERS

SAGAMORE HIGHWAY BRIDGE
ROUTINE INSPECTION

NOTES BY: LICHTENSTEIN
CONSULTING ENGINEERS

JOB #1986 DATE: 03/26/01

CREW: AI, SD, SP SHEET 4 OF 6

47
199

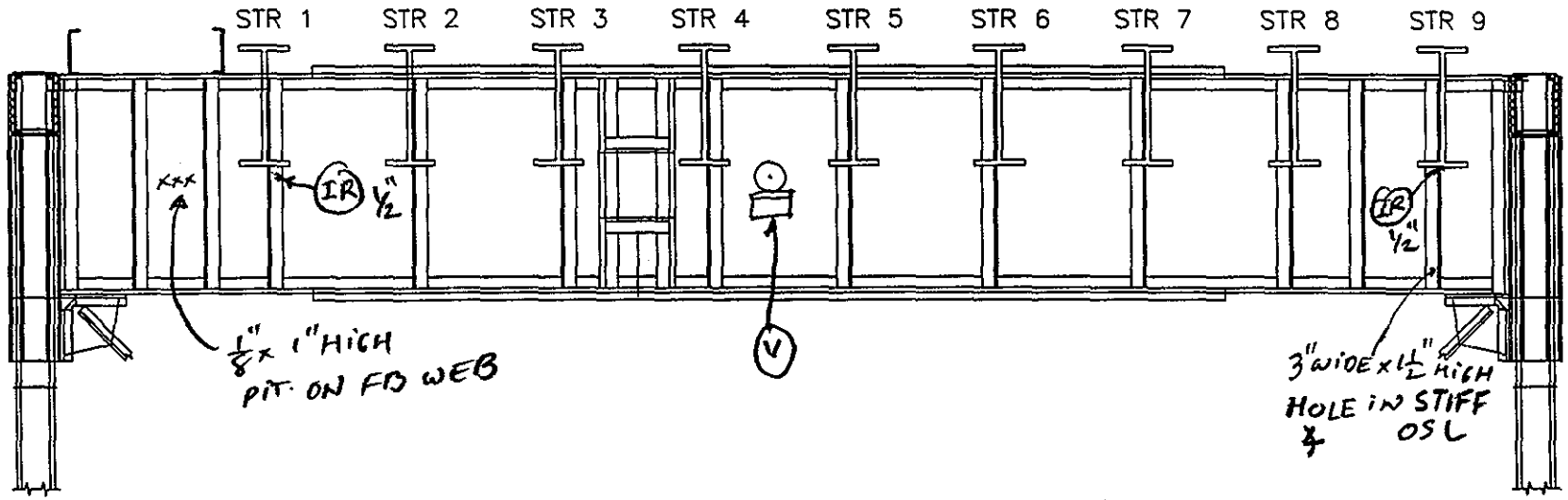

48
199

SPAN 3

FLOORBEAM 1 N ELEV.

NOTES:

FLOORBEAM ELEVATION EL

DEPARTMENT OF THE ARMY
NEW ENGLAND DISTRICT CORPS OF ENGINEERS

SAGAMORE HIGHWAY BRIDGE
ROUTINE INSPECTION

NOTES BY: LICHTENSTEIN
CONSULTING ENGINEERS

JOB #1986 | DATE: 03/26/01

CREW: AP, SD, SP | SHEET 5 OF 6

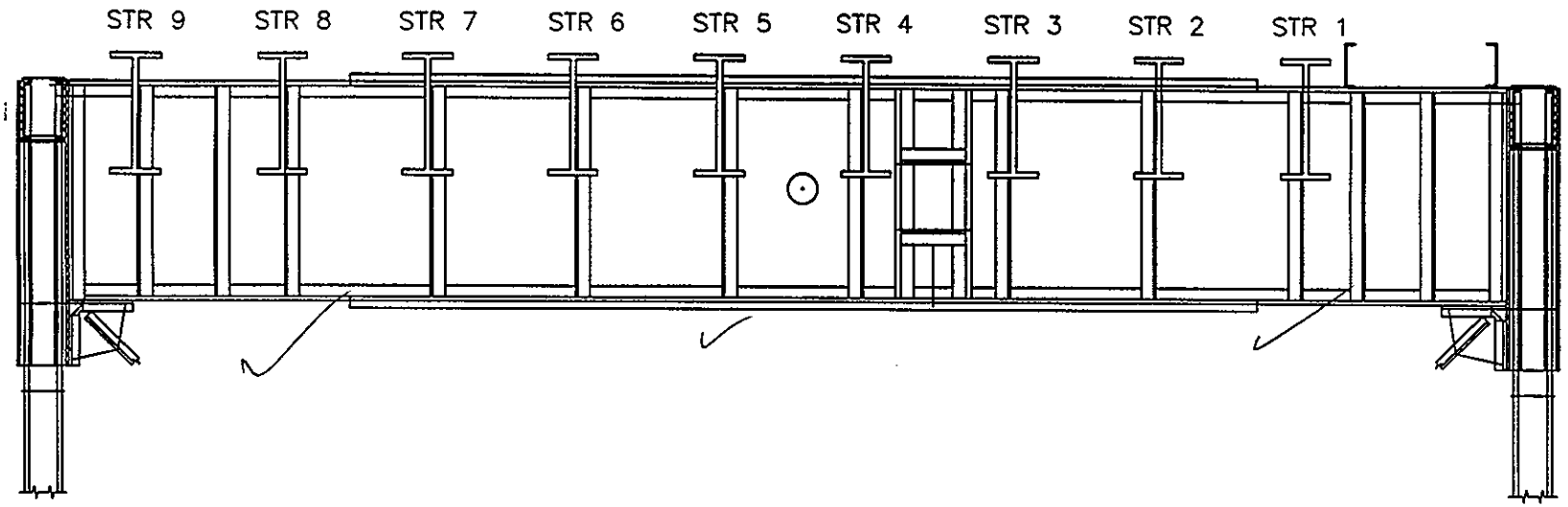

49
165

SPAN 3

FLOORBEAM 2 S ELEV.

NOTES:

FLOORBEAM ELEVATION EL

DEPARTMENT OF THE ARMY
NEW ENGLAND DISTRICT CORPS OF ENGINEERS

SAGAMORE HIGHWAY BRIDGE
ROUTINE INSPECTION

NOTES BY: LICHTENSTEIN
CONSULTING ENGINEERS

JOB #1986 DATE: 03/26/01

CREW: AP, SD, SP SHEET 6 OF 6

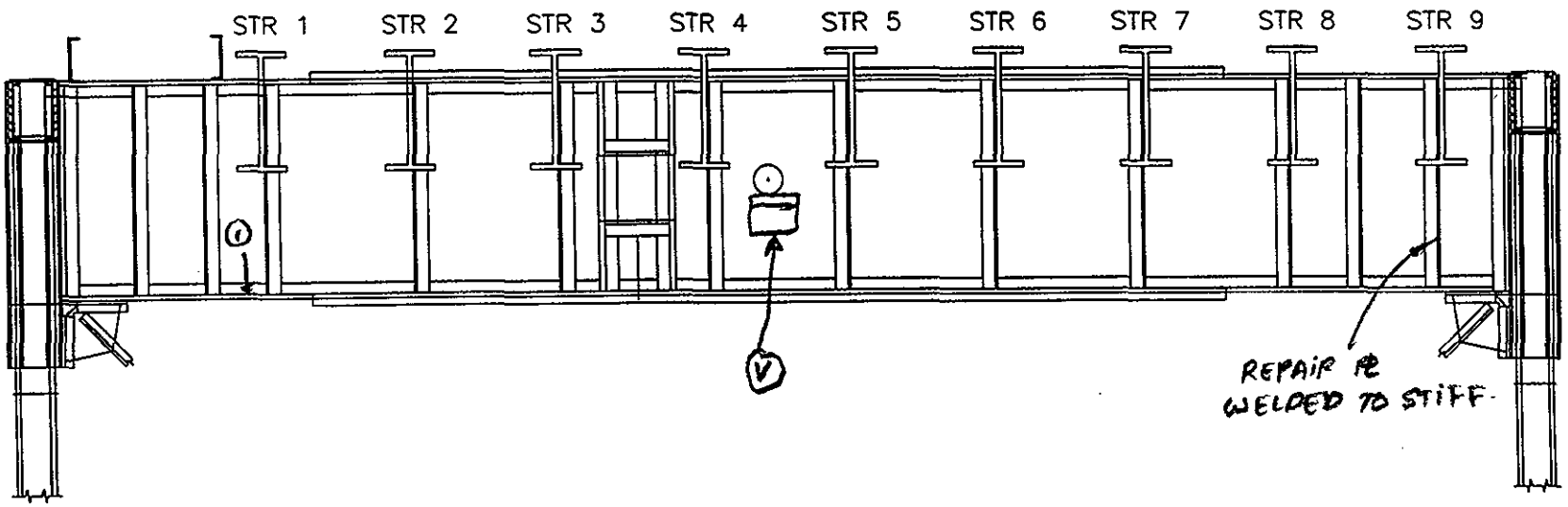

50
199

SPAN 3

FLOORBEAM 2 N ELEV.

NOTES: (1) 1/8" x FW PIT ON TOP OF BOT. FL. ℄.

FLOORBEAM ELEVATION EL

DEPARTMENT OF THE ARMY
NEW ENGLAND DISTRICT CORPS OF ENGINEERS

SAGAMORE HIGHWAY BRIDGE
ROUTINE INSPECTION

NOTES BY: LICHTENSTEIN
CONSULTING ENGINEERS

JOB #1986 DATE: 03/28/01

CREW: AP, SD, SP SHEET 2 OF 7

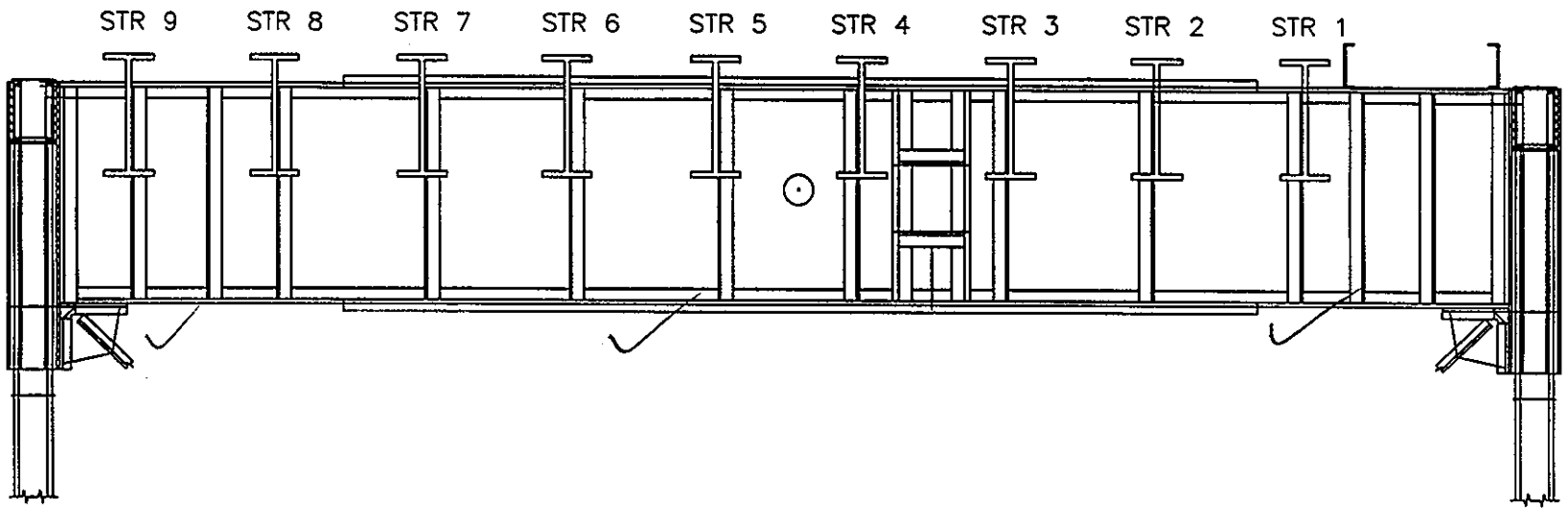

51
139

SPAN 3

FLOORBEAM 3 S ELEV.

NOTES:

FLOORBEAM ELEVATION EL

DEPARTMENT OF THE ARMY
NEW ENGLAND DISTRICT CORPS OF ENGINEERS

SAGAMORE HIGHWAY BRIDGE
ROUTINE INSPECTION

NOTES BY: LICHTENSTEIN
CONSULTING ENGINEERS

JOB #1986 DATE: 03/28/01

CREW: AP, SD, SP SHEET 3 OF 7

52
133

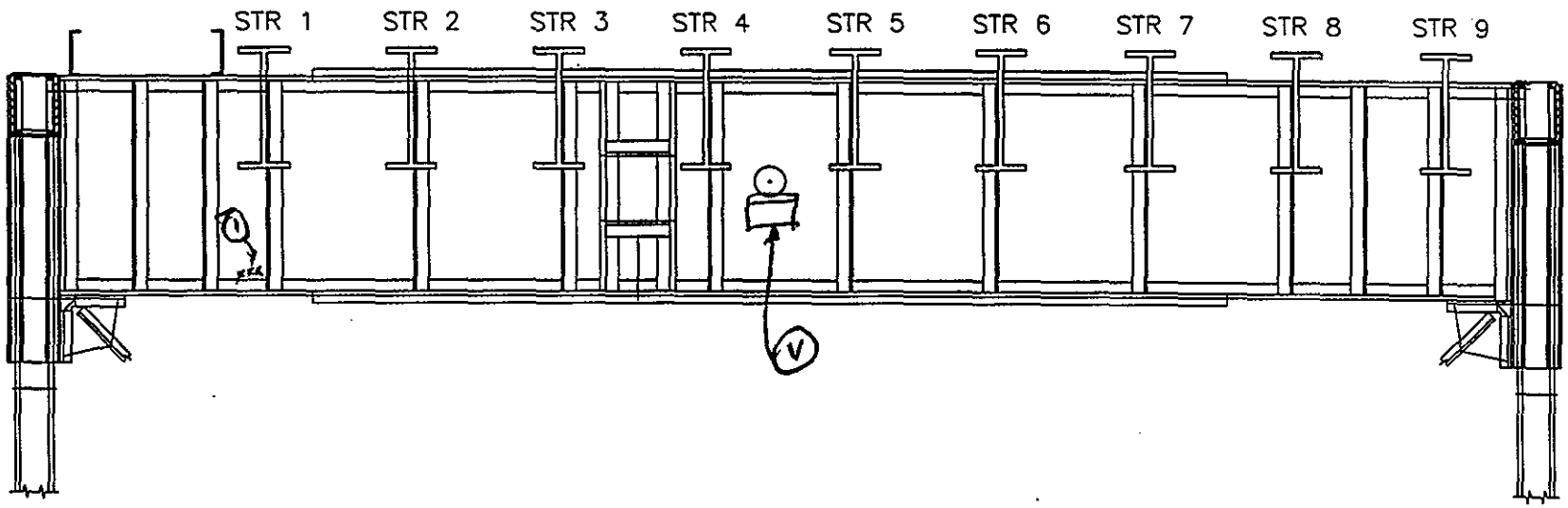

SPAN 3

FLOORBEAM 3 N ELEV.

NOTES: 1 1/8" x 1" HIGH PIT. ON FB WEB

FLOORBEAM ELEVATION EL

DEPARTMENT OF THE ARMY
NEW ENGLAND DISTRICT CORPS OF ENGINEERS

SAGAMORE HIGHWAY BRIDGE
ROUTINE INSPECTION

NOTES BY: LICHTENSTEIN
CONSULTING ENGINEERS

JOB #1986 DATE: 03/28/01

CREW: AP, SD, SP SHEET 4 OF 7

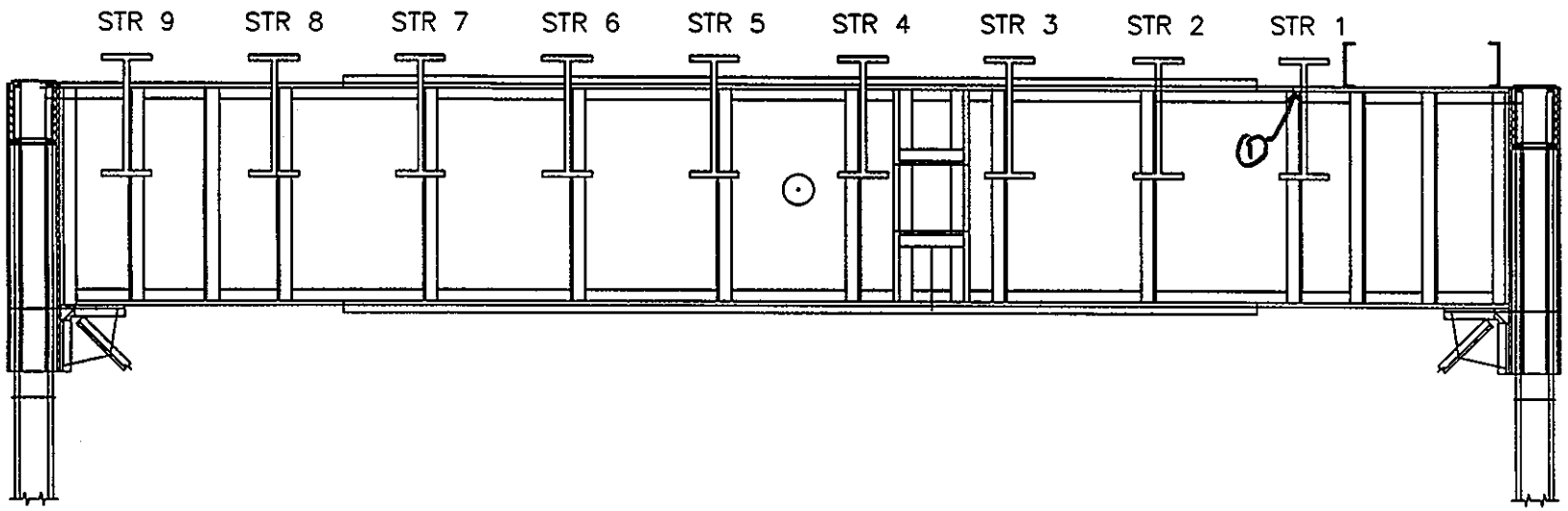

SPAN 3

FLOORBEAM 4 S ELEV.

NOTES: (1) 1/16" x 3" WIDE PIT. ON U/S OF TOP FL. X.

FLOORBEAM ELEVATION EL

DEPARTMENT OF THE ARMY
NEW ENGLAND DISTRICT CORPS OF ENGINEERS

SAGAMORE HIGHWAY BRIDGE
ROUTINE INSPECTION

NOTES BY: LICHTENSTEIN
CONSULTING ENGINEERS

JOB #1986	DATE: 03/28/01
CREW: AP, SD, SP	SHEET 5 OF 7

53
199

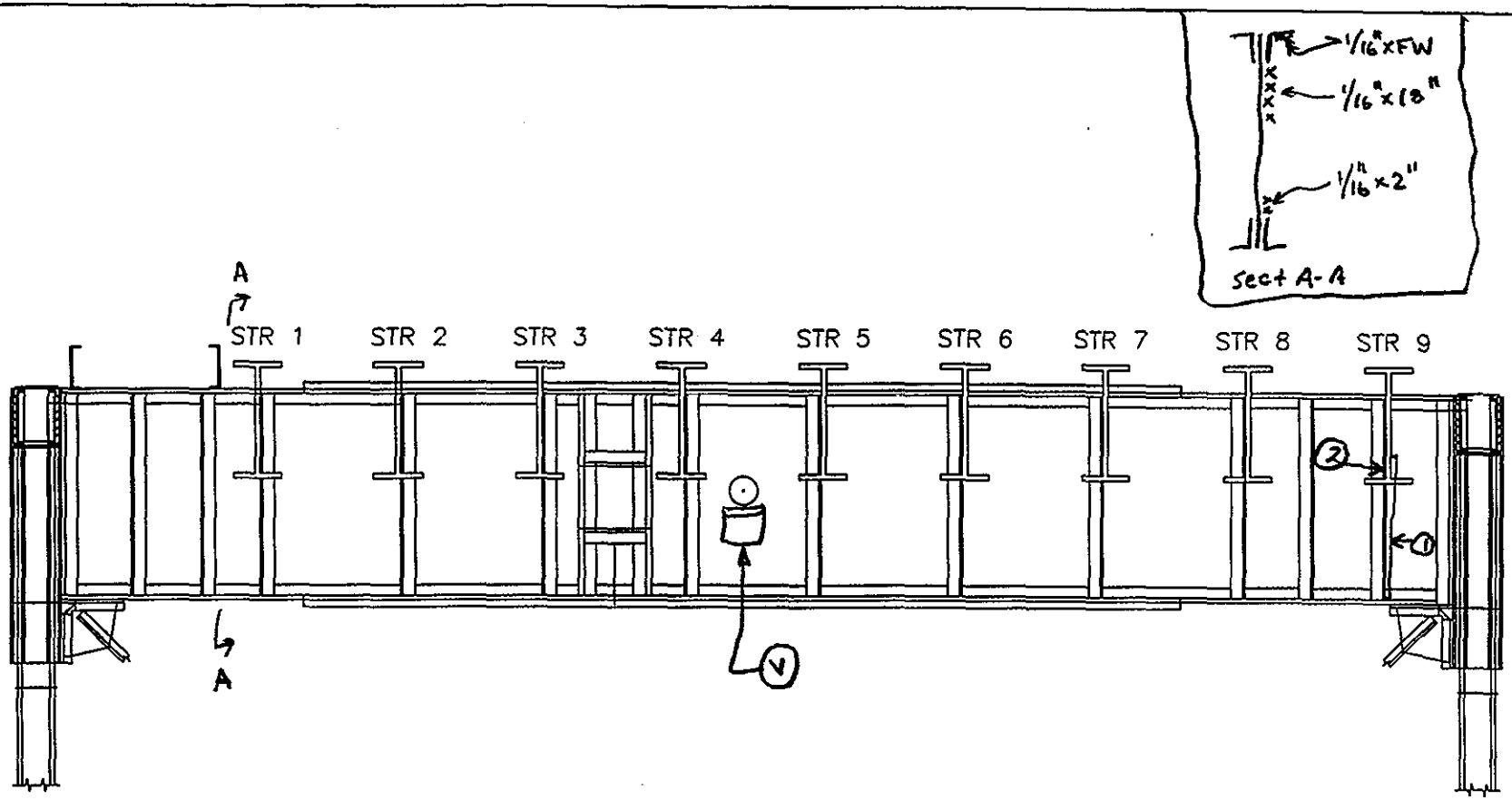

54
199

SPAN 3

FLOORBEAM 4 N ELEV.

NOTES:
1. 4"x3"H welded PL to stiffener
2. 1" IR bet. web of str and stiffener

FLOORBEAM ELEVATION EL

DEPARTMENT OF THE ARMY
NEW ENGLAND DISTRICT CORPS OF ENGINEERS

SAGAMORE HIGHWAY BRIDGE
ROUTINE INSPECTION

NOTES BY: LICHTENSTEIN
CONSULTING ENGINEERS

JOB #1986 | DATE: 03/28/01

CREW: AP, SD, SP | SHEET 6 OF 7

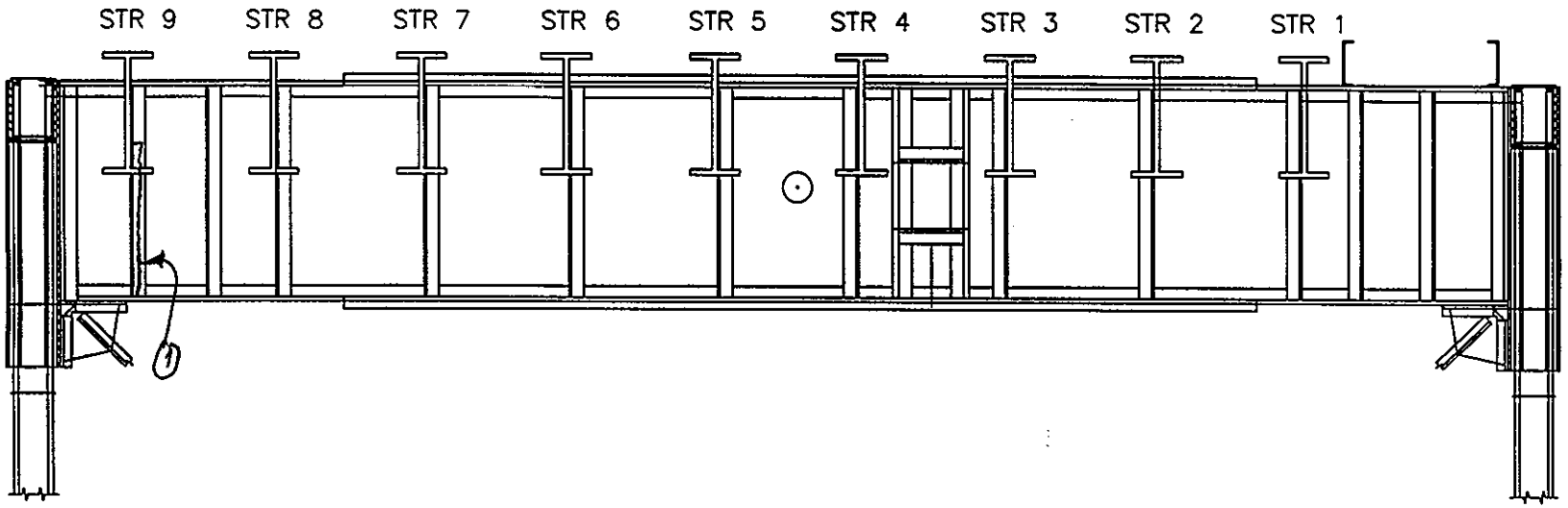

55
199

SPAN 3

FLOORBEAM 5 S ELEV.

NOTES: (1) 5" WIDE x 3' HIGH PL WELDED TO STIFFENER

FLOORBEAM ELEVATION EL

DEPARTMENT OF THE ARMY
NEW ENGLAND DISTRICT CORPS OF ENGINEERS

SAGAMORE HIGHWAY BRIDGE
ROUTINE INSPECTION

NOTES BY: LICHTENSTEIN
CONSULTING ENGINEERS

JOB #1986 DATE: 03/28/01

CREW: AP, SD, SP SHEET 7 OF 7

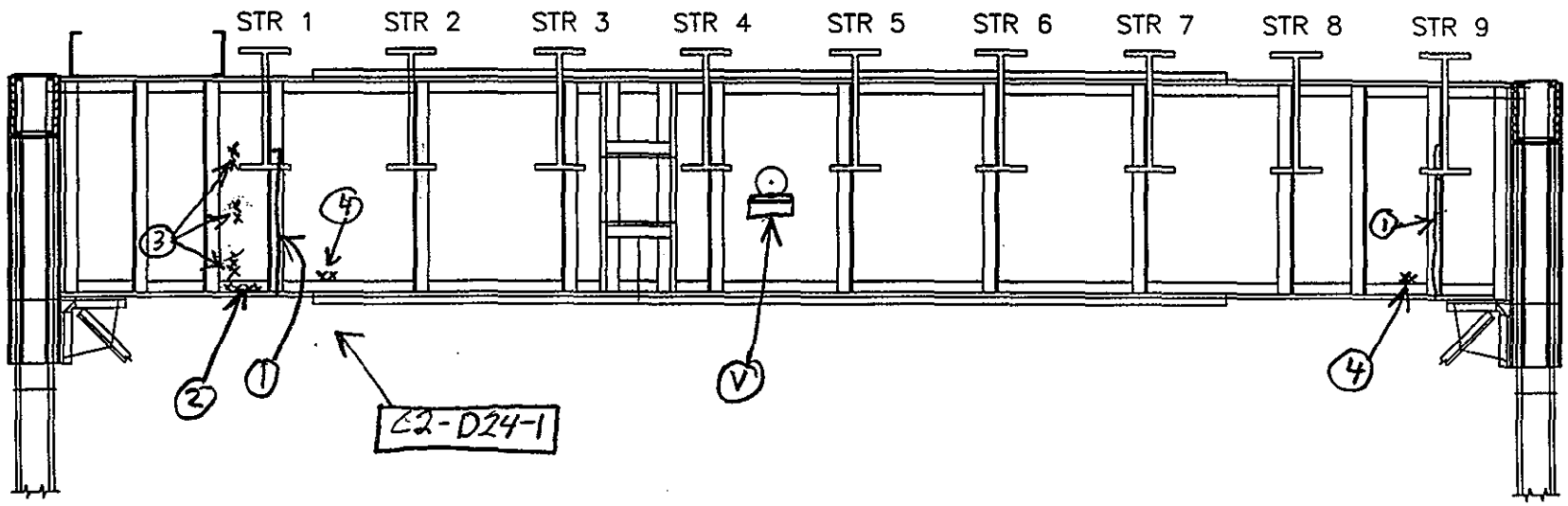

56
133

SPAN 3
FLOORBEAM 5 N ELEV.

NOTES: (1) 5"W x 30"H Rpr PL welded to stiffener
(2) 1/8" pit x FH of vert leg of bot FL X
(3) 1/8" pit x 2"H
(4) 3/16" pit x 1"H

FLOORBEAM ELEVATION EL

DEPARTMENT OF THE ARMY
NEW ENGLAND DISTRICT CORPS OF ENGINEERS

SAGAMORE HIGHWAY BRIDGE
ROUTINE INSPECTION

NOTES BY: LICHTENSTEIN
CONSULTING ENGINEERS

JOB #1986 DATE: 4/13/01
CREW: SP, EL SHEET 1 OF 11

57
195

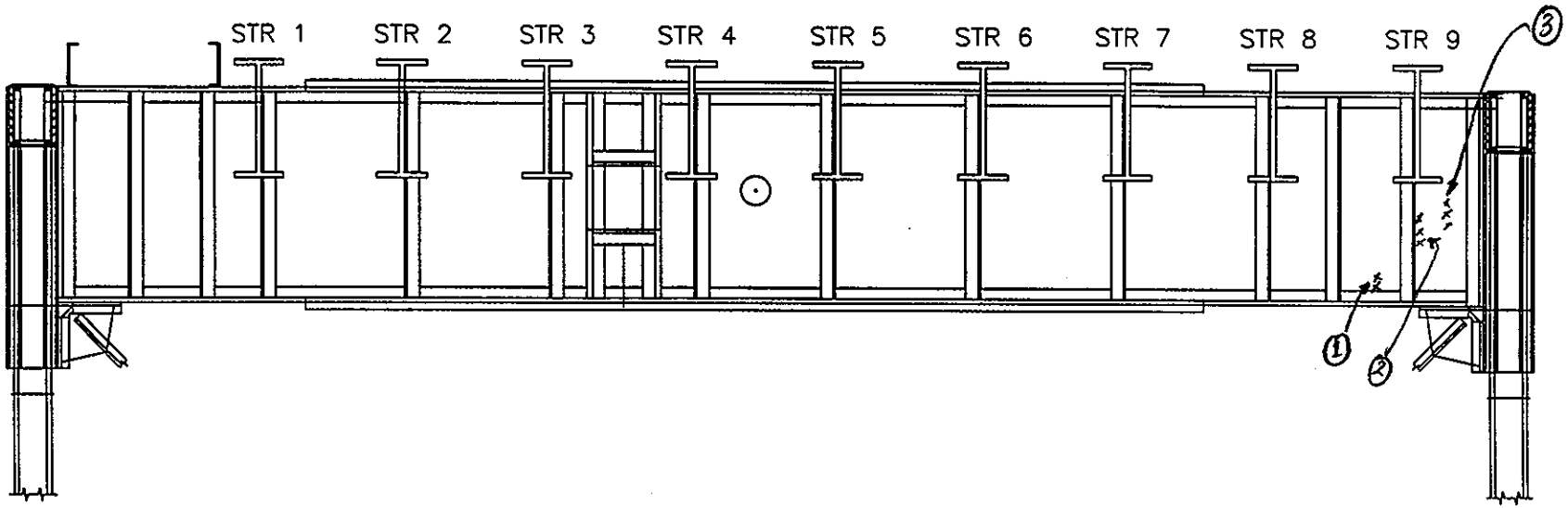

SPAN 3

FLOORBEAM 5 N ELEV.

NOTES:
1. 3/16" x 2" PIT ON FB WEB
2. 1/8" x 6" PIT ON FB WEB
3. 1/8" x 4" PIT ON FB WEB

FLOORBEAM ELEVATION EL

DEPARTMENT OF THE ARMY
NEW ENGLAND DISTRICT CORPS OF ENGINEERS

SAGAMORE HIGHWAY BRIDGE
ROUTINE INSPECTION

NOTES BY: LICHTENSTEIN
CONSULTING ENGINEERS

JOB #1986 DATE: 03/29/01

CREW: EL, AP SHEET 3 OF 3

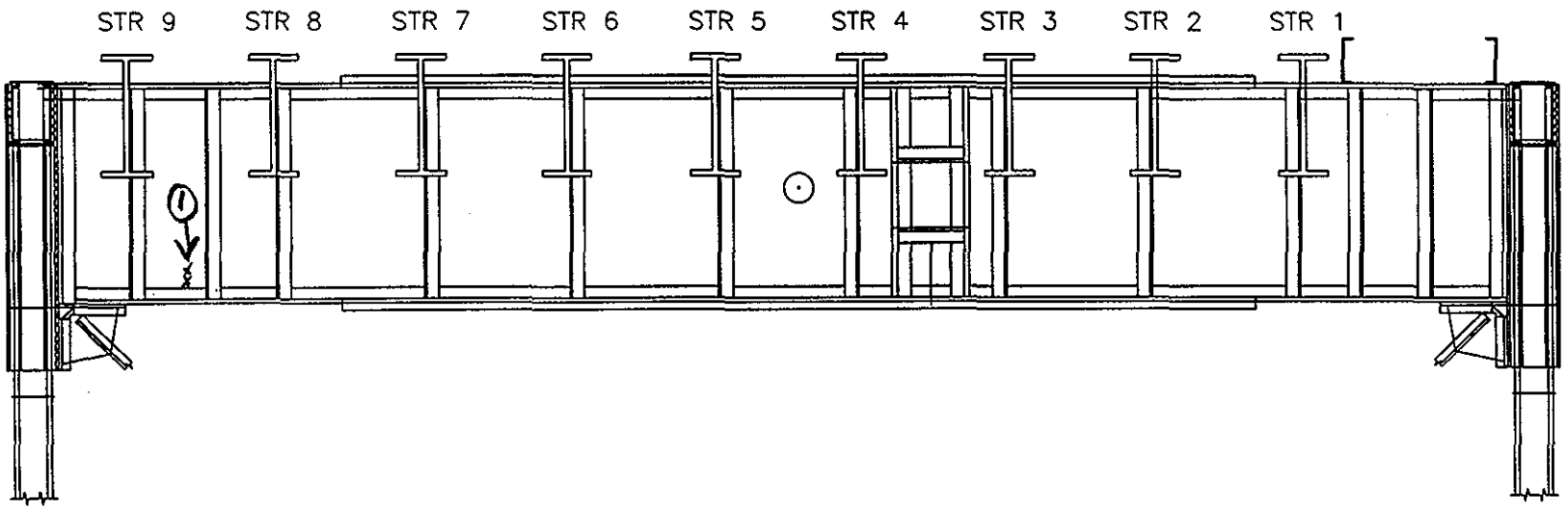

58
199

SPAN 3

FLOORBEAM 6 S ELEV.

NOTES: 1 1/8" pit x 1" H

FLOORBEAM ELEVATION EL

DEPARTMENT OF THE ARMY
NEW ENGLAND DISTRICT CORPS OF ENGINEERS

SAGAMORE HIGHWAY BRIDGE
ROUTINE INSPECTION

NOTES BY: LICHTENSTEIN
CONSULTING ENGINEERS

JOB #1986 DATE: 4/13/01

CREW: SP, EL SHEET 3 OF 11

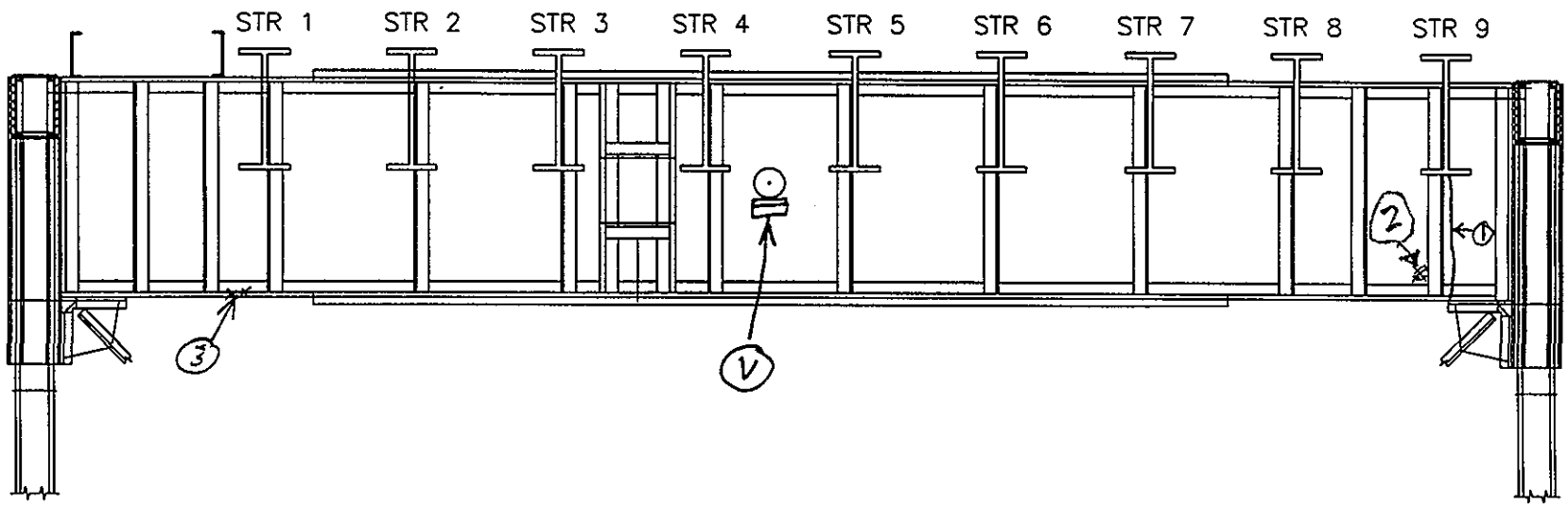

SPAN 3

FLOORBEAM 6 N ELEV.

NOTES:
1. Rpr PL welded to stiffener
2. 1/8"x2"H pit on web
3. 1/8"x2"V pit on top of bot leg of PL 4

FLOORBEAM ELEVATION EL

DEPARTMENT OF THE ARMY
NEW ENGLAND DISTRICT CORPS OF ENGINEERS

SAGAMORE HIGHWAY BRIDGE
ROUTINE INSPECTION

NOTES BY: LICHTENSTEIN
CONSULTING ENGINEERS

JOB #1986 DATE: 4/13/01

CREW: SP, EL SHEET 4 OF 11

59
199

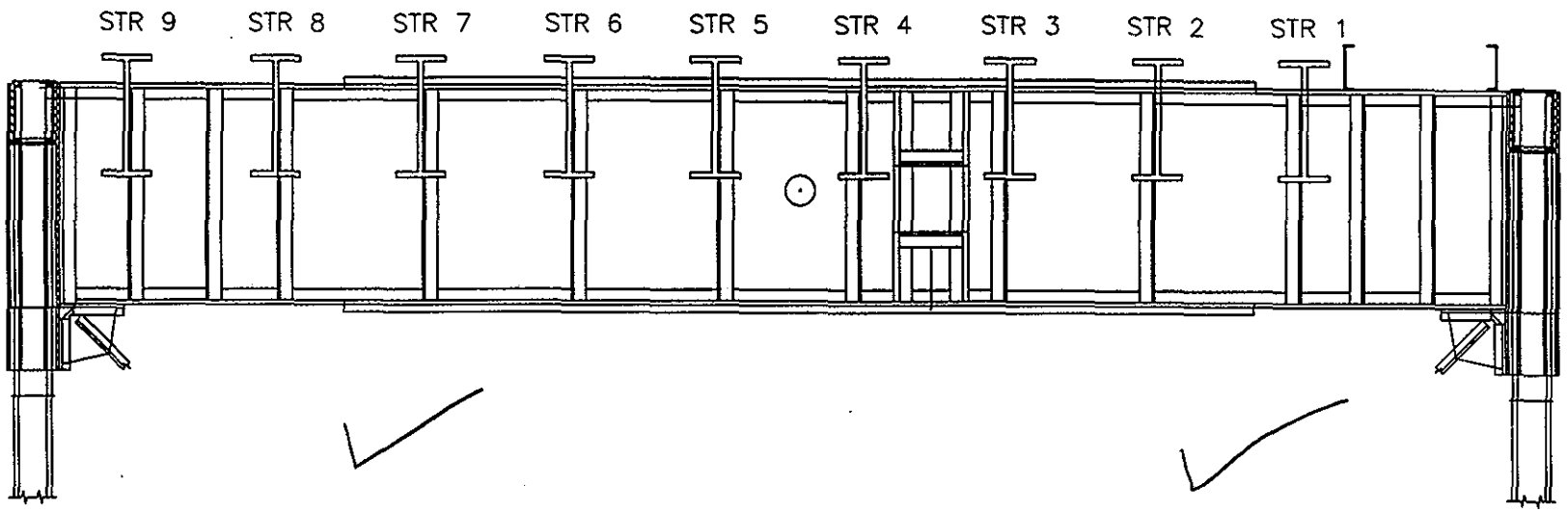

60
(61)

SPAN 3

FLOORBEAM 7 S ELEV.

NOTES:

FLOORBEAM ELEVATION EL

DEPARTMENT OF THE ARMY
NEW ENGLAND DISTRICT CORPS OF ENGINEERS

SAGAMORE HIGHWAY BRIDGE
ROUTINE INSPECTION

NOTES BY: LICHTENSTEIN
CONSULTING ENGINEERS

JOB #1986 DATE: 4/13/01

CREW: SP, EL SHEET 5 OF 11

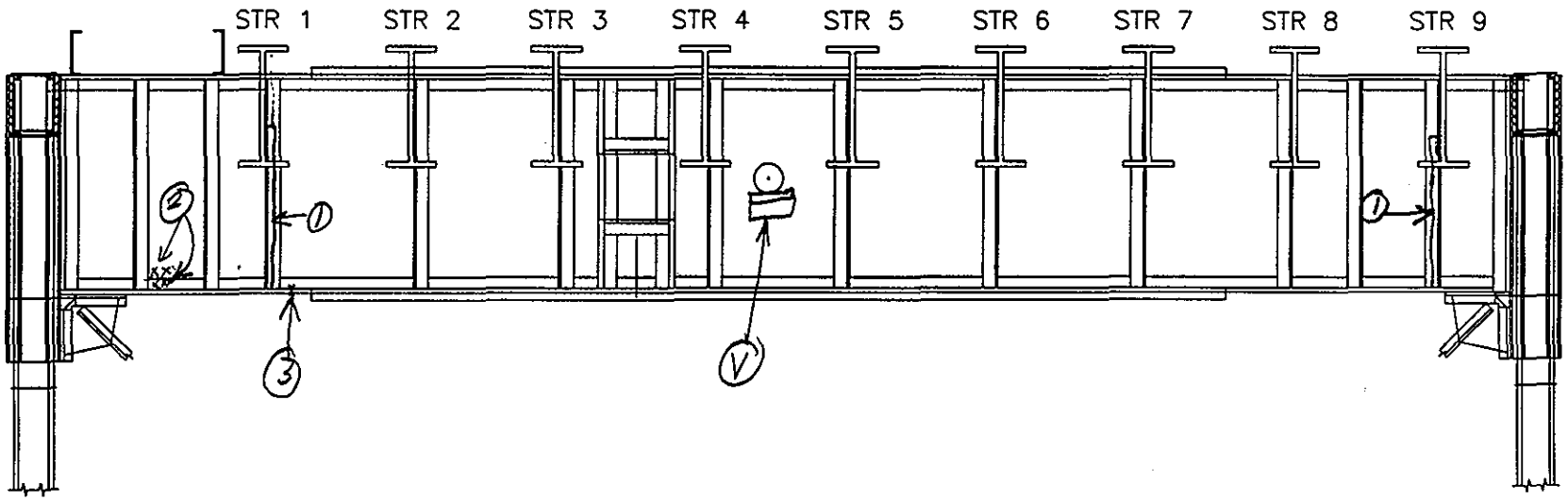

SPAN 3

FLOORBEAM 7 N ELEV.

NOTES: ① Rpr ⅊ welded to stiffener
② 1/8" x 1" H. pit on web and on vert leg of bot FL ⅊
③ 1/8" pit x 4" Wide on top of bot FL

FLOORBEAM ELEVATION EL	
DEPARTMENT OF THE ARMY NEW ENGLAND DISTRICT CORPS OF ENGINEERS	
SAGAMORE HIGHWAY BRIDGE ROUTINE INSPECTION	
NOTES BY: LICHTENSTEIN CONSULTING ENGINEERS	
JOB #1986	DATE: 4/13/01
CREW: SP, EL	SHEET 6 OF 11

61
199

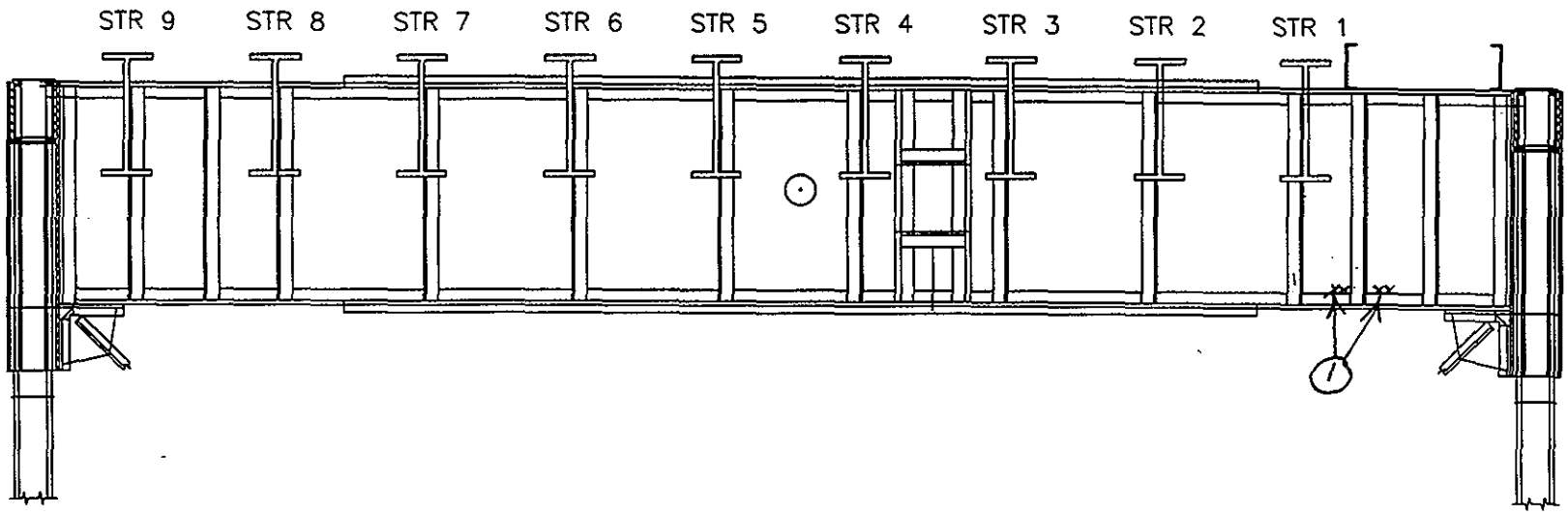

62
199

SPAN 3

FLOORBEAM 8 S ELEV.

NOTES: 1 1/8"x 2"H pit on web

FLOORBEAM ELEVATION ℄

DEPARTMENT OF THE ARMY
NEW ENGLAND DISTRICT CORPS OF ENGINEERS

SAGAMORE HIGHWAY BRIDGE
ROUTINE INSPECTION

NOTES BY: LICHTENSTEIN
CONSULTING ENGINEERS

JOB #1986 | DATE: 4/13/01

CREW: SP, EL | SHEET 7 OF 11

63
199

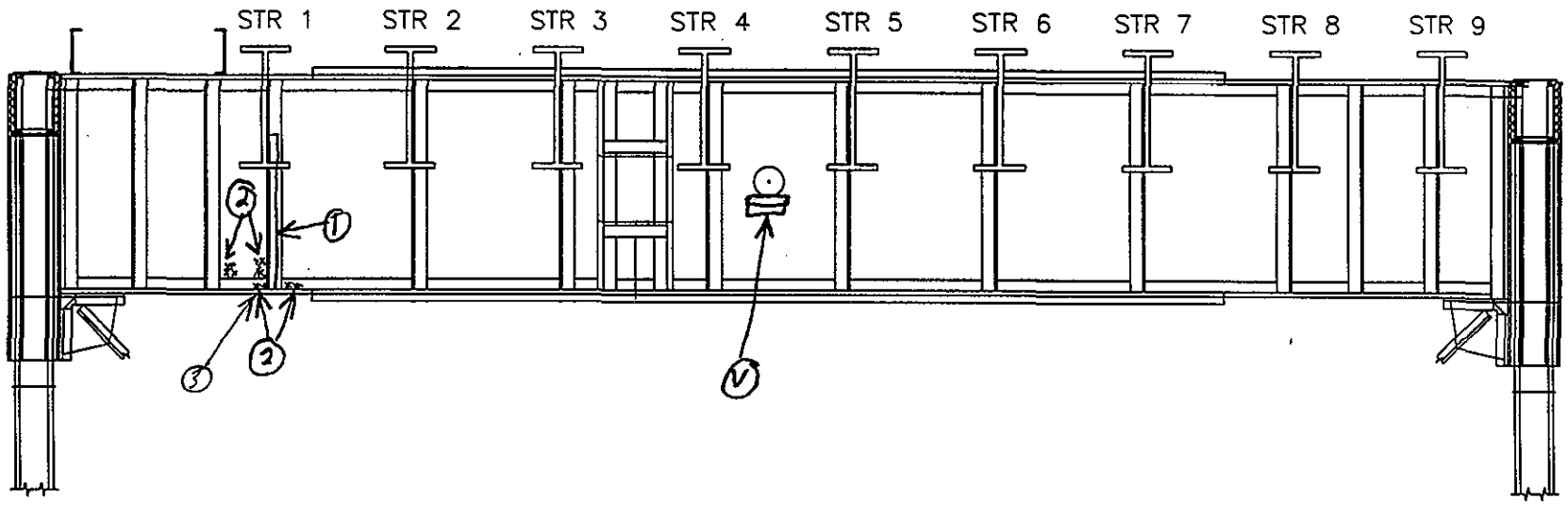

SPAN 3

FLOORBEAM 8 N ELEV.

NOTES:
1. Rpr PP welded to stiffener
2. 3/16" pit × 3" H
3. 3/16" pit × FW on bot FL

FLOORBEAM ELEVATION EL

DEPARTMENT OF THE ARMY
NEW ENGLAND DISTRICT CORPS OF ENGINEERS

SAGAMORE HIGHWAY BRIDGE
ROUTINE INSPECTION

NOTES BY: LICHTENSTEIN
CONSULTING ENGINEERS

JOB #1986 DATE: 4/13/01

CREW: SB,EL SHEET 8 OF 11

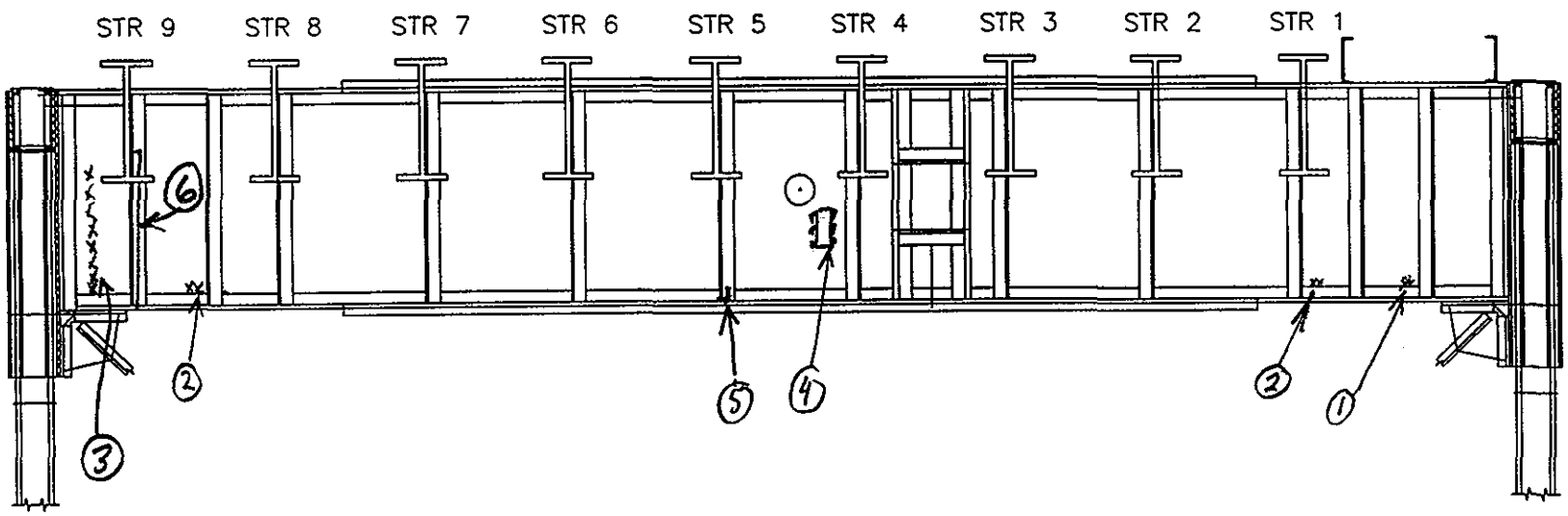

64
199

SPAN 3

FLOORBEAM 9 S ELEV.

NOTES:
1. 1/8" pit x 2" H on web
2. 1/8" pit x 1" H on web
3. 1/4" pit x 3" H plus 1/16" pit x 24" H on web
4. 3" W x 7" L ⊏ welded to web w/ 1" vert welds [C2-D29-5]
5. 1" X welded to top of bot Fl X
6. Rpr Pl welded to stiff X.

FLOORBEAM ELEVATION ℄	
DEPARTMENT OF THE ARMY NEW ENGLAND DISTRICT CORPS OF ENGINEERS	
SAGAMORE HIGHWAY BRIDGE ROUTINE INSPECTION	
NOTES BY: LICHTENSTEIN CONSULTING ENGINEERS	
JOB #1986	DATE: 4/13/01
CREW: SP, EL	SHEET 9 OF 11

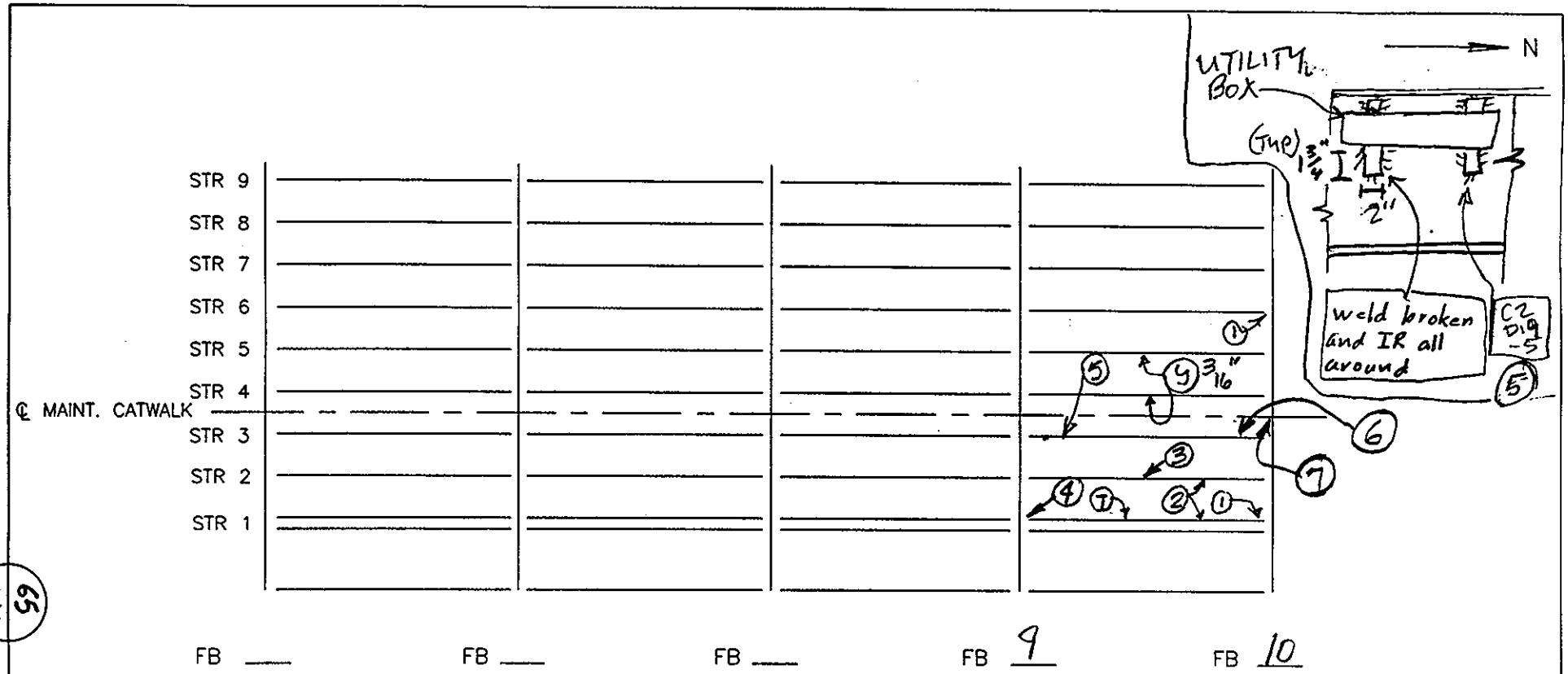

SPAN 1

NOTES:

1. 1/8"×2" PITTING ON WEB
2. BENT PL'S WELDED TO BOT FL [C1: D11-7]
3. 1/8"×4" PITTING ON U/S BOT FL + (9) 1/4" ON E. BOT FL.
4. 1/8"×2" PITTING AROUND 1/8" Ø CORROSION HOLE IN WEB [C1: D11-8]
5. SEE SKETCH
6. UTILITY CONDUIT UNSUPPORTED [C2: D20-1]
7. CATWALK HANDRAIL REMOVED AROUND ACCESS LADDER TO PIER [C2: D20-1]

FLOOR SYSTEM EL	
DEPARTMENT OF THE ARMY NEW ENGLAND DISTRICT CORPS OF ENGINEERS	
SAGAMORE HIGHWAY BRIDGE ROUTINE INSPECTION	
NOTES BY: LICHTENSTEIN CONSULTING ENGINEERS	
JOB #1986	DATE: 4-9-01
CREW: EL, SD, SP	SHEET 9 OF 9

65
199

(14) CATWALK GRATING SECTION CUT TOO LONG, STICKS UP ≈4" AGAINST FB BOT FL

➤ (AD) BTWN LAT. BRACING TOP FL & CATWALK RAILING @ LOCATIONS THROUGHOUT BRIDGE

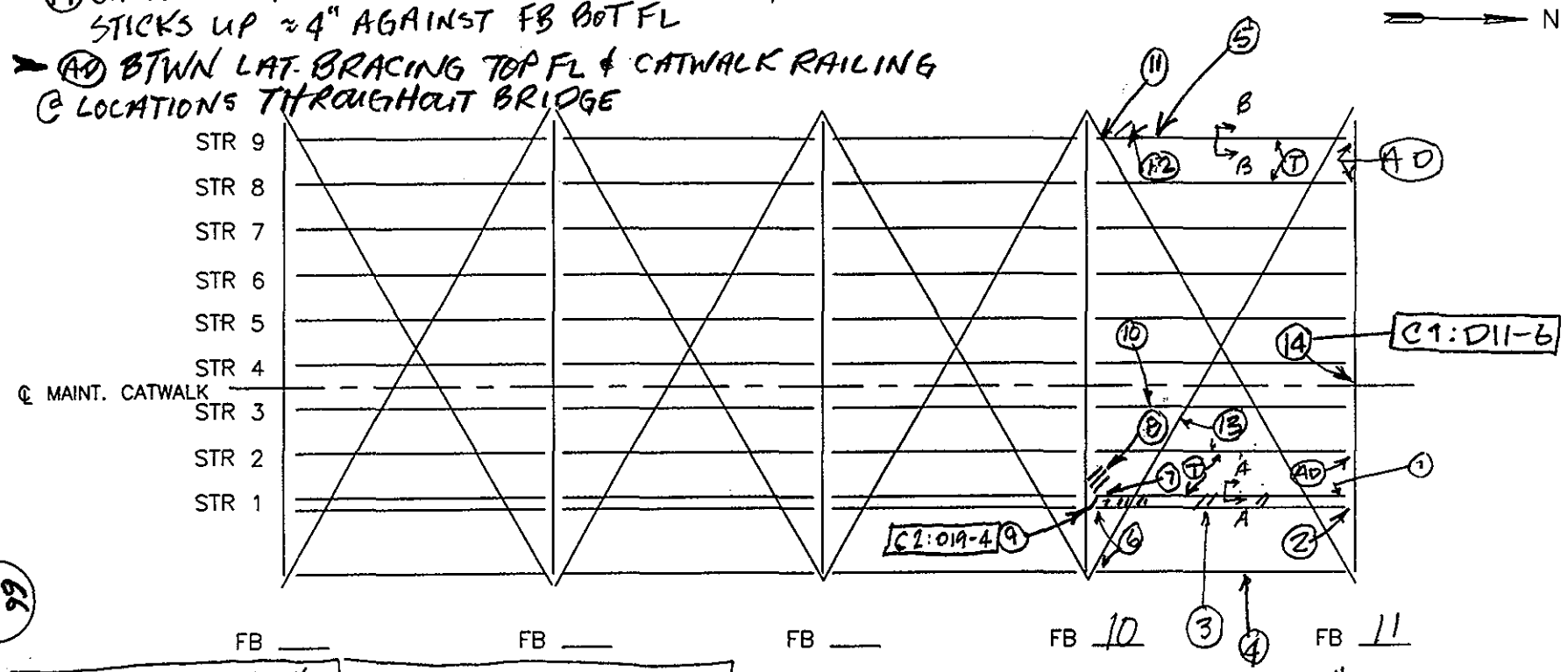

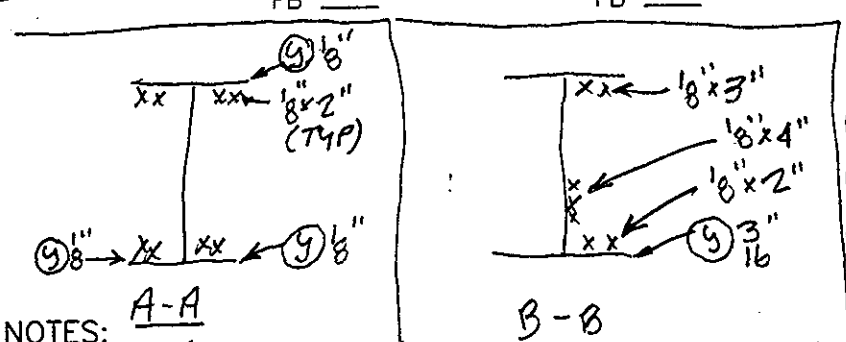

(8) 100% LOSS OF DECK PAN 1'x2'

(9) " " " " 4' LONG

(10) 2-4"x5"x3/8" PL'S WELDED TO W/S BOT FL

(11) 1/16"x F.H. PITTING ON E&W WEB

(12) SIM (8), 15' LONG

(13) 1/2"Ø CORROSION HOLE IN W. BOT FL

SPAN 1

NOTES:

(1) 1/8"x1" PITTING ON W. WEB

(2) 1/8"x2" PITTING ON WEB ~

(3) DECK PAN w/ HVY RUST ~ 10' LONG

(4) 1/8"x2" PITTING ON W/S OF TOP & BOT FL

(5) 1/2"x12"x≈10' COV. PL WELDED TO BOT FL w/ 1/4" IR BTWN PL & BOT FL @ N. END

(6) 1/8"x1" PITTING ON WEB

(7) " " " " (E&W) & UP TO 1" (IR) BTWN STR BRG PL'S C2:D19-3

FLOOR SYSTEM	EL
DEPARTMENT OF THE ARMY NEW ENGLAND DISTRICT CORPS OF ENGINEERS	
SAGAMORE HIGHWAY BRIDGE ROUTINE INSPECTION	
NOTES BY: LICHTENSTEIN CONSULTING ENGINEERS	
JOB #1986	DATE: 4.9.01
CREW: EL, SD, SP	SHEET 8 OF 9

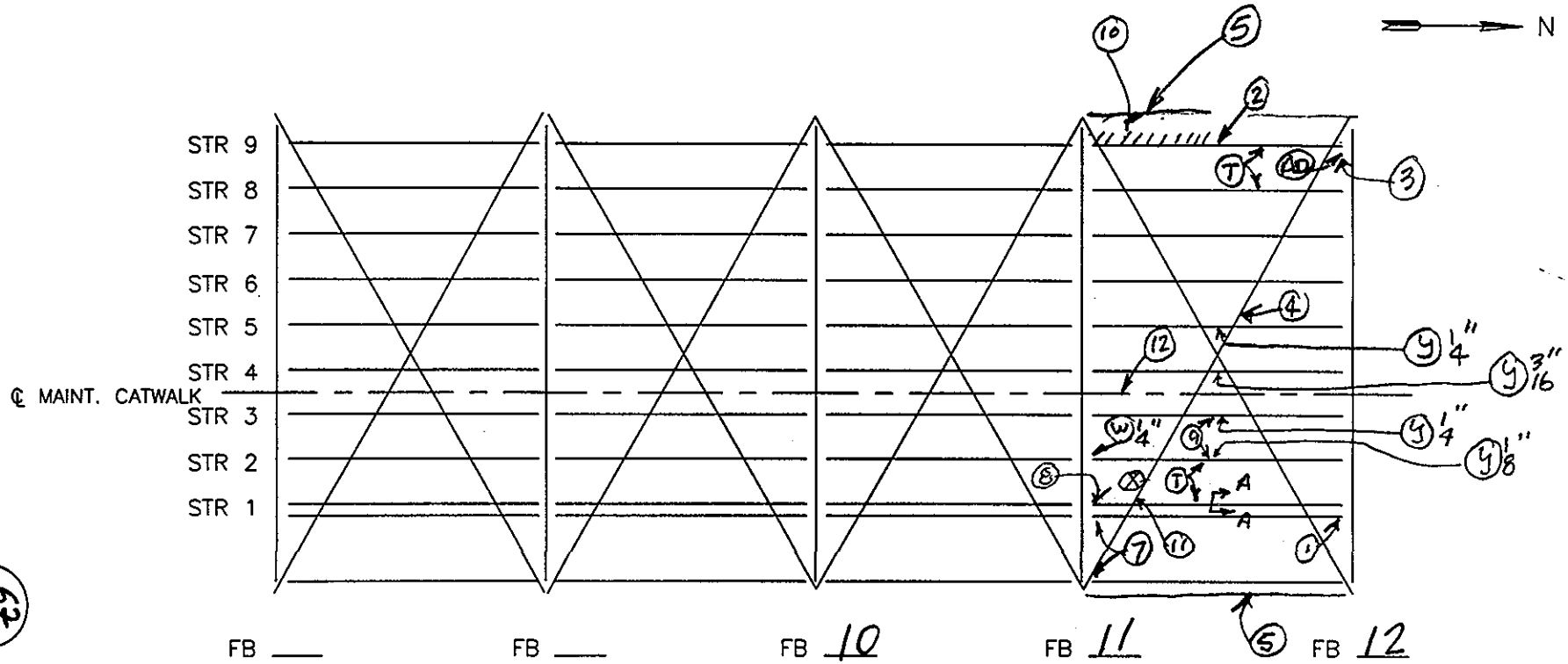

⊗- DOWNSPOUT w/ AREA OF PINHOLES IN DECK PAN

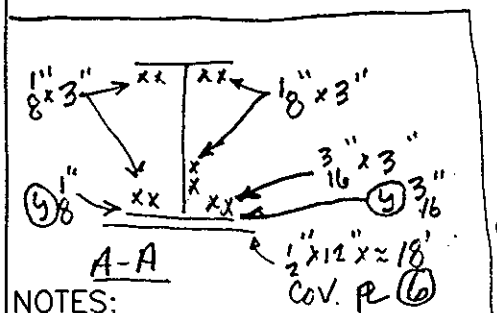

(9) 1/8"x1"Ø PITTING ON W/S OF BOT FL.
(10) 100% LOSS IN DECK PAN x 4" WIDE ALONG STR. FL.
(11) 1/2"x1" CORROSION HOLE IN W. TOP FL OF LAT. BRACING
(12) MULTIPLE CORROSION HOLES IN CATWALK GRATING SUPPORT

SPAN 1

NOTES:

(1) 1/8"x3" PITTING ON E. WEB
(2) 1/16"x3" " W/S E & W TOP FL
(3) 1/8"x2" " ON TOP OF E. WEB
(4) 2- CORROSION HOLES, EACH 1/2"x1" IN E. BOT. FL &
(5) 1/8"x6"Ø PITTING ON WIND CHORD, MULTIPLE LOCATIONS
(6) COV. PL WELDED TO BOT FL.
(7) 1/8"x6" PITTING ON WEB [C2:D19-1h] INT ; [C2:D19-2] ~EXT.
(8) 3/16"x1" " " "

FLOOR SYSTEM EL	
DEPARTMENT OF THE ARMY NEW ENGLAND DISTRICT CORPS OF ENGINEERS	
SAGAMORE HIGHWAY BRIDGE ROUTINE INSPECTION	
NOTES BY: LICHTENSTEIN CONSULTING ENGINEERS	
JOB #1986	DATE: 4-9-01
CREW: EL, SD, SP	SHEET 1 OF 9

67
199

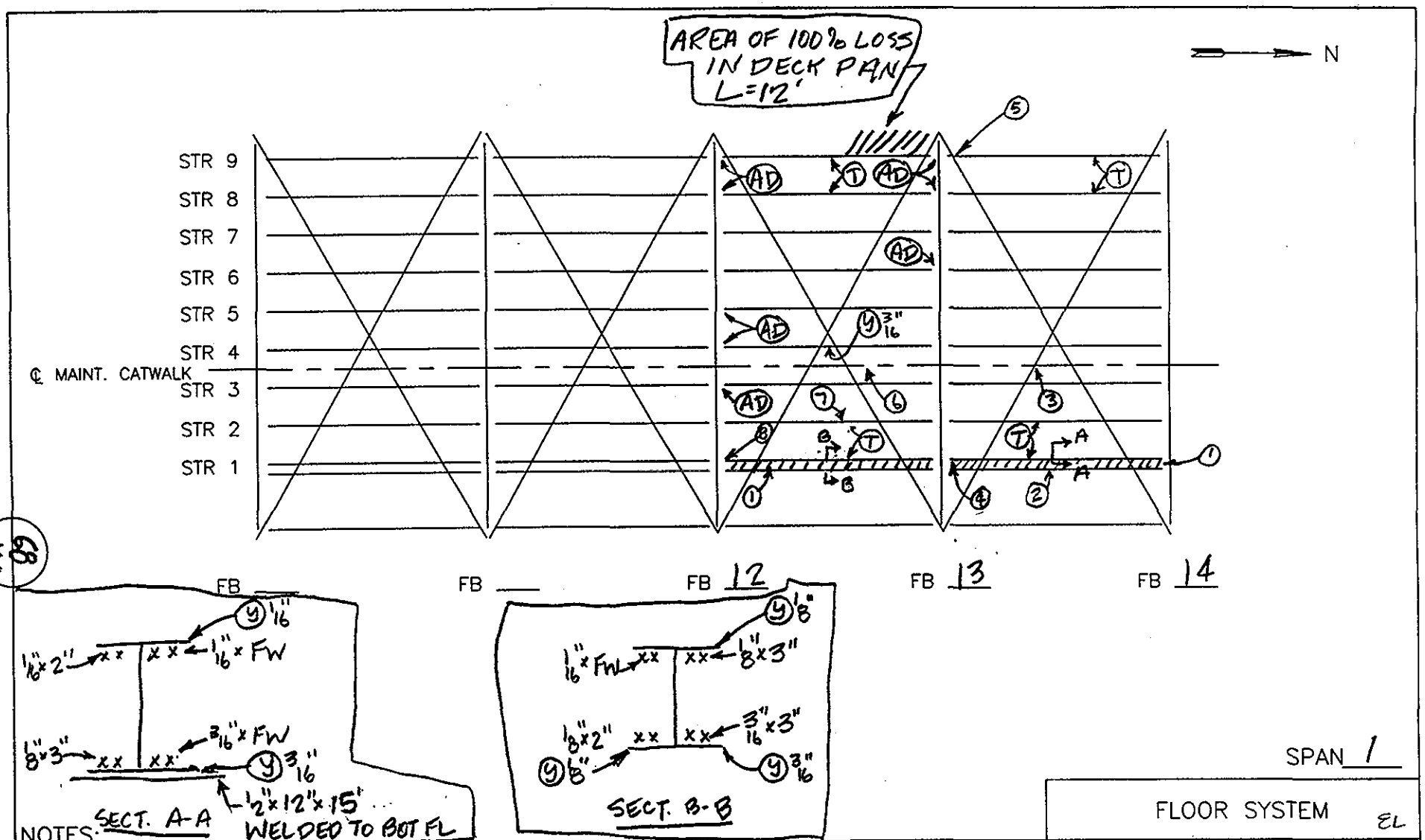

NOTES:

1. AREA OF HVY RUST ON DECK PAN, FULL LENGTH BTWN FLBM 13 & 14
2. 1/8" x FW PITTING ON U/S OF BOT FL
3. 1" Ø CORROSION HOLE IN CATWALK GRATING SUPPORT & (E. SIDE)
4. 3/16" x 2" PITTING @ BOT E. WEB + 1/8" x 2" PITTING @ TOP E. WEB + 1/8" x 1" PITTING @ BOT W. WEB
5. 1/16" x F.H. PITTING ON WEB, E & W SIDES
6. LOOSE SECTION OF GRATING, STICKS UP 1".
7. E. BOT FL (y) 1/8" + 1/16" x 2" PITTING ON U/S OF BOT FL
8. 1/8" x 1" PITTING @ TOP & BOT. OF E. WEB

FLOOR SYSTEM EL

DEPARTMENT OF THE ARMY
NEW ENGLAND DISTRICT CORPS OF ENGINEERS

SAGAMORE HIGHWAY BRIDGE
ROUTINE INSPECTION

NOTES BY: LICHTENSTEIN
CONSULTING ENGINEERS

JOB #1986	DATE: 4.6.01
CREW: EL, SD, SP	SHEET 6 OF 9

WIND CHORD - AREAS OF PITTING UP TO 1/8"x8" Ø, E&W.

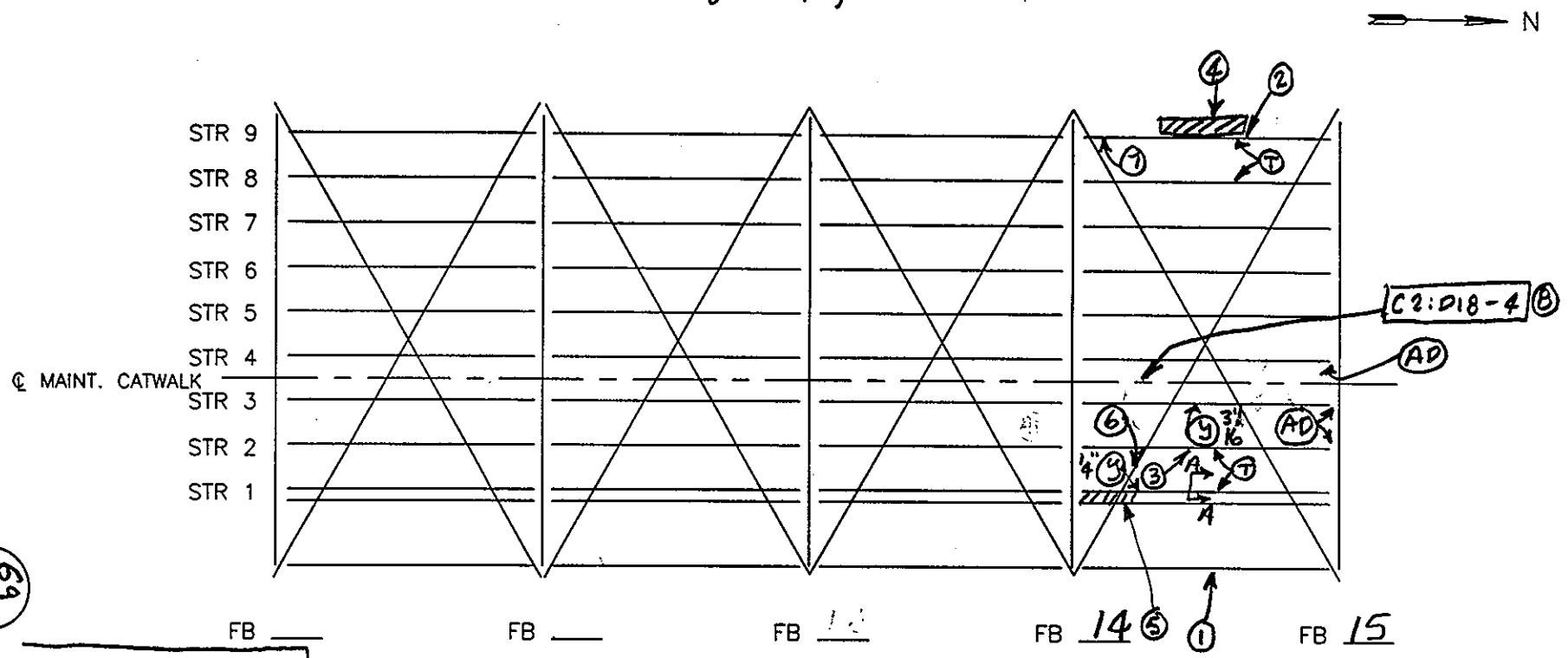

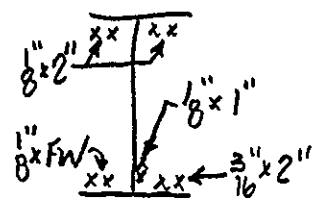

SECT. A-A

NOTES:

1. 1/16"x2" PITTING ON U/S OF BOT FL + 100% LOSS x 1/2" ↕ OF EXT. COV. PL
2. 1/8"x FW " ON U/S OF E&W TOP FL
3. 1/8"x6" PITTING ON U/S OF BOT FL.
4. AREA OF 100% SECTION LOSS IN DECK PAN, 20' LONG
5. " " HVY RUST IN DECK PAN, 10' LONG
6. 1"x3" CORROSION HOLE IN LAT. BRACE S. BOT FL
7. COND (4) 1/8" FOR 12' LENGTH BEGINNING @ FB 14
8. CORROSION HOLES IN CATWALK GRATING SUPPORT FILL PL

SPAN 1

FLOOR SYSTEM EL

DEPARTMENT OF THE ARMY
NEW ENGLAND DISTRICT CORPS OF ENGINEERS

SAGAMORE HIGHWAY BRIDGE
ROUTINE INSPECTION

NOTES BY: LICHTENSTEIN
CONSULTING ENGINEERS

JOB #1986 | DATE: 4.6.01
CREW: EL, SD, SP | SHEET 2 OF 9

69
199

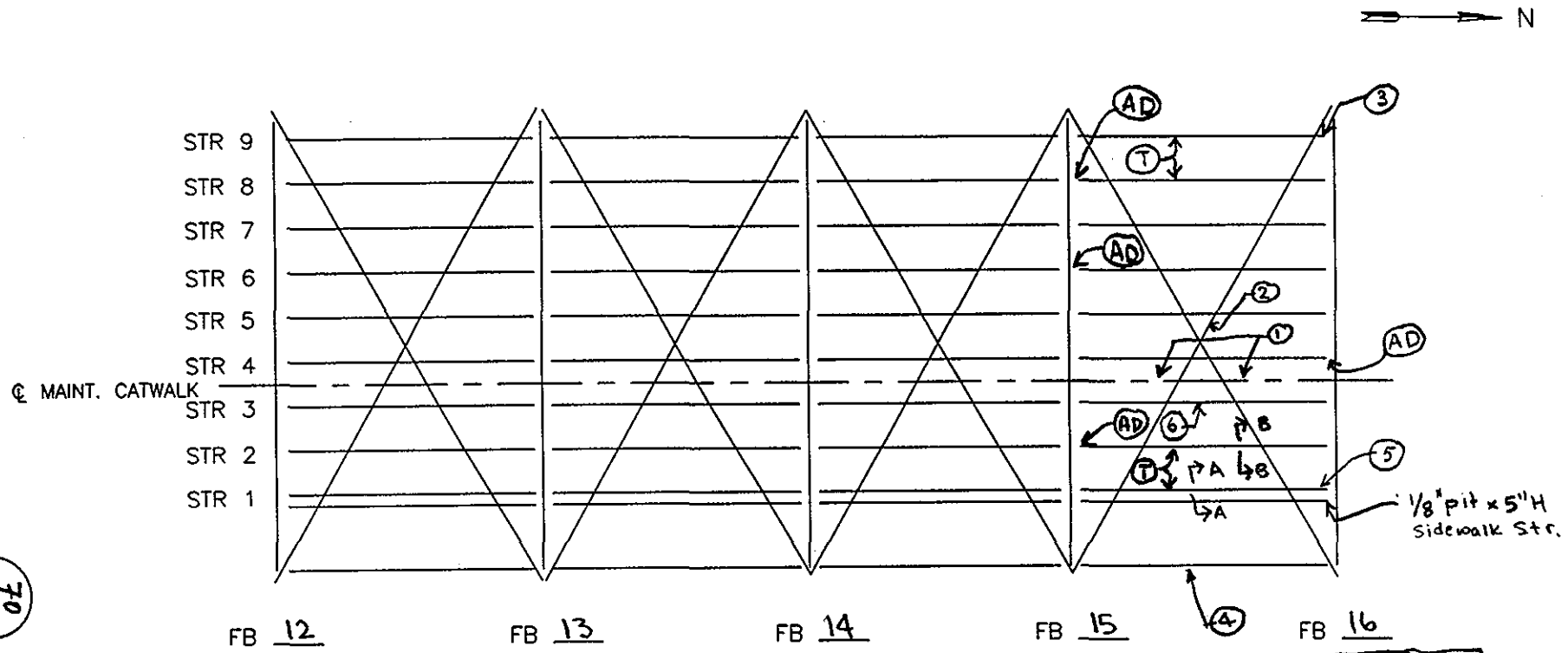

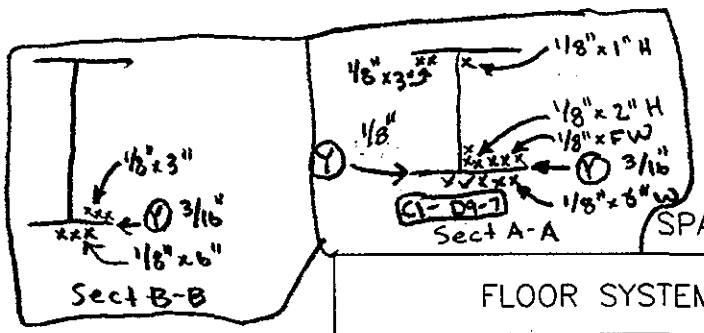

SPAN 1

NOTES:
1. Loose catwalk Grating
2. 2-1/2" ϕ Corrosion Holes in Top ∡ of Lateral Brace
3. 1/8" x 2" H on west Web ≈ 10' from FB16 (Pitting)
4. 1/8" pit x 3" w on u/s bot FL w/ 100% Loss of thickness of PL x 1/2" H that is bolted to web
5. 1/8" pit x 1" H @ base of E & W Web str. 1
6. 1/4" pit x 1" ϕ on u/s of bot FL & Y 3/16" E bot FL & 3/16" x 2" pitting on top of E. bot FL

FLOOR SYSTEM EL

DEPARTMENT OF THE ARMY
NEW ENGLAND DISTRICT CORPS OF ENGINEERS

SAGAMORE HIGHWAY BRIDGE
ROUTINE INSPECTION

NOTES BY: LICHTENSTEIN
CONSULTING ENGINEERS

JOB #1986 | DATE: 4/5/01
CREW: SD, EL, SP | SHEET 4 OF 6

70
133

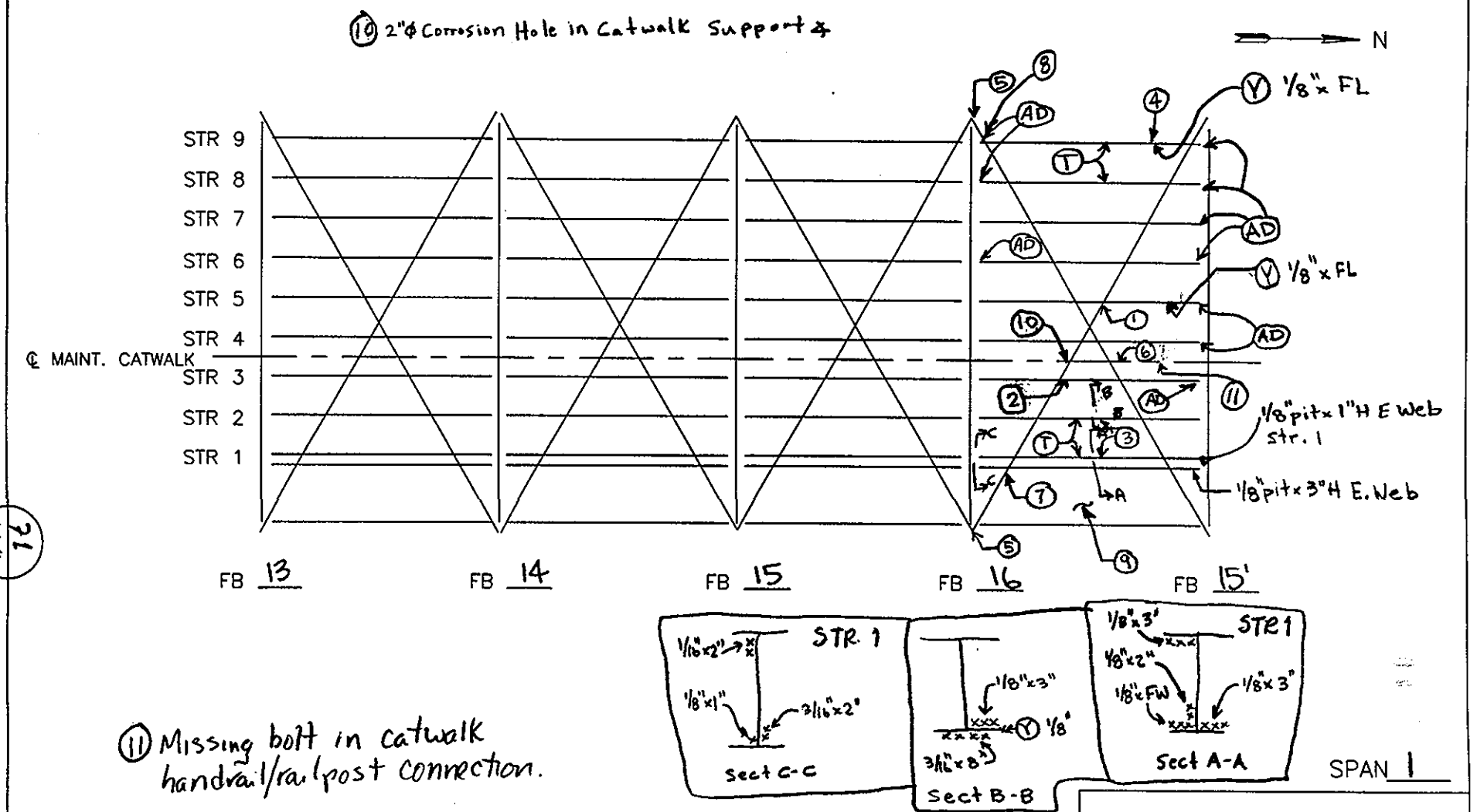

(11) Missing bolt in catwalk handrail/railpost connection.

NOTES:
1. 2-1/2"ϕ holes in Top FL ∡ of Lateral bracing C2-D11-6
2. 1/8" pit x FW on Top of East bot FL & (Y) 3/16" @ midspan & 1/8" x 2" pit u/s bot FL
3. 1/8" pit x 3"w on u/s west Top FL & Top of East bot FL @ midspan
4. 1/8" pit x 2"H @ base of E&W web ≈ 10' from FB15'
5. Nav. Lights Working
6. Loose Piece of catwalk Grating (Tripping Hazard)
7. 1"ϕ Corrosion Hole in top ∡ of Lateral brace.
8. 1/16" pit x 6"H @ Top of West Web & 1/16" pit x 10"H on E. Web @ Top
9. Missing Sections of Sheathing on utility Conduits

FLOOR SYSTEM	EL
DEPARTMENT OF THE ARMY NEW ENGLAND DISTRICT CORPS OF ENGINEERS	
SAGAMORE HIGHWAY BRIDGE ROUTINE INSPECTION	
NOTES BY: LICHTENSTEIN CONSULTING ENGINEERS	
JOB #1986	DATE: 4/5/01
CREW: SD, SP, EL	SHEET 1 OF 6

21
109

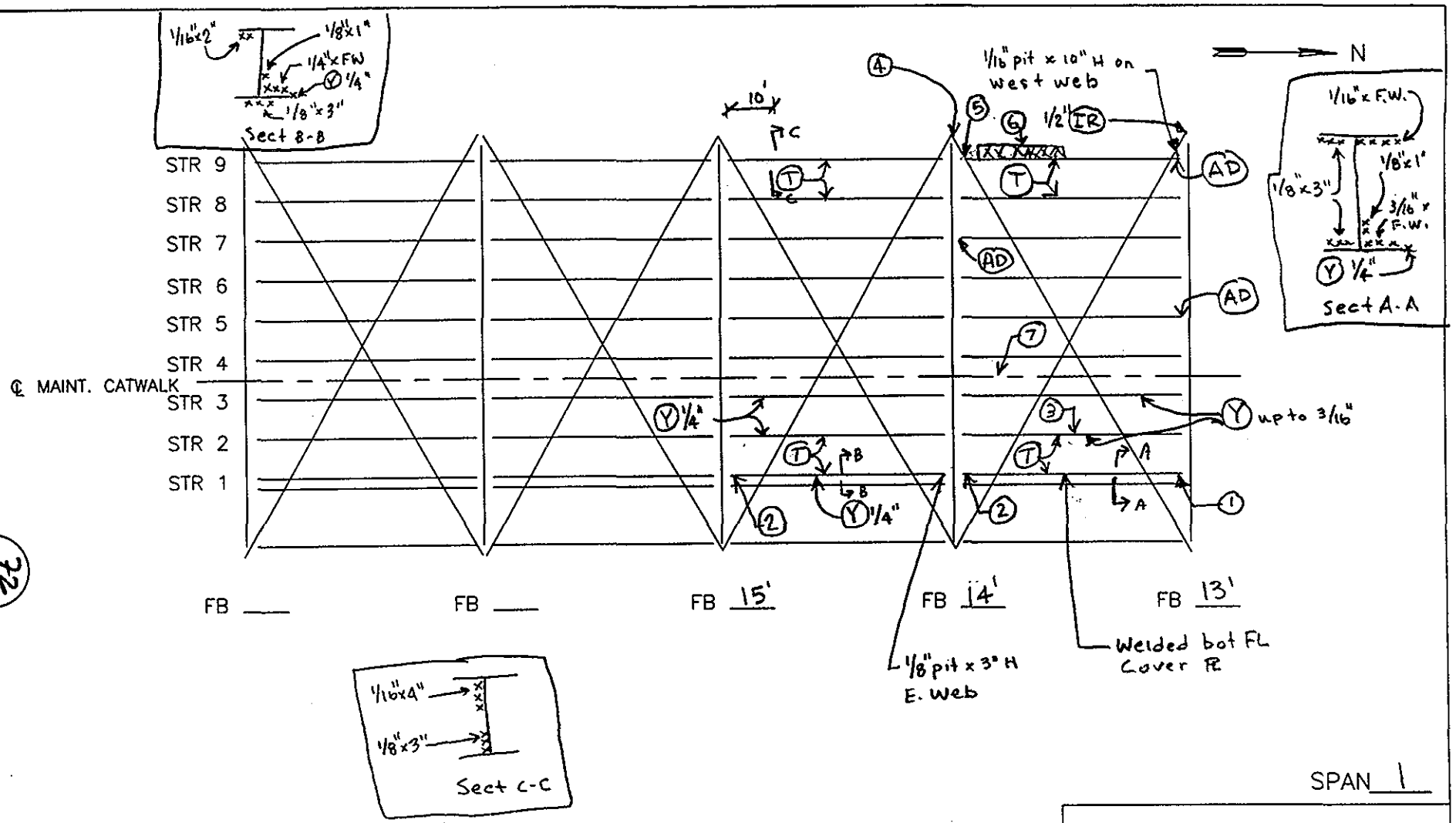

SPAN 1

NOTES:
1. 3/16" pit x 4" H on E web
2. 1/8" pit x 1" H @ base of web + 1/8" pit x 3" H @ Top of web (E. Side)
3. 1/4" pit x 3" w on E side of bot. of bot FL.
4. 14 Rivets w/ 40% SL @ Lateral Brac. Conn to FB.
5. 1/16" pitt. on all surfaces @ conn. to FB (E & W)
6. Deck Pan: 20'L Section w/ 100% S.L.
7. Grating Hold down Clip missing E & W. Sides

FLOOR SYSTEM	EL
DEPARTMENT OF THE ARMY NEW ENGLAND DISTRICT CORPS OF ENGINEERS	
SAGAMORE HIGHWAY BRIDGE ROUTINE INSPECTION	
NOTES BY: LICHTENSTEIN CONSULTING ENGINEERS	
JOB #1986	DATE: 4/4/01
CREW: SD, SP	SHEET 4 OF 8

22
199

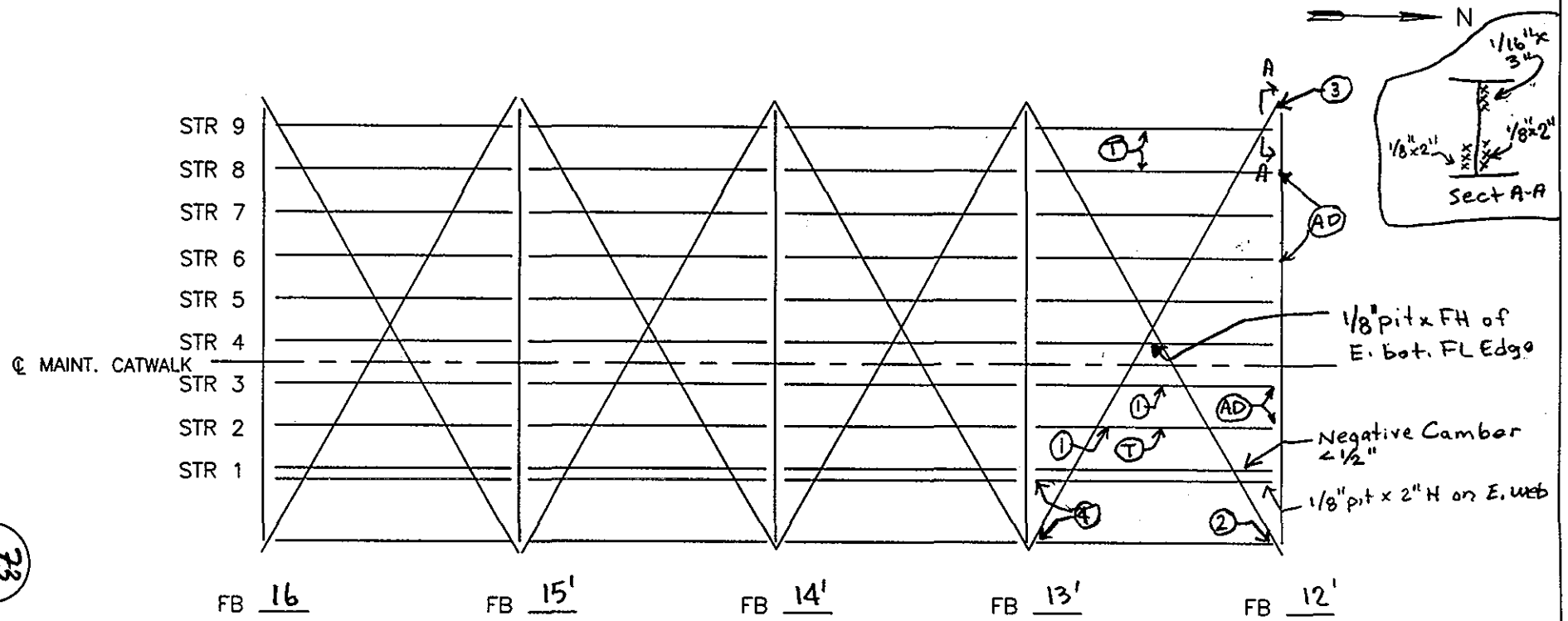

SPAN 1

NOTES:
1. 3/16" pit ~ FH of edge of bott. FL (C1-D8-3)
2. 1/8" x 3" H on West Web of sidewalk str. (pitting)
3. 3/4" (1R) btwn Top Gusset R & Lat. Bracing 4's
4. 1/8" x 1" H pitting on web

FLOOR SYSTEM EL	
DEPARTMENT OF THE ARMY NEW ENGLAND DISTRICT CORPS OF ENGINEERS	
SAGAMORE HIGHWAY BRIDGE ROUTINE INSPECTION	
NOTES BY: LICHTENSTEIN CONSULTING ENGINEERS	
JOB #1986	DATE: 4/4/01
CREW: SD, SP, EL	SHEET 6 OF 9

Typ. Cond. 1/8" pit x up to 8" ϕ on wind chord bracing

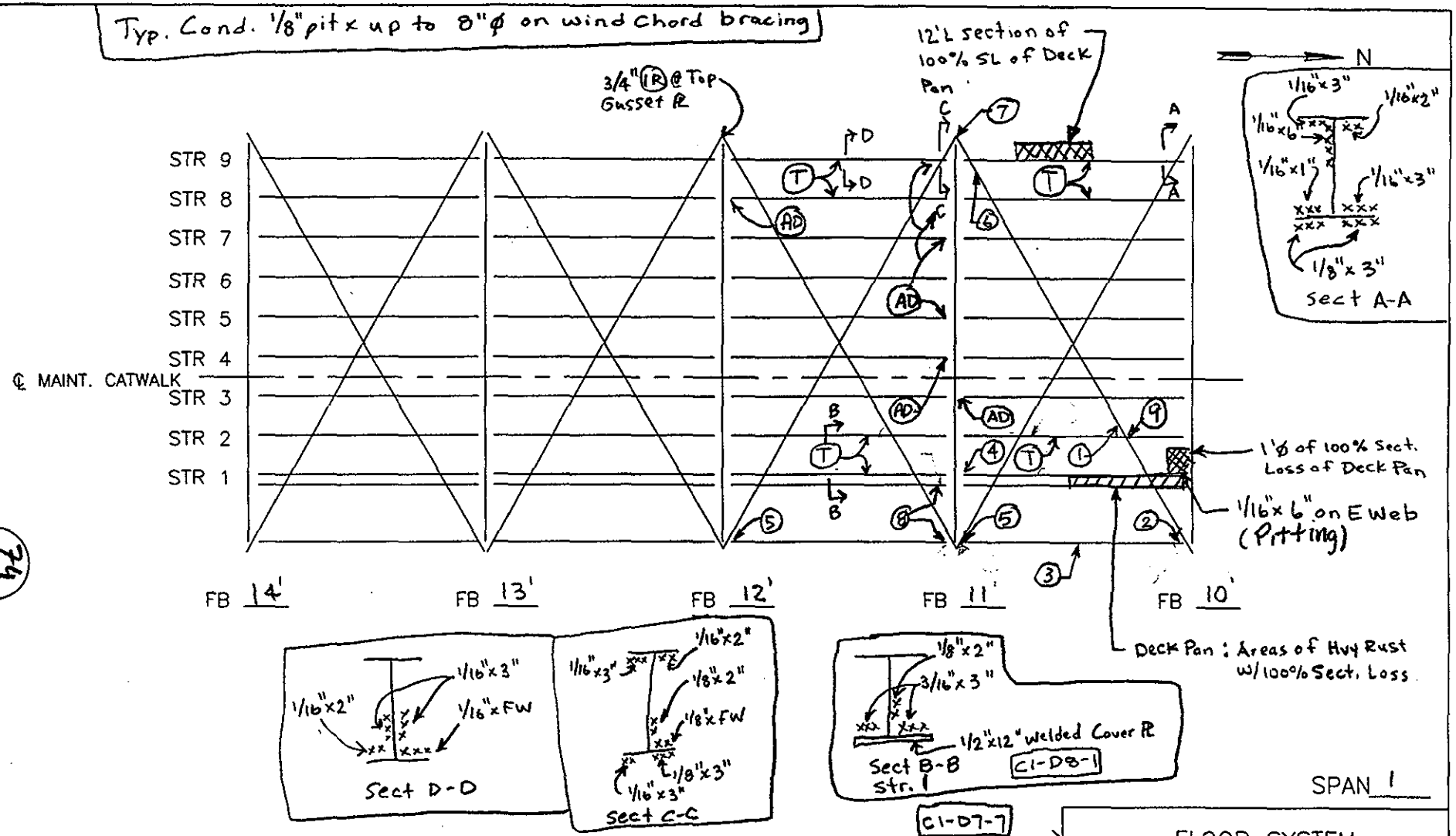

SPAN 1

NOTES:
1. up to 1" (IR) btwn. repair PL & Top & Bott. FL ∡'s w/areas of pitting (3/16" x 4")
2. 1/8" pit. x 4" on West Web of sidewalk str.
3. 1/8" pit x FW of u/s of Top FL of sidewalk Str.
4. 1" x 1/4" dp Gouge in str. 1 Cope C1-D7-8 (East Web)
5. 1/8" x 7" on West Web of Sidewalk Str. (PITTING)
6. 3/4" ϕ Corrosion Hole in Lat. Brac. bot FL ∡ C2-D10-4
7. 3 Rivet heads w/ 90% S.L. on horiz. Leg of Conn. ∡ for Later. Bracing to FB Web
8. 1/8" pit x 1" H on Web
9. 2 PL's 4" x 3" x 1/2" welded to top of bot FL of str. 2

FLOOR SYSTEM EL

DEPARTMENT OF THE ARMY
NEW ENGLAND DISTRICT CORPS OF ENGINEERS

SAGAMORE HIGHWAY BRIDGE
ROUTINE INSPECTION

NOTES BY: LICHTENSTEIN
CONSULTING ENGINEERS

JOB #1986 | DATE: 4/4/01
CREW: SD, SP, EL | SHEET 1 OF 9

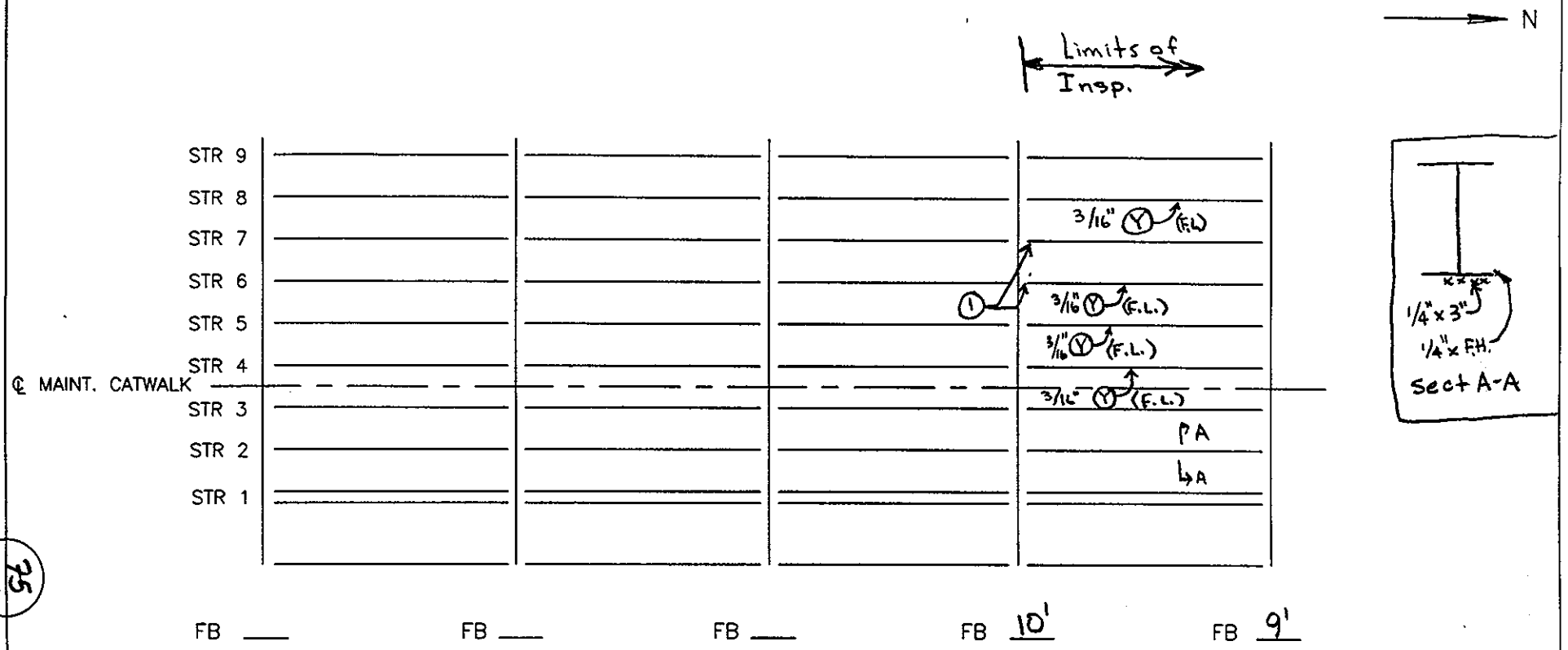

SPAN 1

NOTES: 1 1/8" pit x 3" H @ base of E. Web

FLOOR SYSTEM	EL
DEPARTMENT OF THE ARMY NEW ENGLAND DISTRICT CORPS OF ENGINEERS	
SAGAMORE HIGHWAY BRIDGE ROUTINE INSPECTION	
NOTES BY: LICHTENSTEIN CONSULTING ENGINEERS	
JOB #1986	DATE: 4/4/01
CREW: SD, SP	SHEET 1 OF 8

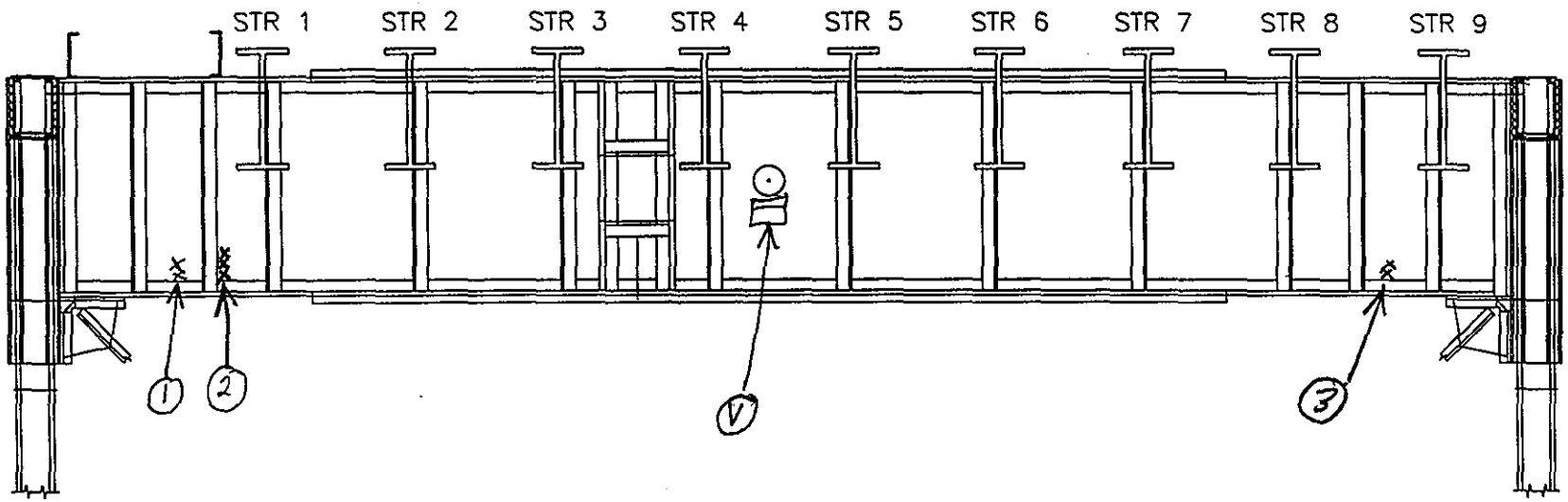

SPAN 1

FLOORBEAM 9 N ELEV.

NOTES: (1) 1/8"x2"H pit on web
(2) 1/8"x3"H pit on web
(3) 1/8"x1"H pit on web

FLOORBEAM ELEVATION EL

DEPARTMENT OF THE ARMY
NEW ENGLAND DISTRICT CORPS OF ENGINEERS

SAGAMORE HIGHWAY BRIDGE
ROUTINE INSPECTION

NOTES BY: LICHTENSTEIN
CONSULTING ENGINEERS

JOB #1986 DATE: 4/9/01

CREW: SBEL,SD SHEET 7 OF 9

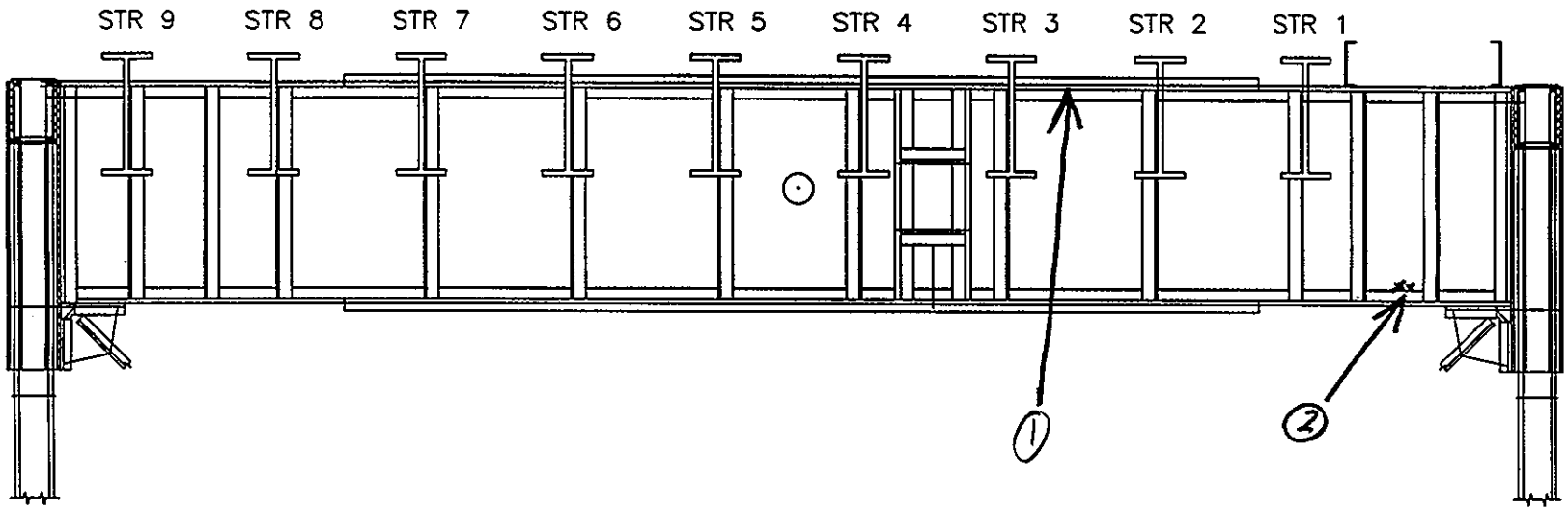

77
193

SPAN 1

FLOORBEAM 10 S ELEV.

NOTES: (1) Blank holes in top FL matching bot cov PL fastener pattern.
(2) 1/8"x1" H pit on web

FLOORBEAM ELEVATION EL

DEPARTMENT OF THE ARMY
NEW ENGLAND DISTRICT CORPS OF ENGINEERS

SAGAMORE HIGHWAY BRIDGE
ROUTINE INSPECTION

NOTES BY: LICHTENSTEIN
CONSULTING ENGINEERS

JOB #1986 DATE: 4/9/01

CREW: SP, EL, SD SHEET 6 OF 9

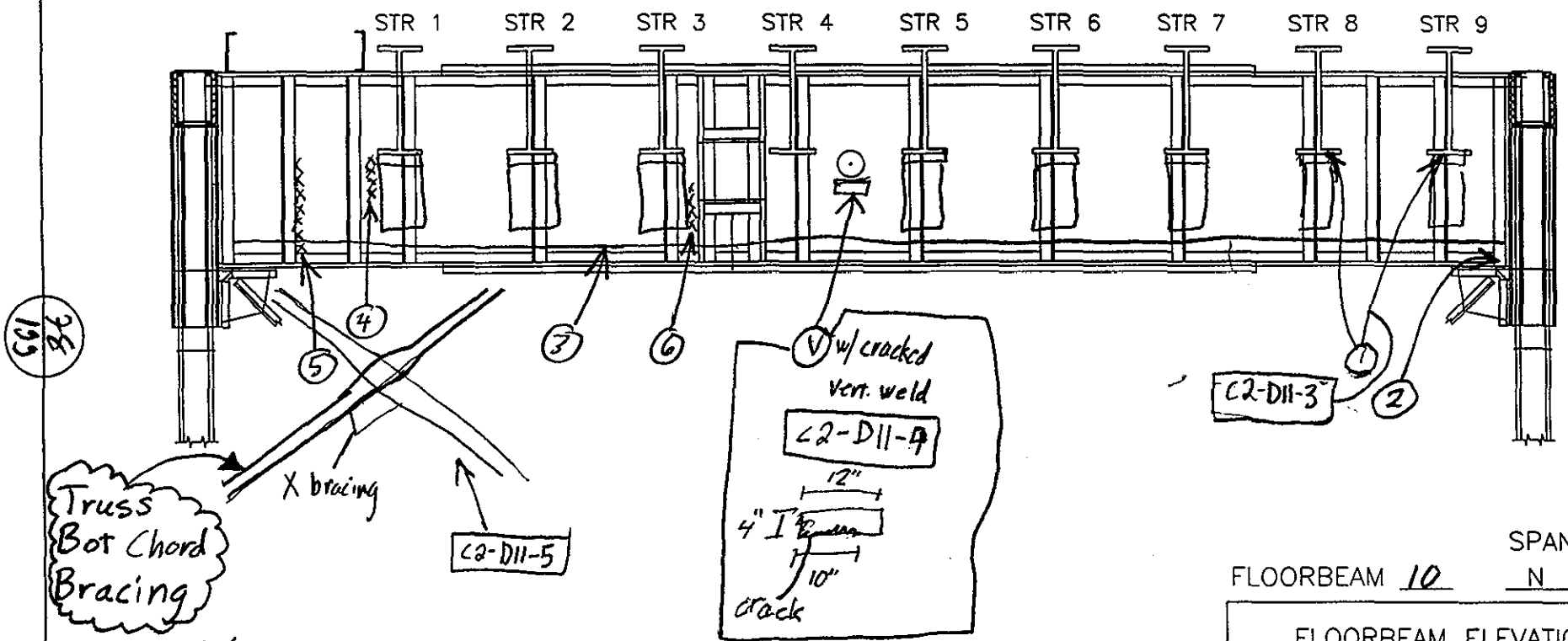

SPAN 1

FLOORBEAM 10 N ELEV.

NOTES:
1. 1/2" IR bet bearing Pls
2. Hvy rust w/ 50% section loss to rivet heads
3. Remaining 1/2" of welded PP to FB web, F.L.
4. 1/8"x8" pit on web
5. 1/16"x1 1/4" pit on web
6. 1/16"x6" H pit on web

FLOORBEAM ELEVATION EL

DEPARTMENT OF THE ARMY
NEW ENGLAND DISTRICT CORPS OF ENGINEERS

SAGAMORE HIGHWAY BRIDGE
ROUTINE INSPECTION

NOTES BY: LICHTENSTEIN
CONSULTING ENGINEERS

JOB #1986 | DATE: 4/9/01

CREW: SP, EL, SD | SHEET 5 OF 9

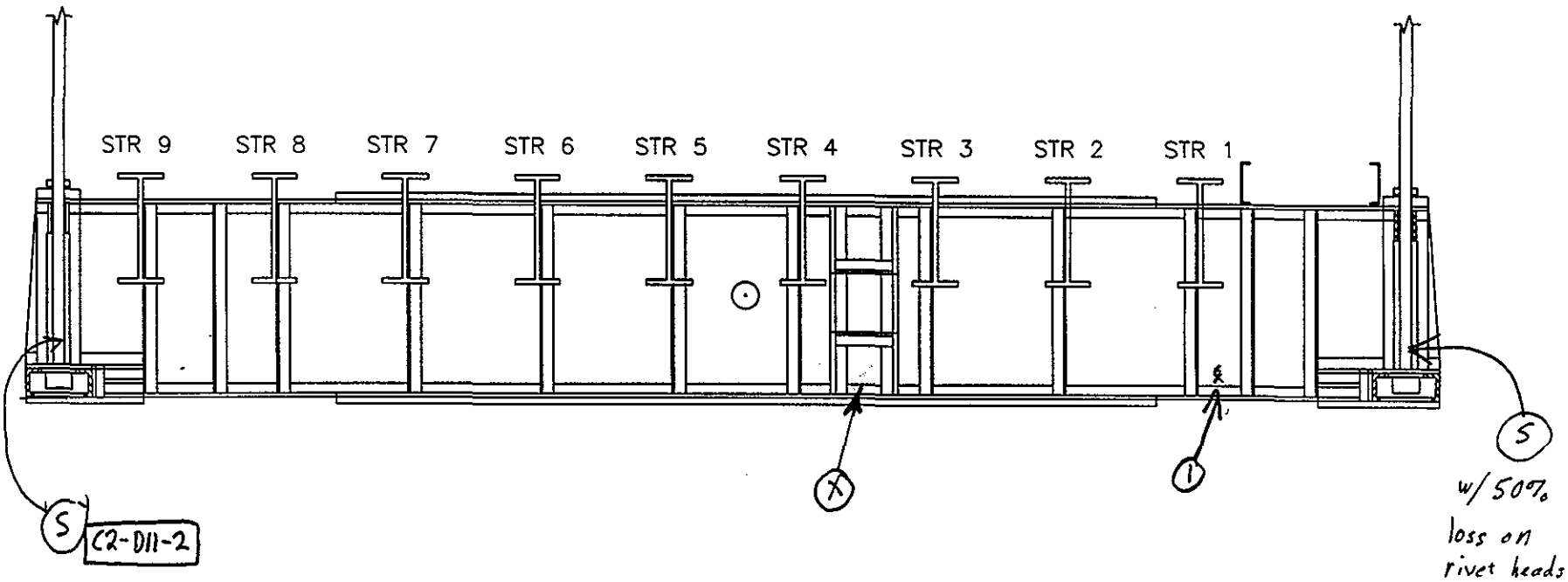

SPAN 1

FLOORBEAM 11 S ELEV.

NOTES: (1) 1/8" x 1" H pit on web

FLOORBEAM ELEVATION EL

DEPARTMENT OF THE ARMY
NEW ENGLAND DISTRICT CORPS OF ENGINEERS

SAGAMORE HIGHWAY BRIDGE
ROUTINE INSPECTION

NOTES BY: LICHTENSTEIN
CONSULTING ENGINEERS

JOB #1986 DATE: 4/9/01

CREW: SP, EL, SD SHEET 4 OF 9

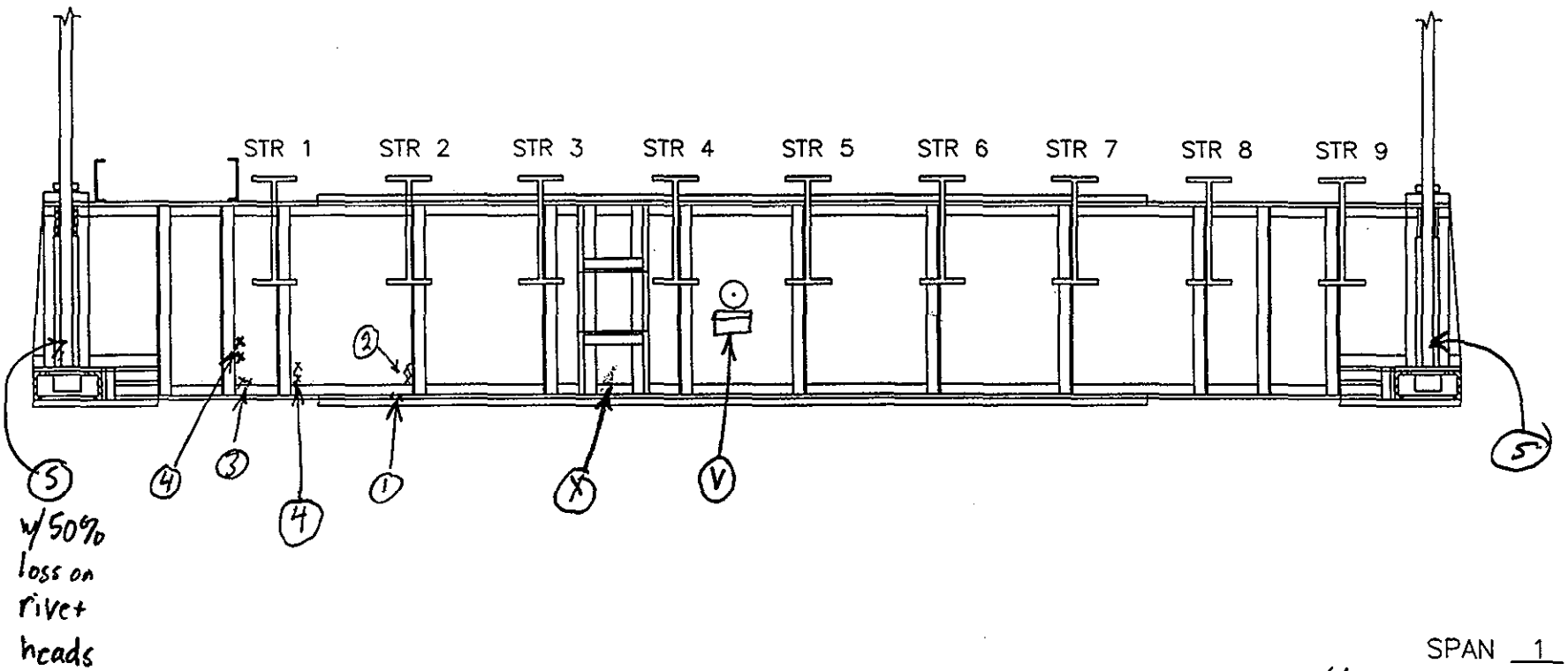

80
199

SPAN 1

FLOORBEAM 11 N ELEV.

NOTES: (1) 1/8"x6" pit on top of bot fl
(2) 1/8"x2"H pit on web
(3) 1/8"x1"H pit on web
(4) " x2"H " " "

FLOORBEAM ELEVATION ℄

DEPARTMENT OF THE ARMY
NEW ENGLAND DISTRICT CORPS OF ENGINEERS

SAGAMORE HIGHWAY BRIDGE
ROUTINE INSPECTION

NOTES BY: LICHTENSTEIN
CONSULTING ENGINEERS

JOB #1986 DATE: 4/9/01

CREW: SP, EL, SD SHEET 3 OF 9

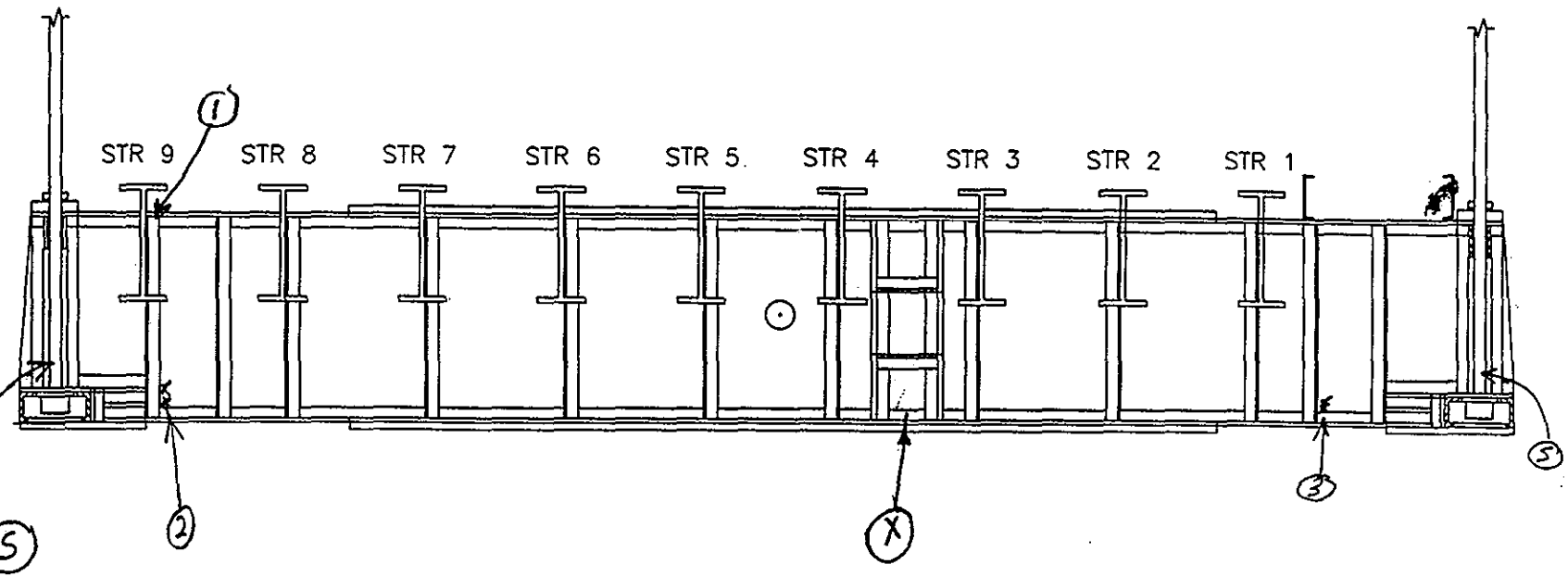

SPAN 1

FLOORBEAM 12 S ELEV.

NOTES: (1) 1/8" x 3" H.pit on u/s of top FL
(2) 1/8" x 1" H.pit on web
(3) " " " " " "

FLOORBEAM ELEVATION EL

DEPARTMENT OF THE ARMY
NEW ENGLAND DISTRICT CORPS OF ENGINEERS

SAGAMORE HIGHWAY BRIDGE
ROUTINE INSPECTION

NOTES BY: LICHTENSTEIN
CONSULTING ENGINEERS

JOB #1986 DATE: 4/9/01

CREW: SP, EL, SD SHEET 2 OF 9

81
199

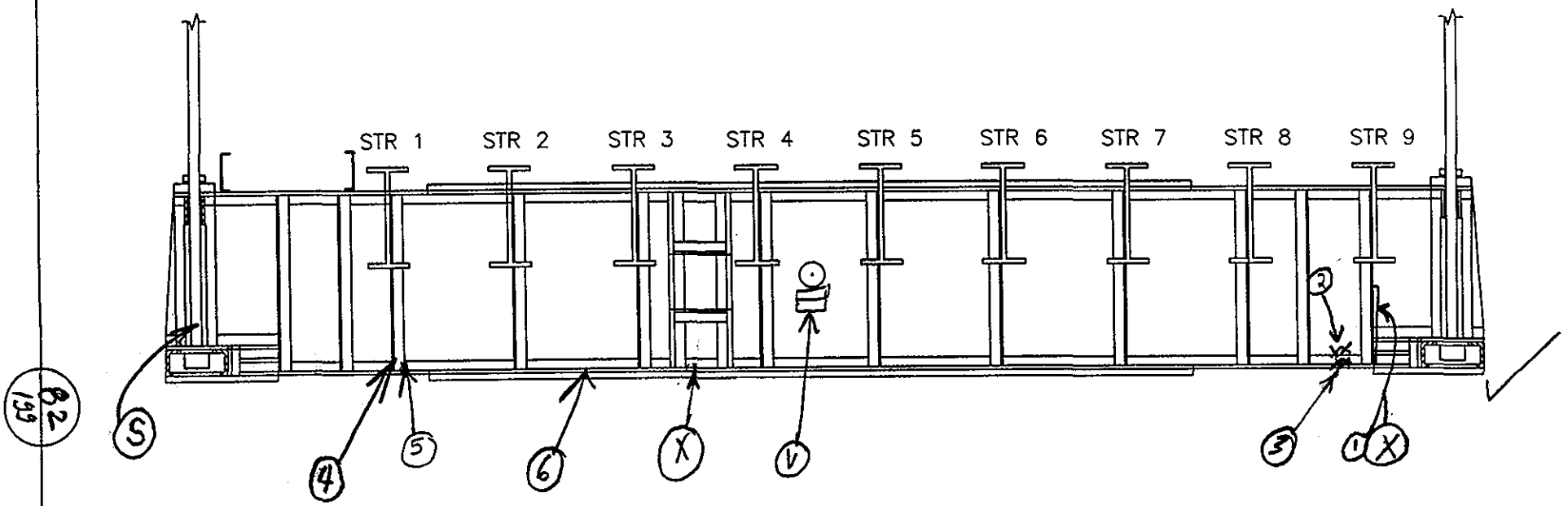

SPAN 1

FLOORBEAM 12 N ELEV.

NOTES:
1. 5"x24" welded PL to stiffener (3" welds)
2. 1/8" pit x 1" H on web of FB
3. 1/8" pit x 2" on top of horiz leg of bot FL ∠ of FB
4. 1/4" x 3/4" corrosion hole at bot of stiffener
5. 1/8" pit x 4" on top horiz leg of bot FL ∠ of FB
6. 1/8" x 3/4" pitting on top of cover PL @ random locations, Full length

FLOORBEAM ELEVATION EL	
DEPARTMENT OF THE ARMY NEW ENGLAND DISTRICT CORPS OF ENGINEERS	
SAGAMORE HIGHWAY BRIDGE ROUTINE INSPECTION	
NOTES BY: LICHTENSTEIN CONSULTING ENGINEERS	
JOB #1986	DATE: 4/6/01
CREW: SP, EL, SD	SHEET 9 OF 9

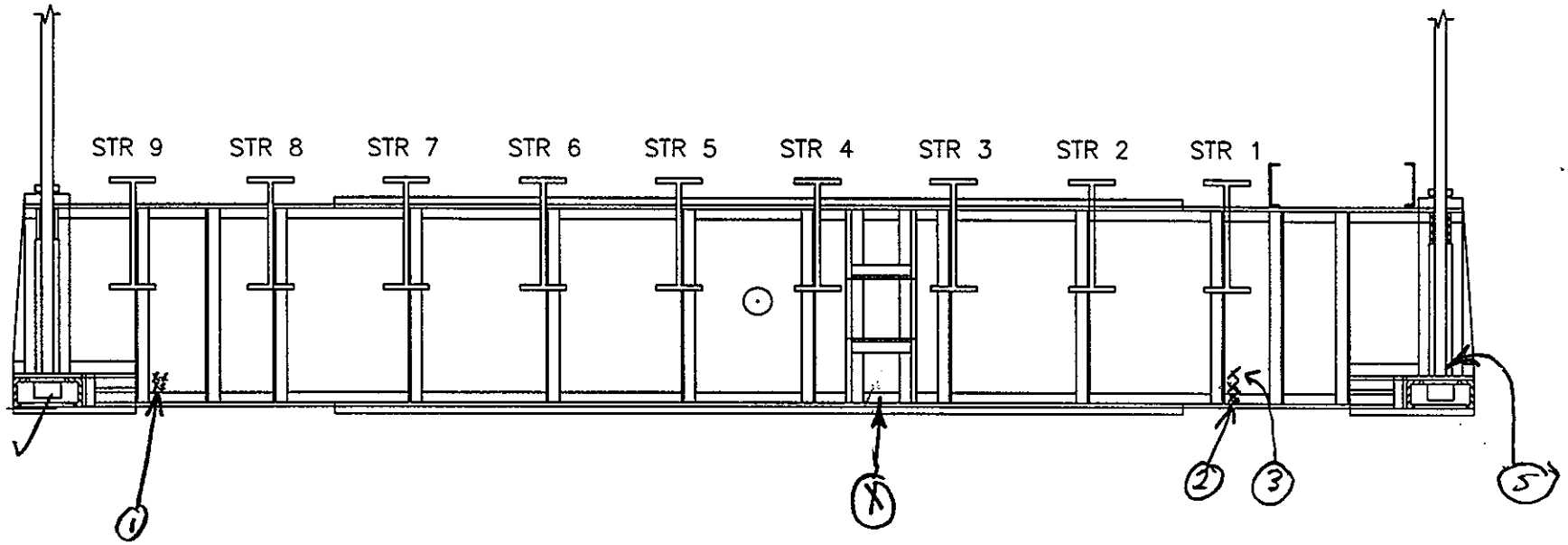

B3 199

SPAN 1

FLOORBEAM 13 S ELEV.

NOTES: (1) 1/8"x3"Wx2"H pit on web of FB
(2) 1/8"x2"H pit on vert leg of bot FL ∡ of FB
(3) 1/8"x1"H pit on web of FB

FLOORBEAM ELEVATION EL

DEPARTMENT OF THE ARMY
NEW ENGLAND DISTRICT CORPS OF ENGINEERS

SAGAMORE HIGHWAY BRIDGE
ROUTINE INSPECTION

NOTES BY: LICHTENSTEIN
CONSULTING ENGINEERS

JOB #1986 DATE: 4/6/01

CREW: SP, EL, SD SHEET 8 OF 9

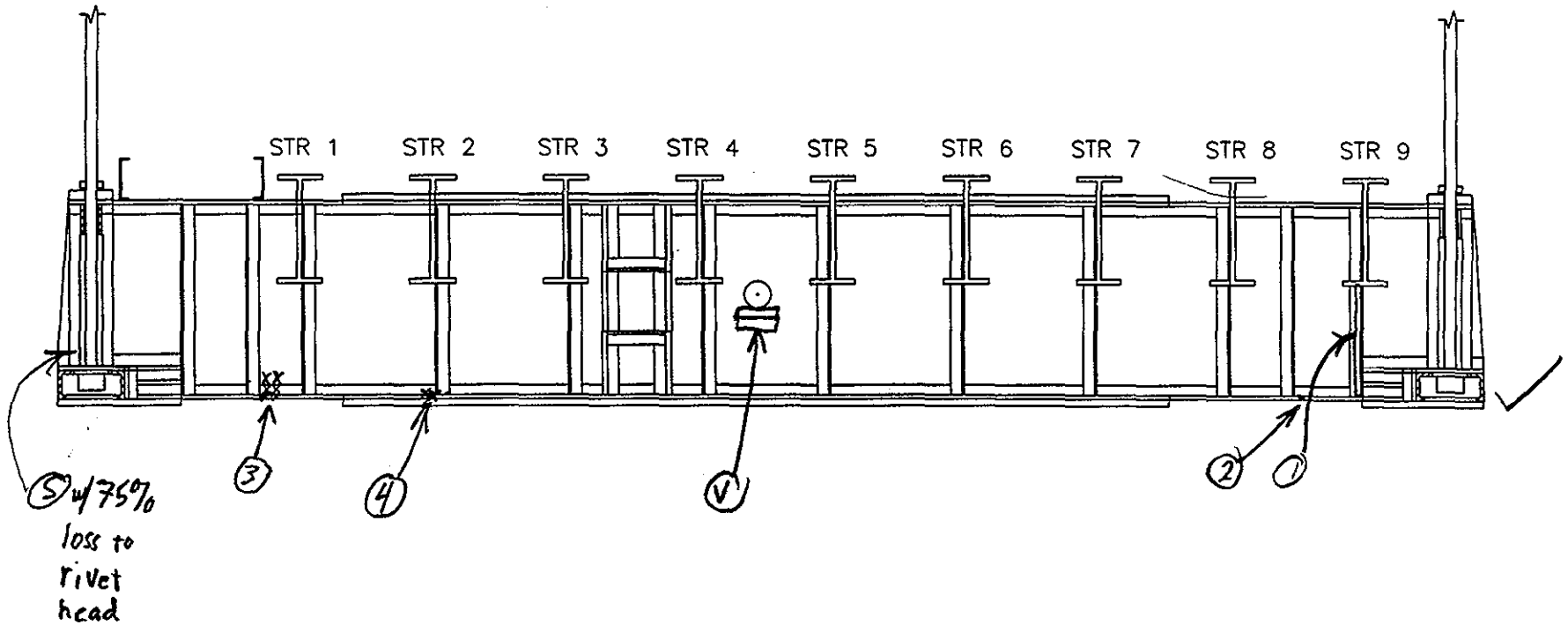

B4 193

SPAN 1

FLOORBEAM 13 N ELEV.

NOTES: (1) 5"x30"H PL welded to stiffener (4" long welds)
(2) 1/8" pit x 3"Φ on top of bot FL
(3) 1/16"x4" pit on top of bot horiz leg of FL & FB, 1/8"x FH pit on bot vert leg of FL & of FB plus 1/8"x2" pit on web of FB
(4) 1/8"x3/4" pit on top of cov PL plus 1/8"x4" on top of bot FL of FB

FLOORBEAM ELEVATION EL

DEPARTMENT OF THE ARMY
NEW ENGLAND DISTRICT CORPS OF ENGINEERS

SAGAMORE HIGHWAY BRIDGE
ROUTINE INSPECTION

NOTES BY: LICHTENSTEIN
CONSULTING ENGINEERS

JOB #1986 | DATE: 4/6/01

CREW: SP, EL, SD | SHEET 7 OF 9

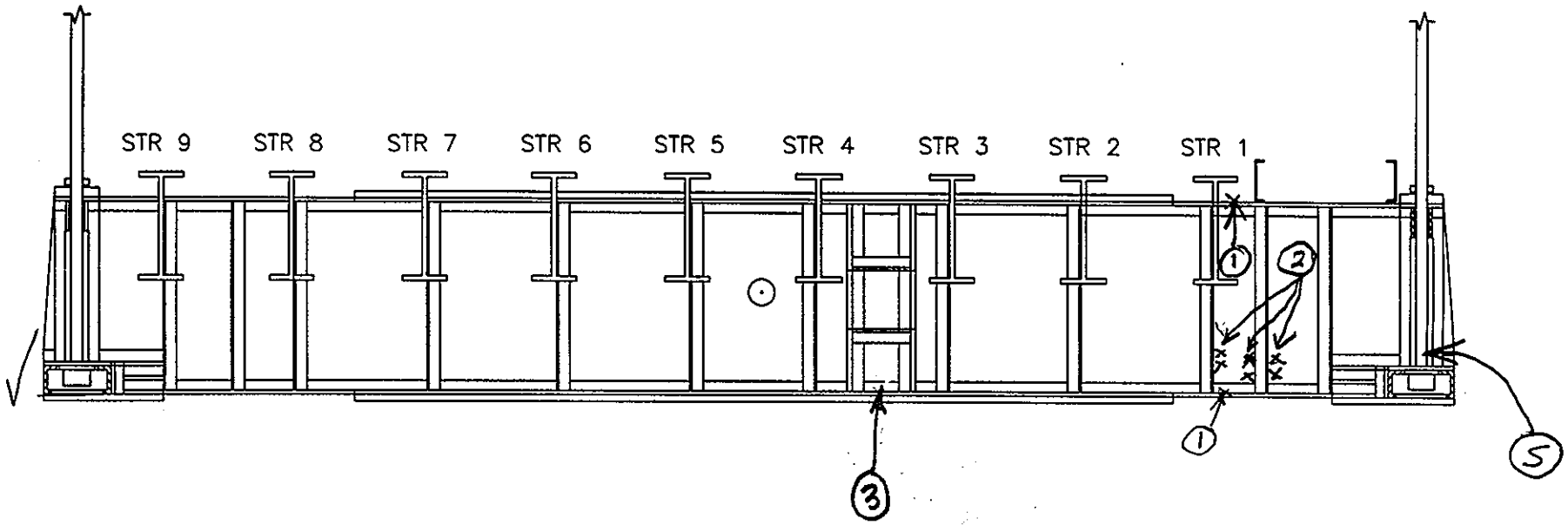

SPAN 1

FLOORBEAM 14 S ELEV.

NOTES: (1) 1/8" x 2" pit on u/s of top FL, and top of bot FL
(2) 1/8" x 2" H pit on web of FB
(3) SIM (2), BUT MOST OF THE PL HAS BEEN REMOVED, LEAVING A LINE OF WELD ON THE FLBM BOT FL &.

FLOORBEAM ELEVATION EL	
DEPARTMENT OF THE ARMY NEW ENGLAND DISTRICT CORPS OF ENGINEERS	
SAGAMORE HIGHWAY BRIDGE ROUTINE INSPECTION	
NOTES BY: LICHTENSTEIN CONSULTING ENGINEERS	
JOB #1986	DATE: 4·6·01
CREW: SP, EL, SD	SHEET 5 OF 9

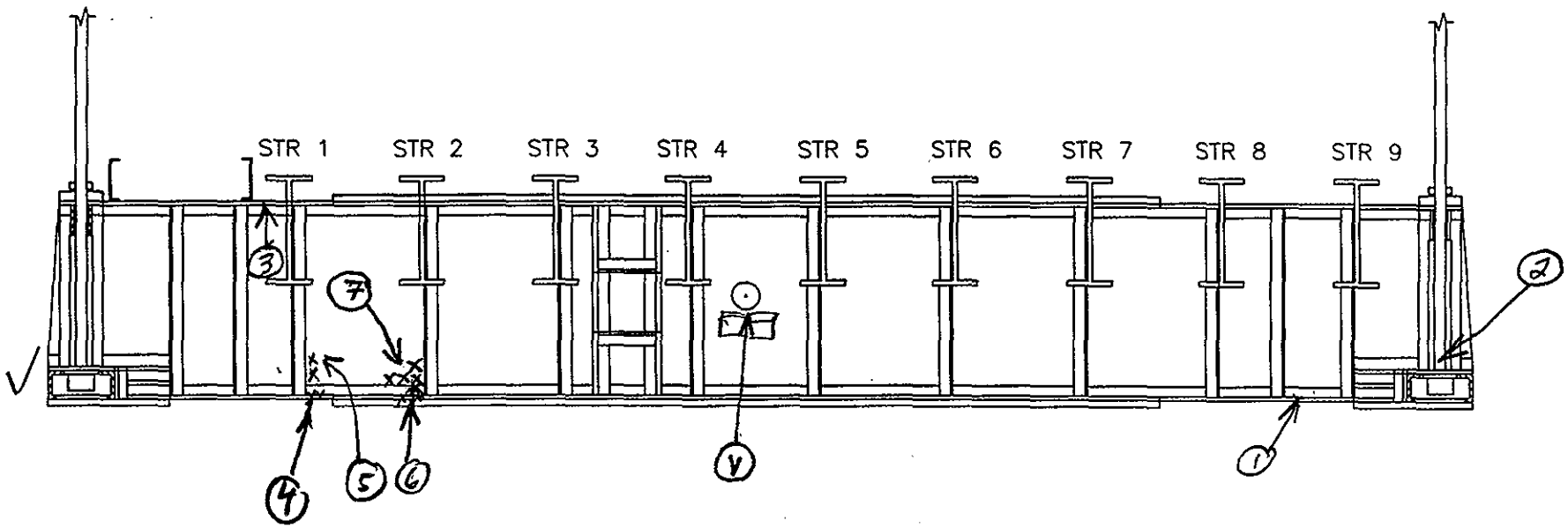

SPAN 1

FLOORBEAM 14 N ELEV.

NOTES: ① 1/8" pit x 4"Φ on top of horiz leg of bot FL ∡ of FB
② Hvy rust w/ 2 bolts with up to 30% loss on head plus 1 rivet hd w/up to 70% loss of section
③ 3/4 bend over 1' in top FL ∡ of FB [C2-D18-2,3]
④ 1/8" pit x 4" on top of bot FL ∡ of FB
⑤ 3/16" pit x 3" H on web of FB
⑥ 1/16" x FW pit on top of bot FL ∡ of FB plus 1/8" pit x FH of vert. leg of bot FL ∡
⑦ 1/8" x 1" pit on web of FB nr. bot FL ∡ plus 1/16" x 6" pit along base of web of FB

FLOORBEAM ELEVATION EL	
DEPARTMENT OF THE ARMY NEW ENGLAND DISTRICT CORPS OF ENGINEERS	
SAGAMORE HIGHWAY BRIDGE ROUTINE INSPECTION	
NOTES BY: LICHTENSTEIN CONSULTING ENGINEERS	
JOB #1986	DATE: 4/6/01
CREW: SP, EL, SD	SHEET 4 OF 9

86
199

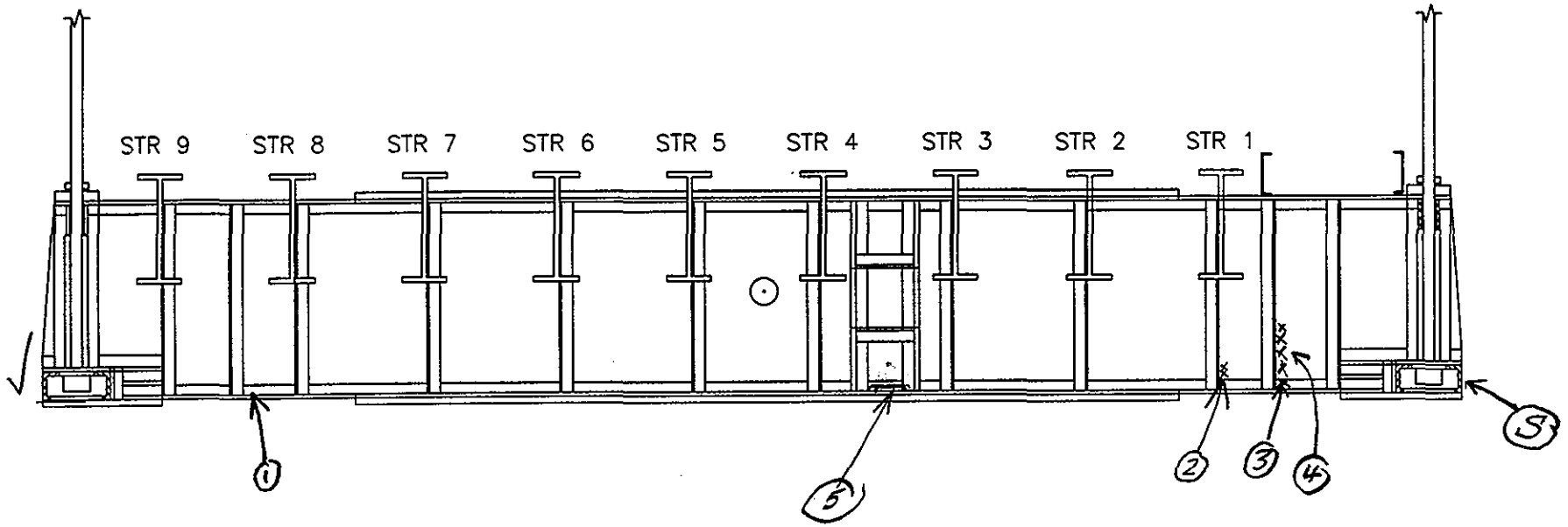

SPAN 1

FLOORBEAM 15 S ELEV.

NOTES: (1) 1/16" pit x 3"Φ on top of bot FL ∡ of FB
(2) 1/8" x 2 pit
(3) 1/16" x FH pit on vert leg on bot FL ∡ of FB
(4) 1/8" x 12" pit on web of FB
(5) 1½" x 1¼" PL welded to vert leg of bot FL (weld length 1½") C1-D11-1
(TYP. COND. ⊗)

FLOORBEAM ELEVATION EL

DEPARTMENT OF THE ARMY
NEW ENGLAND DISTRICT CORPS OF ENGINEERS

SAGAMORE HIGHWAY BRIDGE
ROUTINE INSPECTION

NOTES BY: LICHTENSTEIN
CONSULTING ENGINEERS

JOB #1986 | DATE: 4/6/01
CREW: SP, EL, SD | SHEET 3 OF 9

87
199

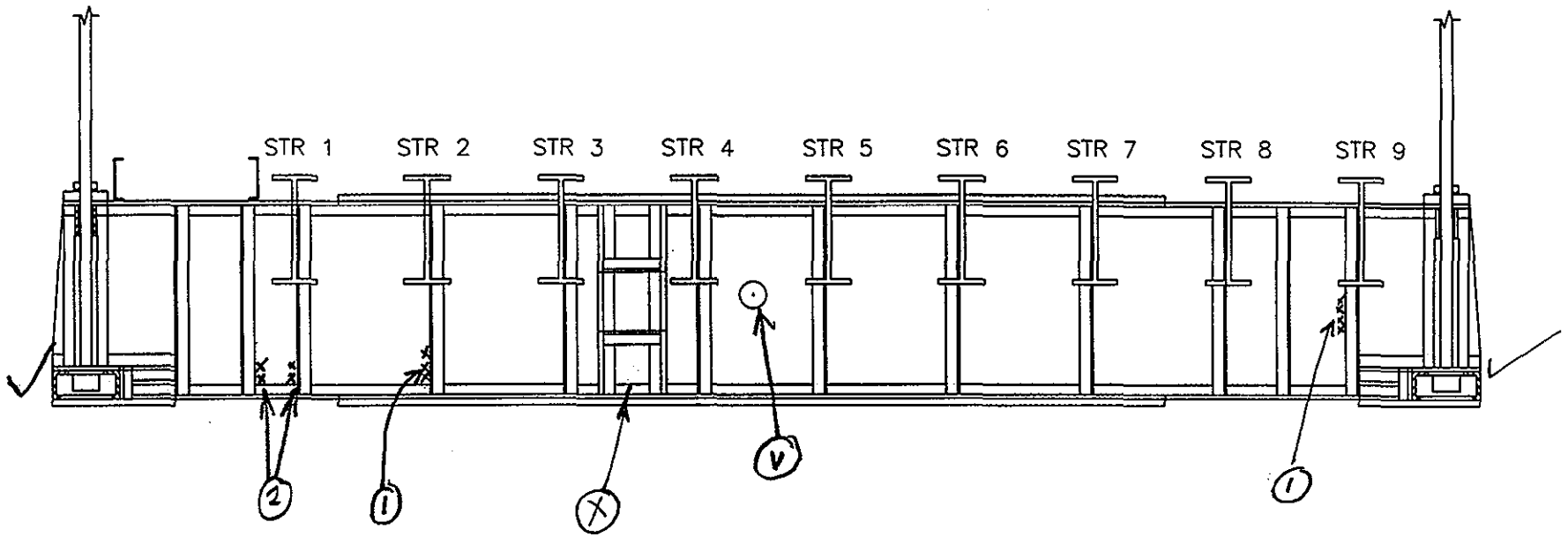

BB 1/13

SPAN 1

FLOORBEAM 15 N ELEV.

NOTES: (1) 1/8"x4" H pitting
(2) 1/8"x2" H "

FLOORBEAM ELEVATION EL

DEPARTMENT OF THE ARMY
NEW ENGLAND DISTRICT CORPS OF ENGINEERS

SAGAMORE HIGHWAY BRIDGE
ROUTINE INSPECTION

NOTES BY: LICHTENSTEIN
CONSULTING ENGINEERS

JOB #1986 DATE: 4.5.01

CREW: EL, SO, SP SHEET 6 OF 6

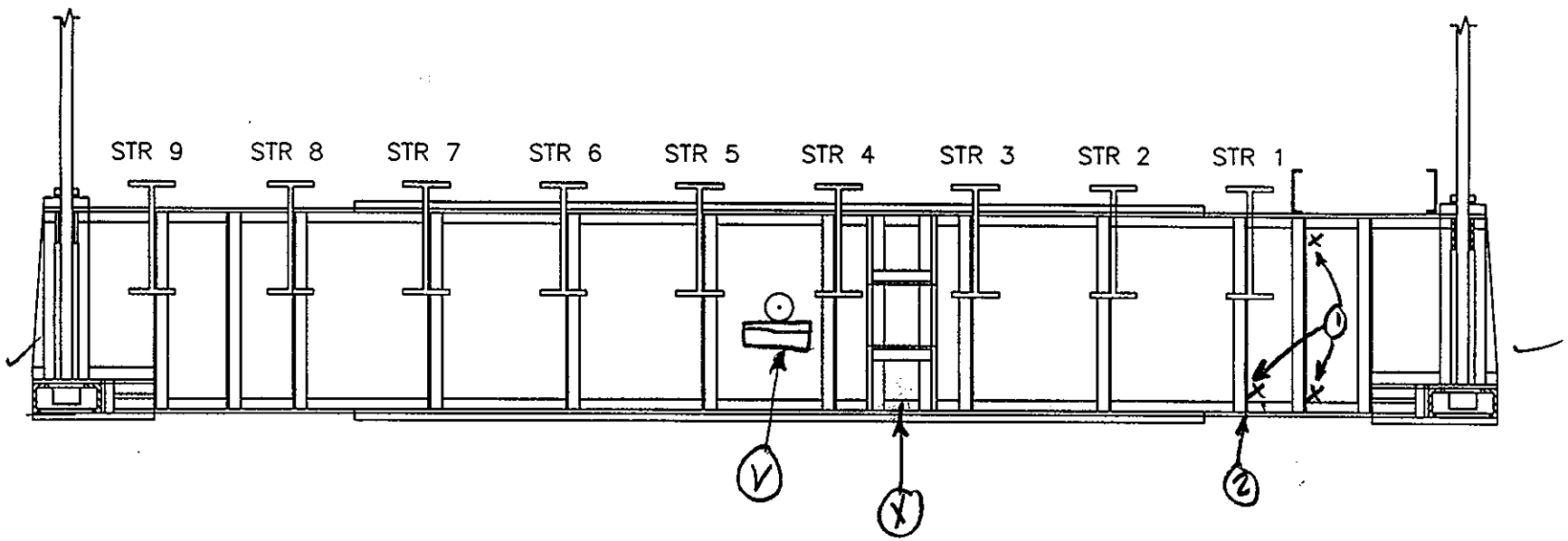

SPAN 1

FLOORBEAM 16 S ELEV.

NOTES:

① 8"×1" PITTING

② 8"×4" " ON TOP OF BOT. FL

FLOORBEAM ELEVATION EL

DEPARTMENT OF THE ARMY

NEW ENGLAND DISTRICT CORPS OF ENGINEERS

SAGAMORE HIGHWAY BRIDGE

ROUTINE INSPECTION

NOTES BY: LICHTENSTEIN

CONSULTING ENGINEERS

JOB #1986 DATE: 4·5·01

CREW: EL, SD, SP SHEET 5 OF 6

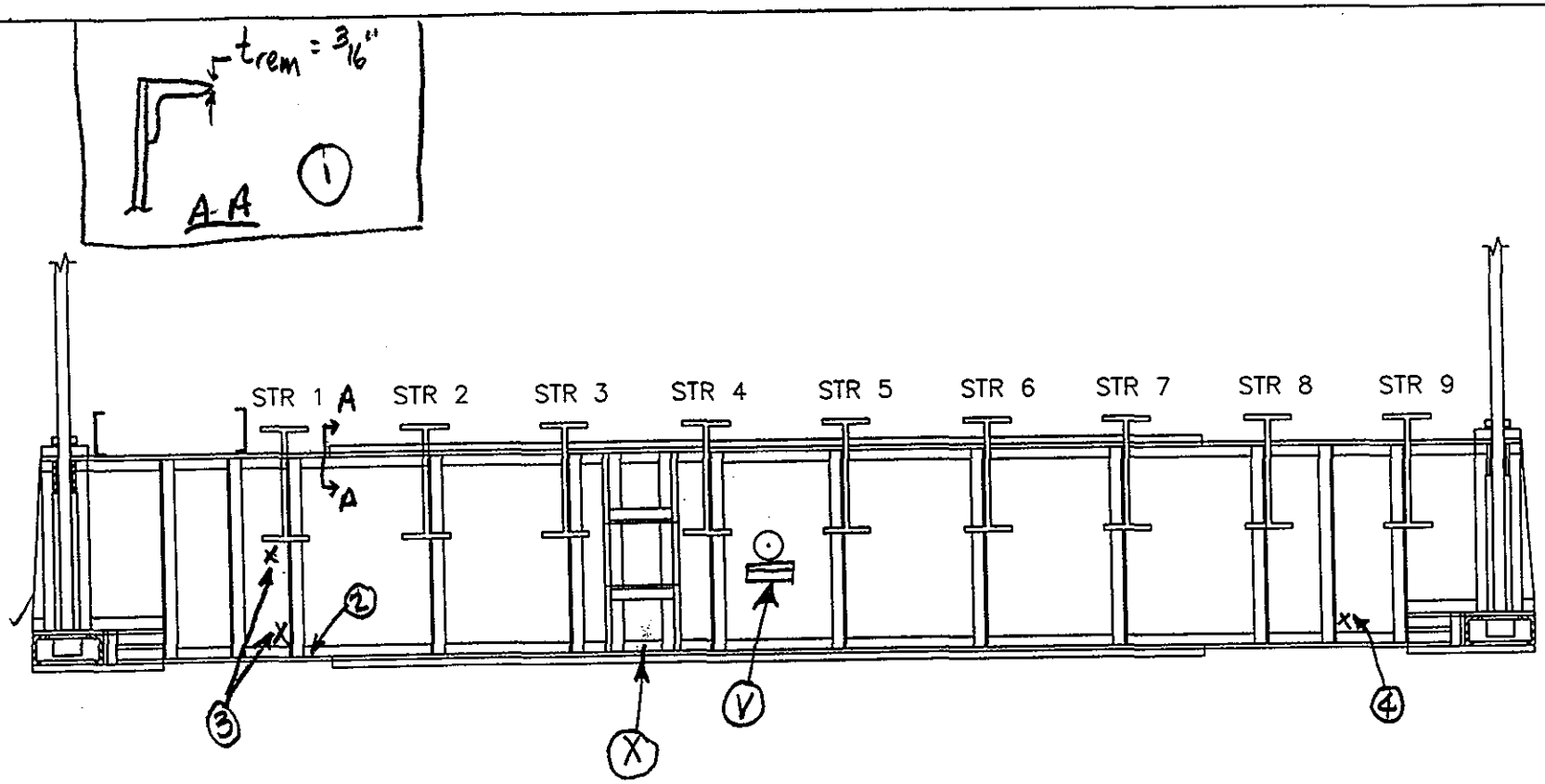

90
199

SPAN 1

FLOORBEAM 16 N ELEV.

FLOORBEAM ELEVATION EL

NOTES:

1. TOP FL & TAPERS TO FULL SECTION REMAINING @ WEB
2. 8"x4" PITTING ON TOP OF BOT FL
3. 16"x4" "
4. 8"x1" "

DEPARTMENT OF THE ARMY
NEW ENGLAND DISTRICT CORPS OF ENGINEERS

SAGAMORE HIGHWAY BRIDGE
ROUTINE INSPECTION

NOTES BY: LICHTENSTEIN
CONSULTING ENGINEERS

JOB #1986 | DATE: 4·5·01

CREW: EL, SD, SP | SHEET 3 OF 6

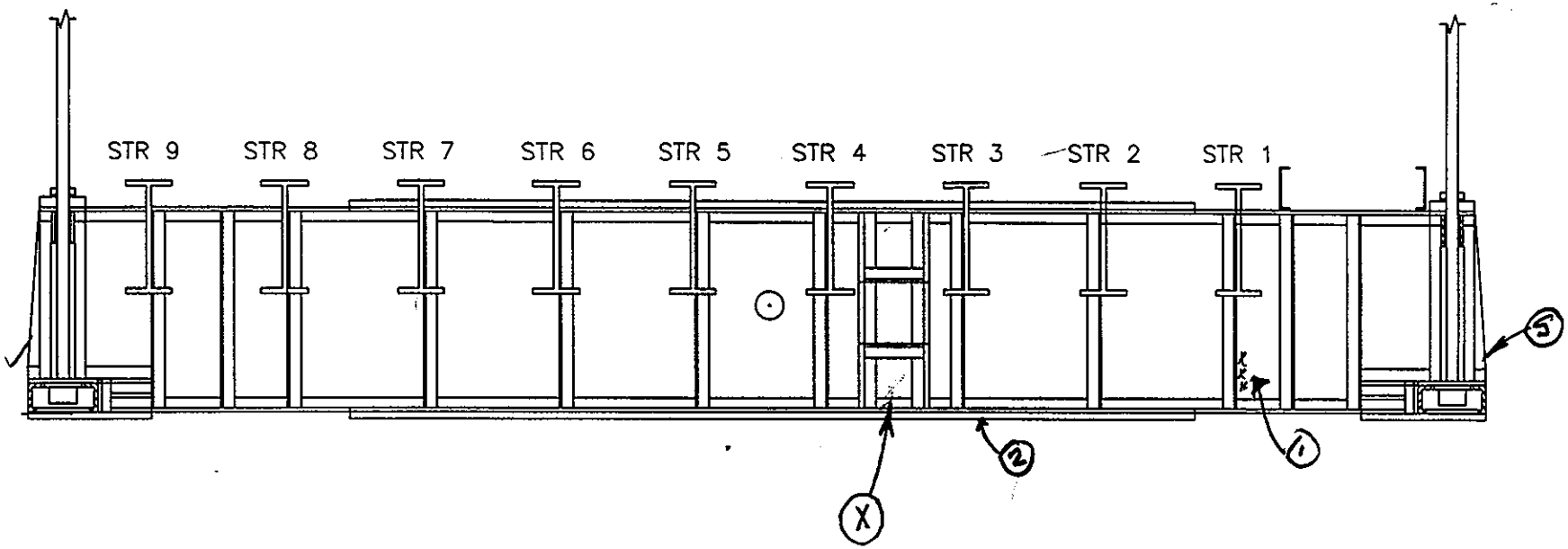

91
199

SPAN 1

FLOORBEAM 15' S ELEV.

NOTES:

1. 1/8" x 5" PITTING
2. 1/8" x 3/4" " ON TOP OF COV. PL

FLOORBEAM ELEVATION EL

DEPARTMENT OF THE ARMY
NEW ENGLAND DISTRICT CORPS OF ENGINEERS

SAGAMORE HIGHWAY BRIDGE
ROUTINE INSPECTION

NOTES BY: LICHTENSTEIN
CONSULTING ENGINEERS

JOB #1986 | DATE: 4-5-01

CREW: EL, SO, SP | SHEET 2 OF 6

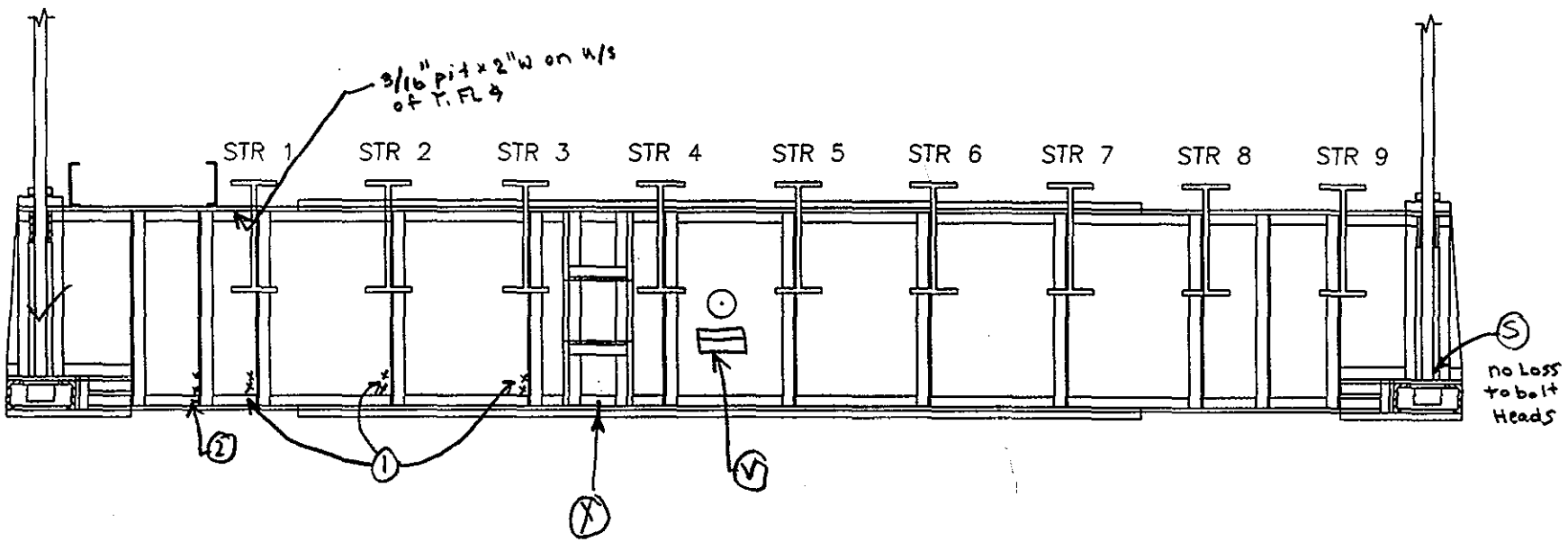

92
193

SPAN 1

FLOORBEAM 15' N ELEV.

NOTES:
1. 3/16" pit x 1" H on Web
2. 1/8" pit x FH of vert Leg of ∡ + 3/16" pit x 4" on Web

FLOORBEAM ELEVATION EL

DEPARTMENT OF THE ARMY
NEW ENGLAND DISTRICT CORPS OF ENGINEERS

SAGAMORE HIGHWAY BRIDGE
ROUTINE INSPECTION

NOTES BY: LICHTENSTEIN
CONSULTING ENGINEERS

JOB #1986 | DATE: 4/4/01

CREW: SD, SP | SHEET 8 OF 8

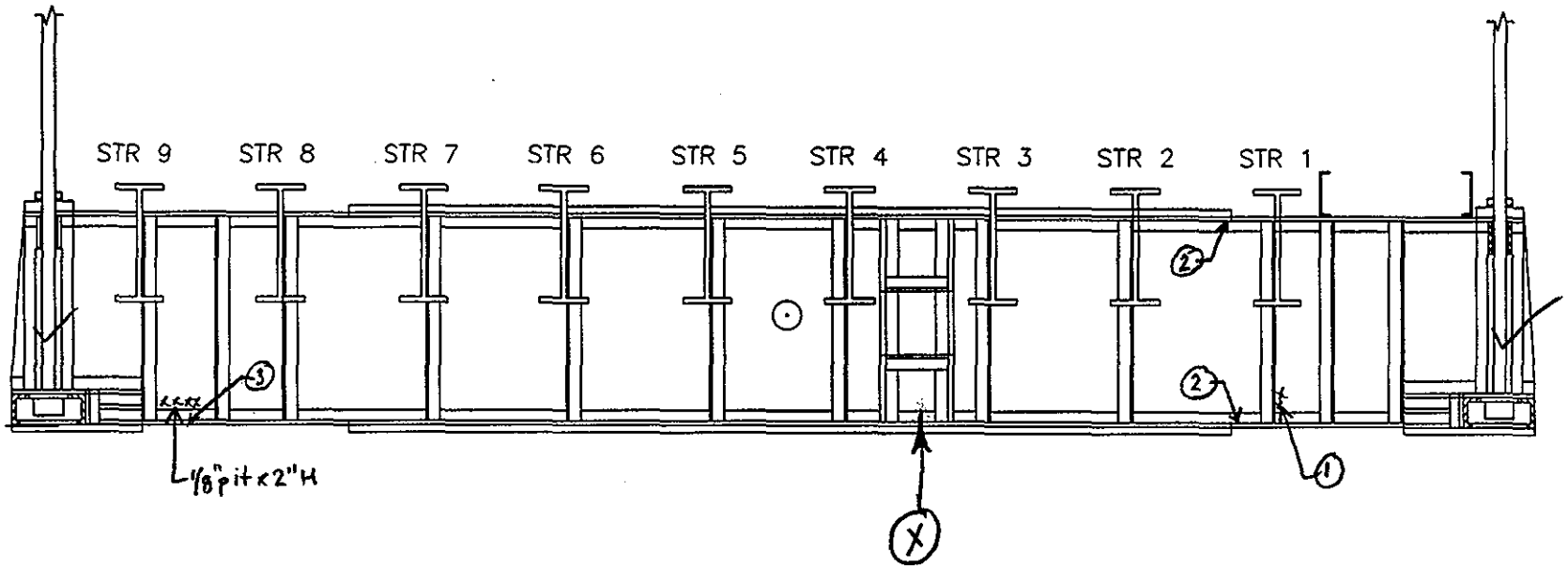

93
169

SPAN 1

FLOORBEAM 14' S ELEV.

NOTES:
1. 2" H pitt. w/ 1/4" ϕ Corrosion Hole in Center.
2. 1/16" pit x FW of bot FL ∡ & 1/8" pit x 2" W on w/s of Top FL ∡
3. 1/8" pit x 2" ϕ on Top of bot FL ∡

FLOORBEAM ELEVATION EL	
DEPARTMENT OF THE ARMY NEW ENGLAND DISTRICT CORPS OF ENGINEERS	
SAGAMORE HIGHWAY BRIDGE ROUTINE INSPECTION	
NOTES BY: LICHTENSTEIN CONSULTING ENGINEERS	
JOB #1986	DATE: 4/4/01
CREW: SD, SP	SHEET 7 OF 8

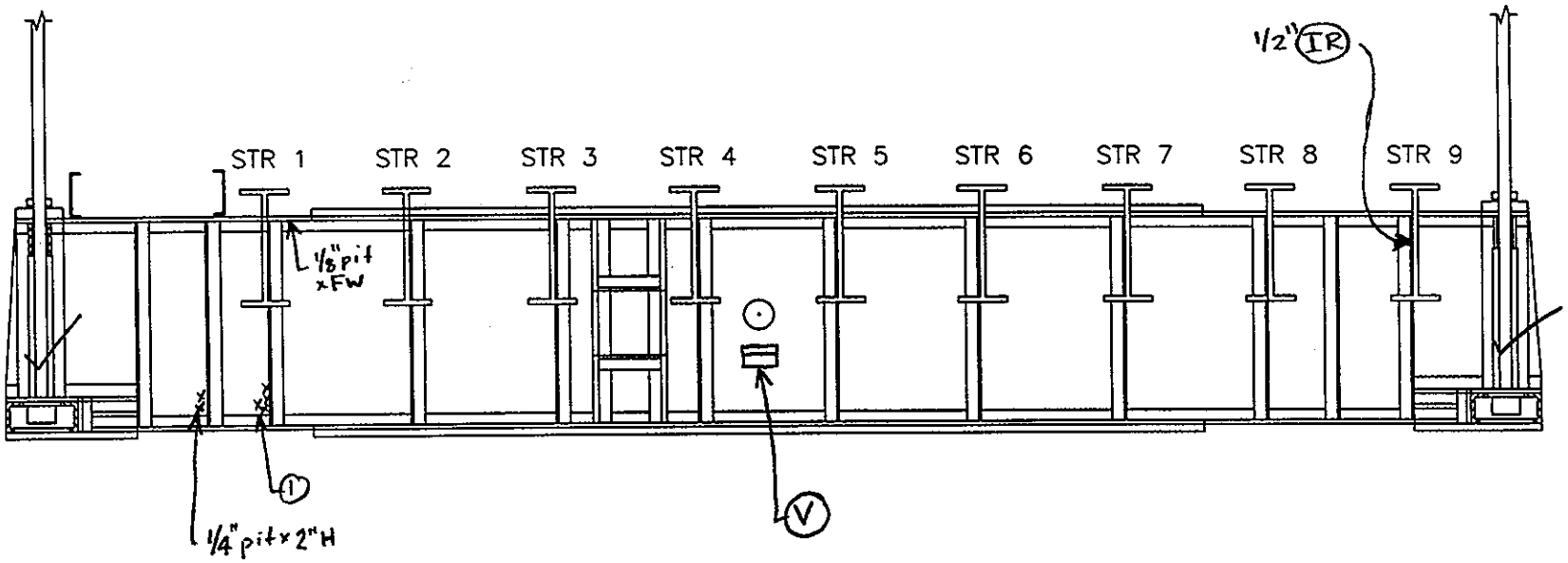

SPAN 1

FLOORBEAM 14' N ELEV.

NOTES: 1 4"H pitt. w/ 1/4"ϕ Hole 1" from bot. FL ∡

FLOORBEAM ELEVATION EL

DEPARTMENT OF THE ARMY
NEW ENGLAND DISTRICT CORPS OF ENGINEERS

SAGAMORE HIGHWAY BRIDGE
ROUTINE INSPECTION

NOTES BY: LICHTENSTEIN
CONSULTING ENGINEERS

JOB #1986 | DATE: 4/4/01

CREW: SD, SP | SHEET 6 OF 8

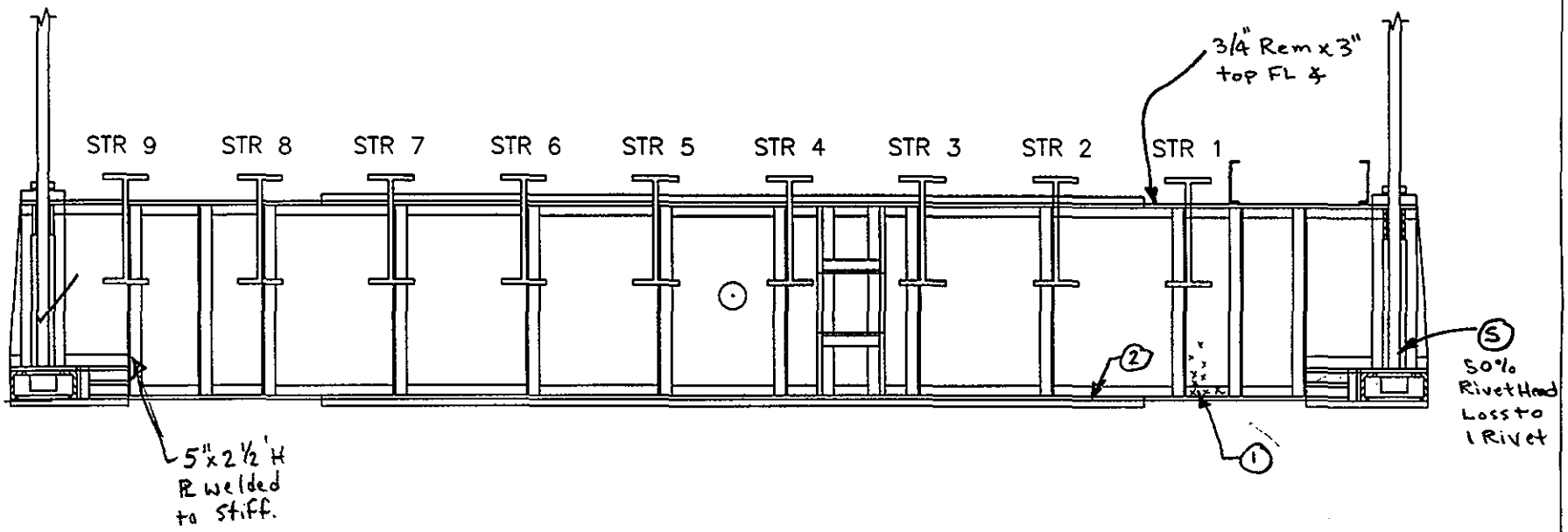

95
199

SPAN 1

FLOORBEAM 13' S ELEV.

NOTES:
1. 1/8" pit x FH of vert leg of ∠ + 1/8" pit x 8" H on web @ base
2. 1/16" pit x FW of bot FL ∠

FLOORBEAM ELEVATION EL

DEPARTMENT OF THE ARMY
NEW ENGLAND DISTRICT CORPS OF ENGINEERS

SAGAMORE HIGHWAY BRIDGE
ROUTINE INSPECTION

NOTES BY: LICHTENSTEIN
CONSULTING ENGINEERS

JOB #1986 | DATE: 4/4/01

CREW: SD, SP | SHEET 5 OF 8

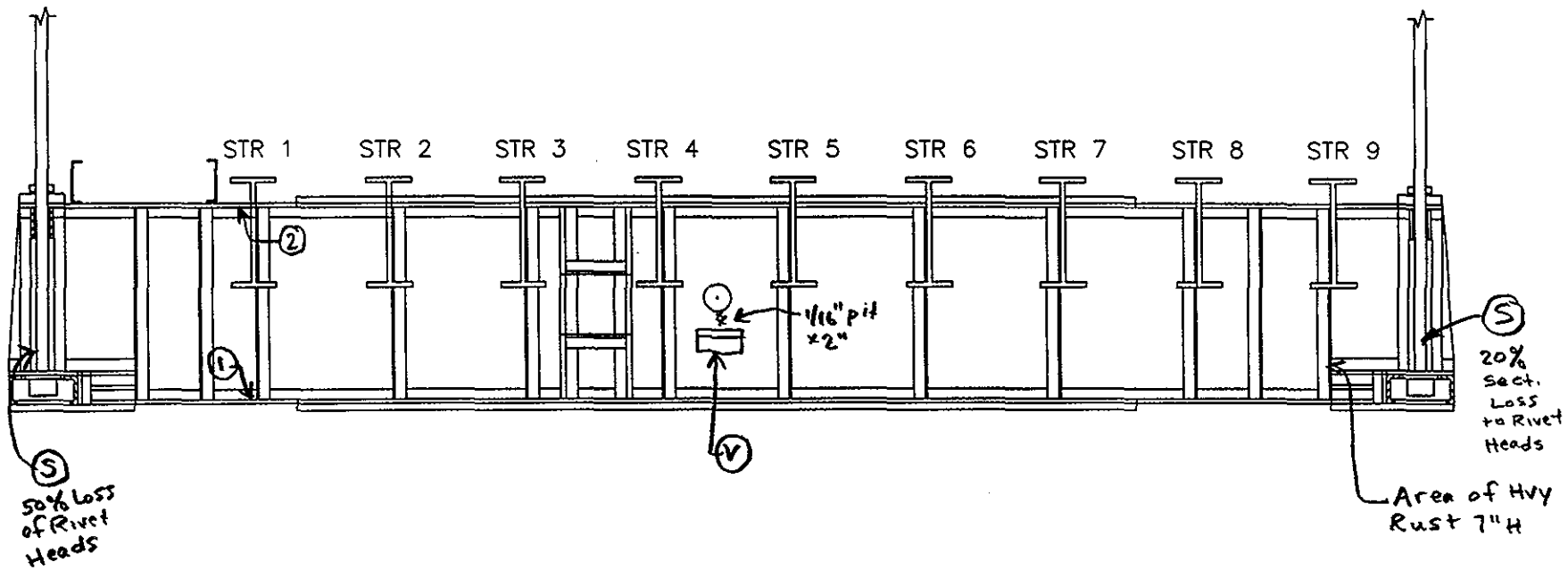

96
199

SPAN 1

FLOORBEAM 13' N ELEV.

NOTES:
1. 1/16" pit x 6" w on Top of bot FL ∡
2. 3/8" Rem x 1" w @ Top FL ∡

FLOORBEAM ELEVATION EL

DEPARTMENT OF THE ARMY
NEW ENGLAND DISTRICT CORPS OF ENGINEERS

SAGAMORE HIGHWAY BRIDGE
ROUTINE INSPECTION

NOTES BY: LICHTENSTEIN
CONSULTING ENGINEERS

JOB #1986 | DATE: 4/4/01

CREW: SD, SP, EL | SHEET 8 OF 9

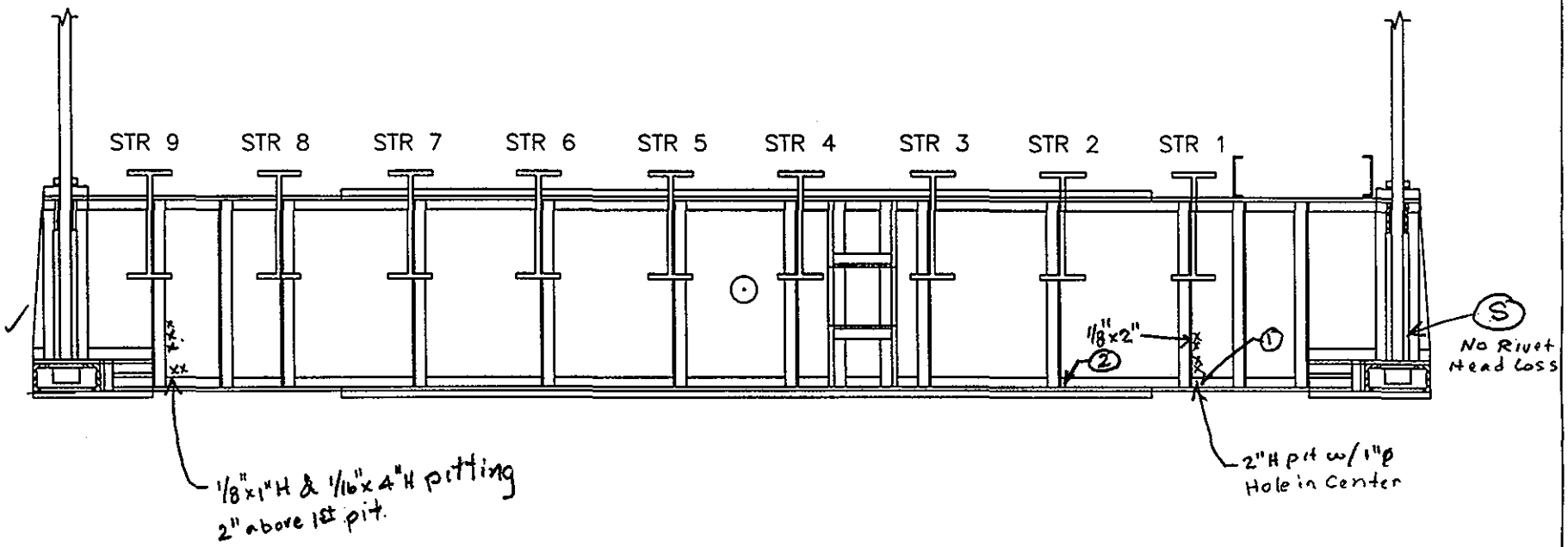

SPAN 1

FLOORBEAM 12' S ELEV.

NOTES: (1) 1/16"x6" w on Top of bot. FL 4 (Pitting)
(2) 1/8"x6" w " " " " " " "

FLOORBEAM ELEVATION EL	
DEPARTMENT OF THE ARMY NEW ENGLAND DISTRICT CORPS OF ENGINEERS	
SAGAMORE HIGHWAY BRIDGE ROUTINE INSPECTION	
NOTES BY: LICHTENSTEIN CONSULTING ENGINEERS	
JOB #1986	DATE: 4/4/01
CREW: SD, SP, EL	SHEET 7 OF 9

97
133

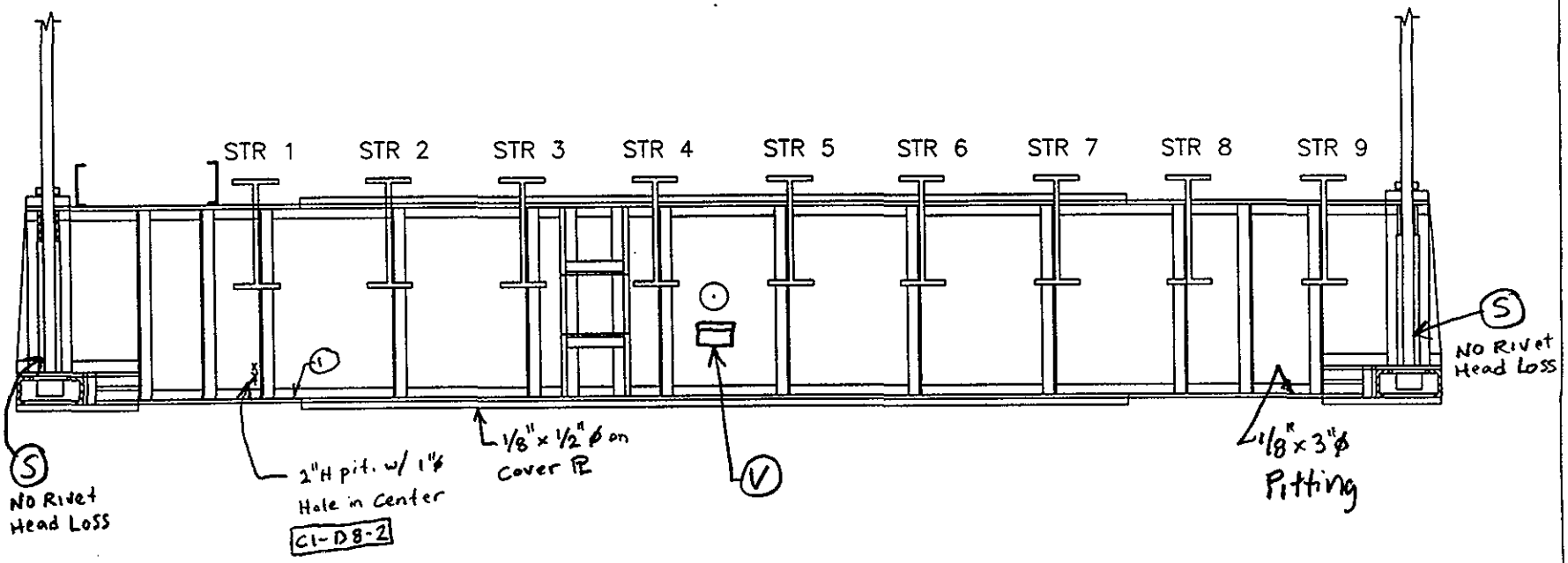

SB 199

SPAN 1

FLOORBEAM 12' N ELEV.

NOTES: (1) 1/8" pit x 6" w on Top of bot. FL. ✗

FLOORBEAM ELEVATION EL

DEPARTMENT OF THE ARMY
NEW ENGLAND DISTRICT CORPS OF ENGINEERS

SAGAMORE HIGHWAY BRIDGE
ROUTINE INSPECTION

NOTES BY: LICHTENSTEIN
CONSULTING ENGINEERS

JOB #1986 DATE: 4/4/01

CREW: SD, SP, EL SHEET 5 OF 9

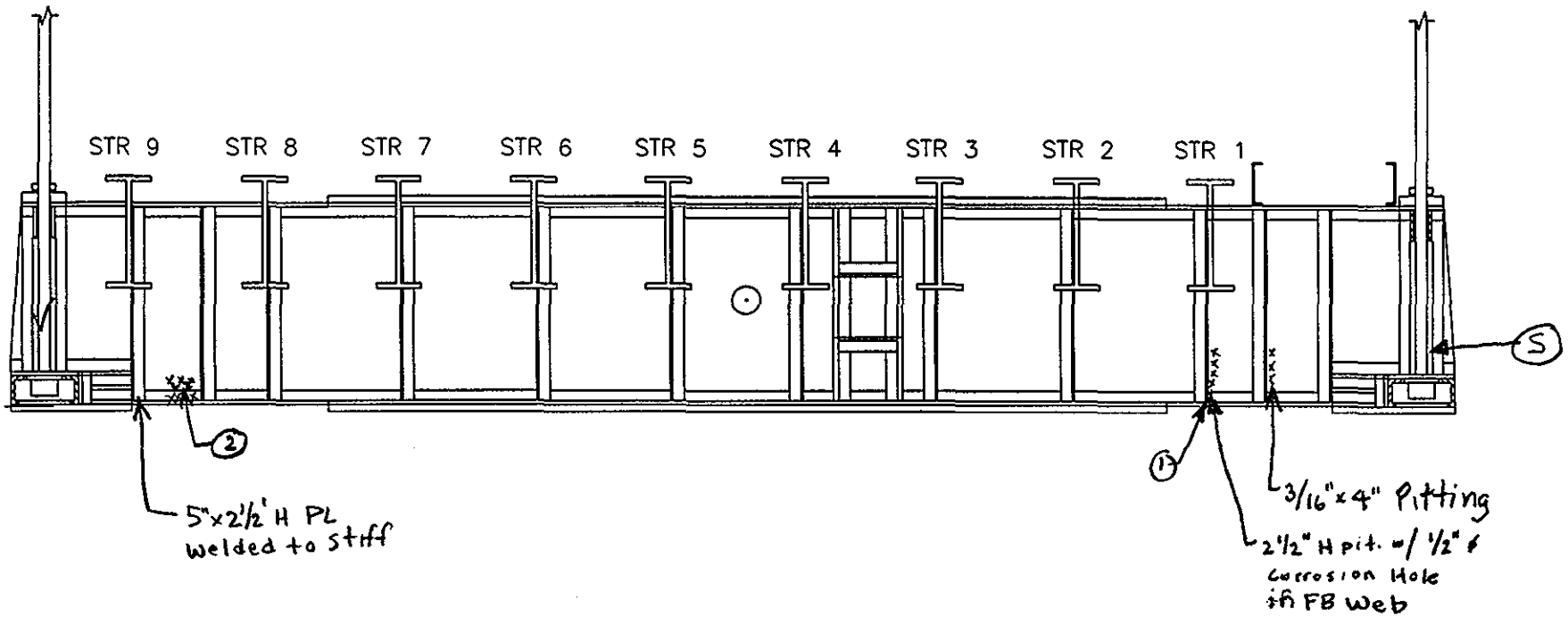

SPAN 1

FLOORBEAM 11' S ELEV.

NOTES:

① 3/16" pit x 5" w on Top of bot. FL ∠

② 1/8" pit x 3" H on Web & 1/8" x 1" H on Vert Leg of ∠ & 1/16" x 4" w on Horiz. Leg of ∠ & 1/8" pit x 3" w on u/s of bot FL ∠.

FLOORBEAM ELEVATION EL

DEPARTMENT OF THE ARMY
NEW ENGLAND DISTRICT CORPS OF ENGINEERS

SAGAMORE HIGHWAY BRIDGE
ROUTINE INSPECTION

NOTES BY: LICHTENSTEIN
CONSULTING ENGINEERS

JOB #1986 | DATE: 4/4/01

CREW: SD, EL, SP | SHEET 4 OF 9

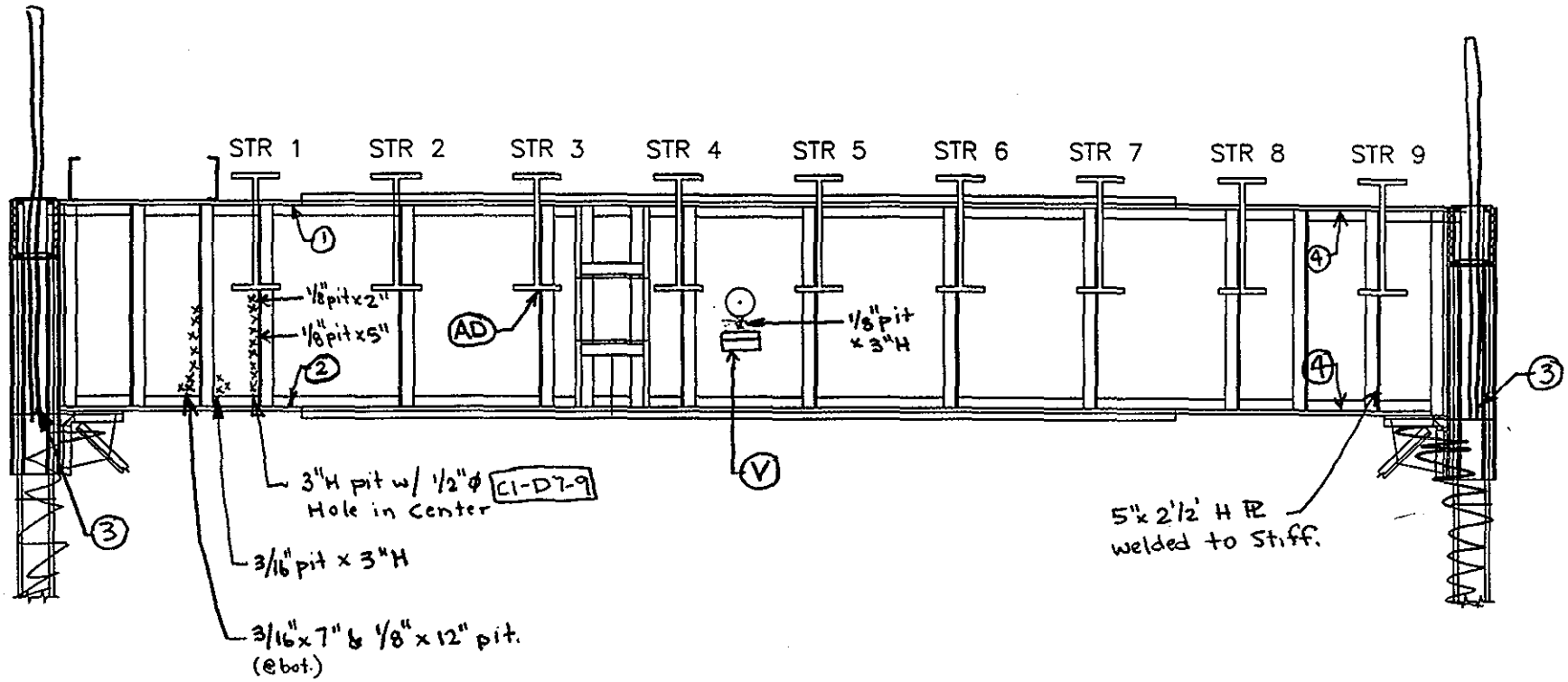

SPAN 1

FLOORBEAM 11' N ELEV.

NOTES:
1. 1/2" Rem. x F.W. of N. & S. Top FL. ∡
2. 1/8" pit x 5" W on Horiz. Leg of bot. FL ∡
3. Hvy Rust behind Susp. Cable C2-D10-5 w/ 90% S.L. of Rivet Heads
4. 1/8" pit x 3" W on Top of bot. FL ∡ & 1/16" pit x 4" W on bot of Top FL ∡

FLOORBEAM ELEVATION EL

DEPARTMENT OF THE ARMY
NEW ENGLAND DISTRICT CORPS OF ENGINEERS

SAGAMORE HIGHWAY BRIDGE
ROUTINE INSPECTION

NOTES BY: LICHTENSTEIN
CONSULTING ENGINEERS

JOB #1986 | DATE: 4/4/01

CREW: SD, EL, SP | SHEET 3 OF 9

100
199

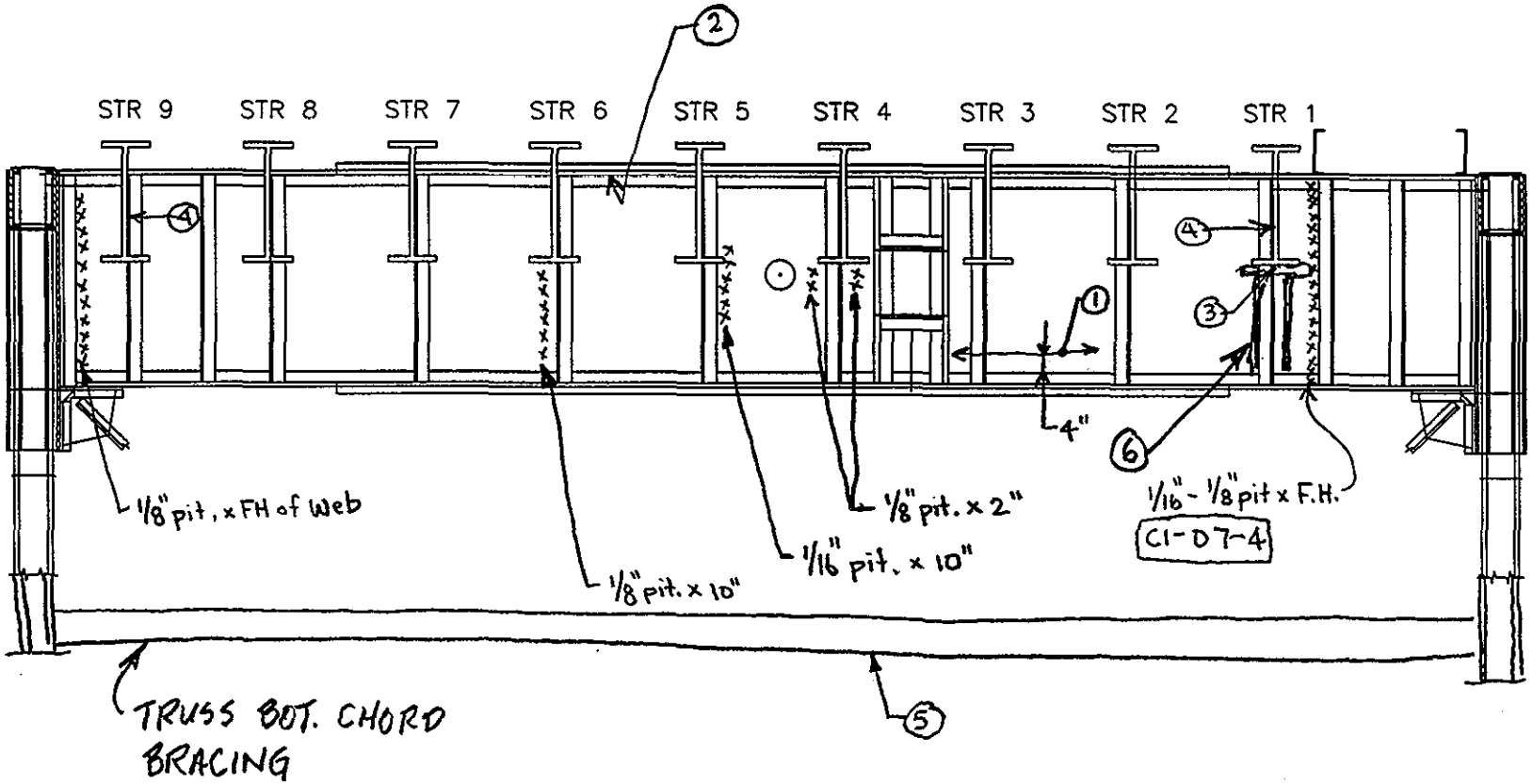

SPAN 1

FLOORBEAM 10' S ELEV.

NOTES:

1. Remains of PL (1/2" wide) welded to web of FB (Full Length) C2-D10-3
2. Top FL of FB has blank holes matching bot. FL Cover PL fastening pattern.
3. 1/2" IR btwn. bearing PL's.
4. Med Rust on Str. @ Conn. C1-D7-5
5. Areas of 3/16" pit x upto 6"ϕ one area of 1/2"ϕ 100 SL. C1-D7-6
6. STR. BRG PEDESTAL ~ TYP. ALL STR'S THIS VIEW

FLOORBEAM ELEVATION EL	
DEPARTMENT OF THE ARMY NEW ENGLAND DISTRICT CORPS OF ENGINEERS	
SAGAMORE HIGHWAY BRIDGE ROUTINE INSPECTION	
NOTES BY: LICHTENSTEIN CONSULTING ENGINEERS	
JOB #1986	DATE: 4/4/01
CREW: SD, EL, SP	SHEET 2 OF 9

101
199

102
199

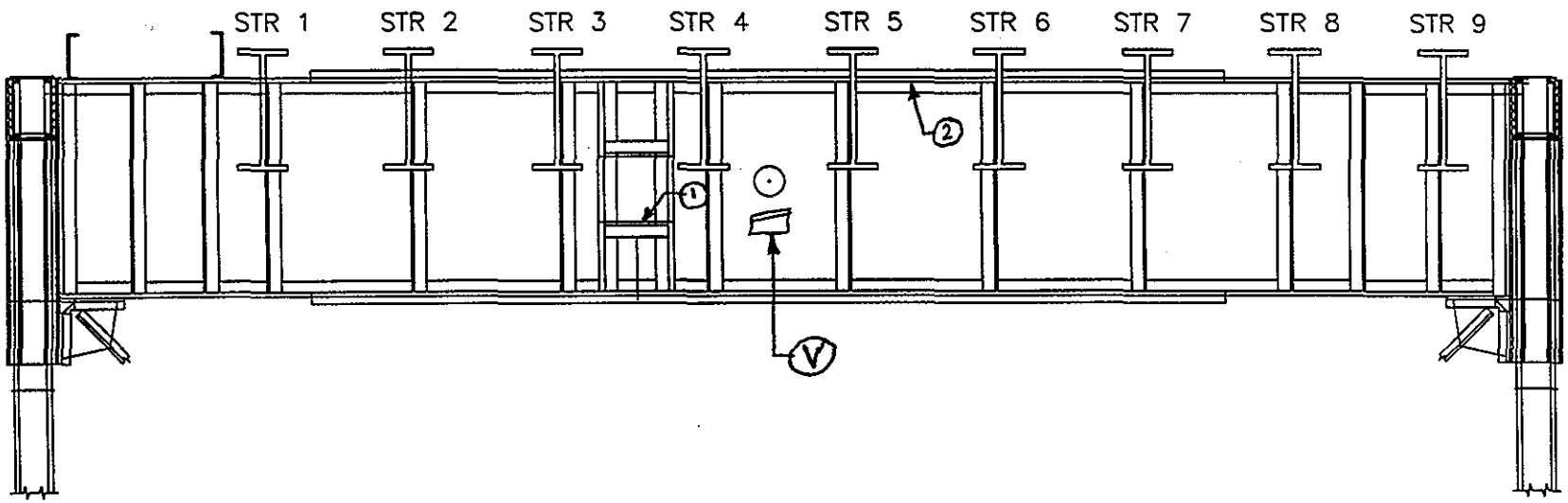

SPAN 1

FLOORBEAM 10' N ELEV.

NOTES:
1. 3/4" ϕ Hole in OSL of ∡ . C2-D11-1
2. Top FL ∡ has blank holes matching bot. FL Cover PL pattern.

FLOORBEAM ELEVATION EL

DEPARTMENT OF THE ARMY
NEW ENGLAND DISTRICT CORPS OF ENGINEERS

SAGAMORE HIGHWAY BRIDGE
ROUTINE INSPECTION

NOTES BY: LICHTENSTEIN
CONSULTING ENGINEERS

JOB #1986 | DATE: 4/4/01

CREW: SD, SP | SHEET 3 OF 8

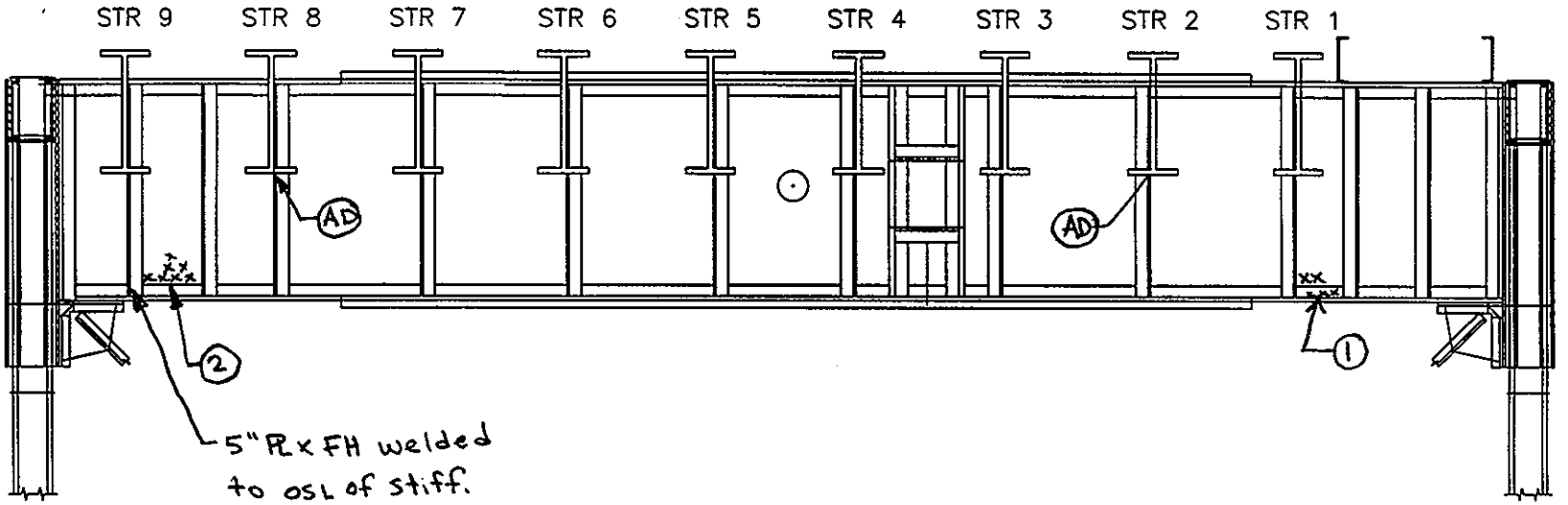

103
199

SPAN 1

FLOORBEAM 9' S ELEV.

NOTES:
1. 1/8" pit x 3" H on web & 1/16" pit x 1" H on vert. leg of bot FL. ∡
2. 1/8" pit x 4" H on web

FLOORBEAM ELEVATION EL

DEPARTMENT OF THE ARMY
NEW ENGLAND DISTRICT CORPS OF ENGINEERS

SAGAMORE HIGHWAY BRIDGE
ROUTINE INSPECTION

NOTES BY: LICHTENSTEIN
CONSULTING ENGINEERS

JOB #1986 | DATE: 4/4/01
CREW: SD, SP | SHEET 2 OF 8

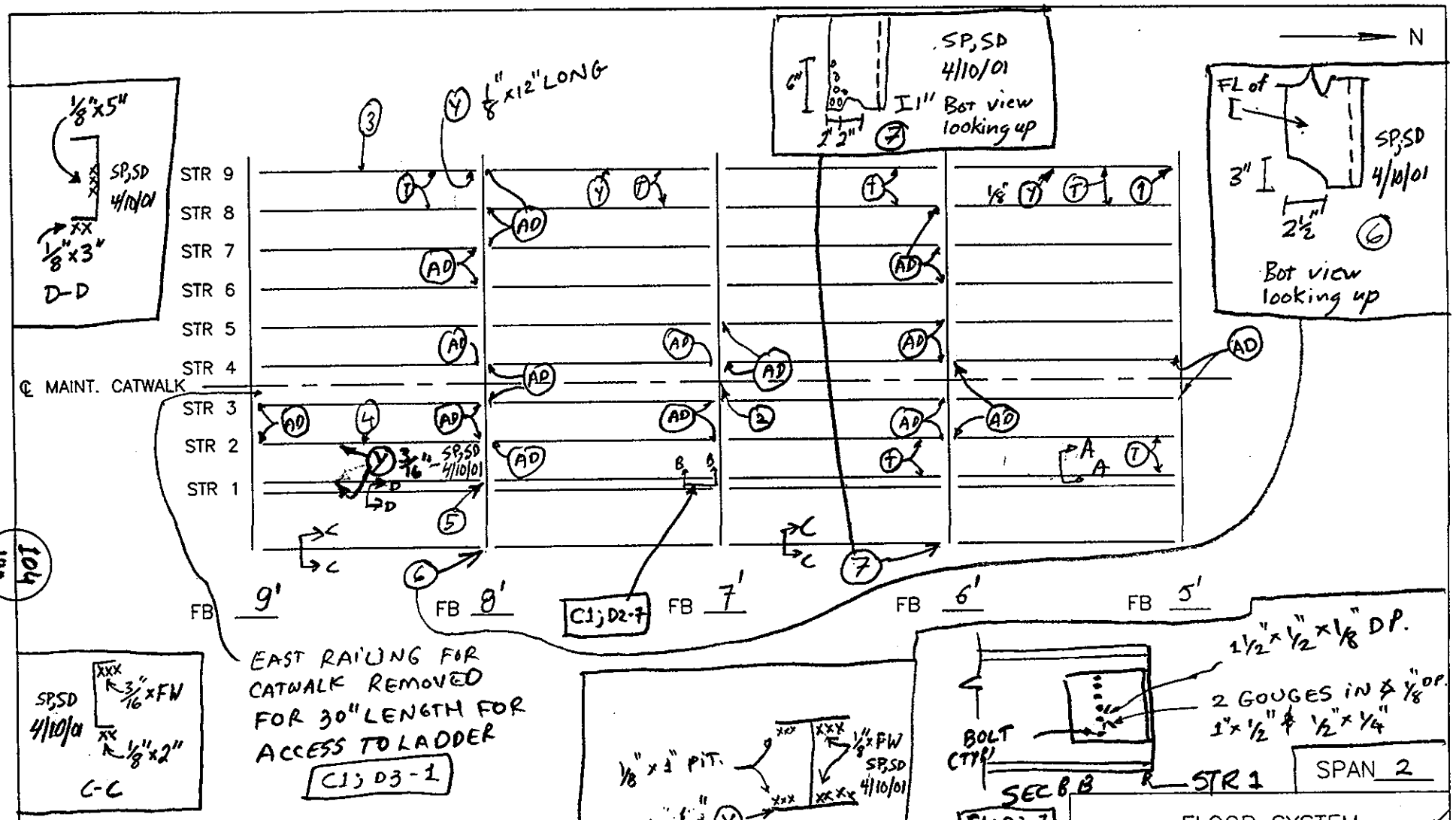

SPAN 2

FLOOR SYSTEM

EL

NOTES:

1. HEAVY PIT. AT END OF STR. BOT. FL. 12" LONG TAPERS TO t=0" REM AT FB
2. MISSING BOLT AT CATWALK HANDRAIL CONN. TO FB (EAST SIDE)
3. 1/8" x 4" PITTING ON U/S OF TOP WEST FL AT 10' FROM FB 8'
4. 1/8" x 6" PITTING ON U/S OF BOT. FL
5. 5"x30" H.R. welded to stiffener - SP,SD. 4/10/01
6. 100% section loss at bot of bot FL of [C2-D22-1 - SP,SD 4/10/01
7. Numerous corrosion holes in bot FL of [- SP,SD 4/10/01

DEPARTMENT OF THE ARMY
NEW ENGLAND DISTRICT CORPS OF ENGINEERS

SAGAMORE HIGHWAY BRIDGE
ROUTINE INSPECTION

NOTES BY: LICHTENSTEIN
CONSULTING ENGINEERS

JOB #1986 | DATE: 03/21/01

CREW: AP, EL | SHEET 2 OF 9

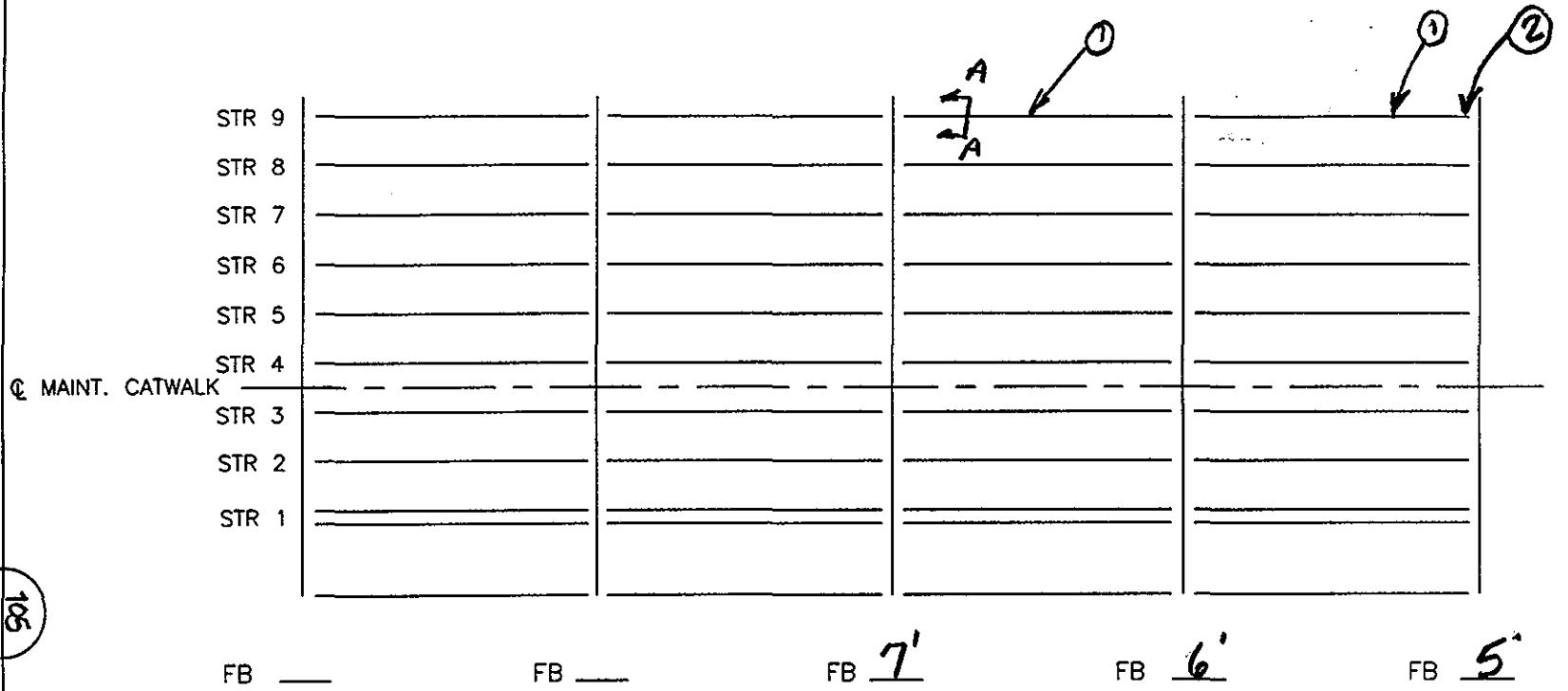

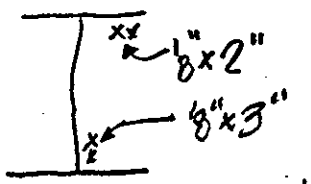

AA ~ 10' FROM FB 7'

SPAN 2

NOTES:

1. 1/8"x2" PITTING ON u/s W. TOP FL
2. " " " ON WEB

FLOOR SYSTEM EL

DEPARTMENT OF THE ARMY
NEW ENGLAND DISTRICT CORPS OF ENGINEERS

SAGAMORE HIGHWAY BRIDGE
ROUTINE INSPECTION

NOTES BY: LICHTENSTEIN
CONSULTING ENGINEERS

JOB #1986 | DATE: 3/20/01

CREW: EL, SD, AP | SHEET 3 OF 4

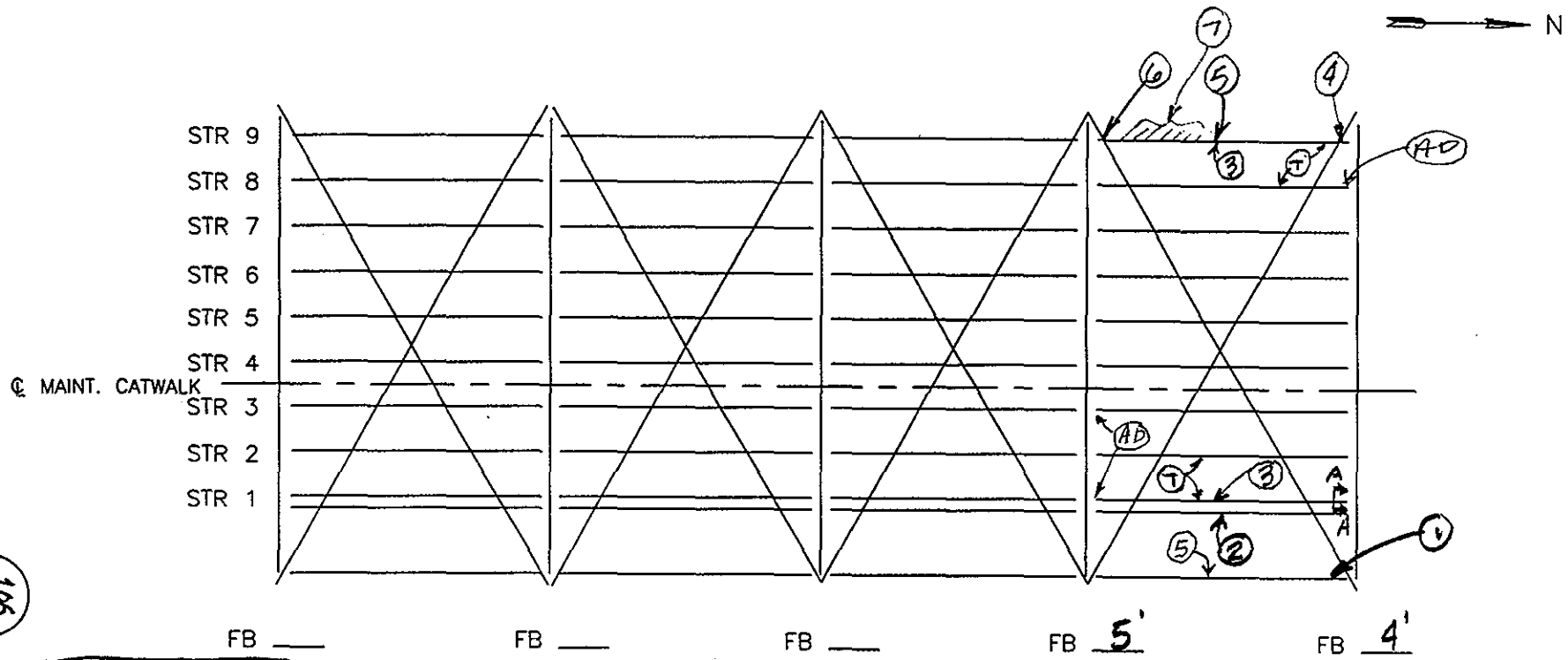

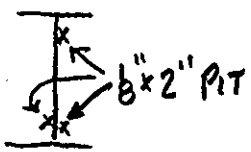

SECT. A-A

SPAN 2

NOTES:

1. 8"x2" PITTING ON WEB
2. " " " " U/S BOT FL
3. " " " " " TOP FL
4. 3/16"x1" " ON WEB
5. 8"x2" PITTING ON U/S OF TOP FL
6. 1/16"x4" " ON WEB
7. HV4 RUST w/ AREAS OF 100% LOSS IN DECK PAN

FLOOR SYSTEM EL	
DEPARTMENT OF THE ARMY NEW ENGLAND DISTRICT CORPS OF ENGINEERS	
SAGAMORE HIGHWAY BRIDGE ROUTINE INSPECTION	
NOTES BY: LICHTENSTEIN CONSULTING ENGINEERS	
JOB #1986	DATE: 3·23·01
CREW: EL, AP	SHEET 6 OF 8

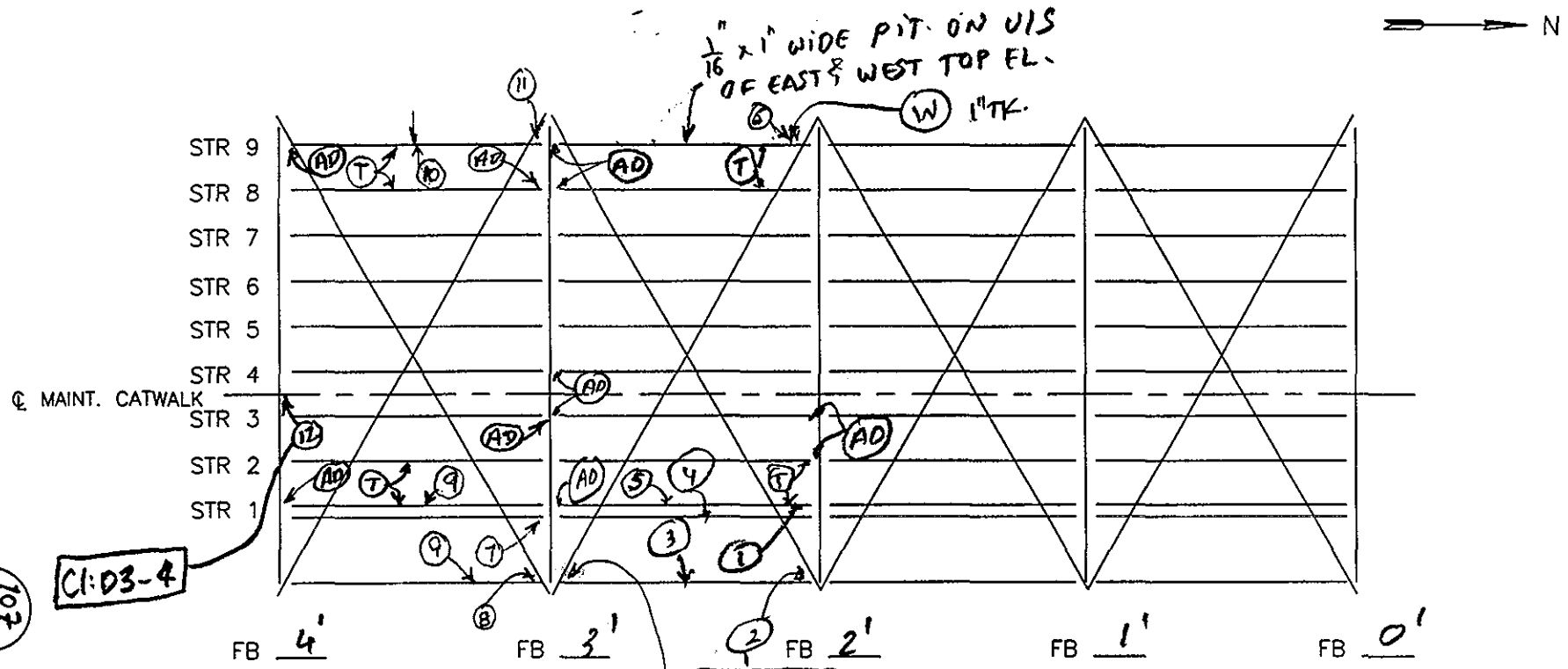

⑨ 1/16"x 2" PITTING ON U/S OF W. TOP FL

⑩ " " " " " " "DE" "

⑪ 3/16"x3" " " W. WEB

⑫ 2 OF 2 BOLTS MISSING ON CATWALK E. RAIL CONN. TO FLBM

SPAN 2

NOTES:

1. 1/8"x2" HIGH PIT. ON WEB
2. 3/16"x 8" HIGH PIT. ON WEB C1; D3-2
3. 1/8"x FW PIT. ON UNDERSIDE OF WEST TOP FL.
4. 1/8"x2" PIT ON UNDERSIDE OF ISOL. FL.
5. 1/16"x3" PIT ON UNDERSIDE OF WEST TOP FL.
6. 1/8"x3" PIT. ON WEST WEB OF STR. 9
7. 1/16"x1" PITTING ON WEB
8. 1/16"x3" " " "

FLOOR SYSTEM EL	
DEPARTMENT OF THE ARMY NEW ENGLAND DISTRICT CORPS OF ENGINEERS	
SAGAMORE HIGHWAY BRIDGE ROUTINE INSPECTION	
NOTES BY: LICHTENSTEIN CONSULTING ENGINEERS	
JOB #1986	DATE: 03/23/01
CREW: AP EL	SHEET 2 OF 8

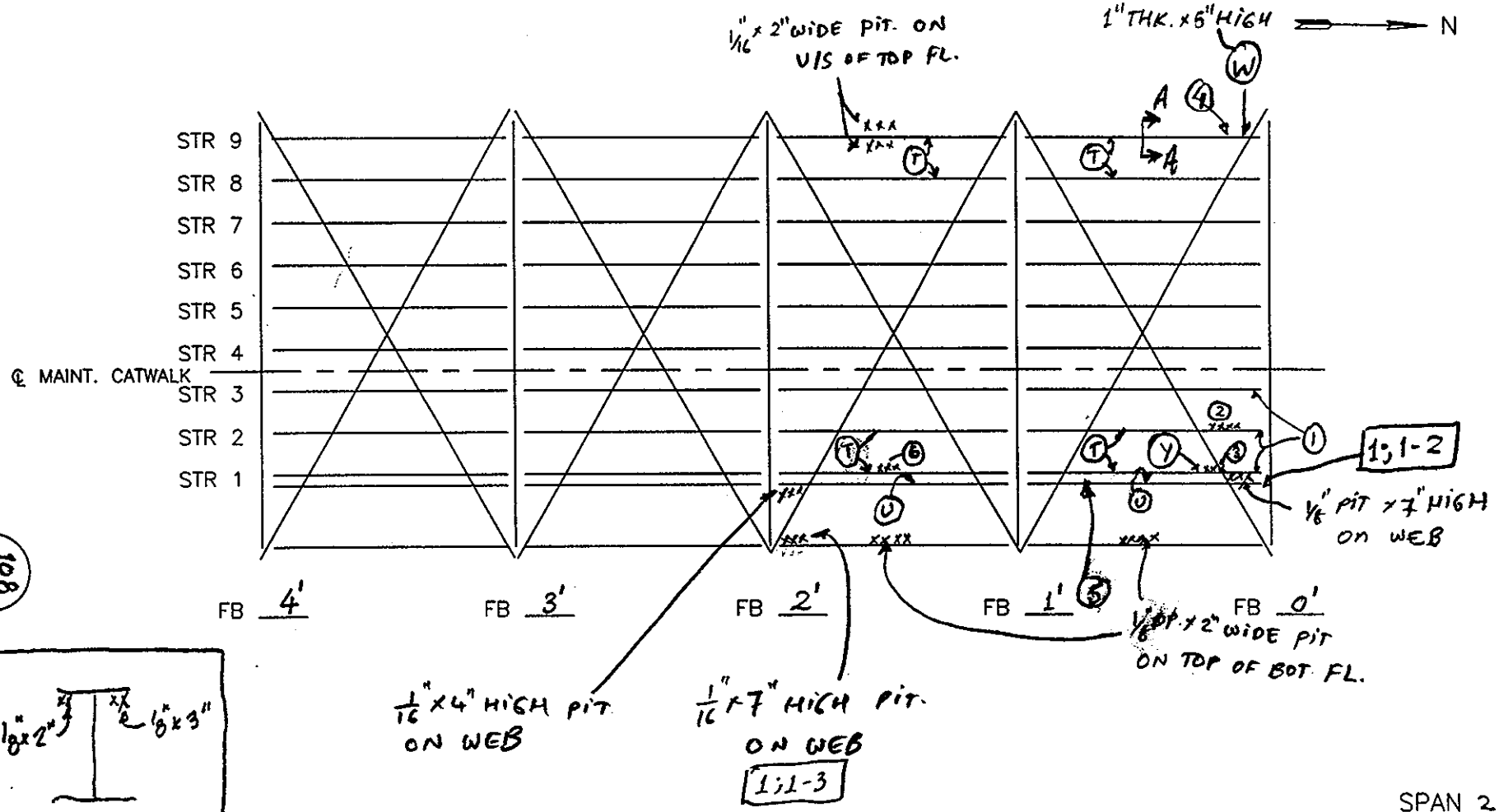

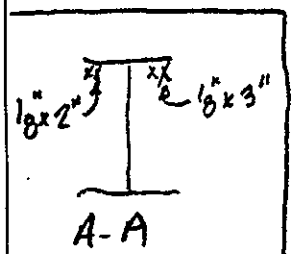

SPAN 2

NOTES:

1. JAGGED EDGE FLAME CUT COPE IN STR. WEB
2. 1/16" TO 1/8" x 1" WIDE PIT ON BOT OF TOP FL.
3. 1/8" x F.W. PIT ON TOP OF WEST BOT. FL. STR. 1
4. 1/8" PIT x 3" DIAMETER ON WEB
5. PINHOLES & MOD-HVY RUST IN DECK PANS BTWN S1 & INT SIDEWALK STR; FB0'-1'
6. 1/16" x 2" PIT. U/S OF TOP FL

FLOOR SYSTEM EL	
DEPARTMENT OF THE ARMY NEW ENGLAND DISTRICT CORPS OF ENGINEERS	
SAGAMORE HIGHWAY BRIDGE ROUTINE INSPECTION	
NOTES BY: LICHTENSTEIN CONSULTING ENGINEERS	
JOB #1986	DATE: 03/29/01
CREW: AP, EL	SHEET 3 OF 6

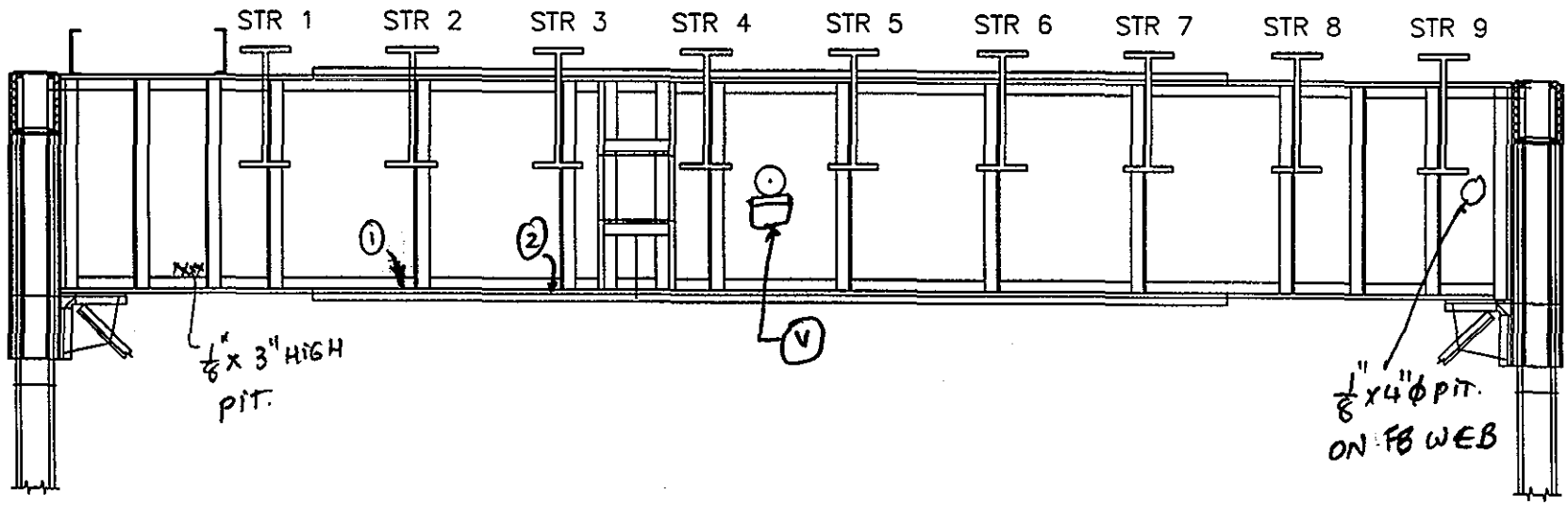

SPAN 2

FLOORBEAM 9' N ELEV.

NOTES:
1. 1/8" x 2" ϕ PIT. ON TOP OF BOT. FL
2. 1/8" x 3/4" ϕ PIT ON TOP OF COV. PL

FLOORBEAM ELEVATION EL	
DEPARTMENT OF THE ARMY NEW ENGLAND DISTRICT CORPS OF ENGINEERS	
SAGAMORE HIGHWAY BRIDGE ROUTINE INSPECTION	
NOTES BY: LICHTENSTEIN CONSULTING ENGINEERS	
JOB #1986	DATE: 03/21/01
CREW: AP, EL	SHEET 9 OF 9

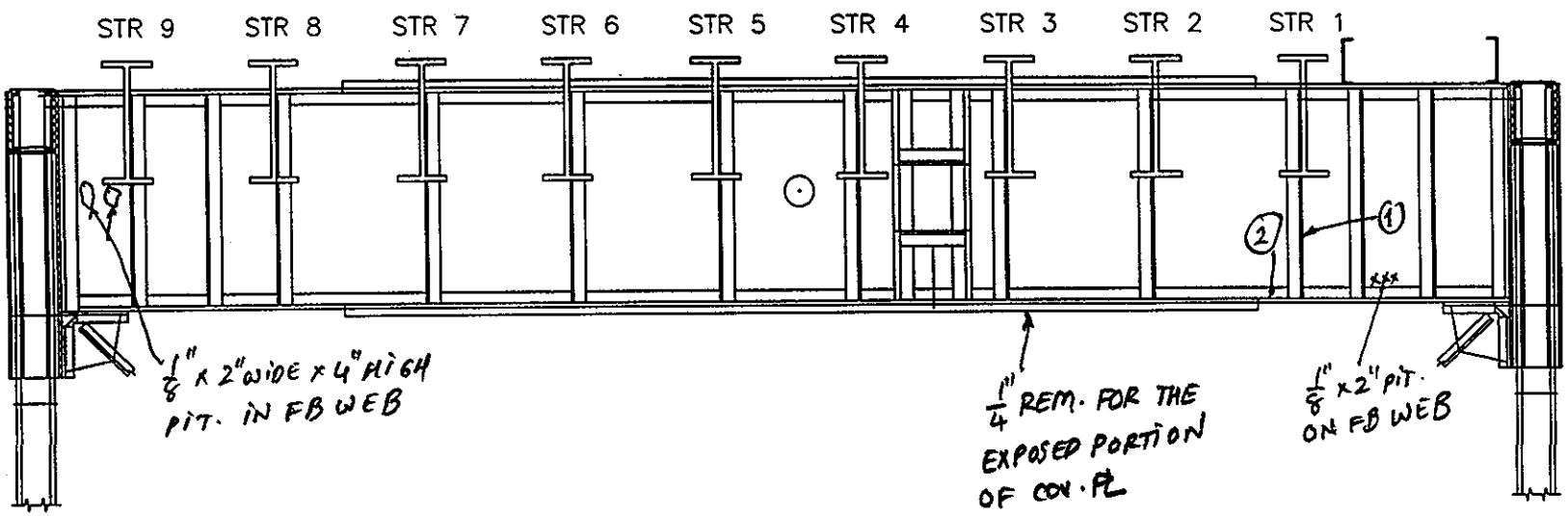

110

SPAN 2

FLOORBEAM 8' S ELEV.

NOTES:
1. REPAIR PL. WELDED TO STIFF. & OSL
2. 1/8" x 5" PIT. ON TOP OF BOT. FL

FLOORBEAM ELEVATION EL

DEPARTMENT OF THE ARMY
NEW ENGLAND DISTRICT CORPS OF ENGINEERS

SAGAMORE HIGHWAY BRIDGE
ROUTINE INSPECTION

NOTES BY: LICHTENSTEIN
CONSULTING ENGINEERS

JOB #1986 | DATE: 03/21/01

CREW: AP, EL | SHEET 8 OF 9

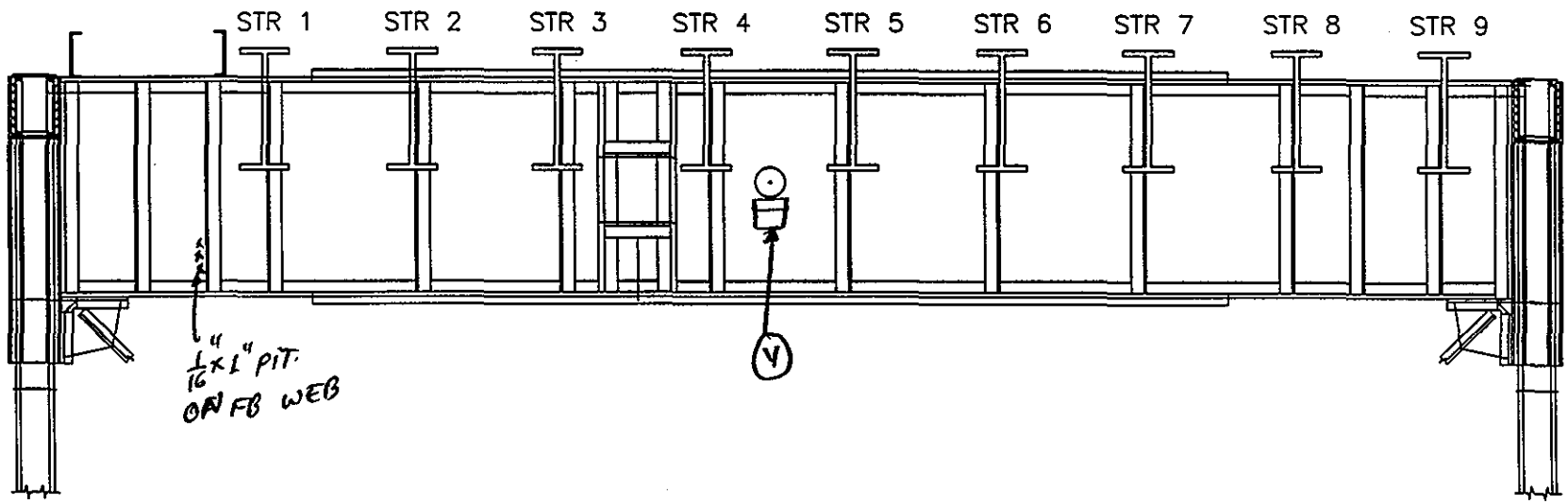

SPAN 2

FLOORBEAM 8'

N ELEV.

NOTES:

FLOORBEAM ELEVATION EL

DEPARTMENT OF THE ARMY

NEW ENGLAND DISTRICT CORPS OF ENGINEERS

SAGAMORE HIGHWAY BRIDGE

ROUTINE INSPECTION

NOTES BY: LICHTENSTEIN

CONSULTING ENGINEERS

JOB #1986 | DATE: 03/21/01

CREW: AP, EL | SHEET 7 OF 9

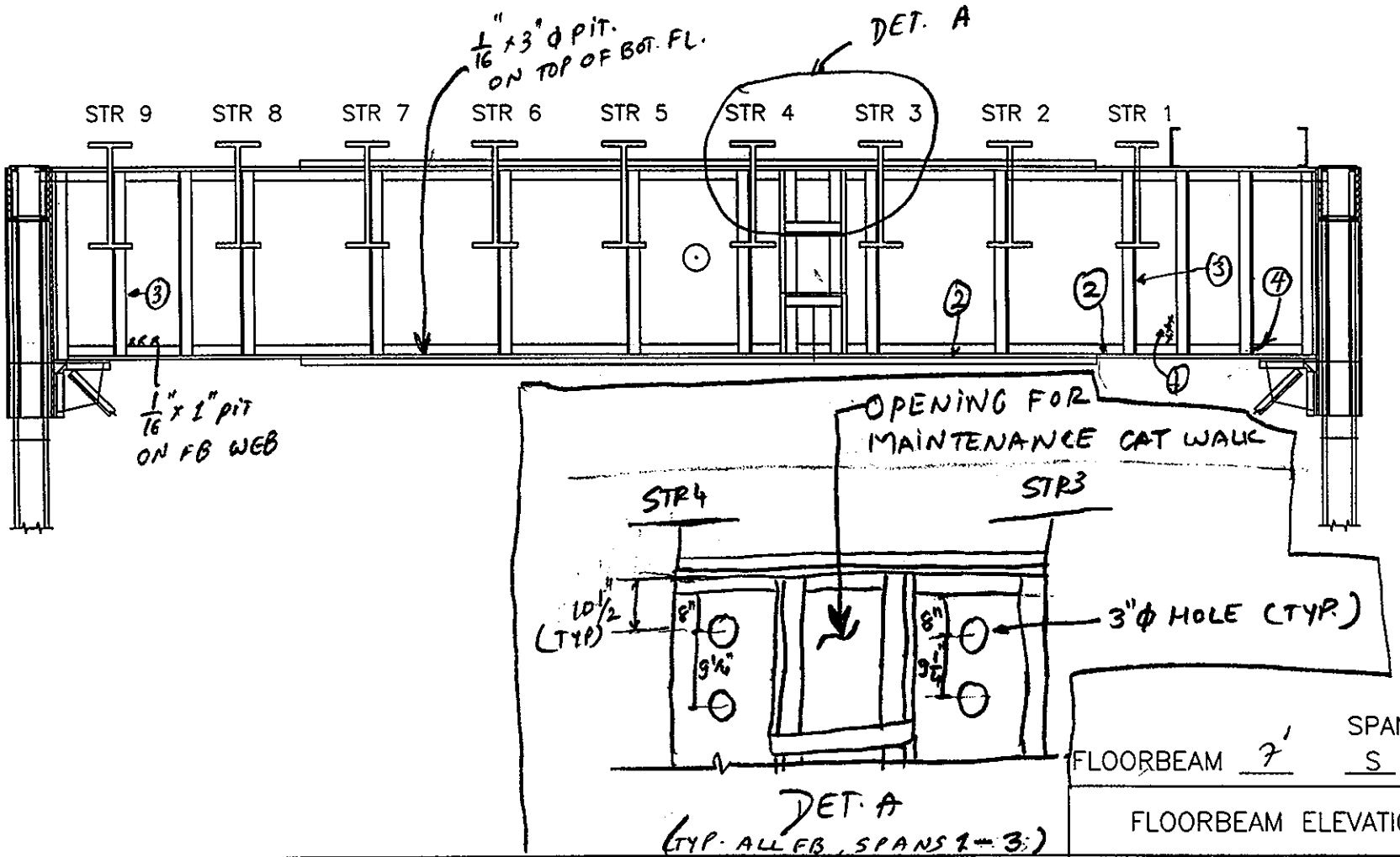

112
133

NOTES:

1. 1/16" x 3" HIGH PIT. ON FB WEB
2. 1/8" x 3" ϕ PIT ON TOP OF BOT. FL.
3. REPAIR R. WELDED TO STIFF. & OSL
4. 1"H x 2"W corrosion hole @ base of OSL — SP, SD 4/10/01

FLOORBEAM 7'	SPAN 2 S ELEV.
FLOORBEAM ELEVATION	EL
DEPARTMENT OF THE ARMY NEW ENGLAND DISTRICT CORPS OF ENGINEERS	
SAGAMORE HIGHWAY BRIDGE ROUTINE INSPECTION	
NOTES BY: LICHTENSTEIN CONSULTING ENGINEERS	
JOB #1986	DATE: 03/21/01
CREW: AP, EL	SHEET 6 OF 9

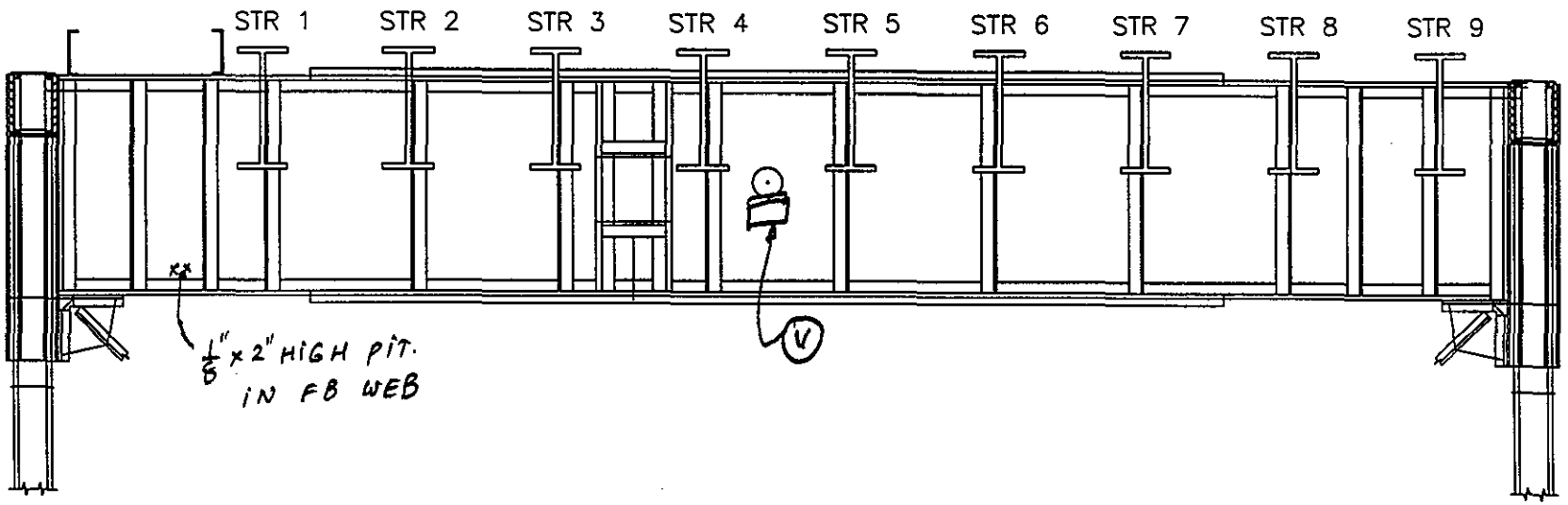

113
199

SPAN 2

FLOORBEAM 7'

N ELEV.

NOTES:

FLOORBEAM ELEVATION

EL

DEPARTMENT OF THE ARMY

NEW ENGLAND DISTRICT CORPS OF ENGINEERS

SAGAMORE HIGHWAY BRIDGE

ROUTINE INSPECTION

NOTES BY: LICHTENSTEIN

CONSULTING ENGINEERS

JOB #1986

DATE: 03/21/01

CREW: AP, EL

SHEET 5 OF 9

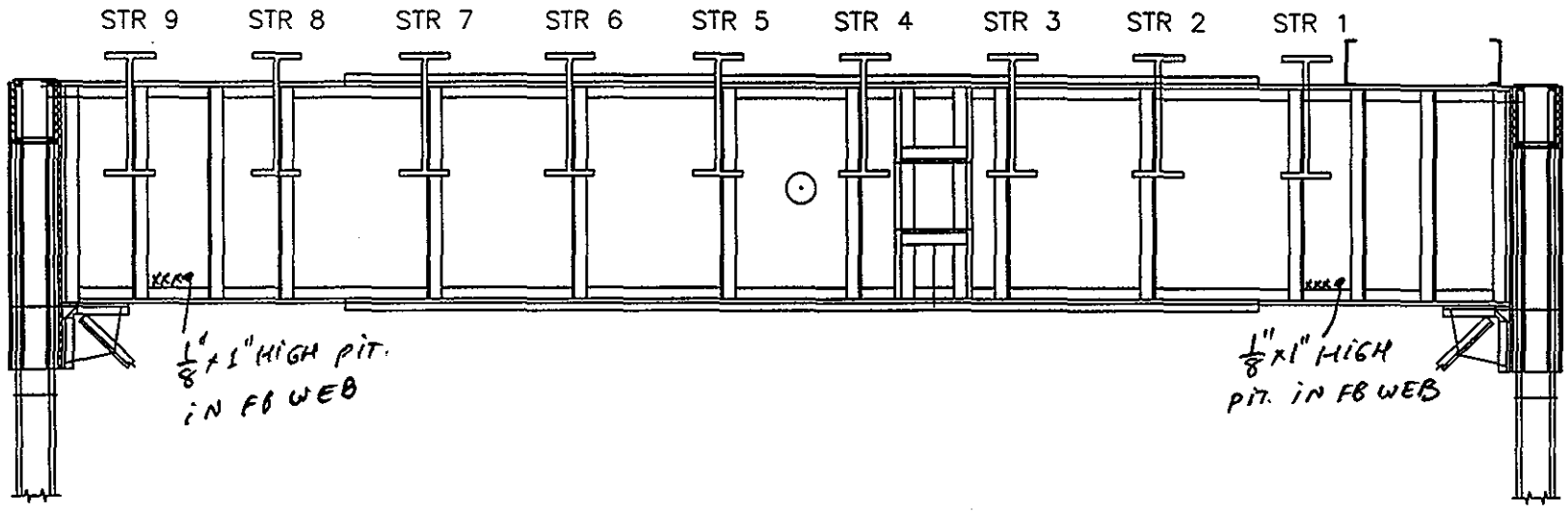

SPAN 2

FLOORBEAM 6' S ELEV.

NOTES:

FLOORBEAM ELEVATION EL

DEPARTMENT OF THE ARMY
NEW ENGLAND DISTRICT CORPS OF ENGINEERS

SAGAMORE HIGHWAY BRIDGE
ROUTINE INSPECTION

NOTES BY: LICHTENSTEIN
CONSULTING ENGINEERS

JOB #1986	DATE: 03/21/01
CREW: AP, EL	SHEET 4 OF 9

114
199

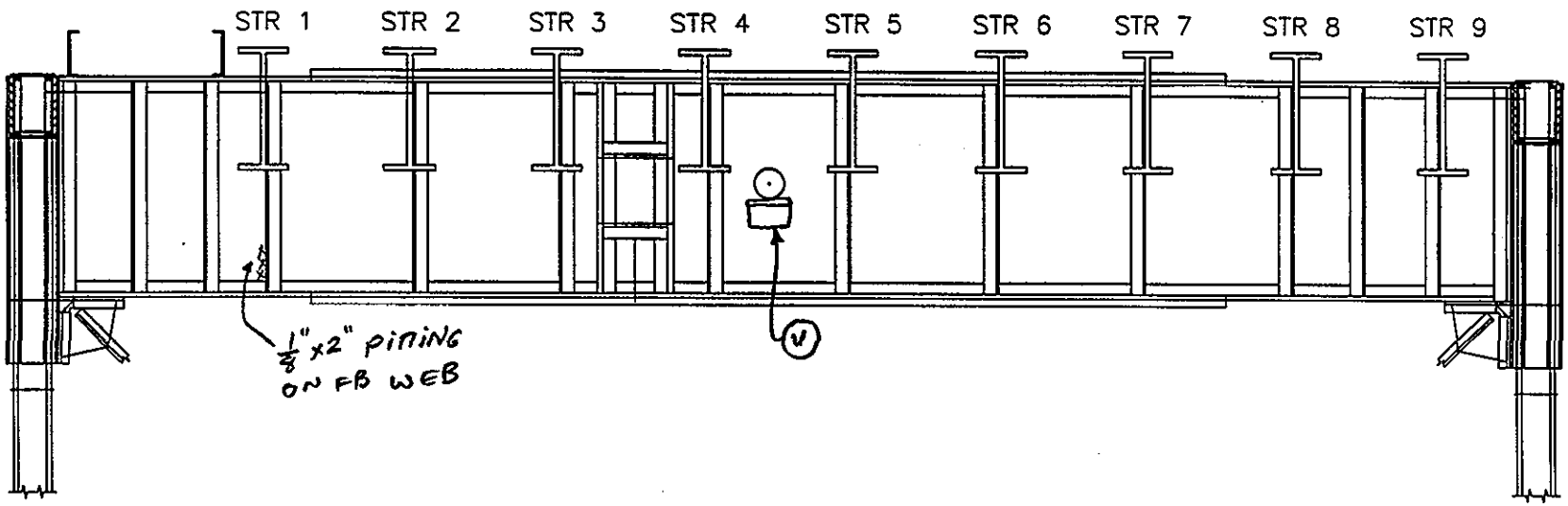

115
115

SPAN 2

FLOORBEAM 6' N ELEV.

NOTES:

FLOORBEAM ELEVATION EL

DEPARTMENT OF THE ARMY
NEW ENGLAND DISTRICT CORPS OF ENGINEERS

SAGAMORE HIGHWAY BRIDGE
ROUTINE INSPECTION

NOTES BY: LICHTENSTEIN
CONSULTING ENGINEERS

JOB #1986 DATE: 03/21/01

CREW: AP, EL SHEET 3 OF 9

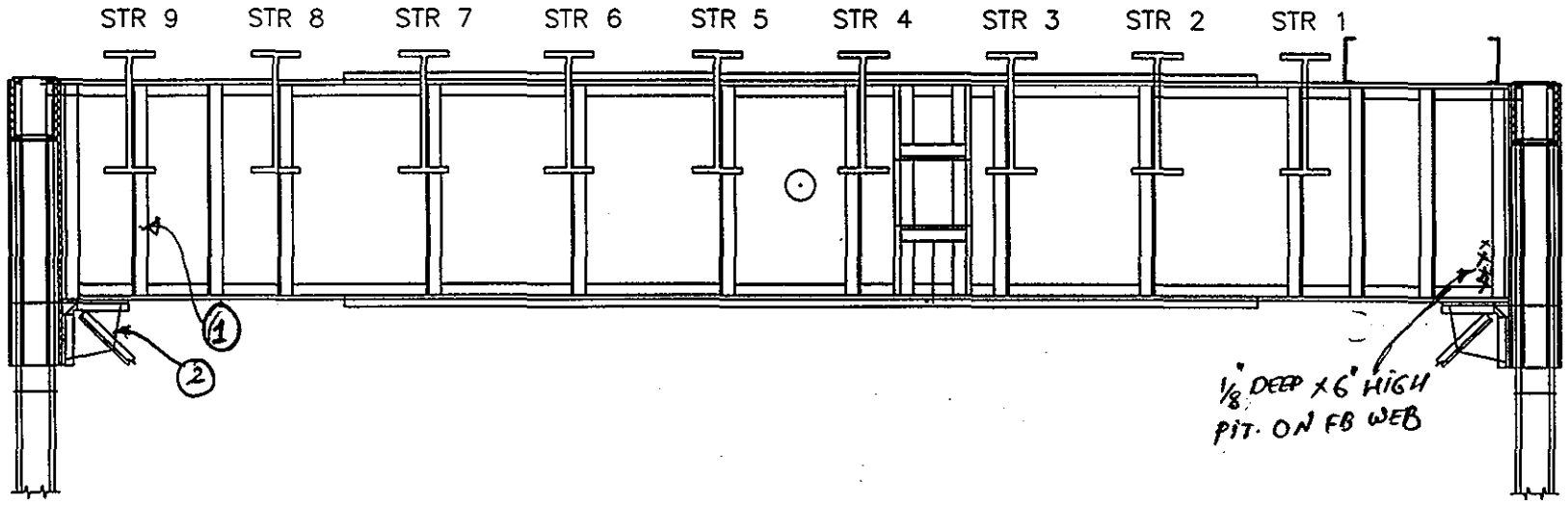

SPAN 2

FLOORBEAM 5' S ELEV.

NOTES: (1) REPAIR PL WELDED TO STIFF. & OSL.
(2) UP TO 1" IR BTWN BRACING & VERT. CONN. PL.

FLOORBEAM ELEVATION EL

DEPARTMENT OF THE ARMY
NEW ENGLAND DISTRICT CORPS OF ENGINEERS

SAGAMORE HIGHWAY BRIDGE
ROUTINE INSPECTION

NOTES BY: LICHTENSTEIN
CONSULTING ENGINEERS

JOB #1986 | DATE: 03/21/01

CREW: AP, EL | SHEET 1 OF 9

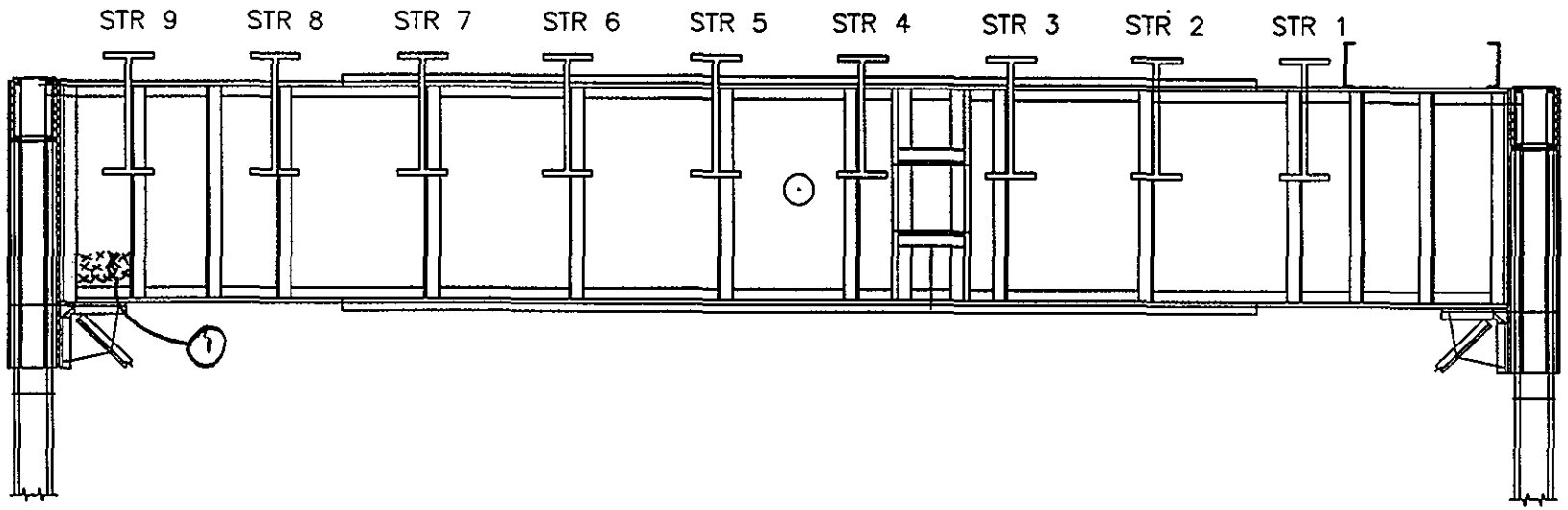

117
199

SPAN 2

FLOORBEAM 5' S ELEV.

NOTES:

1 '8" x 2" PITTING

FLOORBEAM ELEVATION EL

DEPARTMENT OF THE ARMY
NEW ENGLAND DISTRICT CORPS OF ENGINEERS

SAGAMORE HIGHWAY BRIDGE
ROUTINE INSPECTION

NOTES BY: LICHTENSTEIN
CONSULTING ENGINEERS

JOB #1986 DATE: 3-20-01

CREW: EL, SO, AP SHEET 4 OF 4

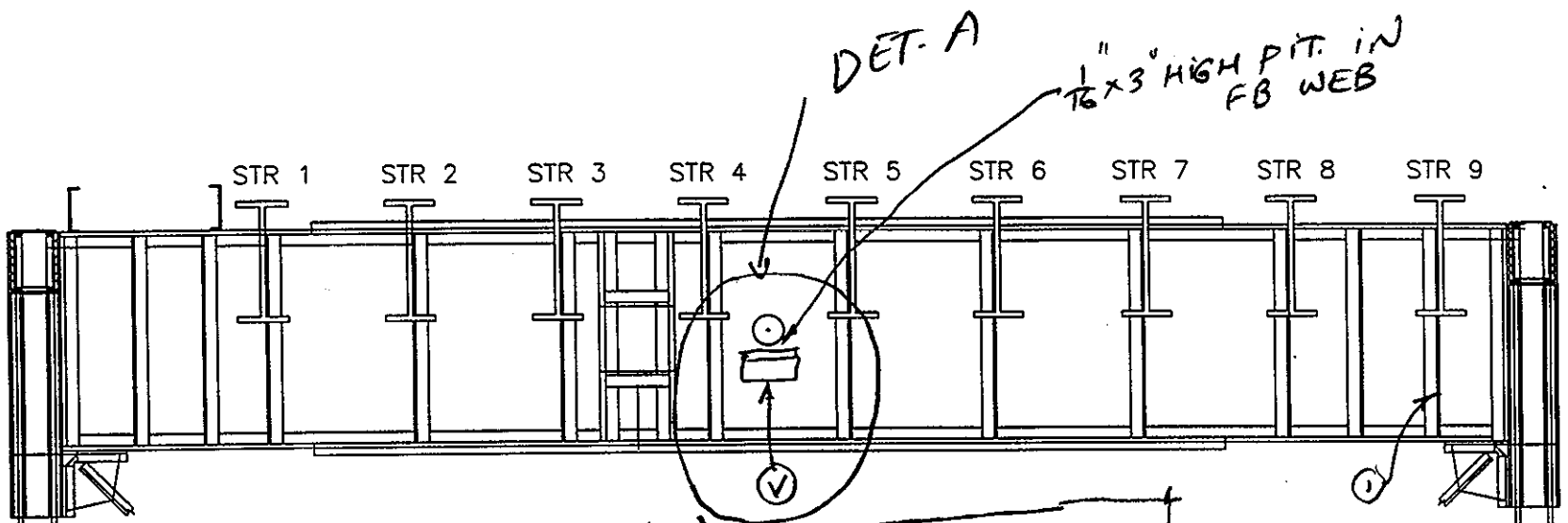

DET. A
TYPICAL ALL
FB (NORTH FACE)
SPAN 1 THR. 3
(EXCEPT FB0, SPAN 2 &
FB 0, SPAN 3).

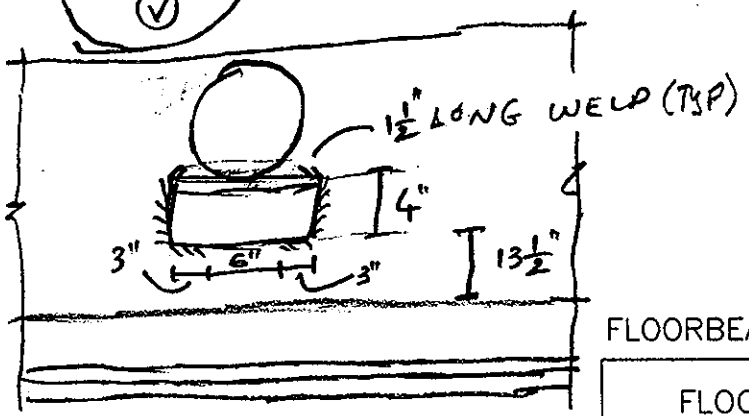

SPAN 2
FLOORBEAM 5'
N ELEV.

NOTES:
① RPR PL WELDED TO STIFF & OSL

FLOORBEAM ELEVATION EL

DEPARTMENT OF THE ARMY
NEW ENGLAND DISTRICT CORPS OF ENGINEERS

SAGAMORE HIGHWAY BRIDGE
ROUTINE INSPECTION

NOTES BY: LICHTENSTEIN
CONSULTING ENGINEERS

JOB #1986 | DATE: 3-23-01
CREW: EL, AP | SHEET 8 OF 8

118
199

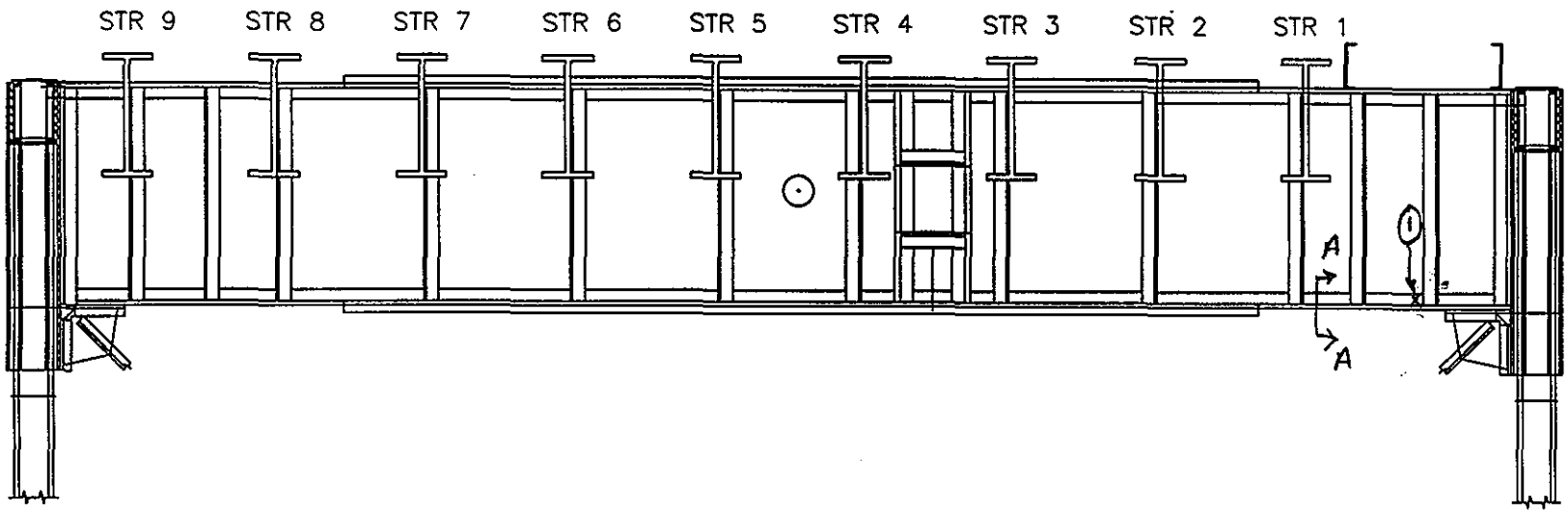

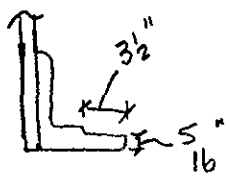

SECT A-A

SPAN 2

FLOORBEAM 4' S ELEV.

NOTES:

1 1/8" x 2" PITTING

FLOORBEAM ELEVATION EL

DEPARTMENT OF THE ARMY
NEW ENGLAND DISTRICT CORPS OF ENGINEERS

SAGAMORE HIGHWAY BRIDGE
ROUTINE INSPECTION

NOTES BY: LICHTENSTEIN
CONSULTING ENGINEERS

JOB #1986	DATE: 3·23·01
CREW: EL, AP	SHEET 7 OF 8

119
199

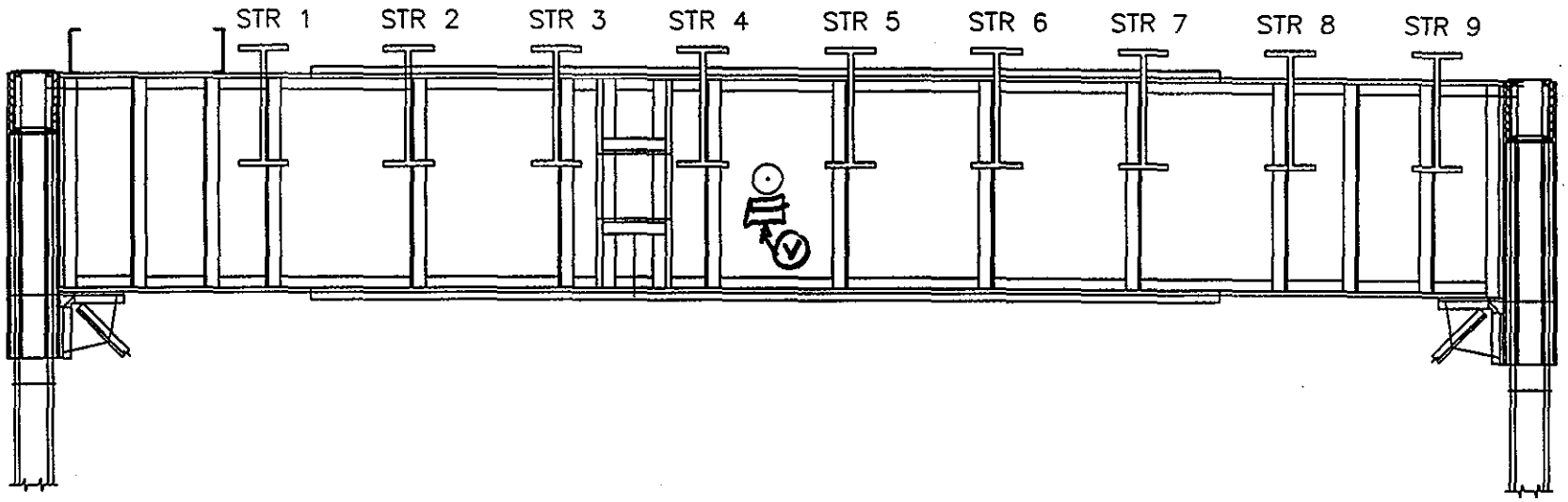

120
199

FLOORBEAM 4' SPAN 2
N ELEV.

NOTES:

FLOORBEAM ELEVATION EL

DEPARTMENT OF THE ARMY
NEW ENGLAND DISTRICT CORPS OF ENGINEERS

SAGAMORE HIGHWAY BRIDGE
ROUTINE INSPECTION

NOTES BY: LICHTENSTEIN
CONSULTING ENGINEERS

JOB #1986 DATE: 3·23·01
CREW: EL, AP SHEET 5 OF 8

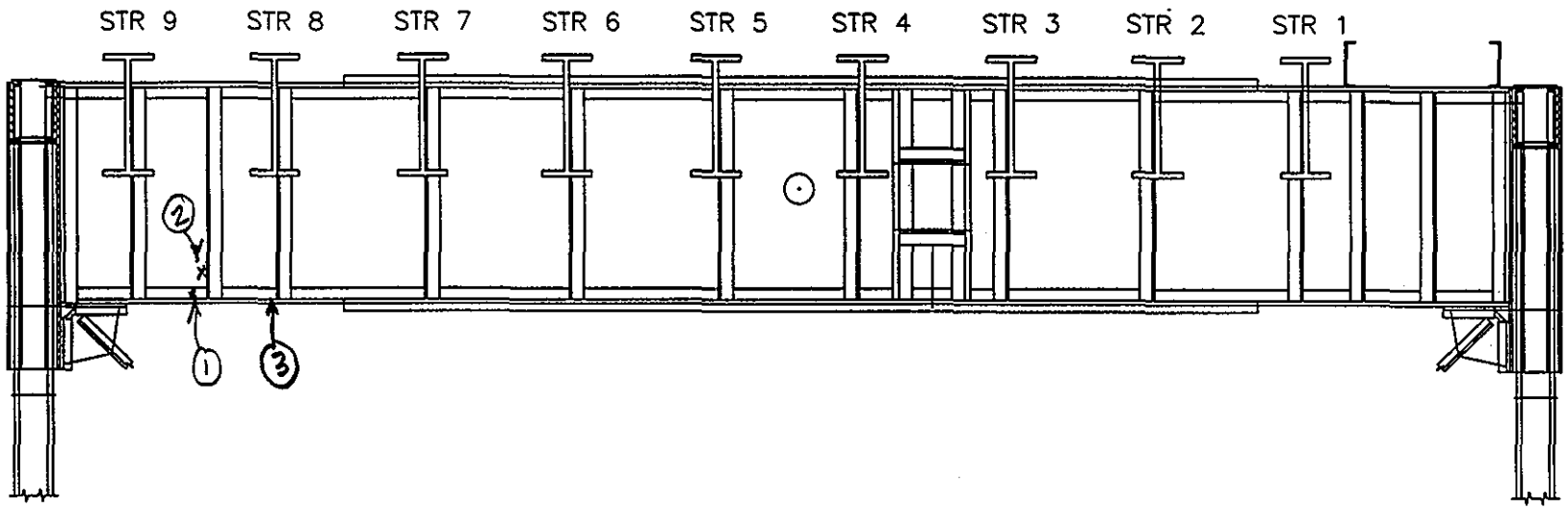

121
119

SPAN 2

FLOORBEAM 3' S ELEV.

NOTES:

1. 8" x 2" PITTING
2. 8" x 1" "
3. 16" x 4" " ON TOP OF BOT FL

FLOORBEAM ELEVATION EL

DEPARTMENT OF THE ARMY
NEW ENGLAND DISTRICT CORPS OF ENGINEERS

SAGAMORE HIGHWAY BRIDGE
ROUTINE INSPECTION

NOTES BY: LICHTENSTEIN
CONSULTING ENGINEERS

JOB #1986 DATE: 3·23·01

CREW: EL, AP SHEET 4 OF 8

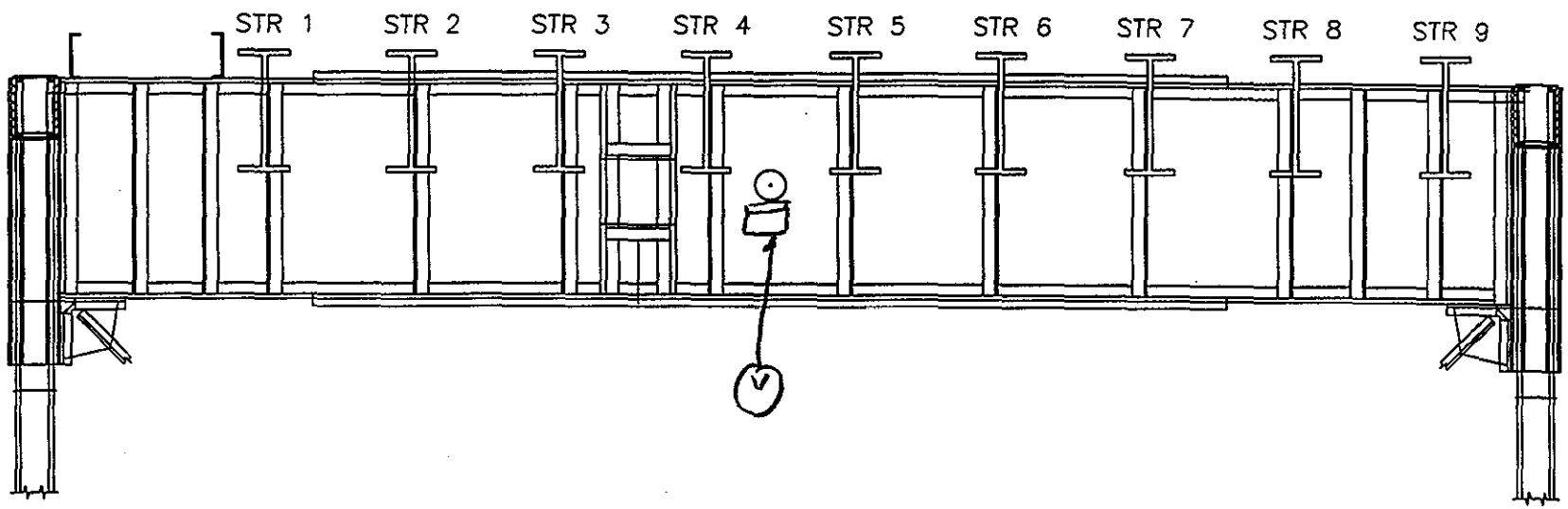

122
199

FLOORBEAM 3' SPAN 2
N ELEV.

NOTES:

FLOORBEAM ELEVATION EL

DEPARTMENT OF THE ARMY
NEW ENGLAND DISTRICT CORPS OF ENGINEERS

SAGAMORE HIGHWAY BRIDGE
ROUTINE INSPECTION

NOTES BY: LICHTENSTEIN
CONSULTING ENGINEERS

JOB #1986 DATE: 03/23/02
CREW: AP, EL SHEET 3 OF 8

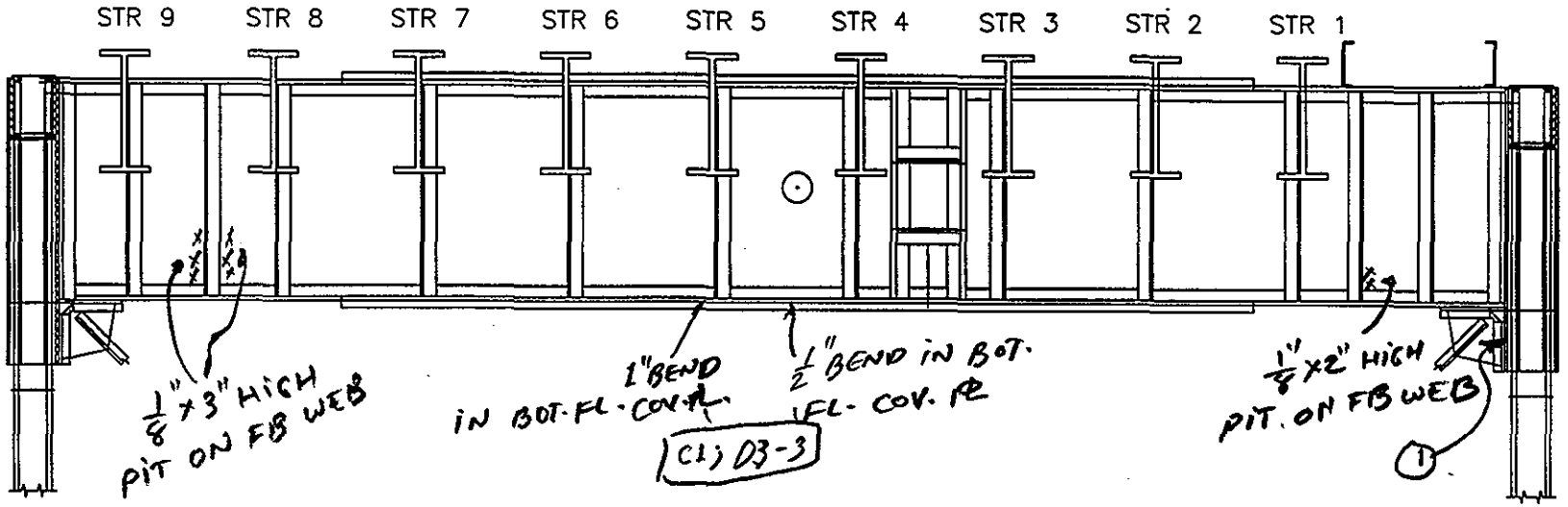

123
199

SPAN 2

FLOORBEAM 2' S ELEV.

NOTES:

① 1/8" PITTING ON VERT. GUSS PL FOR FULL LENGTH OF BOT FL CONN PL FOR FLOOR SYSTEM X-BRACE

FLOORBEAM ELEVATION EL	
DEPARTMENT OF THE ARMY NEW ENGLAND DISTRICT CORPS OF ENGINEERS	
SAGAMORE HIGHWAY BRIDGE ROUTINE INSPECTION	
NOTES BY: LICHTENSTEIN CONSULTING ENGINEERS	
JOB #1986	DATE: 03/23/01
CREW: AP, EL	SHEET 1 OF 8

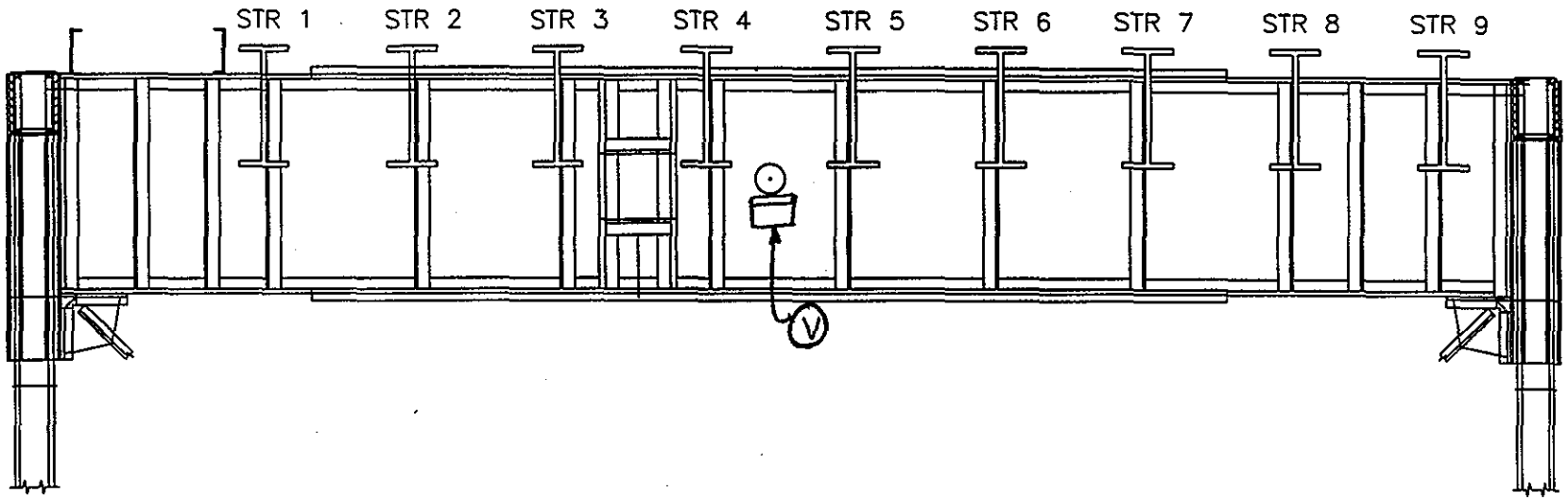

124
133

SPAN 2

FLOORBEAM 2' N ELEV.

NOTES:

FLOORBEAM ELEVATION EL

DEPARTMENT OF THE ARMY
NEW ENGLAND DISTRICT CORPS OF ENGINEERS

SAGAMORE HIGHWAY BRIDGE
ROUTINE INSPECTION

NOTES BY: LICHTENSTEIN
CONSULTING ENGINEERS

JOB #1986 | DATE: 03/19/01

CREW: AP, EL | SHEET 6 OF 6

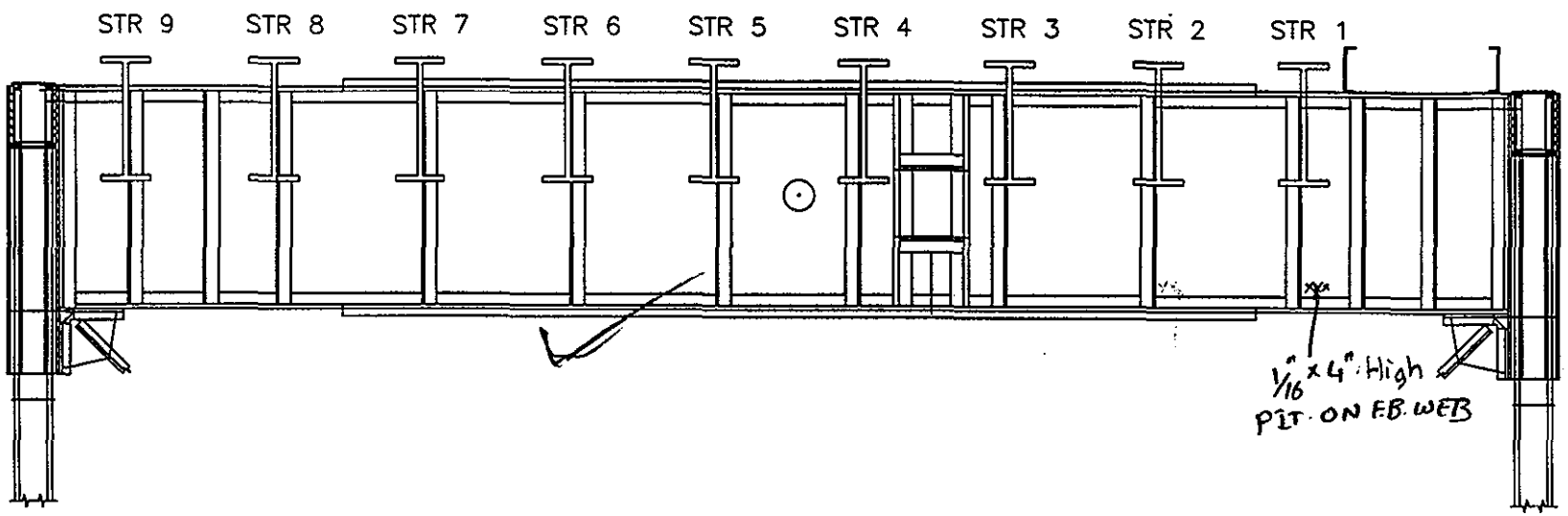

125
133

SPAN 2

FLOORBEAM 1' S ELEV.

NOTES:

FLOORBEAM ELEVATION EL

DEPARTMENT OF THE ARMY
NEW ENGLAND DISTRICT CORPS OF ENGINEERS

SAGAMORE HIGHWAY BRIDGE
ROUTINE INSPECTION

NOTES BY: LICHTENSTEIN
CONSULTING ENGINEERS

JOB #1986 DATE: 03/19/01

CREW: AP, EL SHEET 5 OF 6

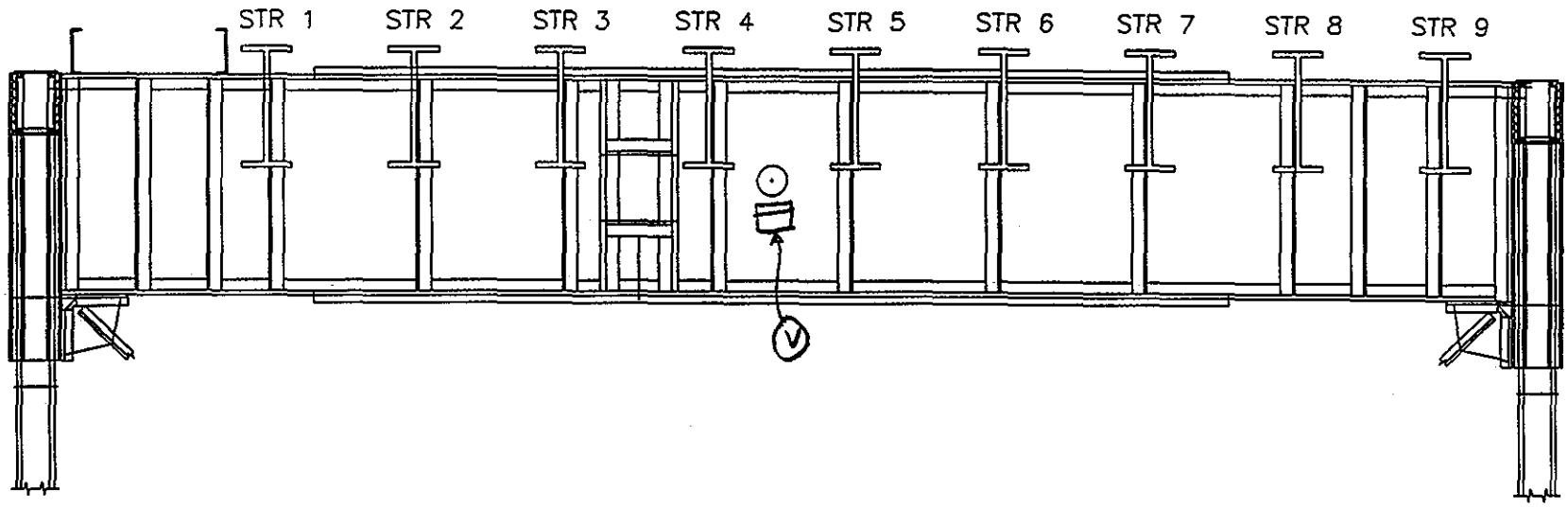

126
199

SPAN 2

FLOORBEAM 1' N ELEV.

NOTES:

FLOORBEAM ELEVATION EL

DEPARTMENT OF THE ARMY
NEW ENGLAND DISTRICT CORPS OF ENGINEERS

SAGAMORE HIGHWAY BRIDGE
ROUTINE INSPECTION

NOTES BY: LICHTENSTEIN
CONSULTING ENGINEERS

JOB #1986 | DATE: 03/19/01

CREW: AP, EL | SHEET 4 OF 6

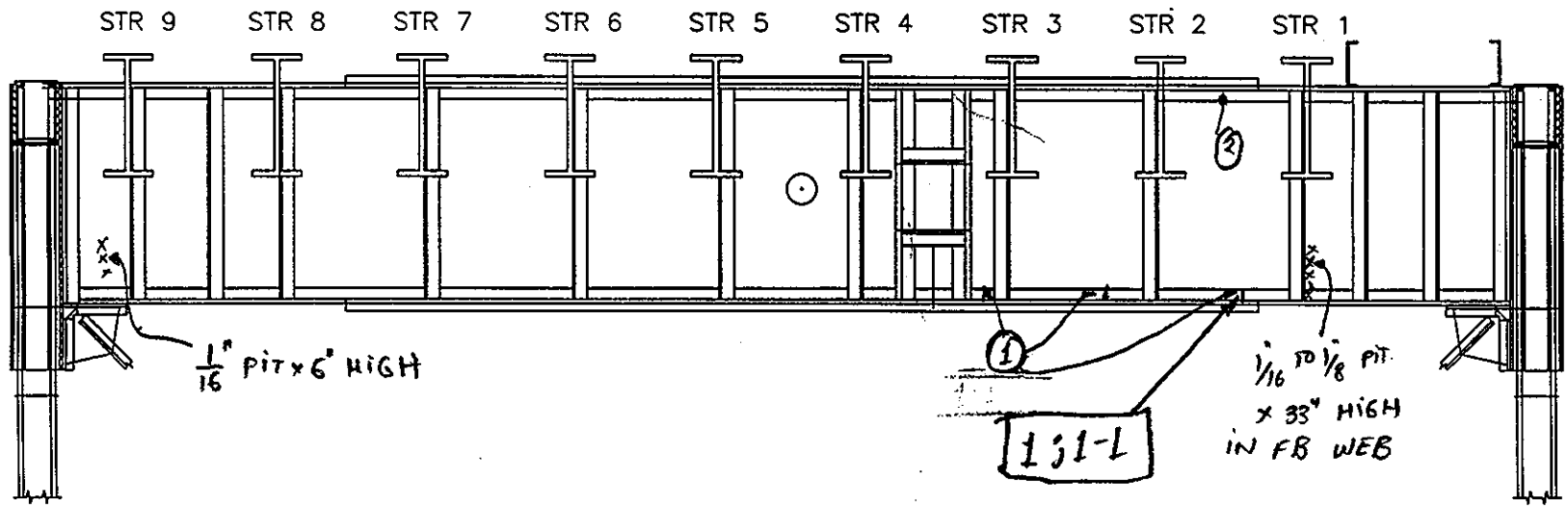

127
199

SPAN 2

FLOORBEAM 0' S ELEV.

NOTES:

1. STUB PL WELDED TO BOTTOM FL. ∠, 1/2" x 3" HIGH (PHOTO 1;1-1)
2. BLANK HOLES THAT MATCH THE PATTERN OF HOLES IN BOT. FL, FULL LENGTH

FLOORBEAM ELEVATION EL	
DEPARTMENT OF THE ARMY NEW ENGLAND DISTRICT CORPS OF ENGINEERS	
SAGAMORE HIGHWAY BRIDGE ROUTINE INSPECTION	
NOTES BY: LICHTENSTEIN CONSULTING ENGINEERS	
JOB #1986	DATE: 03/19/01
CREW: AP, EL	SHEET 2 OF 6

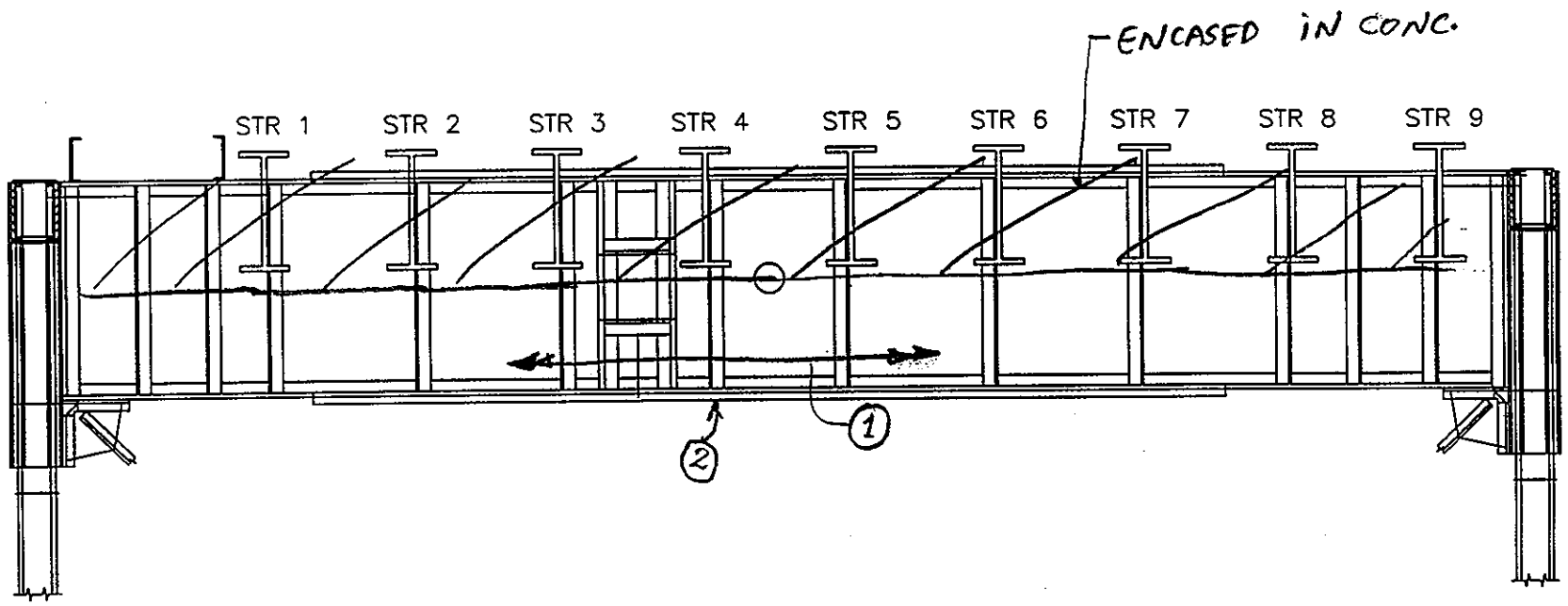

128
199

SPAN 2

FLOORBEAM 0'

N ELEV.

FLOORBEAM ELEVATION EL

NOTES:

1. STUB OF BURNED OFF PL. WELDED TO WEB FULL LENGTH
2. 1/8" LOSS ON EDGE OF COVER PL × 6" LONG

DEPARTMENT OF THE ARMY
NEW ENGLAND DISTRICT CORPS OF ENGINEERS

SAGAMORE HIGHWAY BRIDGE
ROUTINE INSPECTION

NOTES BY: LICHTENSTEIN
CONSULTING ENGINEERS

JOB #1986	DATE: 03/19/01
CREW: AP, EL	SHEET 1 OF 6

III. BEARINGS

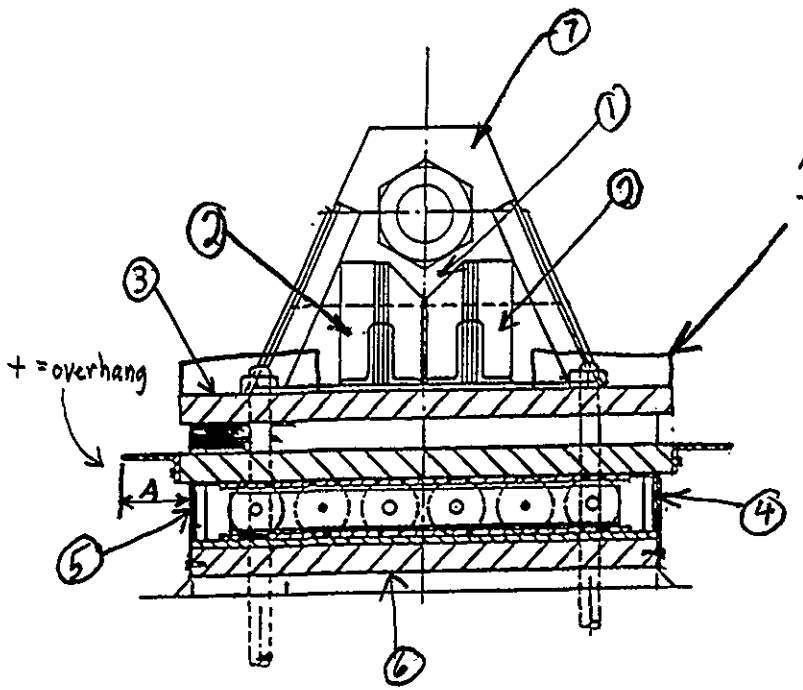

E ELEV.

C2-D22-4

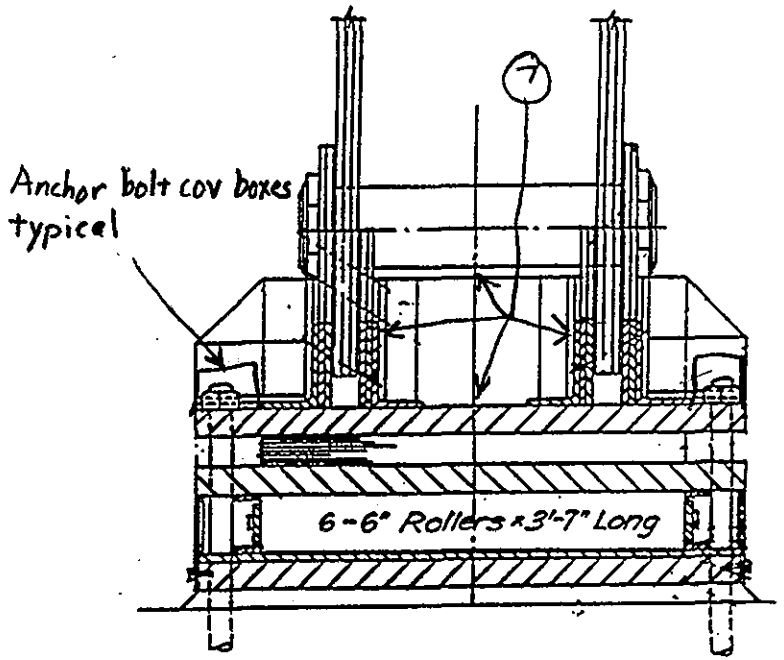

S ELEV.

129
1.97

LOCATION	A
NE	2¾"
NW	2 1/16"
SE	6½"
SW	6½"

T= 47 °F
IN SHADE/SUN

W BEARING

S ABUT. SPAN 3

NOTES:
1. Center cavity filled w/ protective foam
2. Cavity not filled w/ protective foam
3. 5" cracked weld at bot of anchor bolt cover box, SE box
4. Missing bolt at NE corner
5. 2 missing bolts at SE side and SW side
6. 2 bolts missing at bot of E elev
7. Lt. to medium rust on all surfaces

BEARINGS EL

DEPARTMENT OF THE ARMY
NEW ENGLAND DISTRICT CORPS OF ENGINEERS

SAGAMORE HIGHWAY BRIDGE
ROUTINE INSPECTION

NOTES BY: LICHTENSTEIN
CONSULTING ENGINEERS

JOB #1986 | DATE: 4/10/01
CREW: SP, SD | SHEET 3 OF 4

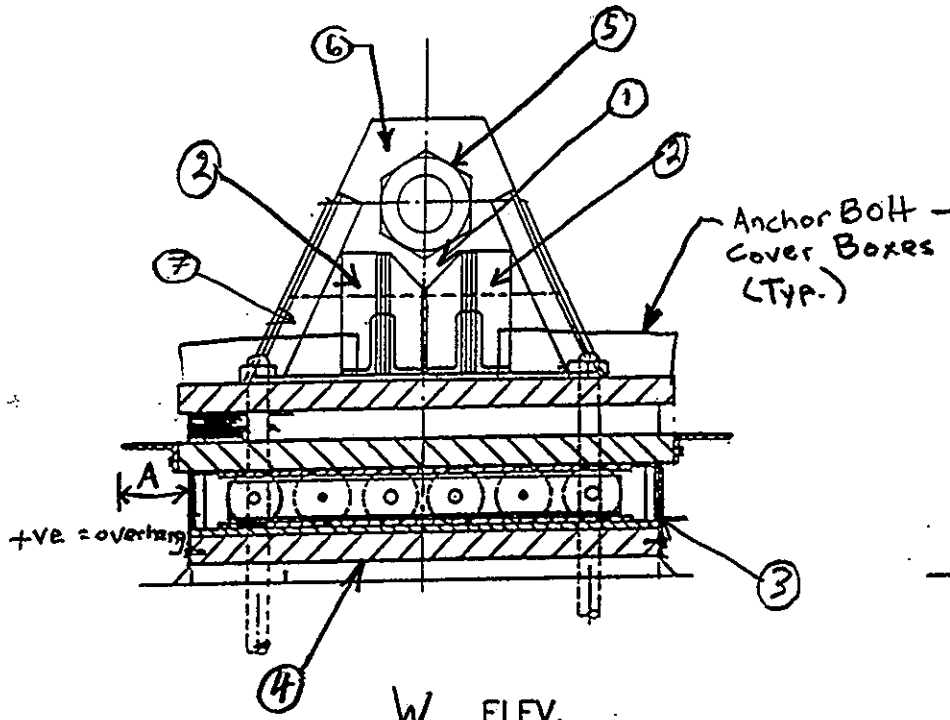

W ELEV.

C2-D22-3

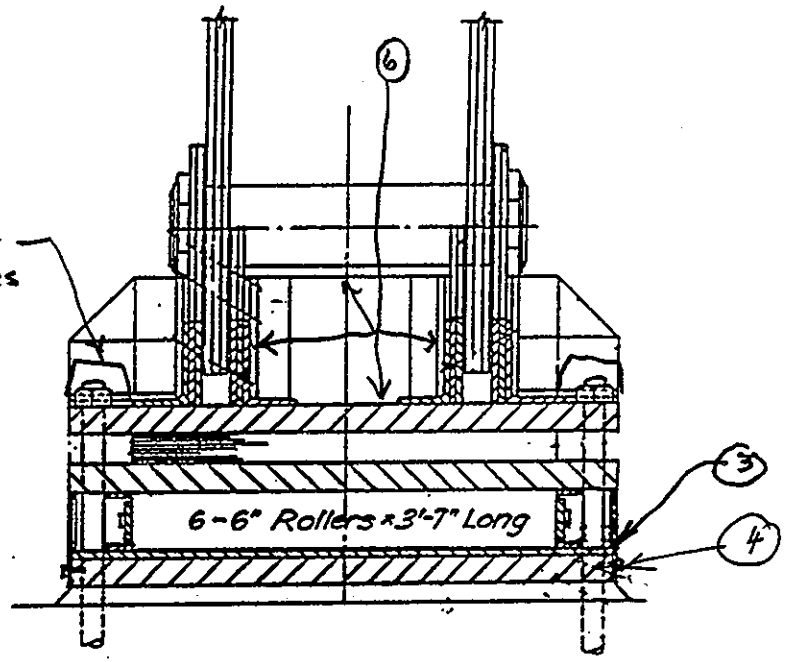

S ELEV.

130
193

LOCATION	A
NE	2½"
NW	3"
SE	6 9/16"
SW	6¼"

T= 47 °F
IN SHADE/SUN

E BEARING

S ABUT. SPAN 3

NOTES:
1. center cavity filled w/ protective foam
2. cavity not filled w/ protective foam
3. 1 bolt missing at each of the four corners.
4. 1 bolt missing at bot of E elev.
5. Up to 3/16" pit on 5 of 6 edges of pin nut
6. Typ. cond. lt. rust on all surfaces
7. 2 rivet heads w/ 50% section loss

BEARINGS EL

DEPARTMENT OF THE ARMY
NEW ENGLAND DISTRICT CORPS OF ENGINEERS

SAGAMORE HIGHWAY BRIDGE
ROUTINE INSPECTION

NOTES BY: LICHTENSTEIN
CONSULTING ENGINEERS

JOB #1986 | DATE: 4/10/01
CREW: SP, SD | SHEET 4 OF 4

* Signs of movement under general live load.

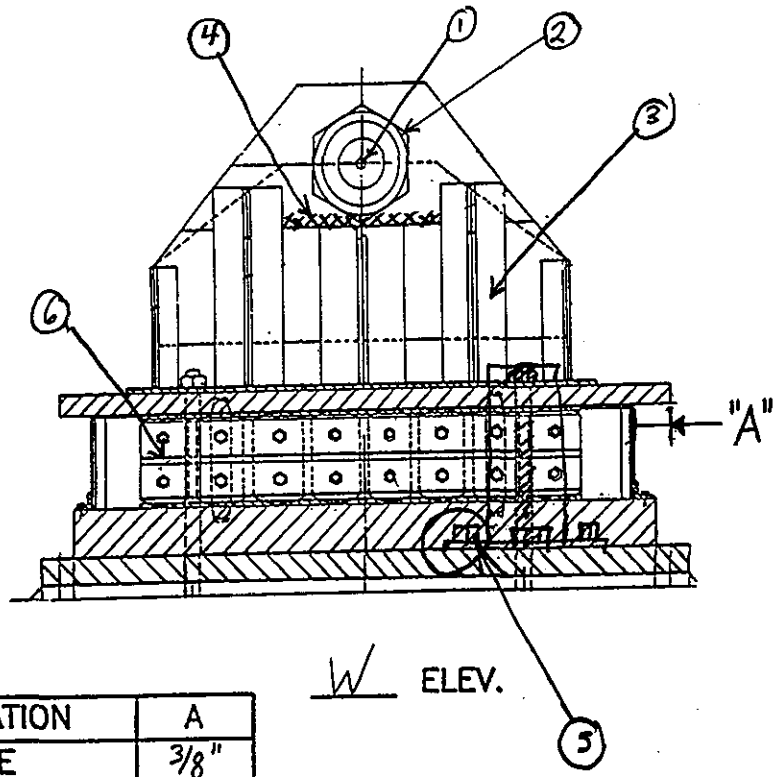

W ELEV.

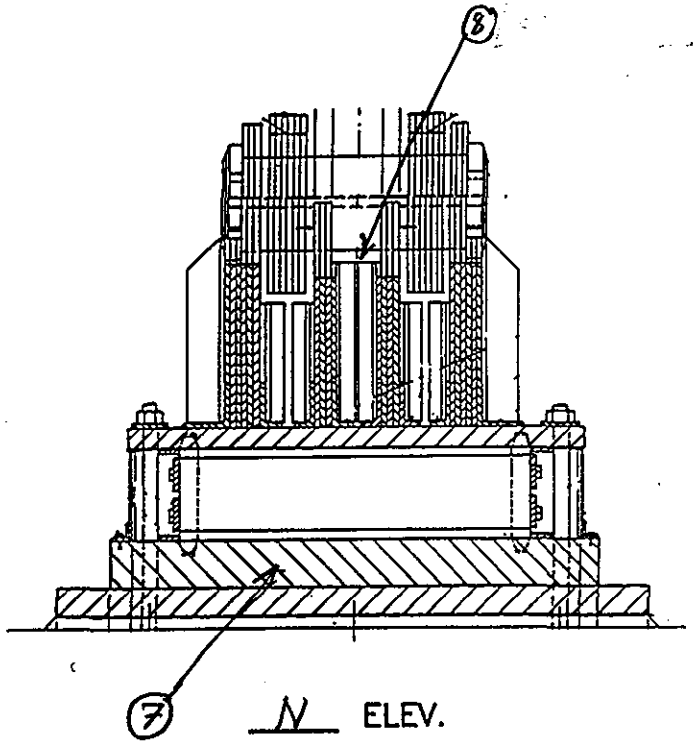

N ELEV.

131
199

LOCATION	A
NE	3/8"
NW	3/8"
SE	2 1/4"
SW	2 1/4"

T= 54 °F
SHADE / SUN

NOTES:
1. 30% section loss on pin nut
2. 1/16" pit in vert P and 3/8" IR bet vert P and pin P from 1:00 to 9:00.
3. 16 thru bolts w/ up to 10% loss typical on nut E&W
4. 1/16"x2" H pit
5. 1 secondary anchor bolt loose, SW; 2 NW; 1 NE
6. 2 bolts missing on roller cov P
7. 1 bolt missing, 1 bolt loose on roller cover P
8. Debris and water accumulation in pin cavity C2-D20-2 N&S

W BEARING

1 PIER SPAN 1/3

BEARINGS EL

DEPARTMENT OF THE ARMY
NEW ENGLAND DISTRICT CORPS OF ENGINEERS

SAGAMORE HIGHWAY BRIDGE
ROUTINE INSPECTION

NOTES BY: LICHTENSTEIN
CONSULTING ENGINEERS

JOB #1986 DATE: 4/9/01
CREW: SP, EL SHEET 1 OF 10

• Signs of movement evident under live load.

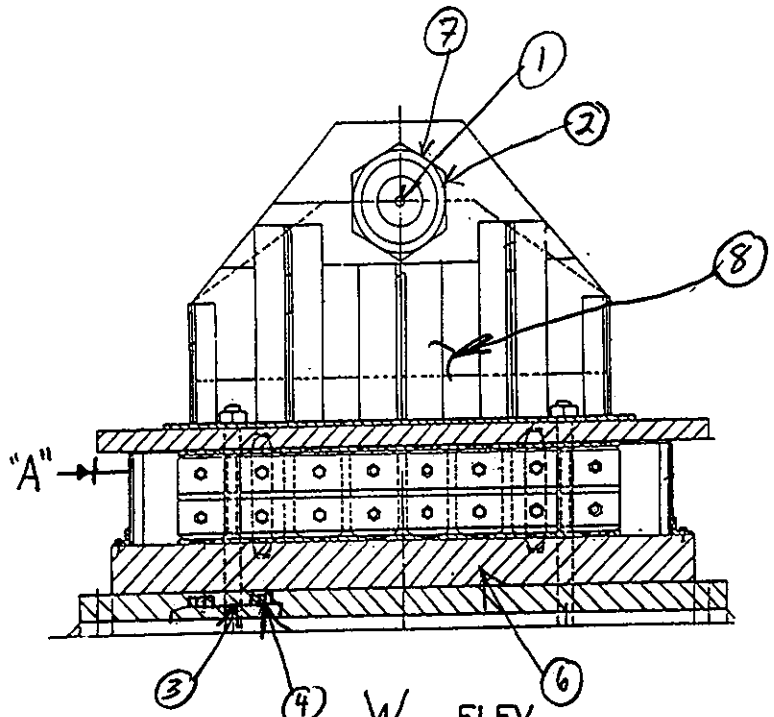

W ELEV.

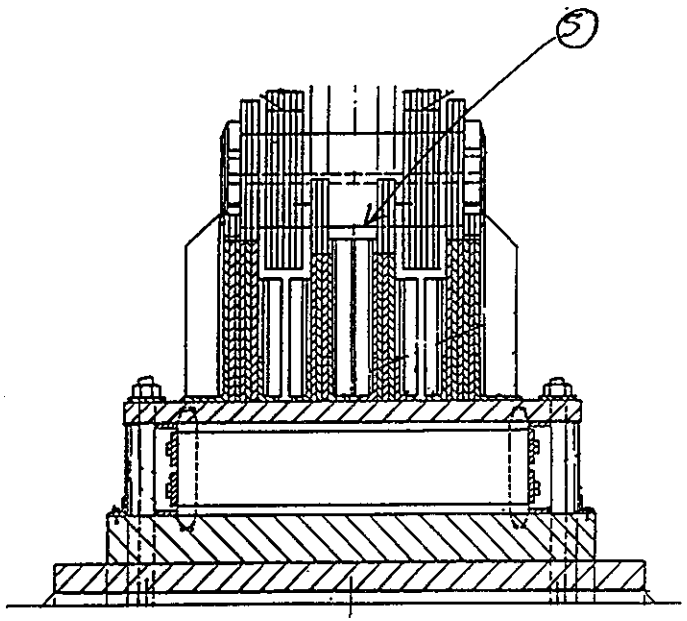

S ELEV.

132
139

LOCATION	A
NE	0"
NW	0"
SE	2 3/8"
SW	2 3/8"

T= 54 °F
IN SHADE/SUN

E BEARING

1 PIER SPAN 1/3

NOTES: (1) 50% section loss on W pin nut [C2-D20-3]; 15% E nut
(2) Gap bet pin PL & vert PL from 1:00 to 10:00 up to 3/8" W side, 4:00 to 10:00 1/4" E side
(3) Primary anchor bolt 3/8" neg. thread NW, NE, SE, SW
(4) 1 Secondary anchor bolt loose SE, SW
(5) Water ponding and debris accumulation in pin cavity N&S
(6) 2 missing bolts W side; E side; N side w/ 2 loose and 1 bolt missing
(7) 1/16" x 1/2" H x 8" L pit on vert. PL
(8) 1/16" x 1/2" x 75% circumference (avg.) pit in vert PL at 7 of 16 thru bolt locations [D2-D20-4]

BEARINGS EL

DEPARTMENT OF THE ARMY
NEW ENGLAND DISTRICT CORPS OF ENGINEERS

SAGAMORE HIGHWAY BRIDGE
ROUTINE INSPECTION

NOTES BY: LICHTENSTEIN
CONSULTING ENGINEERS

JOB #1986 DATE: 4/9/01
CREW: SP, EL SHEET 3 OF 10

• All anchor bolts sound when struck by hammer.

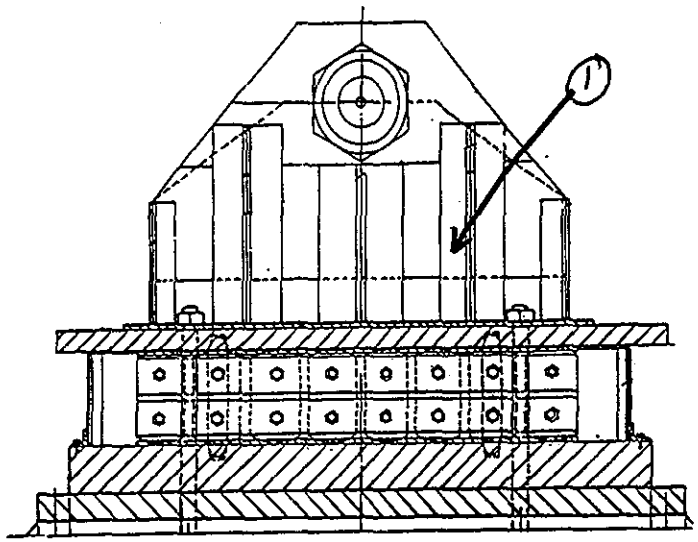

E ELEV.

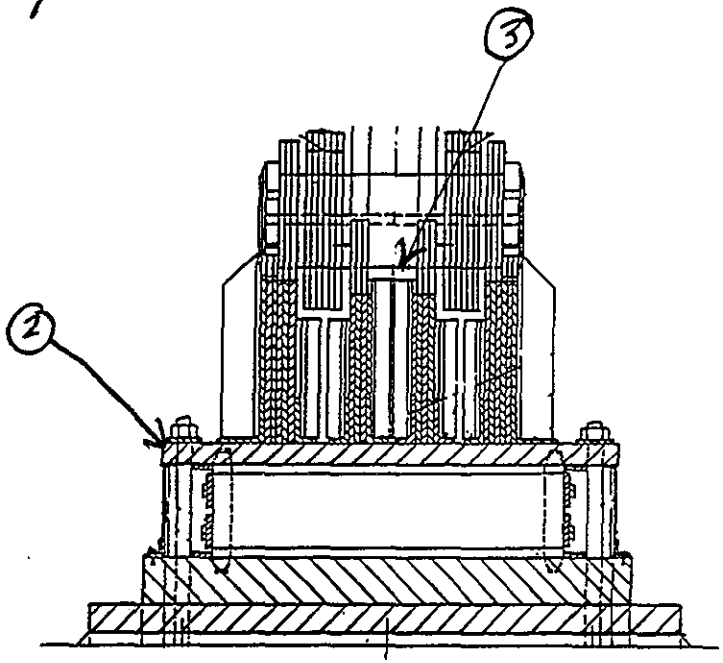

N ELEV.

133
199

LOCATION	A
NE	X
NW	X
SE	X
SW	X

T= 54° °F
SHADE/SUN

C2:D21-6

Fixed Bearing

W BEARING

2 PIER SPAN 1/2

NOTES: ① Avg. 10% sect. loss on thru bolt nut 10 of 16 locations; 3 of 16 W face
② 50% sect. loss of paint protective sheathing E face
③ Water ponding and debris accumulation in pin cavity N and S

BEARINGS EL

DEPARTMENT OF THE ARMY
NEW ENGLAND DISTRICT CORPS OF ENGINEERS

SAGAMORE HIGHWAY BRIDGE
ROUTINE INSPECTION

NOTES BY: LICHTENSTEIN
CONSULTING ENGINEERS

JOB #1986 DATE: 4/9/01
CREW: SB,EL SHEET 5 OF 10

• All anchor bolts sound when struck by hammer.

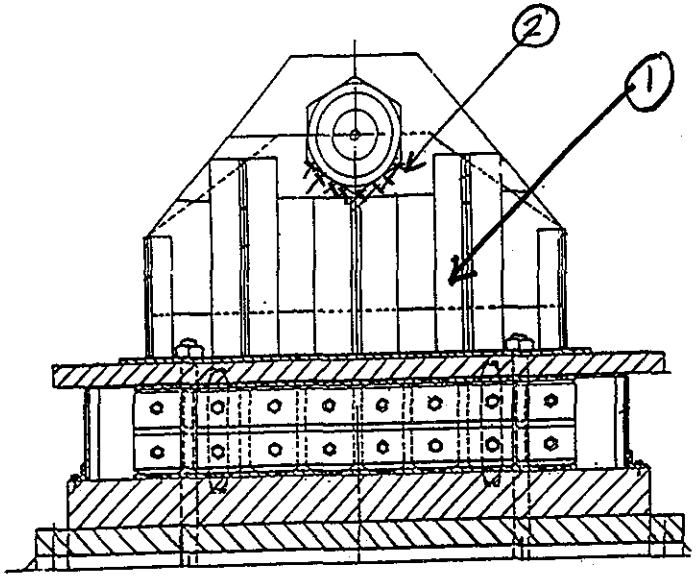

W ELEV.

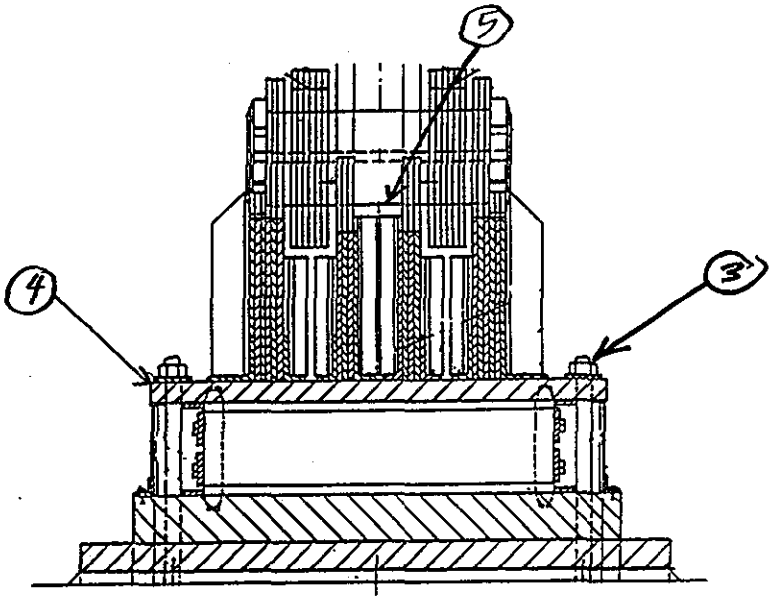

N ELEV.

134
193

LOCATION	A
NE	X
NW	X
SE	X
SW	X

Fixed Bearing

E BEARING

2 PIER SPAN 2/1

T= 54 °F
SHADE/SUN

NOTES: (1) Avg. 10% section loss of nut on thru bolt 16 locations, E & W.
(2) 1/16" pit x 1/2" w
(3) 3/8" neg. thread on NE, NW, and SE
(4) 75% loss of horiz portion of protective sheathing all four faces
C2-D21-5
(5) Debris and water accumulation in pin cavity N and S.

BEARINGS EL

DEPARTMENT OF THE ARMY
NEW ENGLAND DISTRICT CORPS OF ENGINEERS

SAGAMORE HIGHWAY BRIDGE
ROUTINE INSPECTION

NOTES BY: LICHTENSTEIN
CONSULTING ENGINEERS

JOB #1986 DATE: 4/9/01
CREW: SP, EL SHEET 4 OF 10

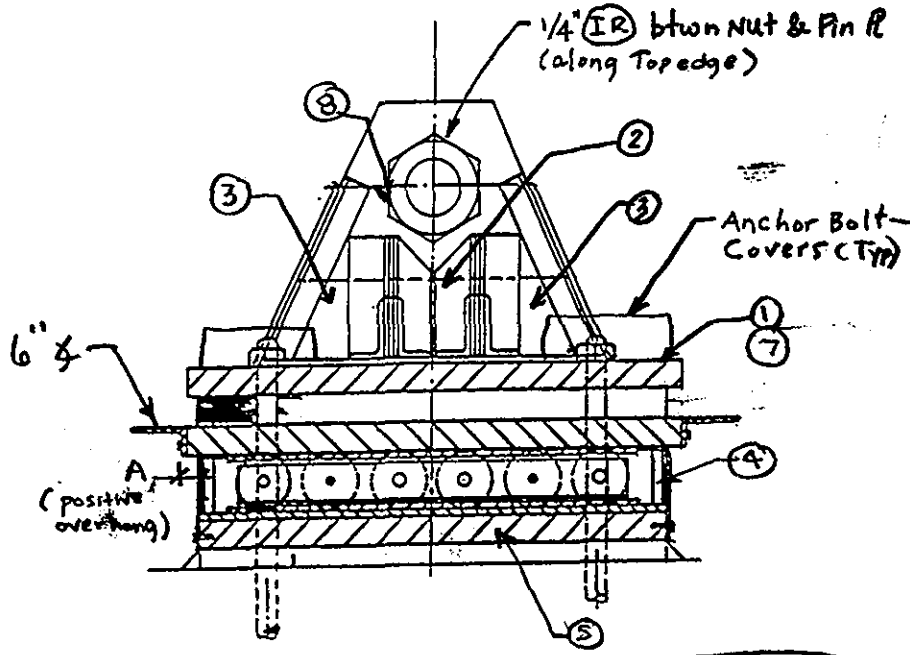

W ELEV.

East Elev.
C1-D12-1

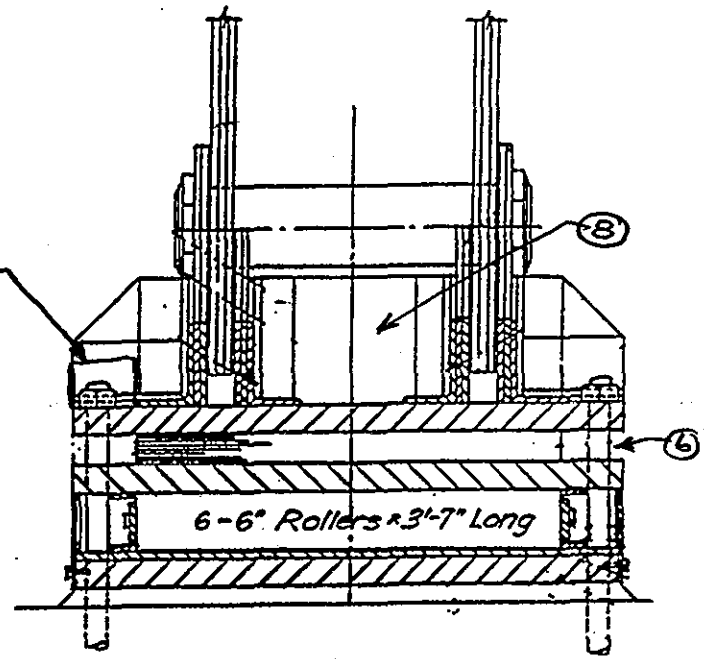

N ELEV.

C1-D12-2

LOCATION	A
NE	−2¾"
NW	−2¾"
SE	0"
SW	+⅛"

Movement under LL noted

W BEARING

N ABUT. SPAN 2

T= 54 °F
IN SHADE/(SUN)

NOTES:
1. SE Anchor bolt Cover box has 1 bolt missing @ NE Corner & Not Attached along west edge
2. Center Cavity Filled w/ Protective foam
3. Cavity not filled w/ Protective foam
4. 3 Bolts Missing @ SE Corner Edge (3 of 3)
5. 1 bolt missing from east & West Elev. along bottom Edge (1 of 16)
6. 3"L x 2"H Sect. of Protective foam missing. (Anchor Bolt visible & Hvy rust & Section Loss noted on AB,) @ SE Corner.
7. SE AB Nut Visible. Hvy Rust w/ sect Loss Noted.
8. Typ. Cond. - Lt-med rust on Interior Surfaces

BEARINGS EL

DEPARTMENT OF THE ARMY
NEW ENGLAND DISTRICT CORPS OF ENGINEERS

SAGAMORE HIGHWAY BRIDGE
ROUTINE INSPECTION

NOTES BY: LICHTENSTEIN
CONSULTING ENGINEERS

JOB #1986 | DATE: 4/9/01
CREW: SD | SHEET 13 OF 14

185
139

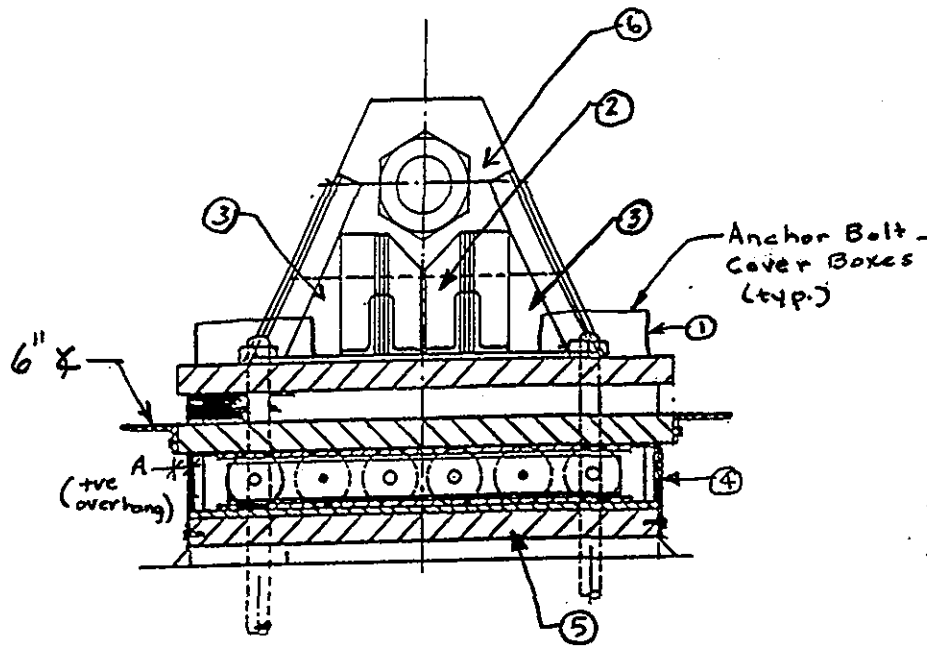

W ELEV.

C1-D12-5

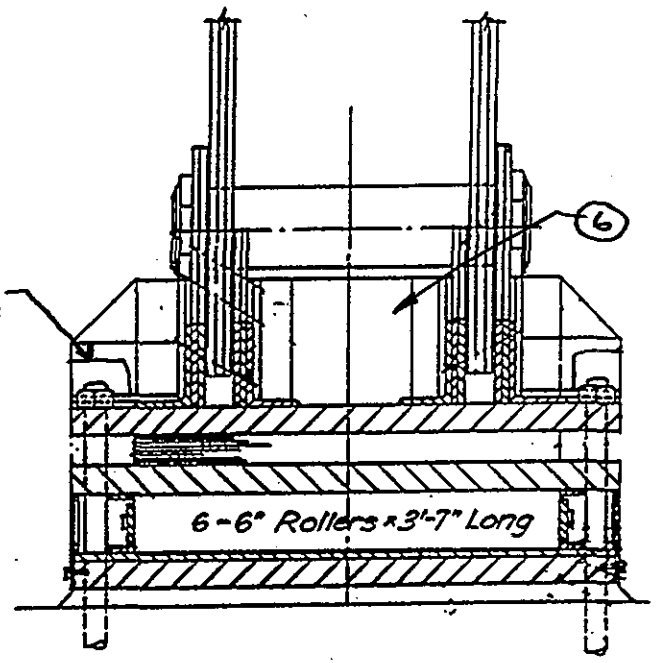

N ELEV.

LOCATION	A
NE	-3 1/8"
NW	-3 3/4"
SE	+1/2"
SW	+1"

Movement Noted under LL.

E BEARING

N ABUT. SPAN 2

T= 54 °F
IN SHADE/SUN

NOTES:
1. NW & SW Anchor Bolt Boxes Not Connected (resting in Place) C1-D12-3 C1-D12-4
2. Center Cavity filled w/ Protective foam
3. Cavity not filled w/ Protective foam
4. 1 bolt missing from SE & SW Corners (1 of 3)
5. 1 bolt missing from West Elev. @ bottom edge (1 of 16)
6. Typ. Cond. - Light-med Rust on Int. Surfaces.

BEARINGS EL

DEPARTMENT OF THE ARMY
NEW ENGLAND DISTRICT CORPS OF ENGINEERS

SAGAMORE HIGHWAY BRIDGE
ROUTINE INSPECTION

NOTES BY: LICHTENSTEIN
CONSULTING ENGINEERS

JOB #1986 DATE: 4/9/01
CREW: SD SHEET 14 OF 14

IV. SUBSTRUCTURE

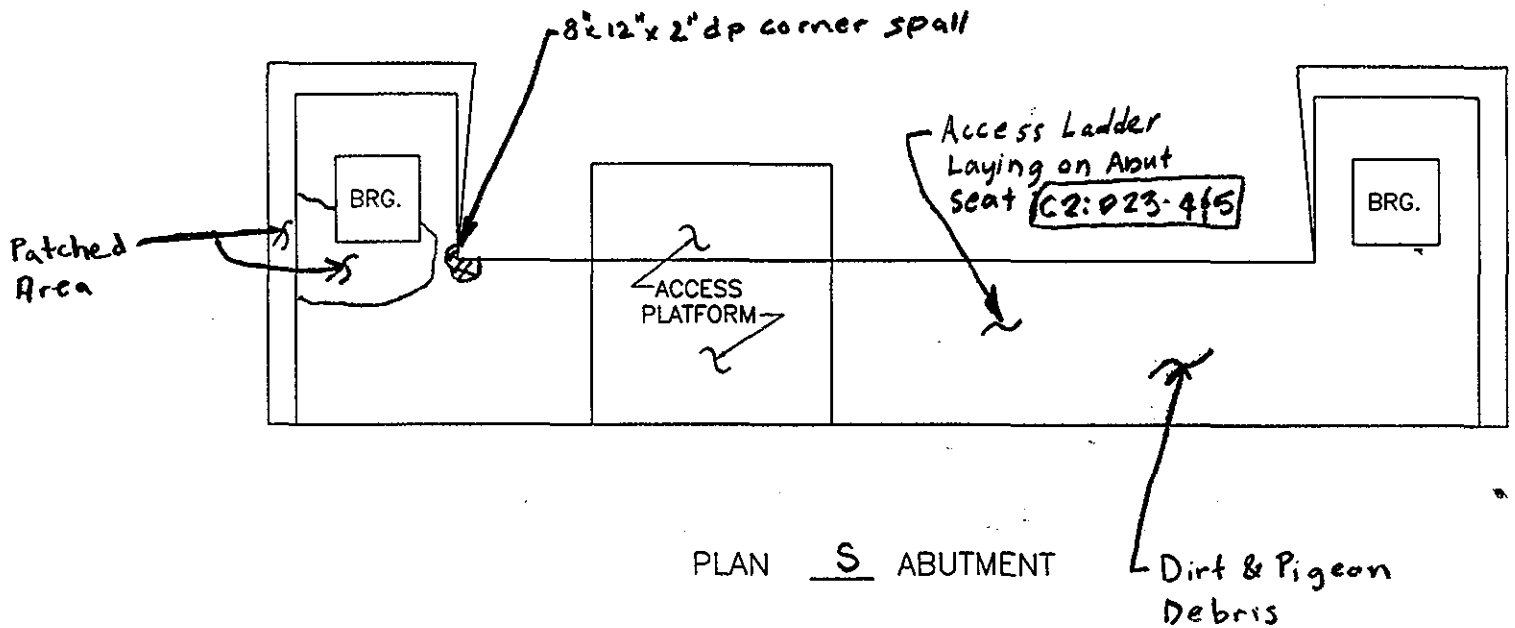

PLAN S ABUTMENT

NOTES:

SUBSTRUCTURE EL	
DEPARTMENT OF THE ARMY NEW ENGLAND DISTRICT CORPS OF ENGINEERS	
SAGAMORE HIGHWAY BRIDGE ROUTINE INSPECTION	
NOTES BY: LICHTENSTEIN CONSULTING ENGINEERS	
JOB #1986	DATE: 4/19/01
CREW: SD	SHEET 1 OF 2

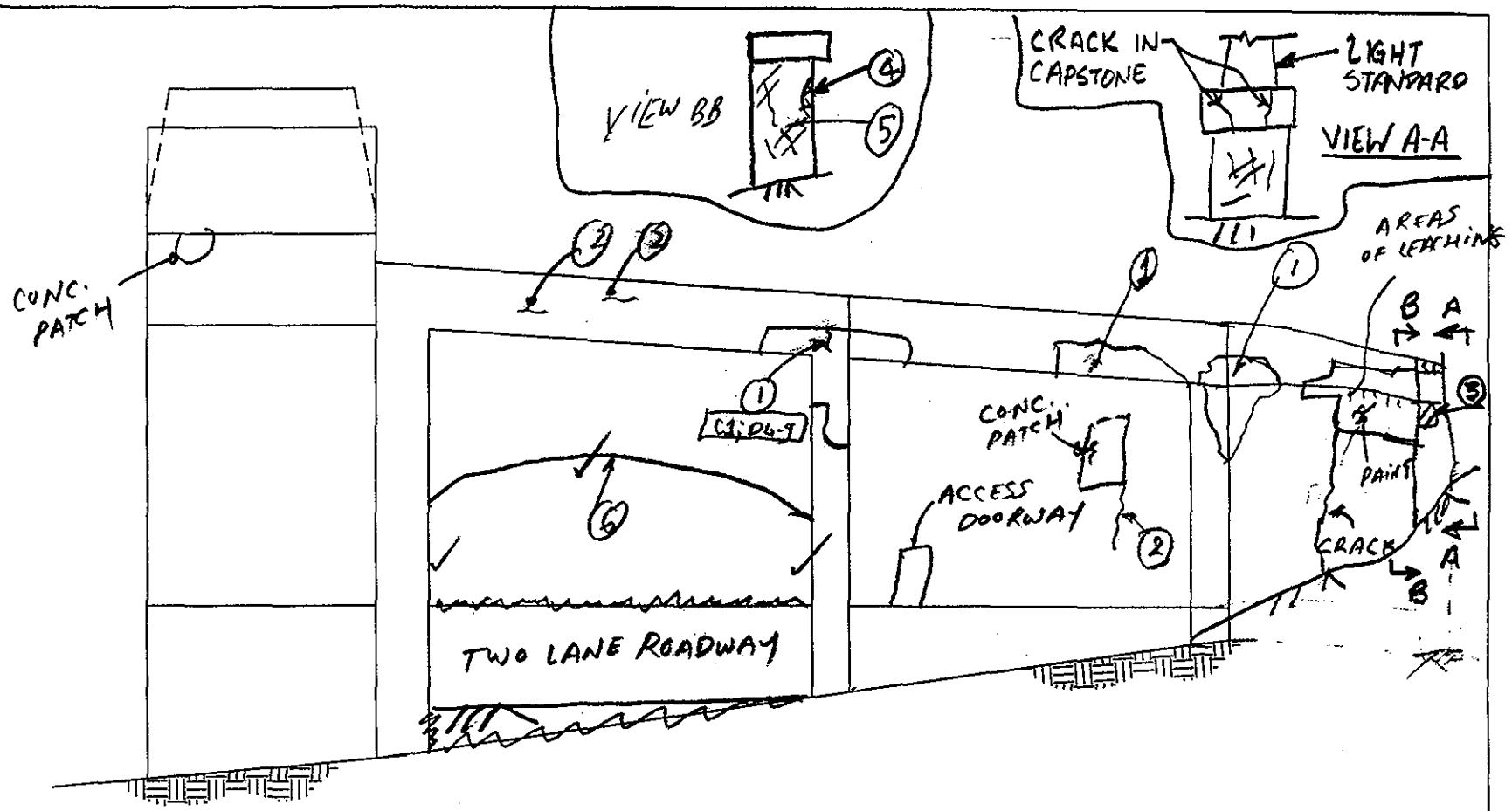

S ABUTMENT
W ELEVATION

NOTES:
1. CONC. PATCH WITH AREAS OF MAPCRACKING & LEACHING
2. CRACK WITH LEACHING
3. 1'x1' HOLLOW AREA
4. 8"x4"x1" DP SPALL
5. MAPCRACKING W/ AREAS OF SURFACE SPALLS (<1" DP)
6. CONC. WALLS & FLOOR SYSTEM IN ARCH OK.

SUBSTRUCTURE	EL
DEPARTMENT OF THE ARMY NEW ENGLAND DISTRICT CORPS OF ENGINEERS	
SAGAMORE HIGHWAY BRIDGE ROUTINE INSPECTION	
NOTES BY: LICHTENSTEIN CONSULTING ENGINEERS	
JOB #1986	DATE: 03/27/01
CREW: AP, EL	SHEET 5 OF 8

138
193

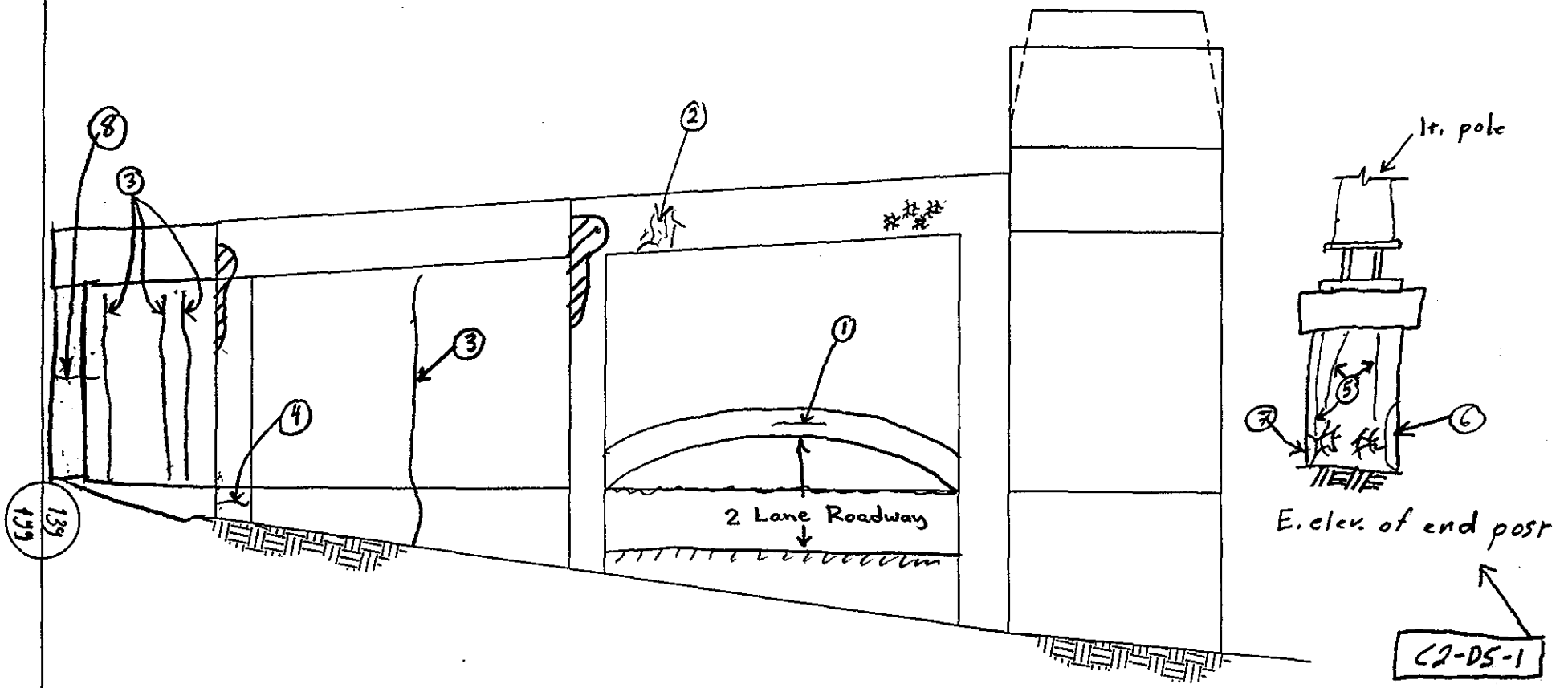

map cracking

denotes areas of patched concrete

S ABUTMENT
E ELEVATION

NOTES: ① 4'L horiz. crack
② cracks w/ efflo
③ Patched vert crack FH w/ crack reappearing (Surface patch)
④ 12'L horiz HL crack
⑤ 4'L vert HL crack
⑥ 6"x2' hollow area
⑦ 1'x6" " "
⑧ 1'L concrete patch w/ efflo along bot. edge of patch

SUBSTRUCTURE EL	
DEPARTMENT OF THE ARMY NEW ENGLAND DISTRICT CORPS OF ENGINEERS	
SAGAMORE HIGHWAY BRIDGE ROUTINE INSPECTION	
NOTES BY: LICHTENSTEIN CONSULTING ENGINEERS	
JOB #1986	DATE: 3/27/01
CREW: SD, SP	SHEET 5 OF 8

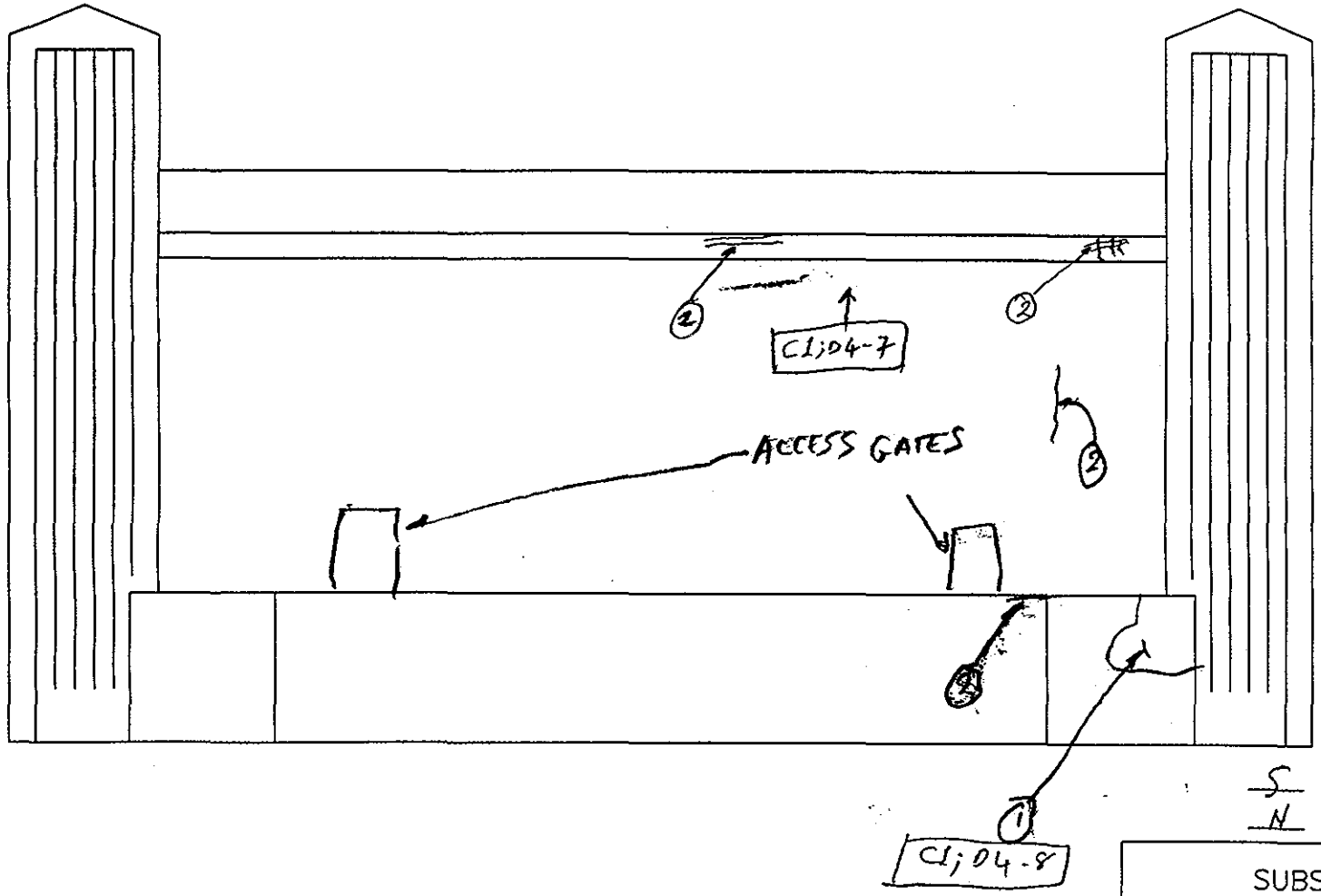

S ABUTMENT
N ELEVATION

NOTES:

1. PATCH WITH AREAS OF MAP CRACKING & LEACHING
2. CRACK WITH LEACHING

SUBSTRUCTURE

EL

DEPARTMENT OF THE ARMY
NEW ENGLAND DISTRICT CORPS OF ENGINEERS

SAGAMORE HIGHWAY BRIDGE
ROUTINE INSPECTION

NOTES BY: LICHTENSTEIN
CONSULTING ENGINEERS

JOB #1986 | DATE: 03/27/01
CREW: AP, EL | SHEET 4 OF 8

FIELD NOTES

PREPARED BY: Lichtenstein	JOB NO. 1986-06	BRIDGE NO. Sagamore
	DATE 4/26/01	SHEET 1 OF 2
	CREW KS, EL	

Chamber not accessible - fill covering bottom access holes & fill not stable enough to support ladder to reach upper holes

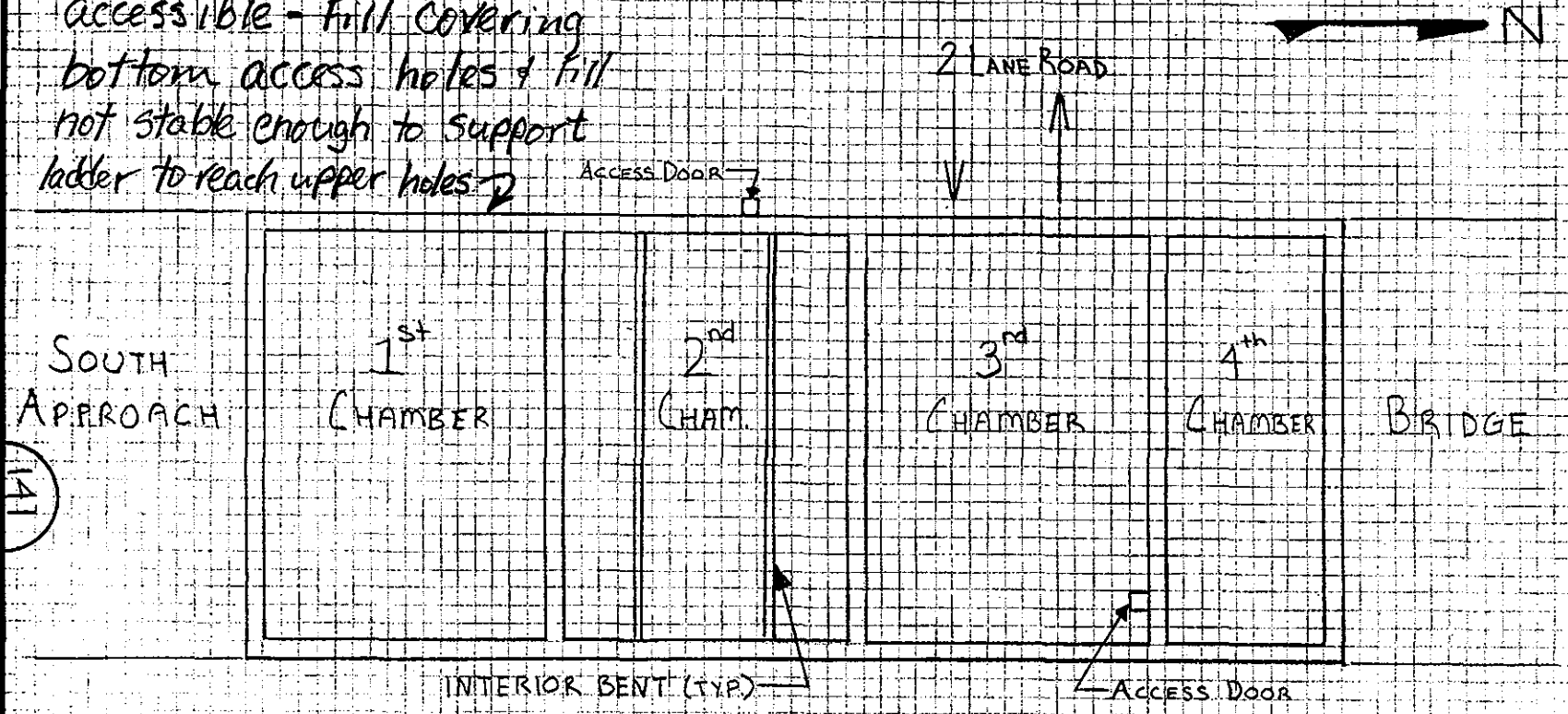

PLAN VIEW - INTERIOR CHAMBERS - SOUTH ABUTMENT

FIELD NOTES EL	JOB NO. 1986-06	BRIDGE NO. Sagamore
	DATE 4.10.01	SHEET 4 OF 11
PREPARED BY: A.G. LICHTENSTEIN	CREW EL	

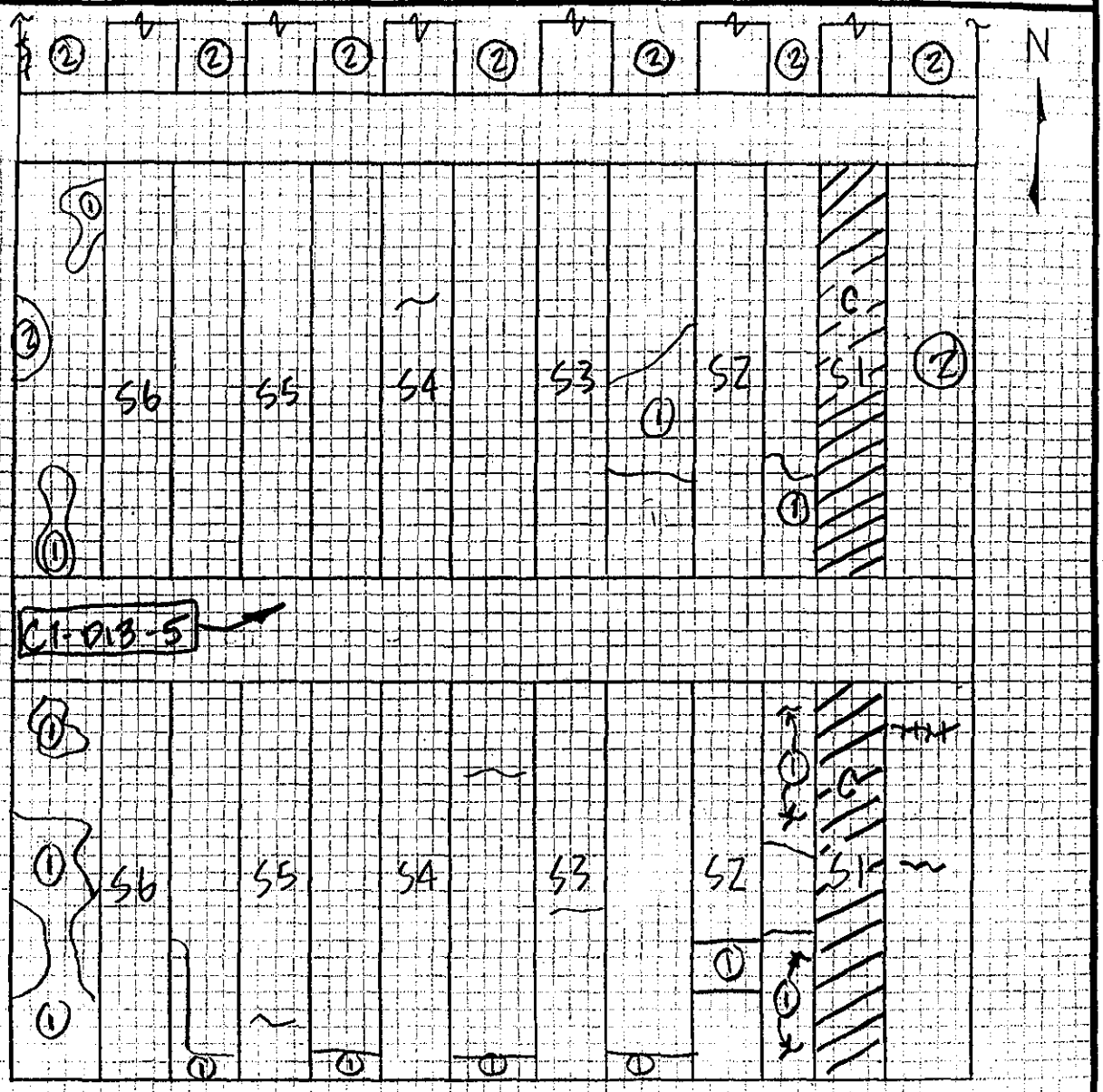

① AREA OF SCALE

② " " WATER STAINING

C - PAINTED AREA

+++ - HAIRLINE CR. W/ EFFLO.

~~PLAN~~ VIEW OF U/S OF DECK

SOUTH ABUT

CHAMBER 1

FIELD NOTES

PREPARED BY: A.G. LICHTENSTEIN

JOB NO. 1986-06

BRIDGE NO. Sagamore

DATE 4.10.01

SHEET 2 OF 11

CREW EL

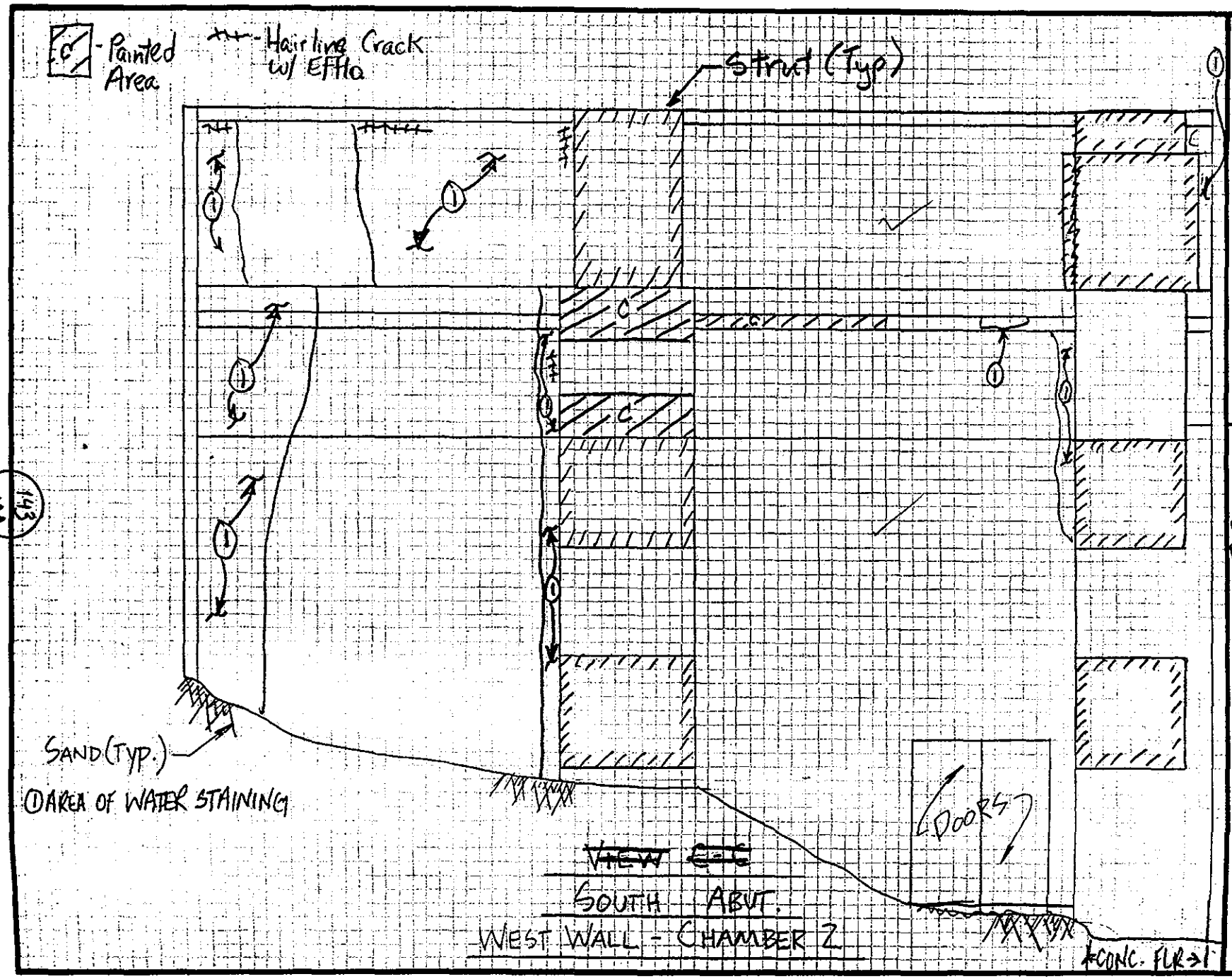

FIELD NOTES

EL

PREPARED BY: A.G. LICHTENSTEIN

JOB NO. 1986-06

DATE 4.10.01

CREW EL

BRIDGE NO. Sagamore

SHEET 3 OF 11

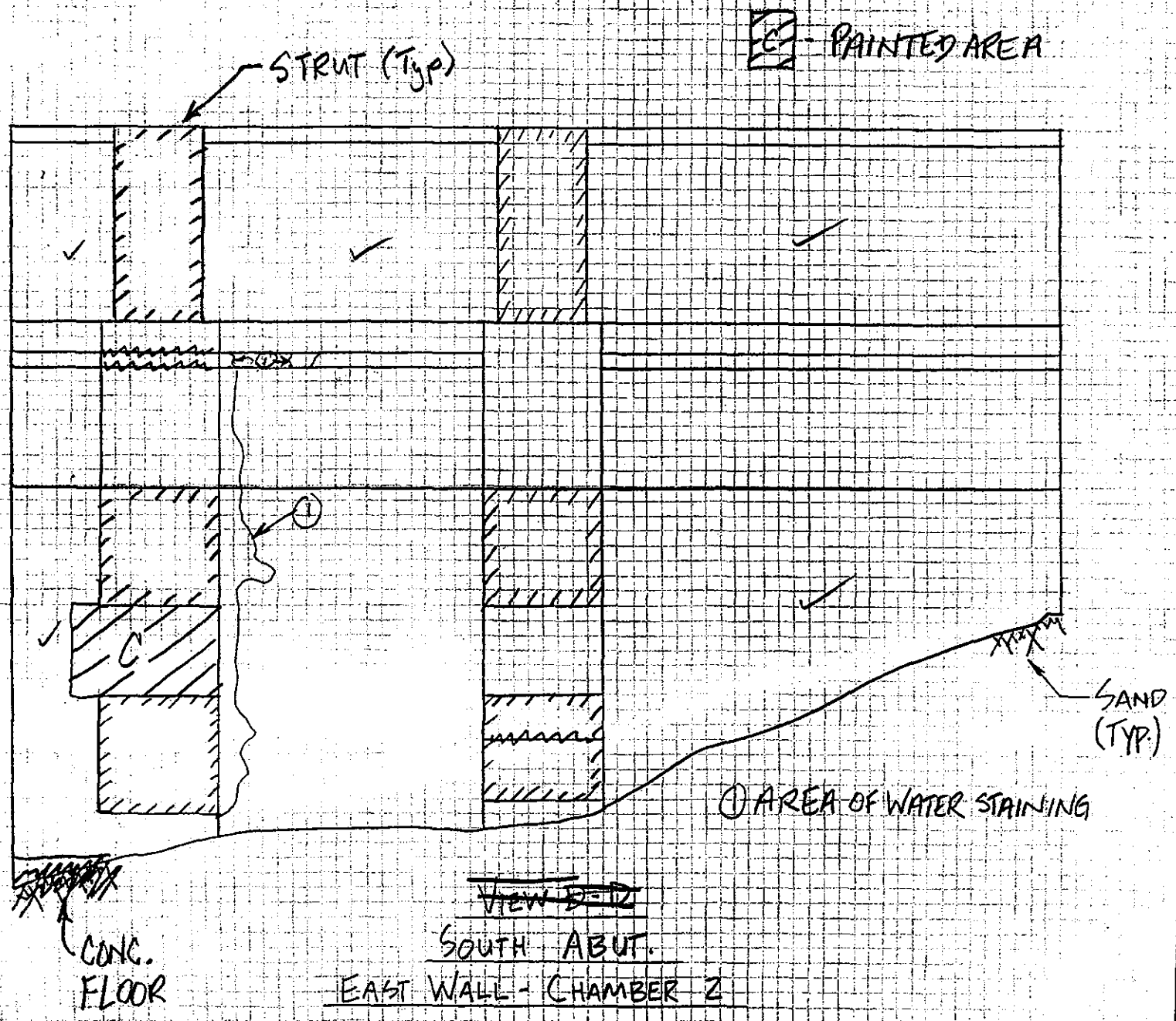

~~VIEW D-D~~

SOUTH ABUT.

EAST WALL - CHAMBER 2

144
199

FIELD NOTES

EL

	JOB NO. 1986-06	BRIDGE NO. Sagamore
	DATE 4-10-01	SHEET 1 OF 11
PREPARED BY: A.G. LICHTENSTEIN	CREW EL	

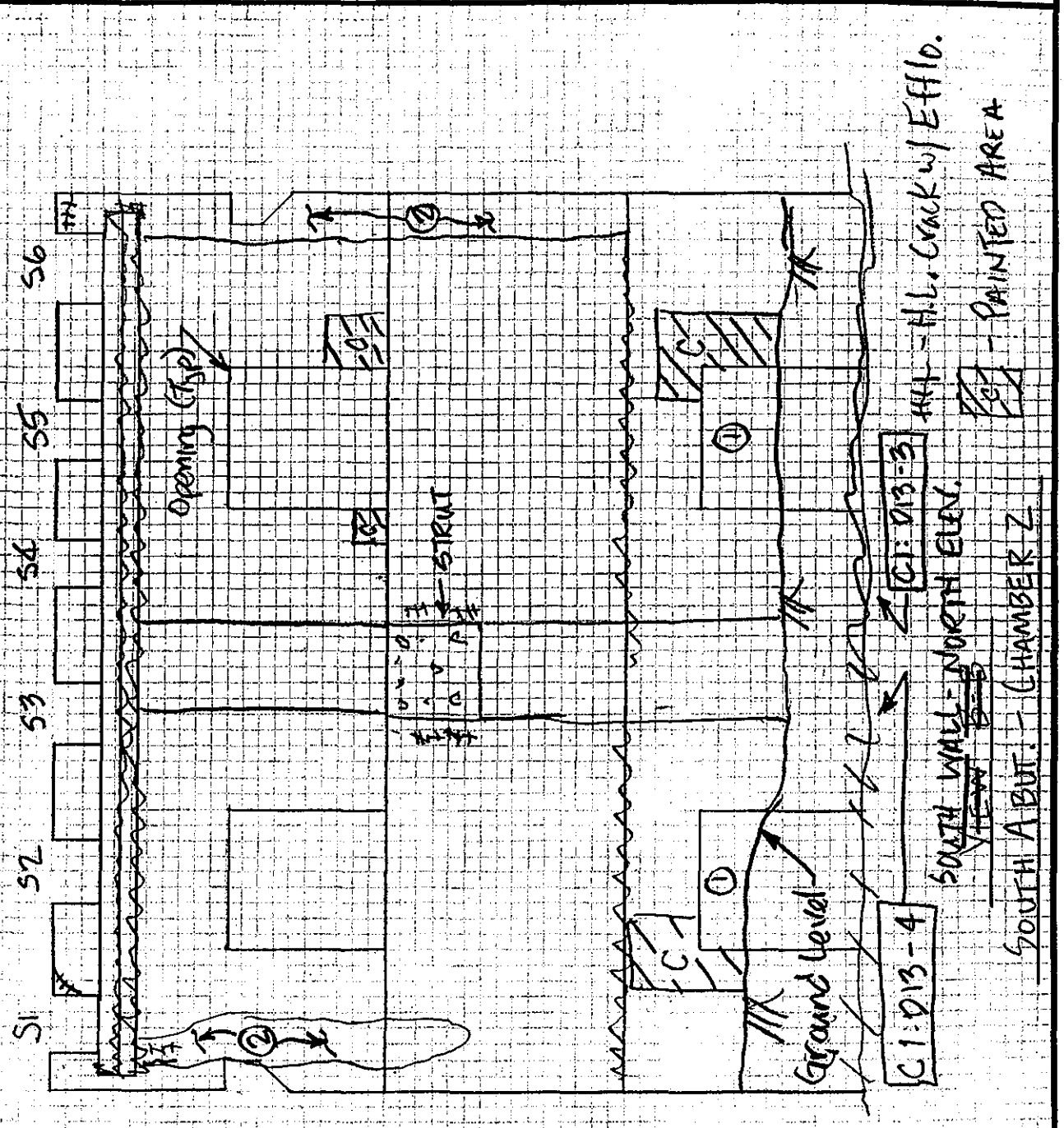

① ABOVE GROUND PORTION OF OPENING FILLED W/ SAND.
② AREA OF WATER STAINING

FIELD NOTES

EL

	JOB NO. 1986-06	BRIDGE NO. Sagamore
	DATE 4·10·01	SHEET 7 OF 11
PREPARED BY: A.G. LICHTENSTEIN	CREW	

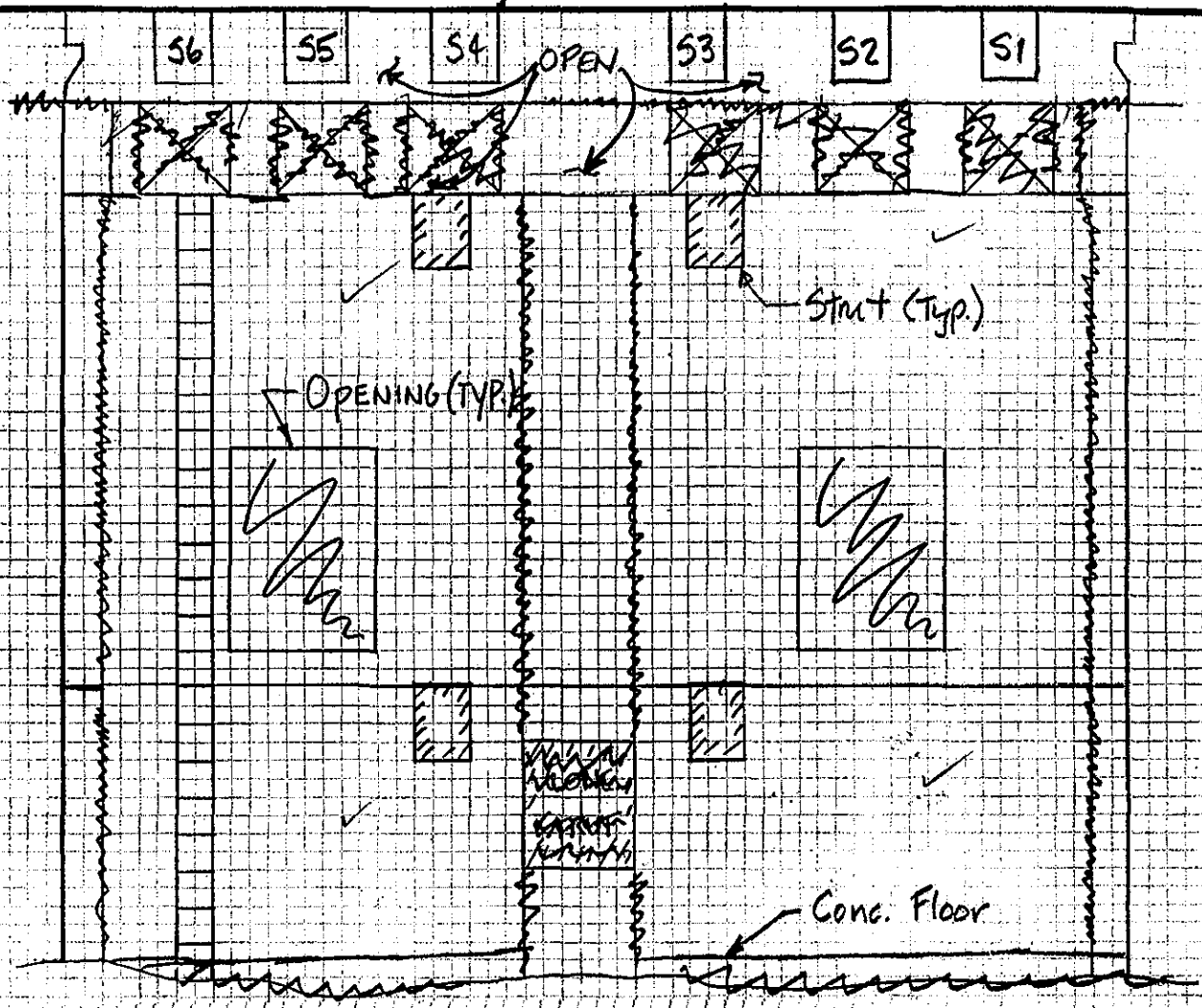

CHAMBER #2 - N. WALL, S. ELEV

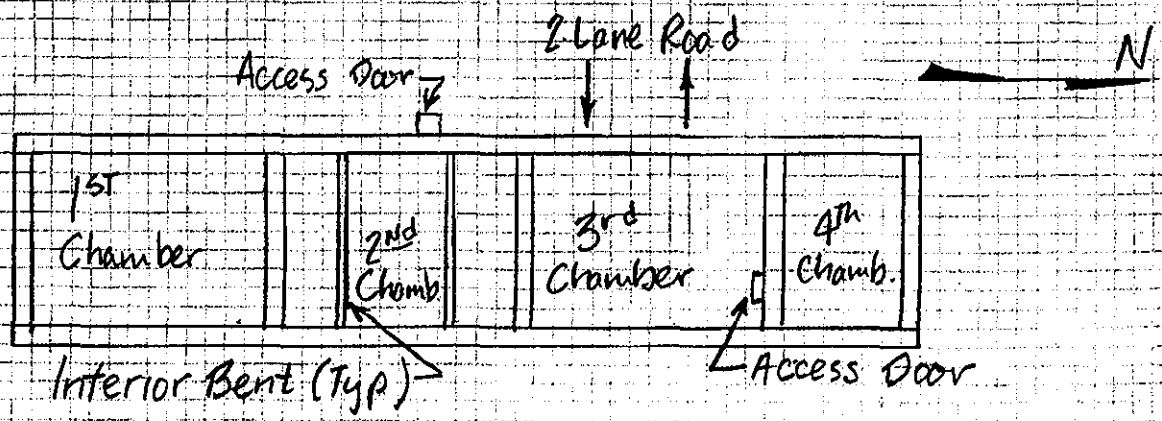

PLAN VIEW - INTERIOR CHAMBERS, S. ABUT

FIELD NOTES EL	JOB NO. 1986-06	BRIDGE NO., Sagamore
	DATE 4.10.01	SHEET 6 OF 11
PREPARED BY: A.G. LICHTENSTEIN	CREW EL	

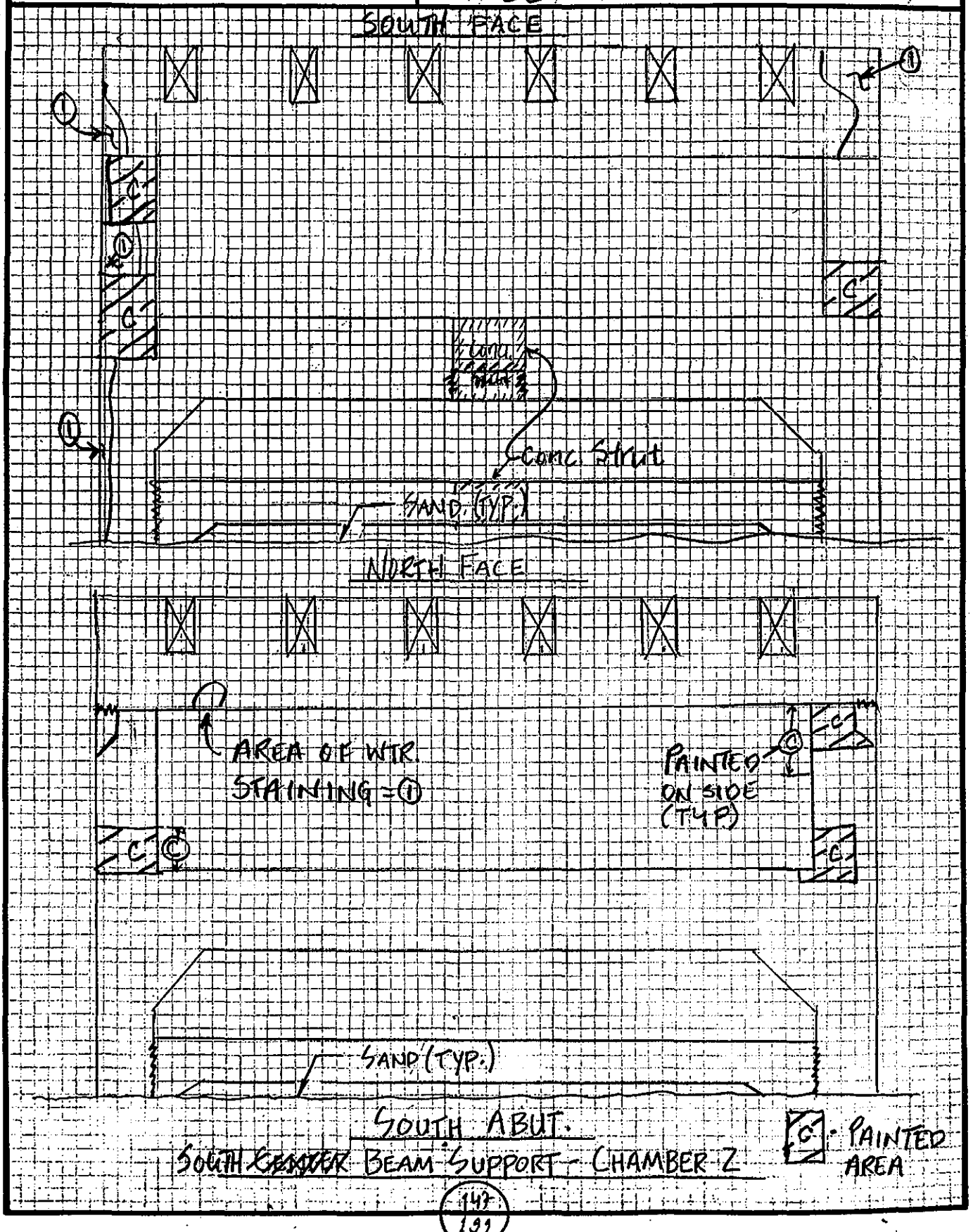

FIELD NOTES EL

	JOB NO. 1986-06	BRIDGE NO. Sagamore
	DATE 4·10·01	SHEET 5 OF 11
PREPARED BY: A.G. LICHTENSTEIN	CREW EL	

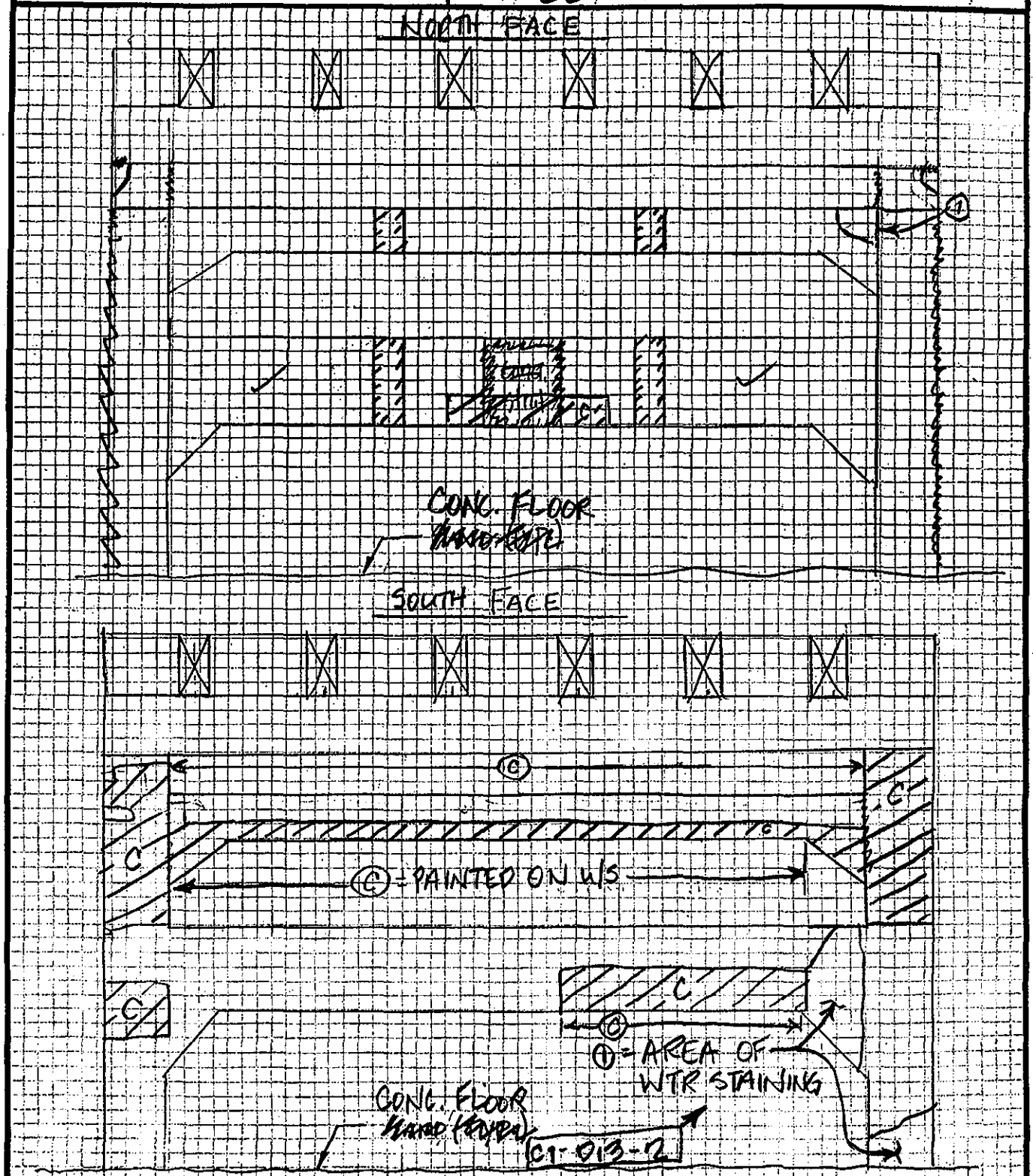

FIELD NOTES EL	JOB NO. 1986-06	BRIDGE NO. Sagamore
	DATE 4/10/01	SHEET 1 of 1
PREPARED BY: A.G. LICHTENSTEIN	CREW SD	

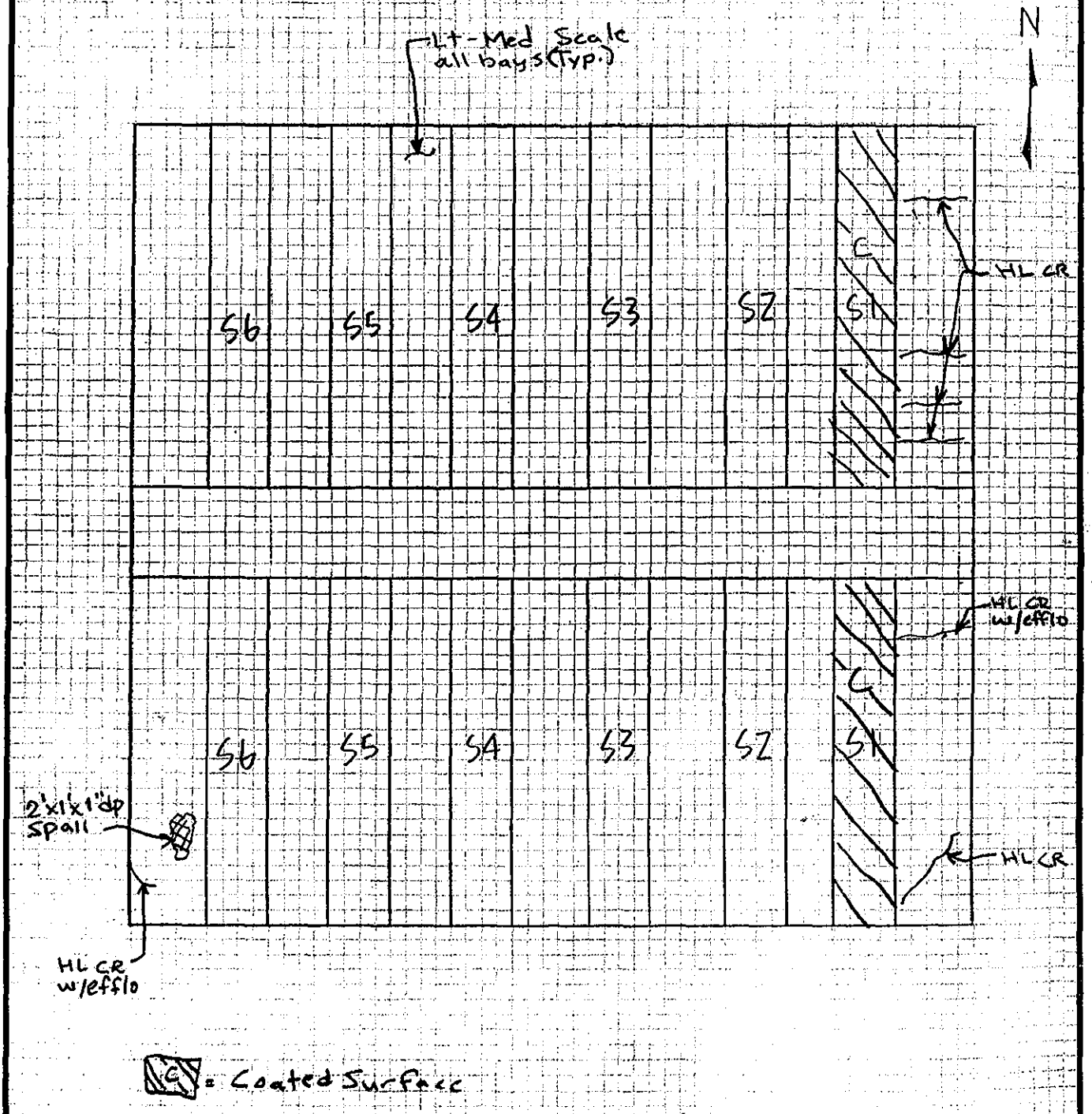

~~PLAN~~ VIEW OF U/S OF DECK

SOUTH ABUT

CHAMBER #3

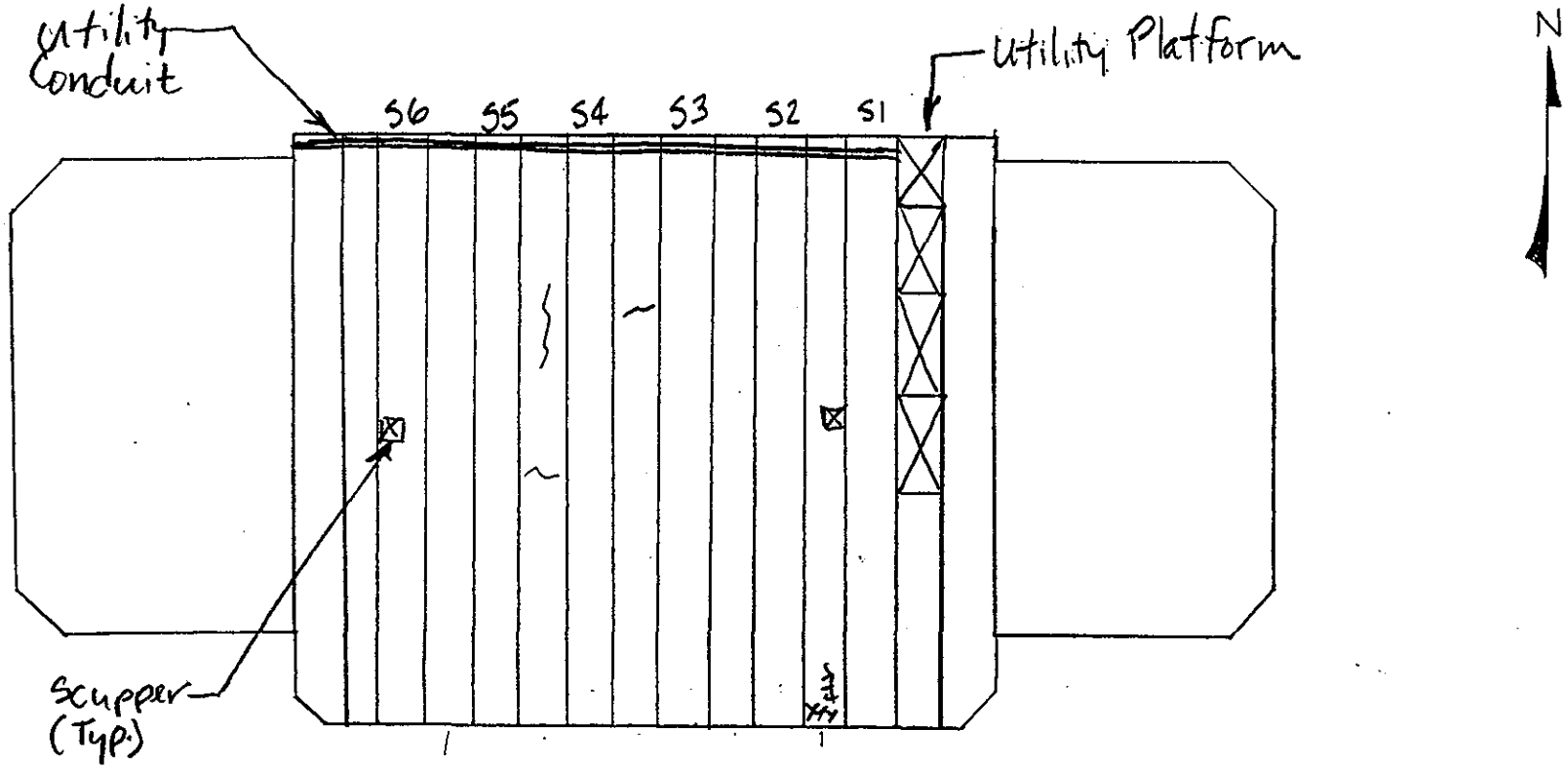

VIEW OF UNDERSIDE OF DECK
SOUTH ABUT - CHAMBER ~~3~~ 4

S ABUTMENT
~~ELEVATION~~

NOTES:
~~HH~~ - HAIRLINE CRACK w/ EFFLO.

SUBSTRUCTURE EL	
DEPARTMENT OF THE ARMY NEW ENGLAND DISTRICT CORPS OF ENGINEERS	
SAGAMORE HIGHWAY BRIDGE ROUTINE INSPECTION	
NOTES BY: LICHTENSTEIN CONSULTING ENGINEERS	
JOB #1986	DATE: 4-10-01
CREW: EL	SHEET 8 OF 11

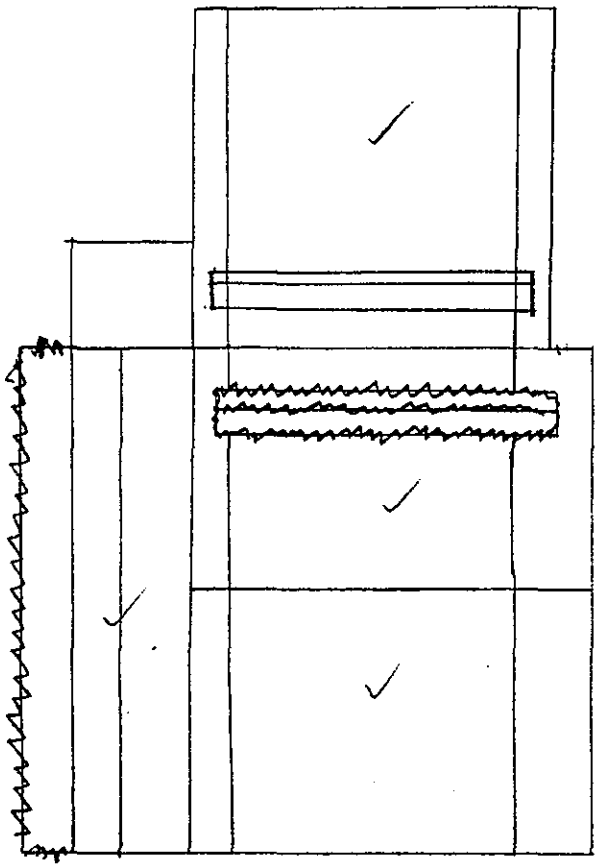

WEST WALL

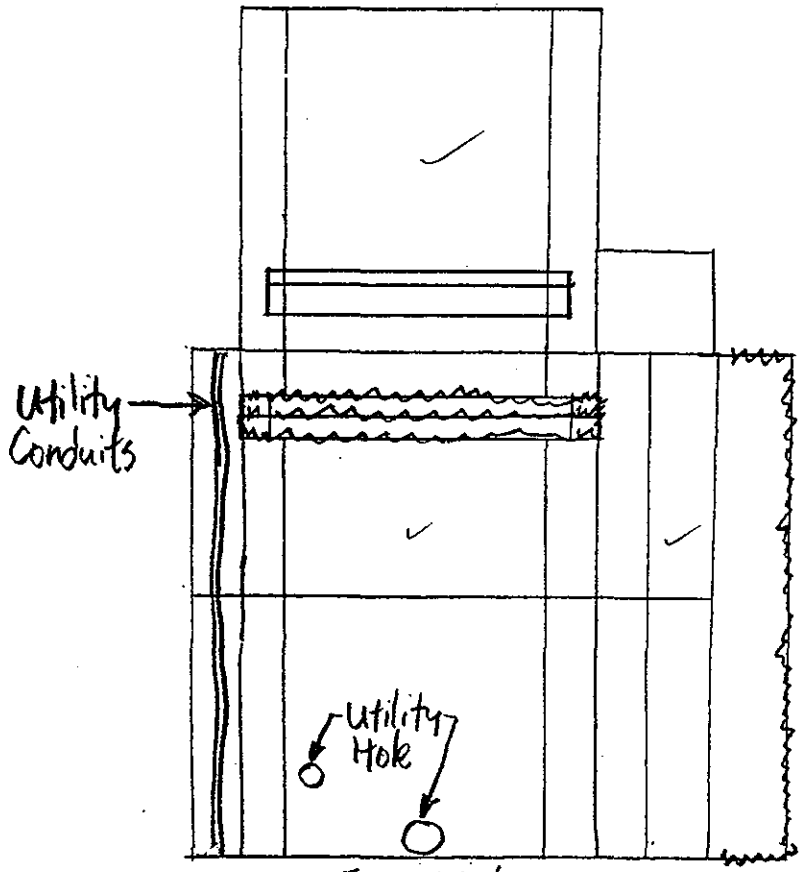

EAST WALL

SOUTH ABUT - CHAMBER ~~3~~ 4

S ABUTMENT

~~ELEVATION~~

NOTES:

SUBSTRUCTURE EL	
DEPARTMENT OF THE ARMY NEW ENGLAND DISTRICT CORPS OF ENGINEERS	
SAGAMORE HIGHWAY BRIDGE *ROUTINE INSPECTION*	
NOTES BY: LICHTENSTEIN CONSULTING ENGINEERS	
JOB #1986	DATE: 4·10·01
CREW: EL	SHEET 9 OF 11

FIELD NOTES EL	JOB NO. 1986-06	BRIDGE NO. Sagamore
	DATE 4·10·01	SHEET 11 OF 11
PREPARED BY: A.G. LICHTENSTEIN	CREW EL	

① AREA OF WATER STAINING

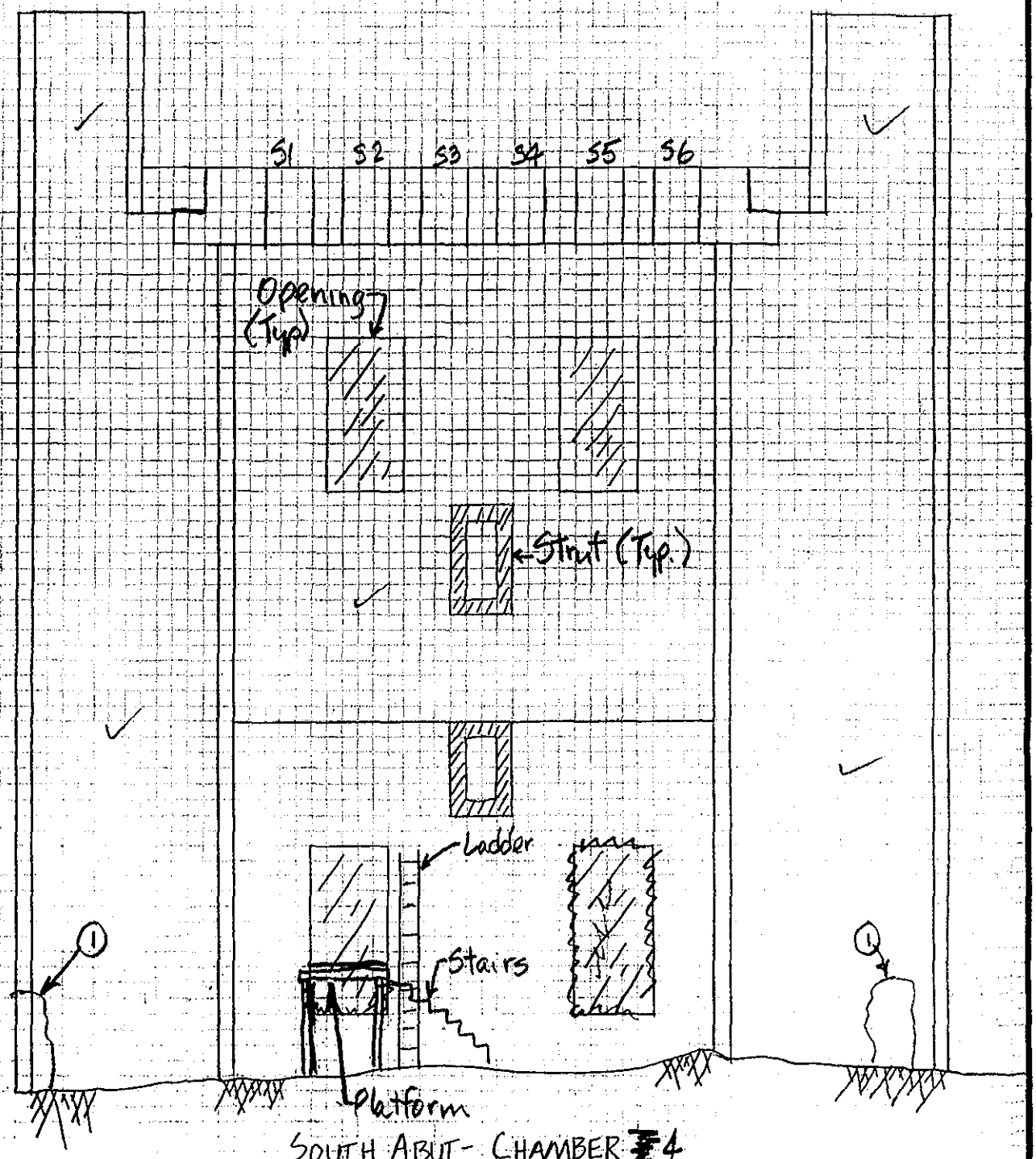

SOUTH ABUT- CHAMBER #4

NORTH FACE OF SOUTH WALL

FIELD NOTES EL	JOB NO. 1986-06	BRIDGE NO. Sagamore
	DATE 4·10·01	SHEET 10 OF 11
PREPARED BY: A.G. LICHTENSTEIN	CREW EL	

① CRACK, SEALED VIA INJECTION
② AREA OF WATER STAINING

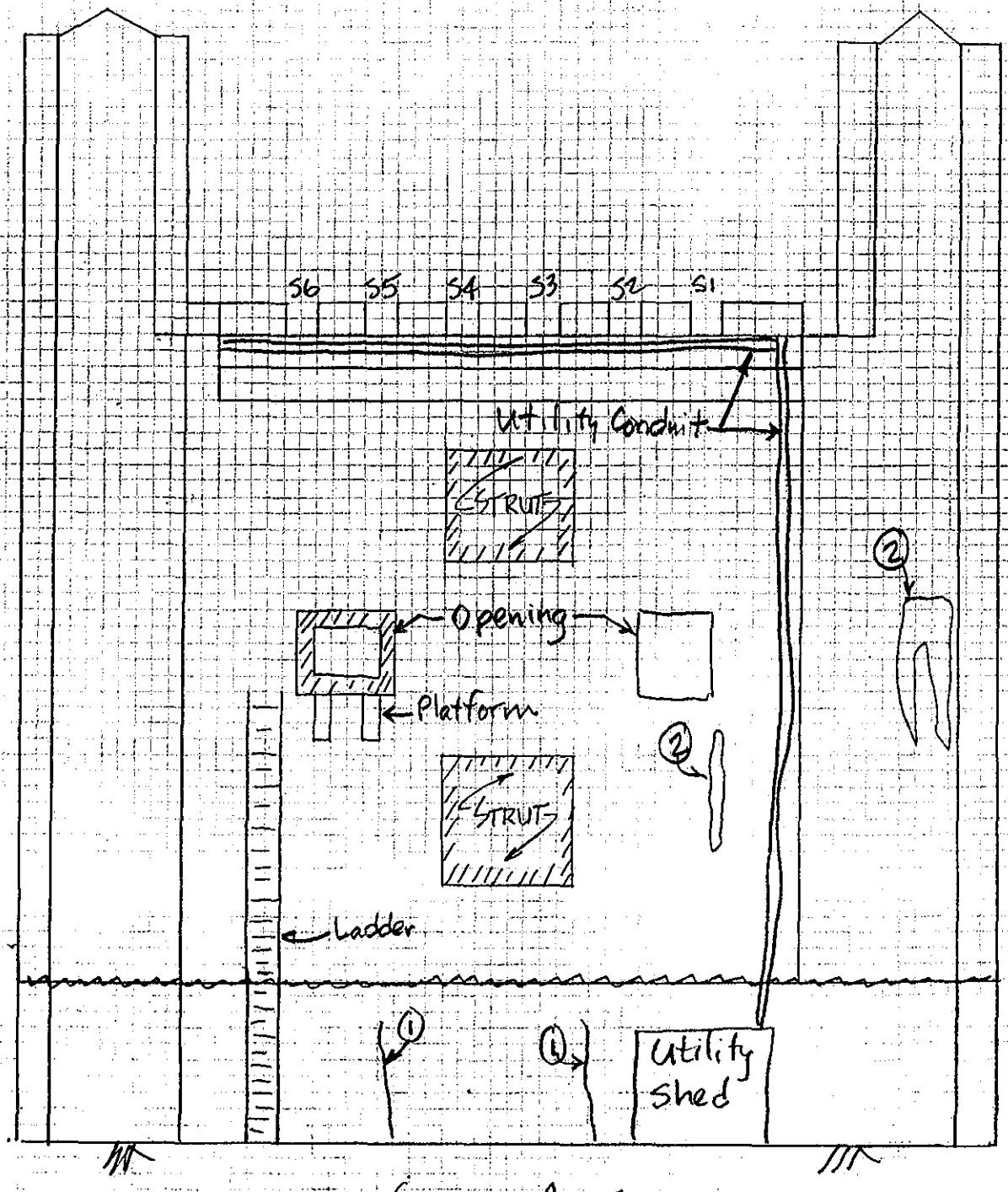

SOUTH ABUT.

5. Elev – NORTH WALL – CHAMBER ~~3~~ 4

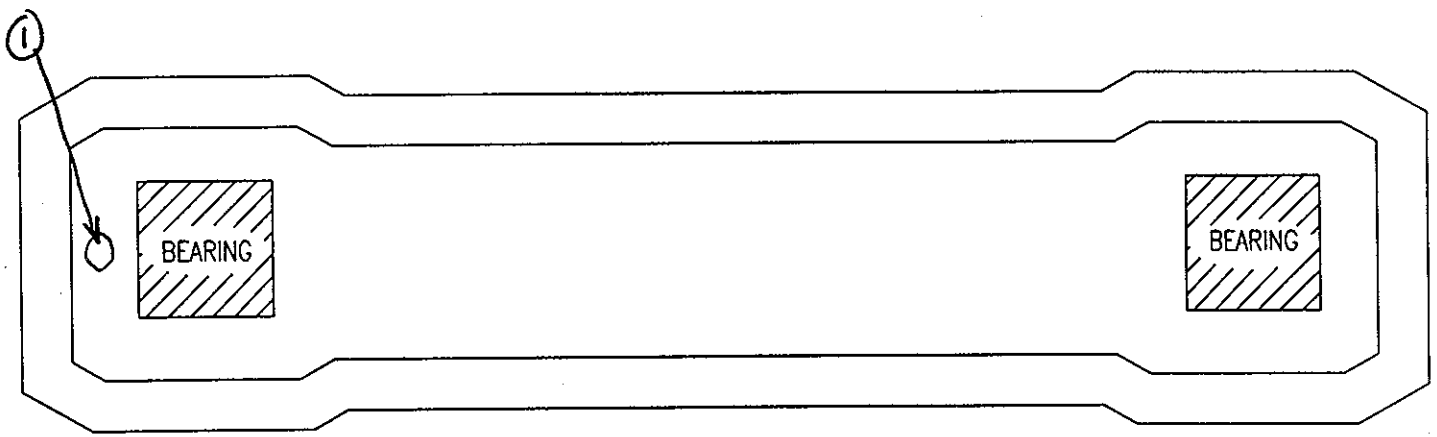

PIER 1

NOTES: 1 1/16" x 12" x 1" Dp spall
Entire surface painted

TOP OF PIER EL	
DEPARTMENT OF THE ARMY NEW ENGLAND DSTRICT CORPS OF ENGINEERS	
SAGAMORE HIGHWAY BRIDGE ROUTINE INSPECTION	
NOTES BY: LICHTENSTEIN CONSULTING ENGINEERS	
JOB #1986	DATE: 4/9/01
CREW: SP, EL	SHEET 2 OF 10

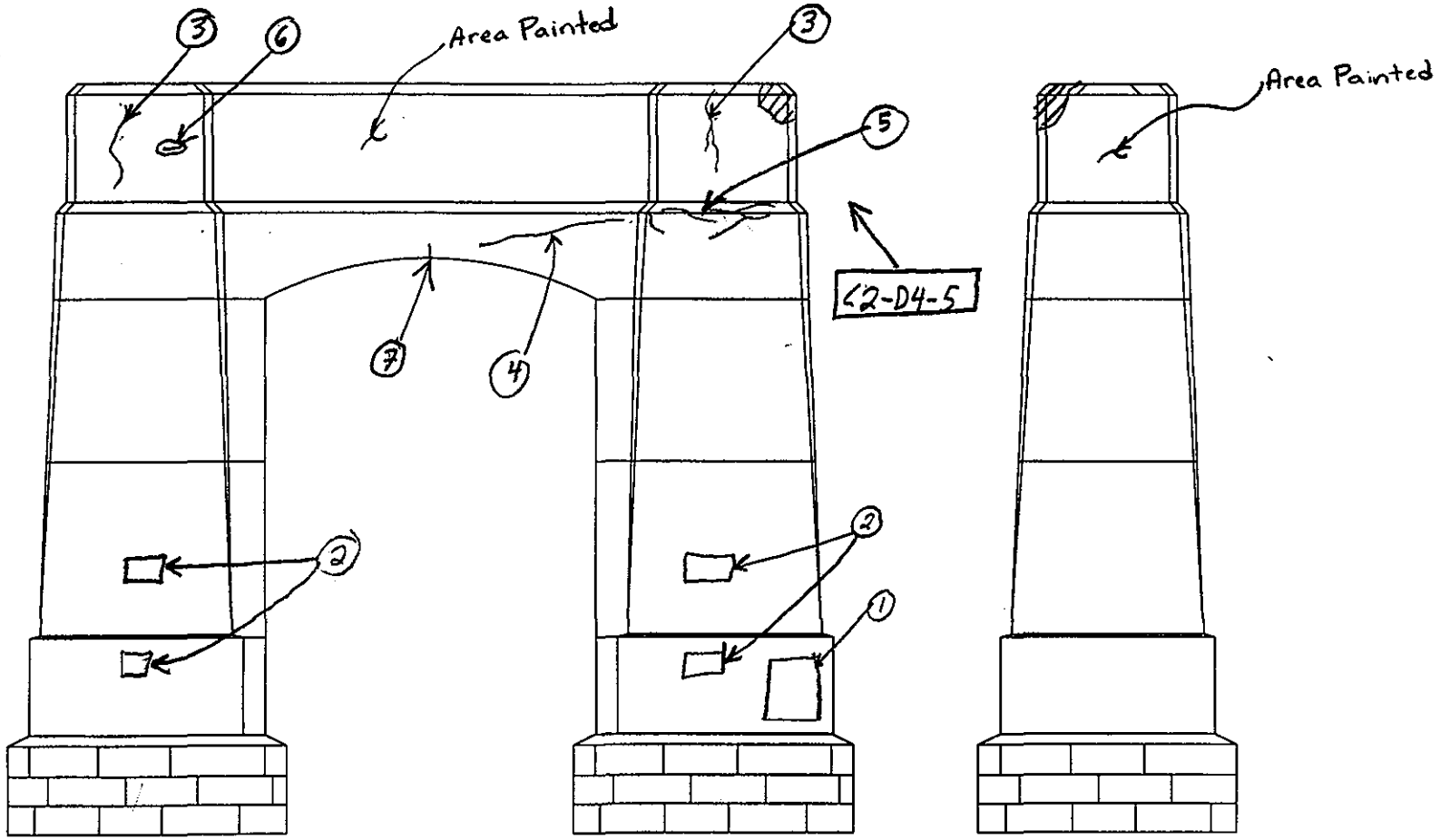

S ELEVATION

E ELEV.

denotes concrete patch

C2-D4-4

PIER 1

NOTES:
1. 5'H x 5'L graffiti
2. "Danger: Keep Off" signs
3. HL vert crack 8'L
4. HL horiz. crack 10'L
5. Misc. cracks
6. Shallow rebar about 6"L
7. FW crack on u/s of arch w/ efflo

SUBSTRUCTURE EL	
DEPARTMENT OF THE ARMY NEW ENGLAND DISTRICT CORPS OF ENGINEERS	
SAGAMORE HIGHWAY BRIDGE ROUTINE INSPECTION	
NOTES BY: LICHTENSTEIN CONSULTING ENGINEERS	
JOB #1986	DATE: 3/27/01
CREW: SD, SP	SHEET 3 OF 8

155
199

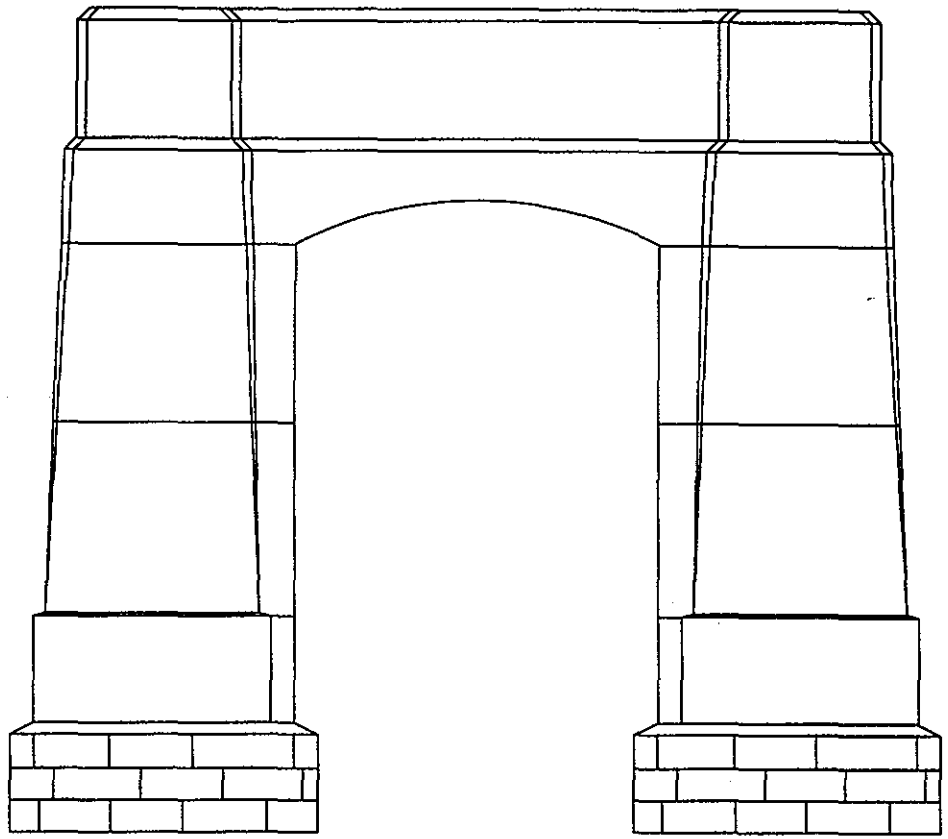

___ ELEVATION

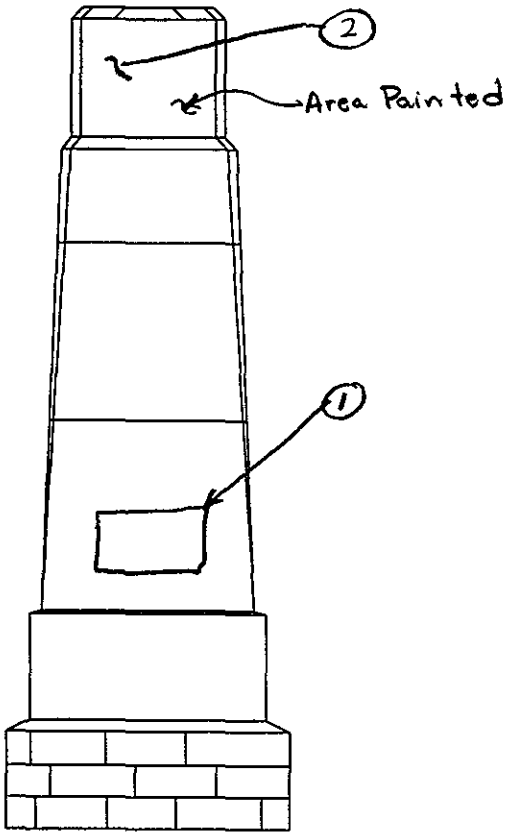

W ELEV.

PIER 1

NOTES: ① Navigation sign
② Rust stains

SUBSTRUCTURE	
DEPARTMENT OF THE ARMY NEW ENGLAND DISTRICT CORPS OF ENGINEERS	
SAGAMORE HIGHWAY BRIDGE ROUTINE INSPECTION	
NOTES BY: LICHTENSTEIN EL CONSULTING ENGINEERS	
JOB #1986	DATE: 3/27/01
CREW: SD, SP	SHEET 4 OF 8

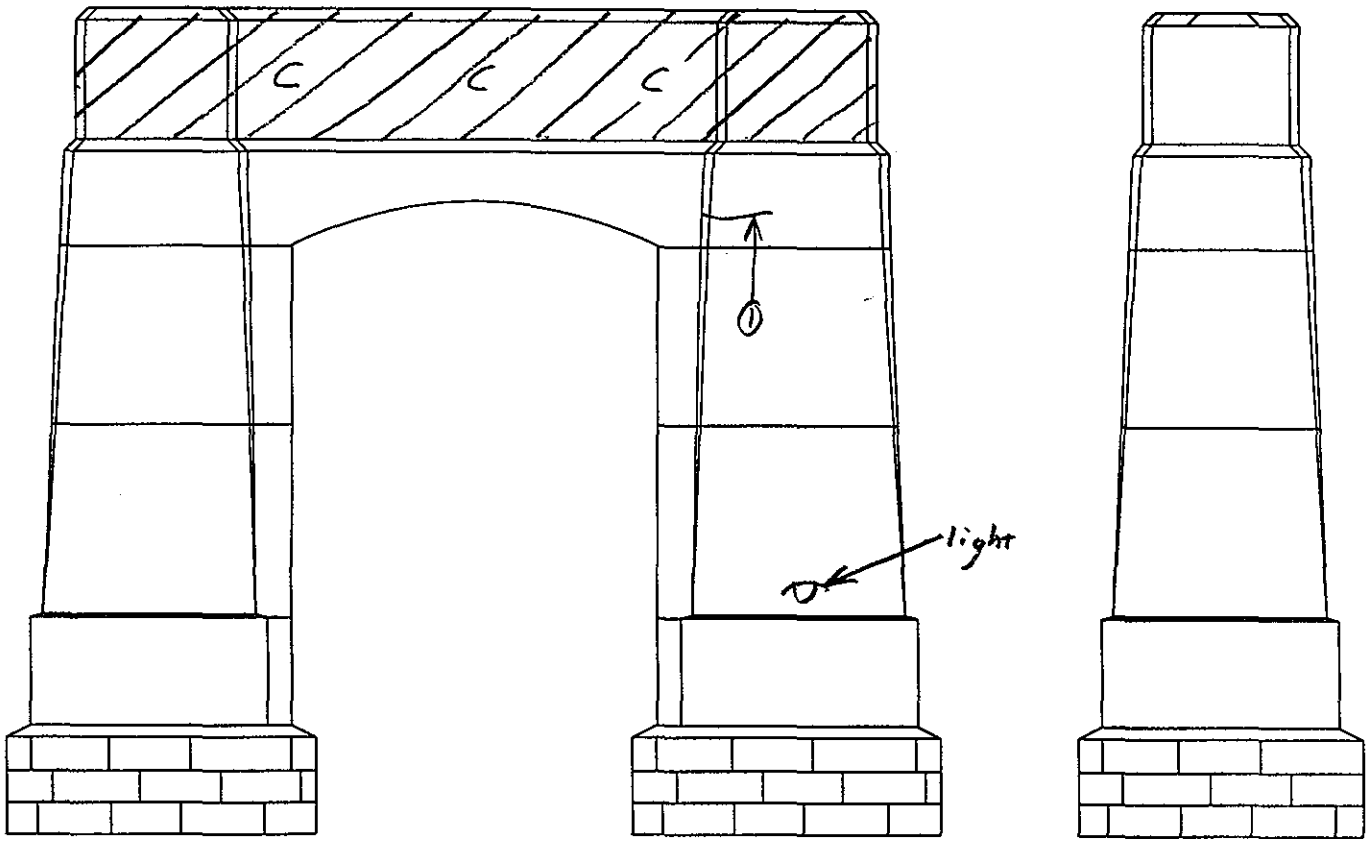

N ELEVATION

___ ELEV.

C Painted area

PIER 1

NOTES: ① Medium crack
- Areas of lt. to moderate scale throughout

SUBSTRUCTURE EL

DEPARTMENT OF THE ARMY
NEW ENGLAND DISTRICT CORPS OF ENGINEERS

SAGAMORE HIGHWAY BRIDGE
ROUTINE INSPECTION

NOTES BY: LICHTENSTEIN
CONSULTING ENGINEERS

JOB #1986	DATE: 4/13/01
CREW: SP EL	SHEET 11 OF 11

157
199

• 1 loose bolt out of 8 (four bolts each side of splice) at upper and lower splice locations in access ladder.

N

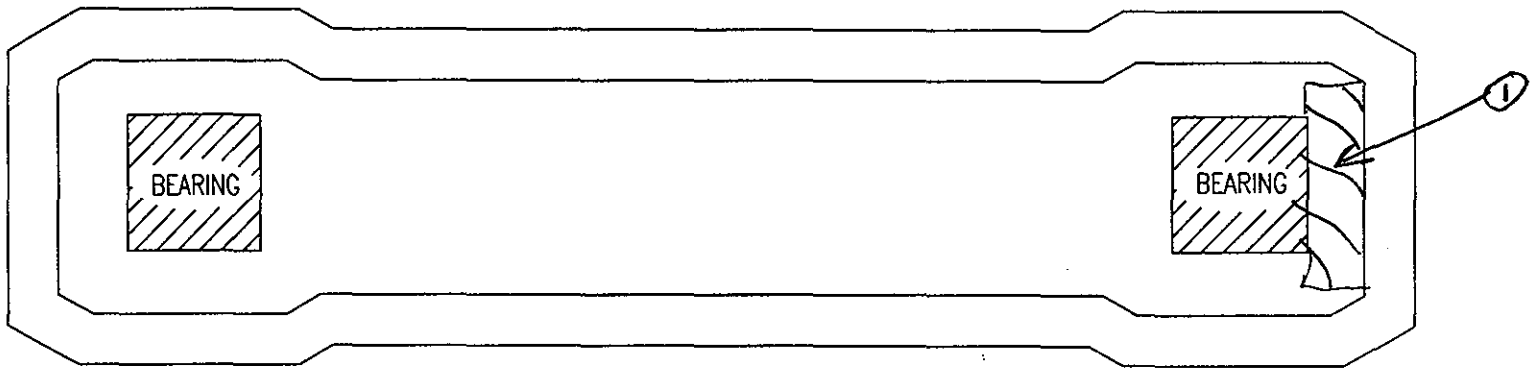

PIER 2

NOTES: (1) 8'x2' hollow area

TOP OF PIER EL	
DEPARTMENT OF THE ARMY NEW ENGLAND DSTRICT CORPS OF ENGINEERS	
SAGAMORE HIGHWAY BRIDGE ROUTINE INSPECTION	
NOTES BY: LICHTENSTEIN CONSULTING ENGINEERS	
JOB #1986	DATE: 4/9/01
CREW: SP, EL	SHEET 10 OF 10

C2-D24-6

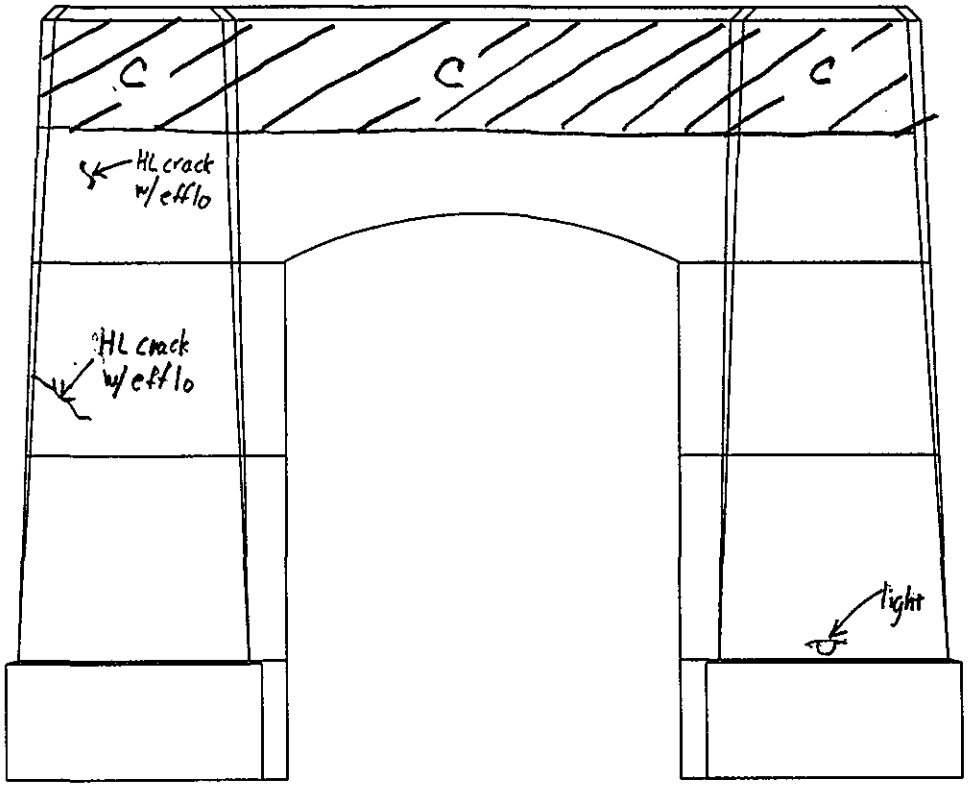

S ELEVATION

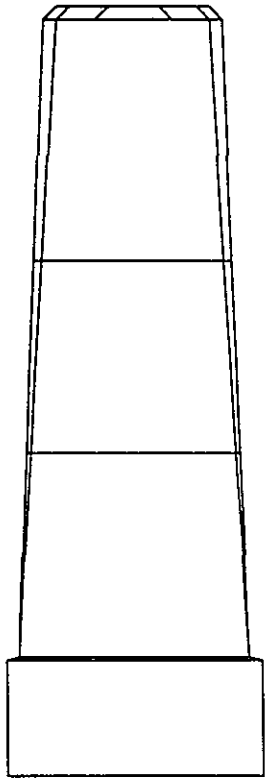

___ ELEV.

PIER 2

C - Painted Area

NOTES:

- Lt scale throughout

SUBSTRUCTURE EL

DEPARTMENT OF THE ARMY
NEW ENGLAND DISTRICT CORPS OF ENGINEERS

SAGAMORE HIGHWAY BRIDGE
ROUTINE INSPECTION

NOTES BY: LICHTENSTEIN
CONSULTING ENGINEERS

JOB #1986 | DATE: 4/13/01

CREW: SP, EL | SHEET 10 OF 11

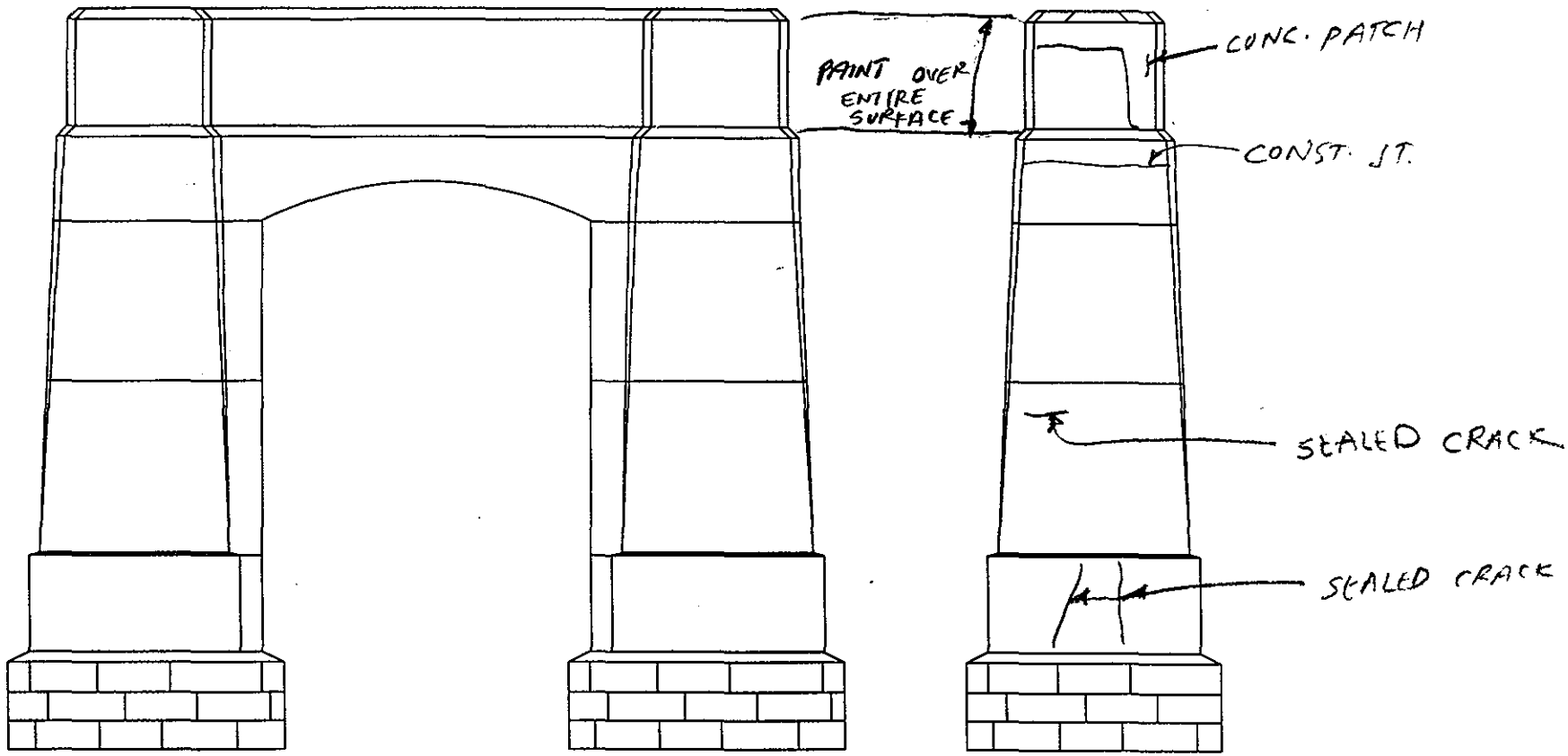

___ ELEVATION

W ELEV.

PIER 2

NOTES:

SUBSTRUCTURE EL

DEPARTMENT OF THE ARMY
NEW ENGLAND DISTRICT CORPS OF ENGINEERS

SAGAMORE HIGHWAY BRIDGE
ROUTINE INSPECTION

NOTES BY: LICHTENSTEIN
CONSULTING ENGINEERS

JOB #1986	DATE: 03/27/01
CREW: AP, EL	SHEET 2 OF 8

160
139

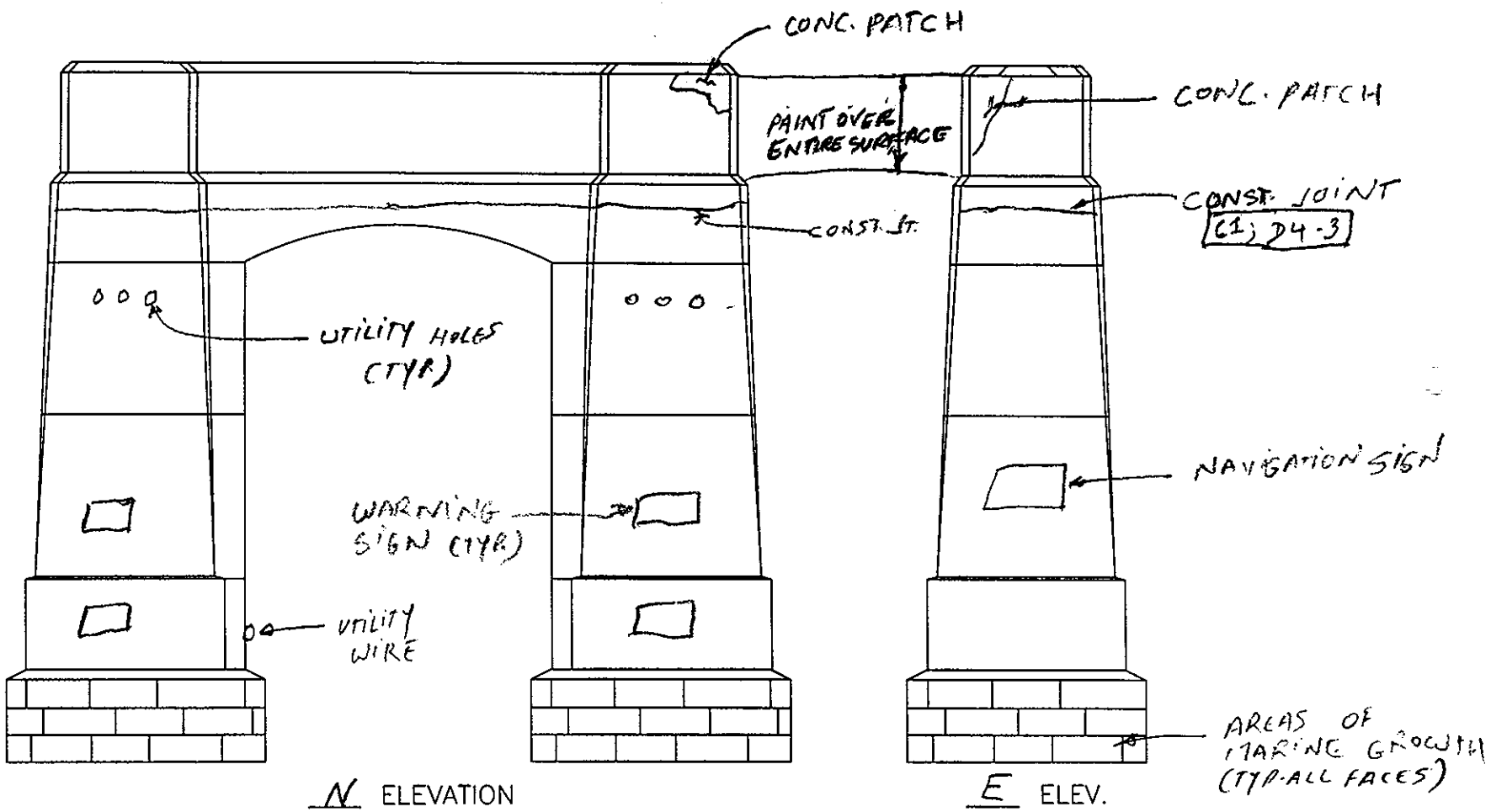

PIER 2

NOTES:

SUBSTRUCTURE EL

DEPARTMENT OF THE ARMY
NEW ENGLAND DISTRICT CORPS OF ENGINEERS

SAGAMORE HIGHWAY BRIDGE
ROUTINE INSPECTION

NOTES BY: LICHTENSTEIN
CONSULTING ENGINEERS

JOB #1986 | DATE: 03/27/01

CREW: AP, EL | SHEET 1 OF 8

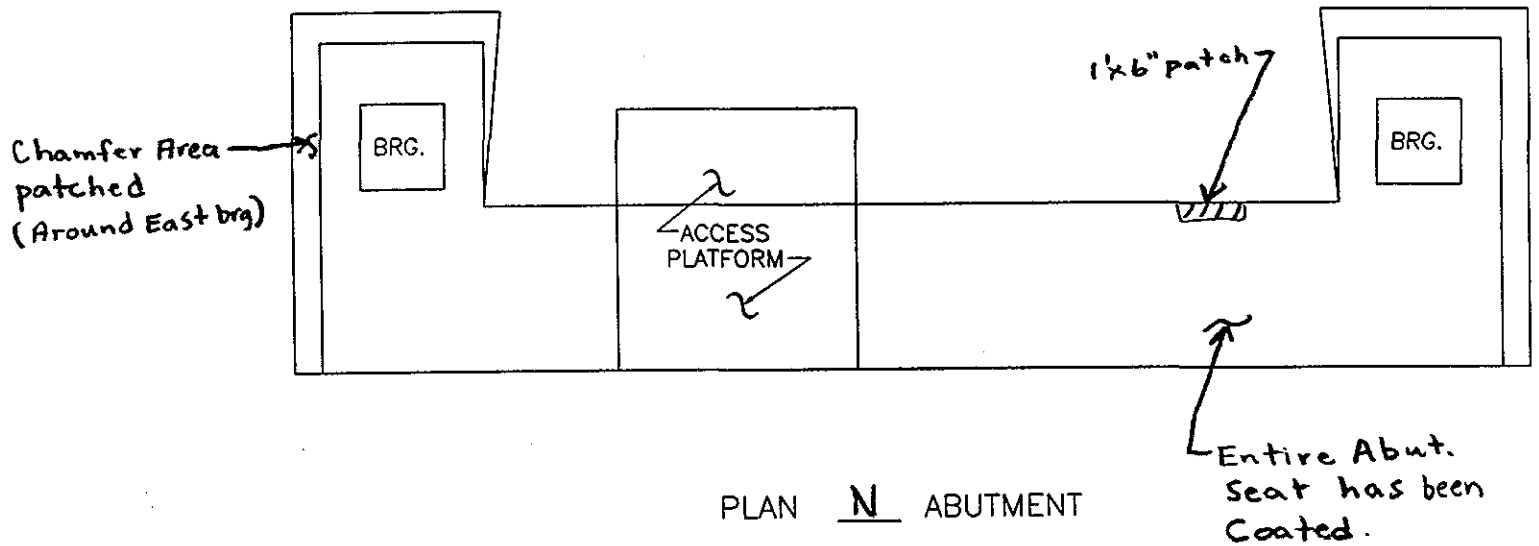

PLAN N ABUTMENT

162
199

NOTES:

SUBSTRUCTURE EL	
DEPARTMENT OF THE ARMY NEW ENGLAND DISTRICT CORPS OF ENGINEERS	
SAGAMORE HIGHWAY BRIDGE ROUTINE INSPECTION	
NOTES BY: LICHTENSTEIN CONSULTING ENGINEERS	
JOB #1986	DATE: 4/19/01
CREW: SD	SHEET 2 OF 2

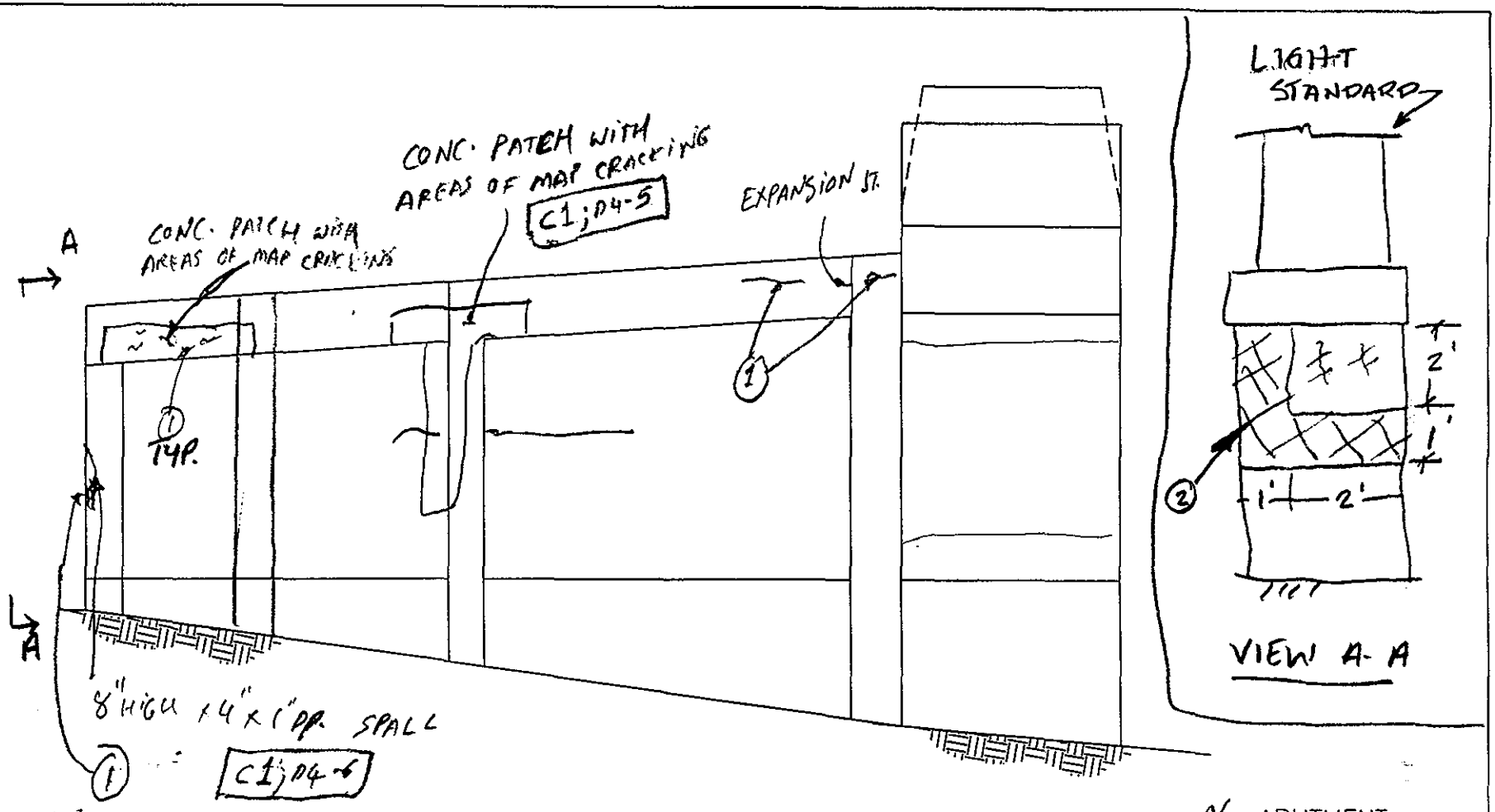

N ABUTMENT
W ELEVATION

NOTES:

1. CRACK WITH LEACHING
2. SPALL UP TO 3" DP.

SUBSTRUCTURE EL	
DEPARTMENT OF THE ARMY NEW ENGLAND DISTRICT CORPS OF ENGINEERS	
SAGAMORE HIGHWAY BRIDGE ROUTINE INSPECTION	
NOTES BY: LICHTENSTEIN CONSULTING ENGINEERS	
JOB #1986	DATE: 03/27/01
CREW: AP, EL	SHEET 3 OF 8

163
193

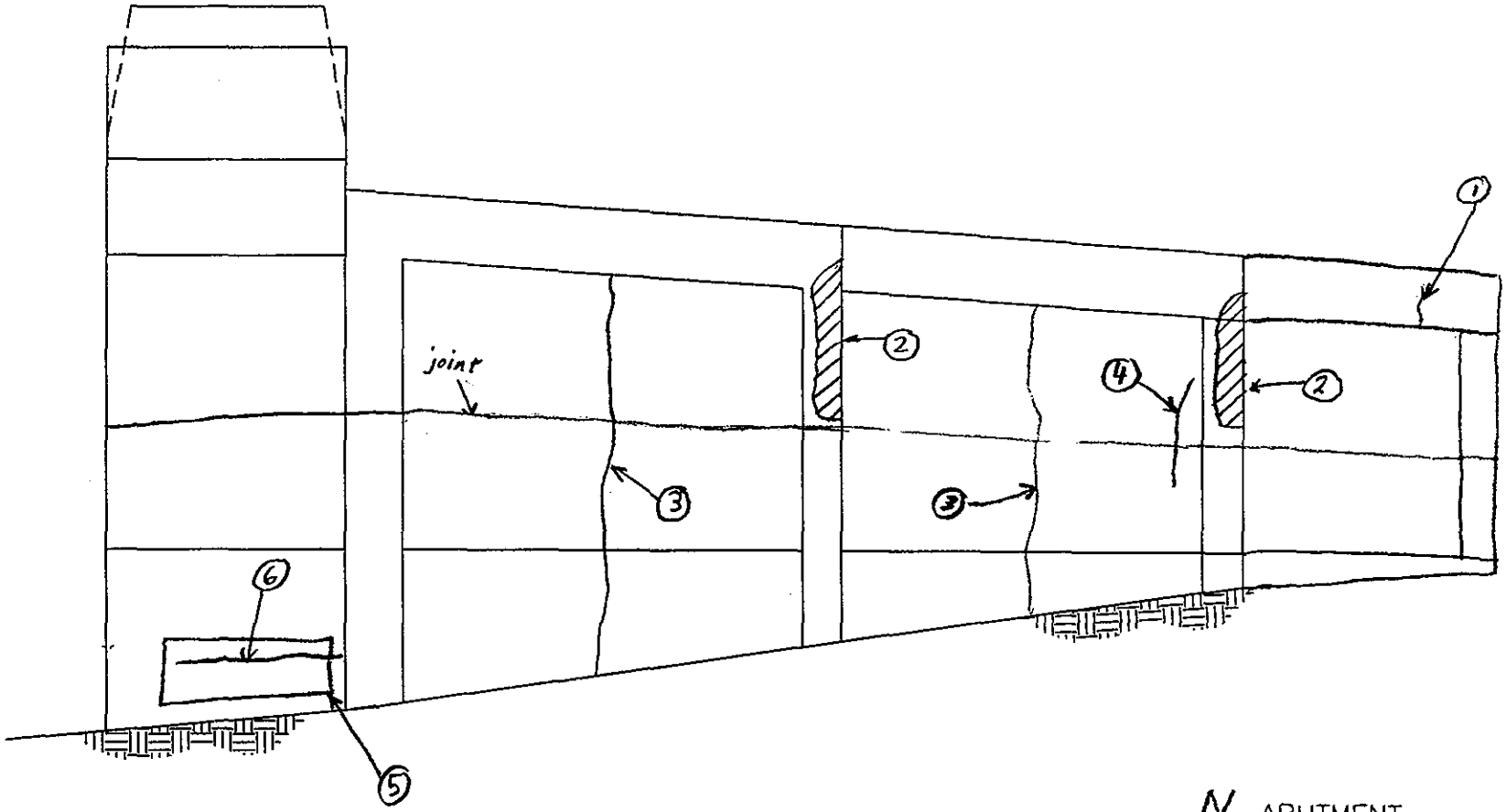

▨ denotes patched concrete area

N ABUTMENT
E ELEVATION

NOTES: ① Vert crack w/ efflo.
② Random horiz cracks in patch
③ Patched vert crack w/ crack reappearing, FH
④ 10'L patched vert crack
⑤ 5'H x 12'L area of graffiti
⑥ 12'L horiz crack

SUBSTRUCTURE EL	
DEPARTMENT OF THE ARMY NEW ENGLAND DISTRICT CORPS OF ENGINEERS	
SAGAMORE HIGHWAY BRIDGE ROUTINE INSPECTION	
NOTES BY: LICHTENSTEIN CONSULTING ENGINEERS	
JOB #1986	DATE: 3/27/01
CREW: SD, SP	SHEET 1 OF 8

165
183

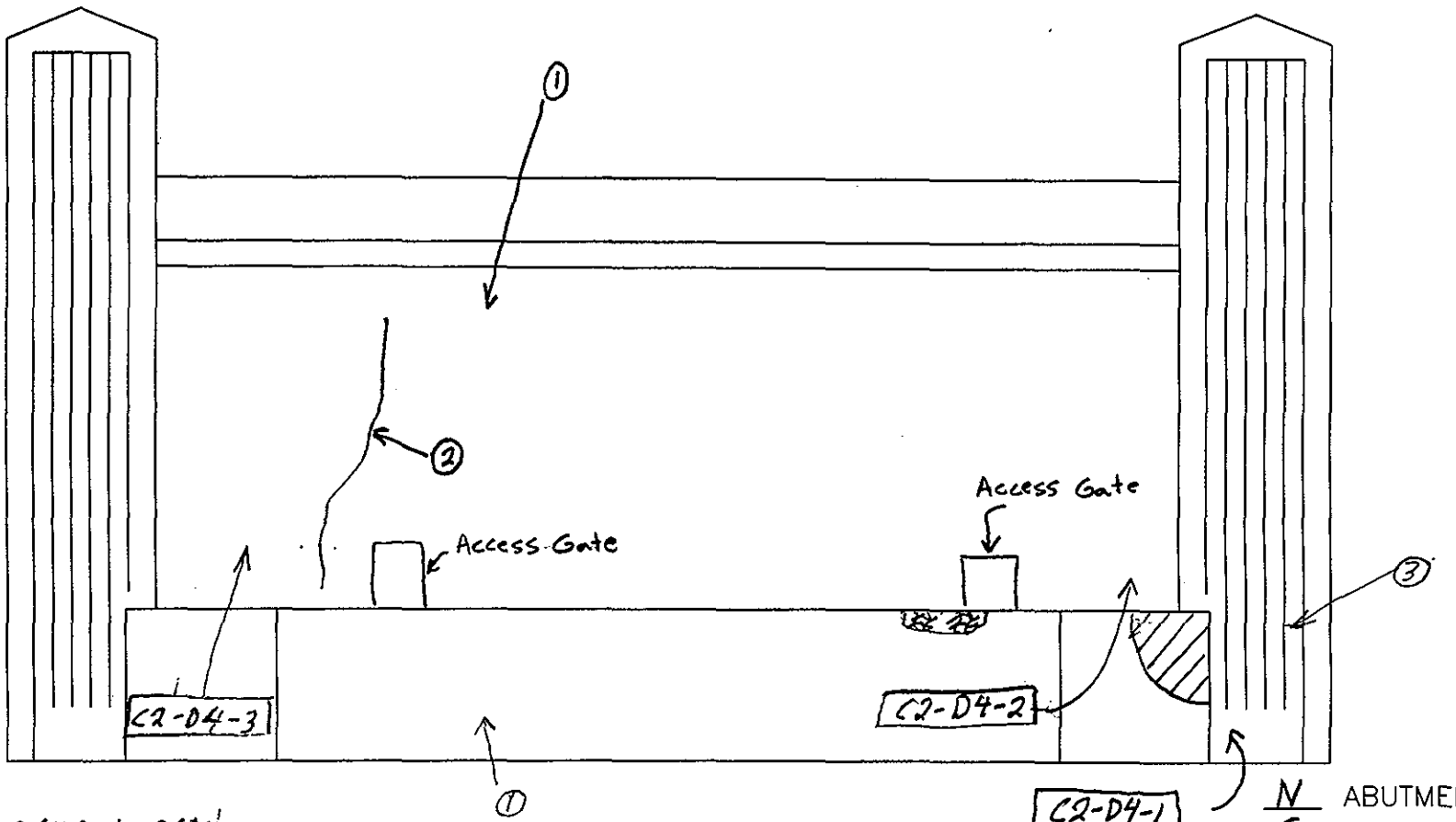

N ABUTMENT
S ELEVATION

denotes concrete patch
map cracking

NOTES: 1 backwall painted
2 HL vert crack
3 HL horiz crack

SUBSTRUCTURE EL	
DEPARTMENT OF THE ARMY NEW ENGLAND DISTRICT CORPS OF ENGINEERS	
SAGAMORE HIGHWAY BRIDGE ROUTINE INSPECTION	
NOTES BY: LICHTENSTEIN CONSULTING ENGINEERS	
JOB #1986	DATE: 3/27/01
CREW: SD, SP	SHEET 2 OF 8

FIELD NOTES

PREPARED BY: Lichtenstein	JOB NO. 1986-06
CREW KS, EL	DATE 4/26/01
	SHEET 2 of 2
	BRIDGE NO. Sagamore

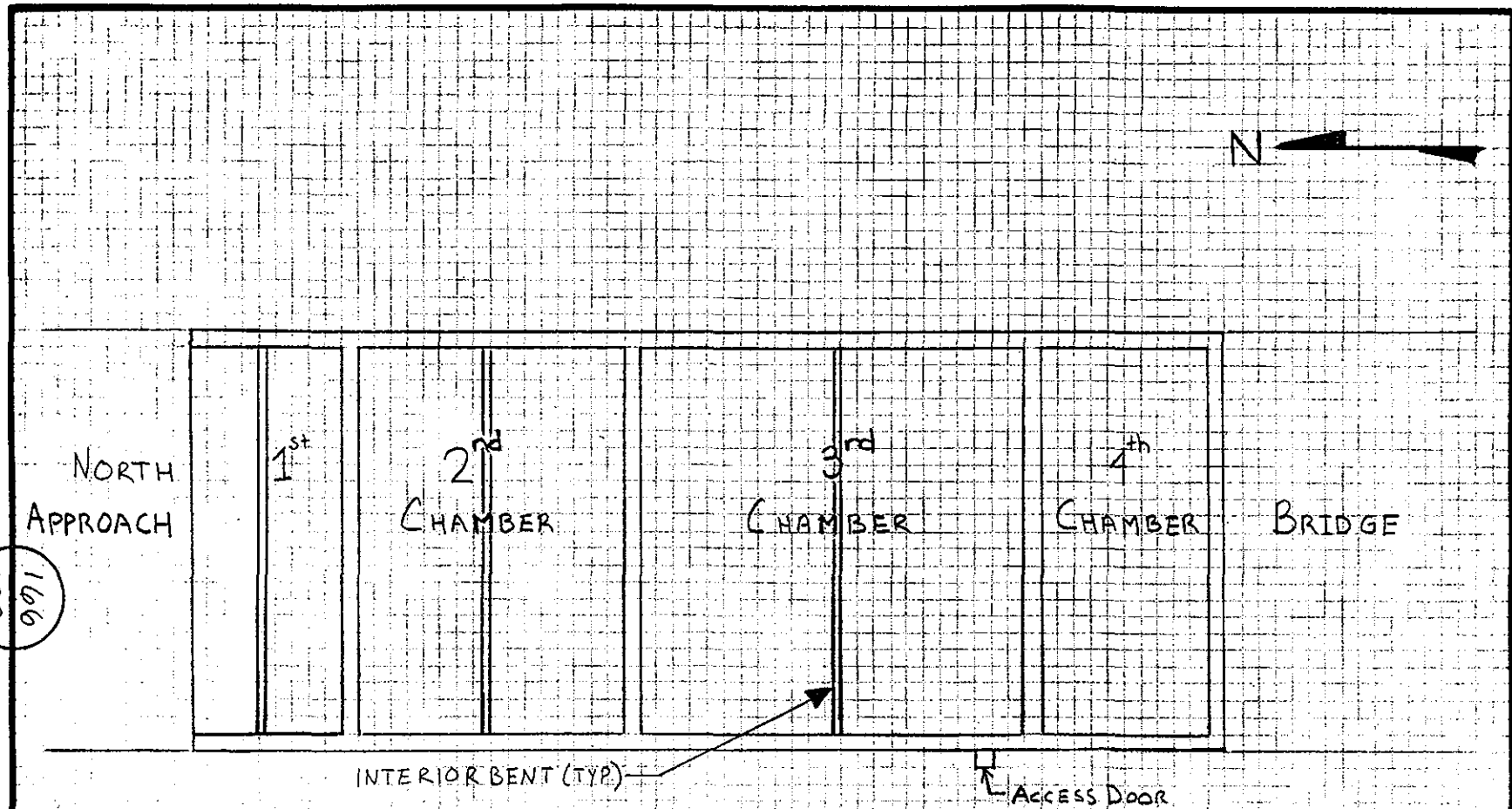

PLAN VIEW - INTERIOR CHAMBERS - NORTH ABUTMENT

FIELD NOTES EL	JOB NO. 1986-06	BRIDGE NO. Sagamore
	DATE 4/9/01	SHEET 12 of 14
PREPARED BY: LICHTENSTEIN	CREW SD	

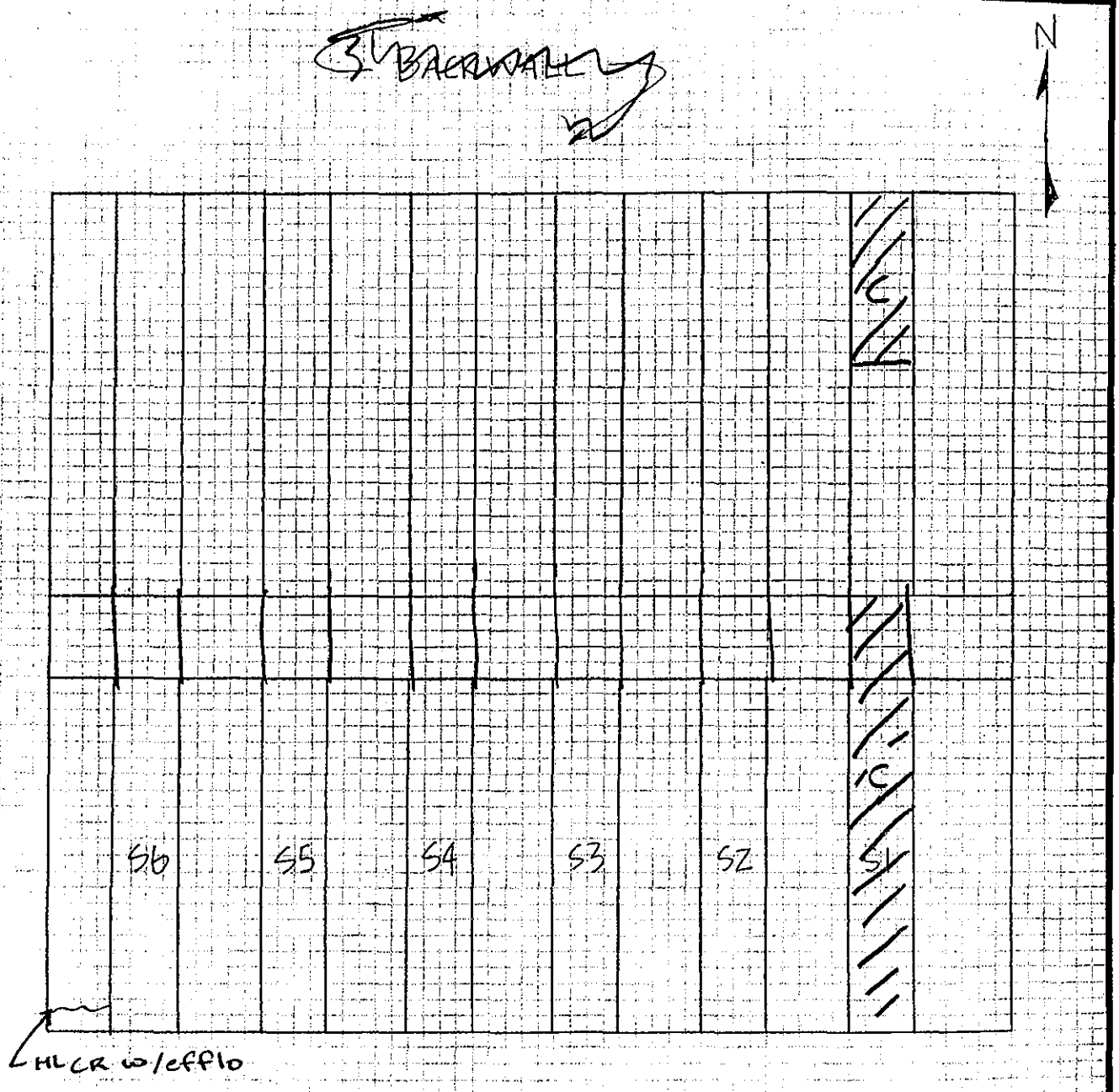

= coated surface

N. ABUT - CHAMBER 4
UNDERSIDE OF DECK

FIELD NOTES

EL

JOB NO. 1986-06	BRIDGE NO. Sagamore	
DATE 4/9/01	SHEET 9 of 14	
PREPARED BY: LICHTENSTEIN	CREW SD	

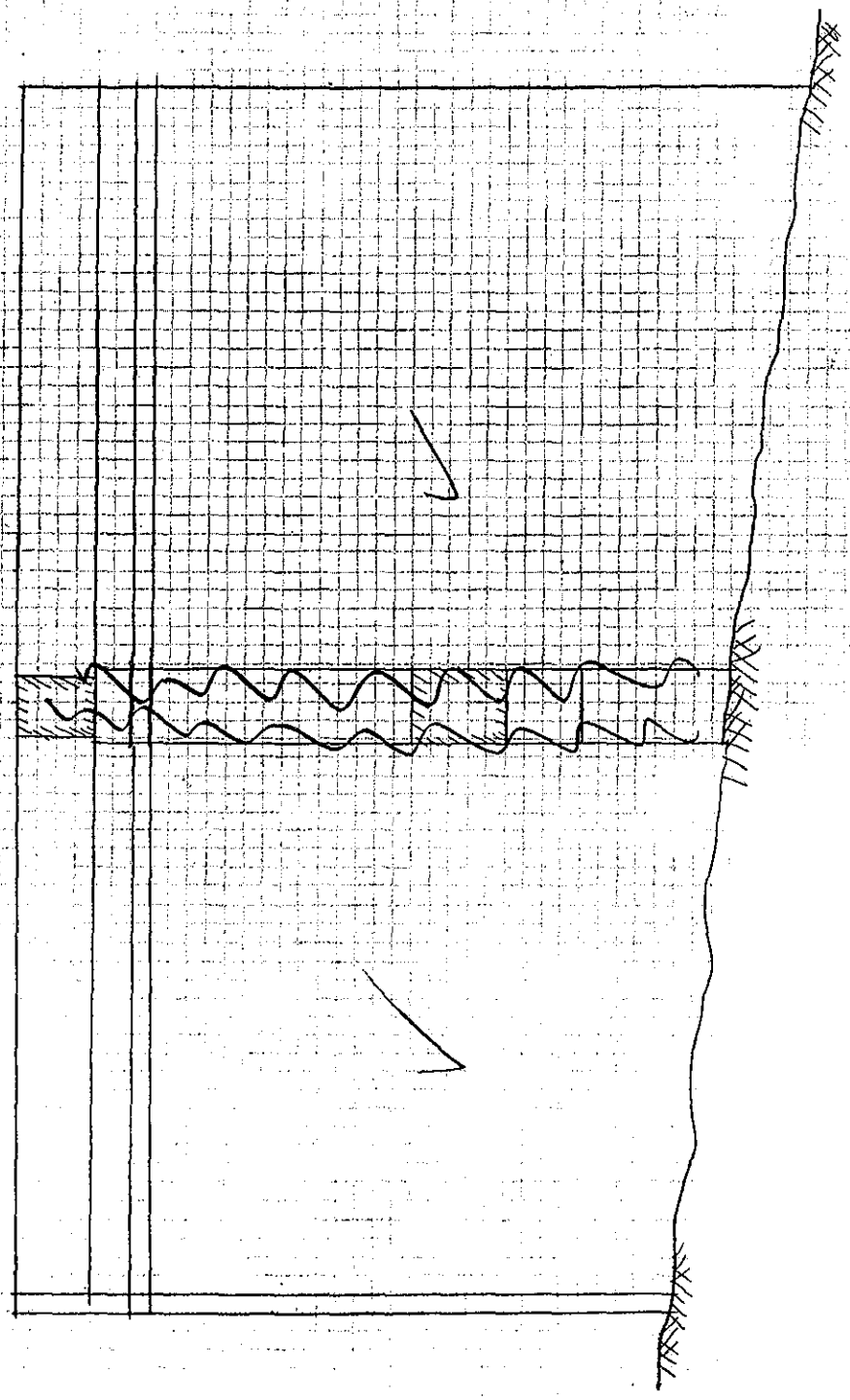

Chamber 4
West Wall
East. Elev.
VIEWING
NORTH ABUT. (INT.)

FIELD NOTES

EL

PREPARED BY: LICHTENSTEIN	JOB NO. 1986-06	BRIDGE NO. Sagamore
	DATE 4/9/01	SHEET 8 of 14
	CREW SD	

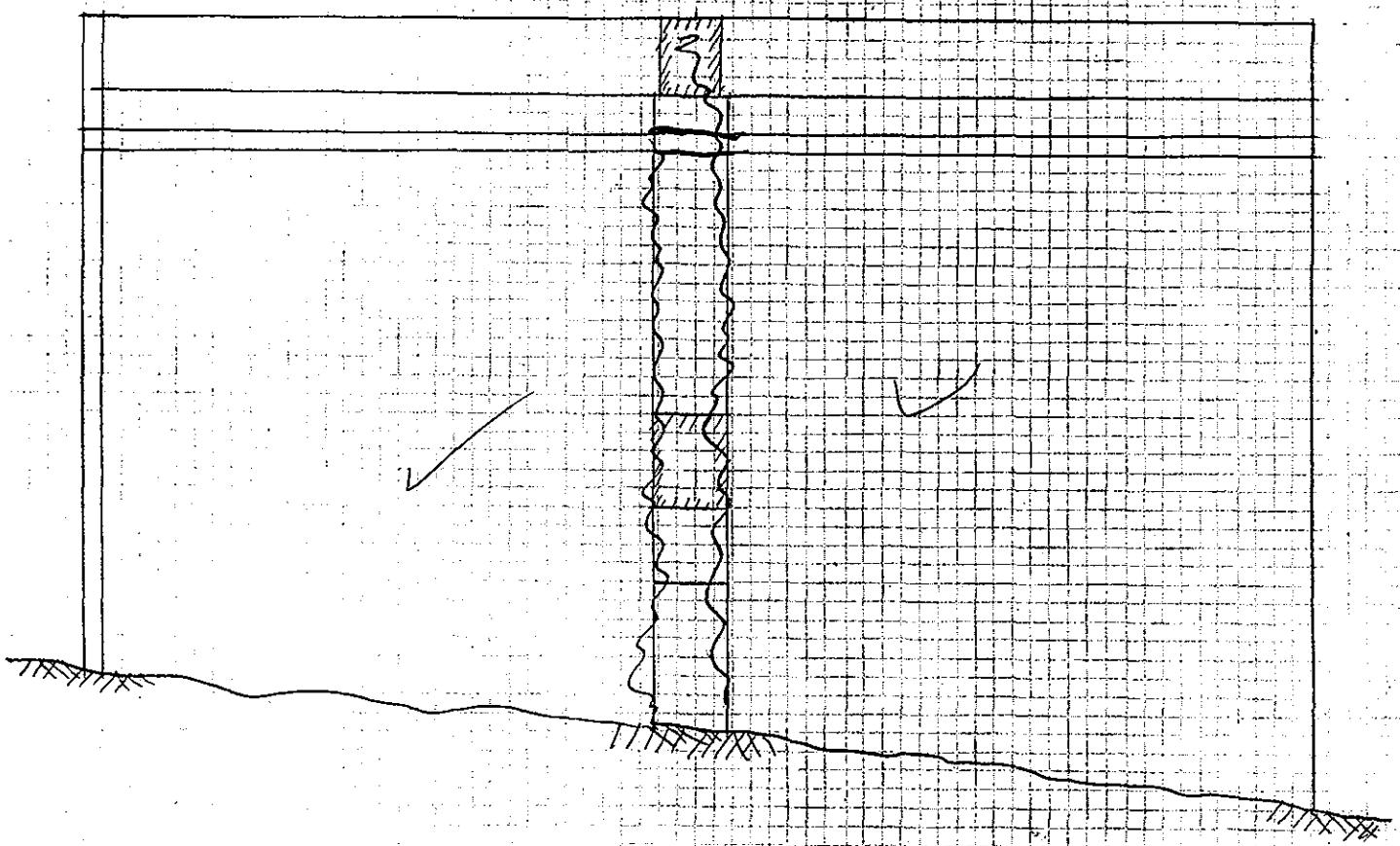

Chamber 4
East Wall
West Elev.

~~[illegible]~~

NORTH ABUT. (INT.)

FIELD NOTES EL	JOB NO. 1986-06	BRIDGE NO. Sagamore
	DATE 4/9/01	SHEET 11 of 14
PREPARED BY: LICHTENSTEIN	CREW SD	

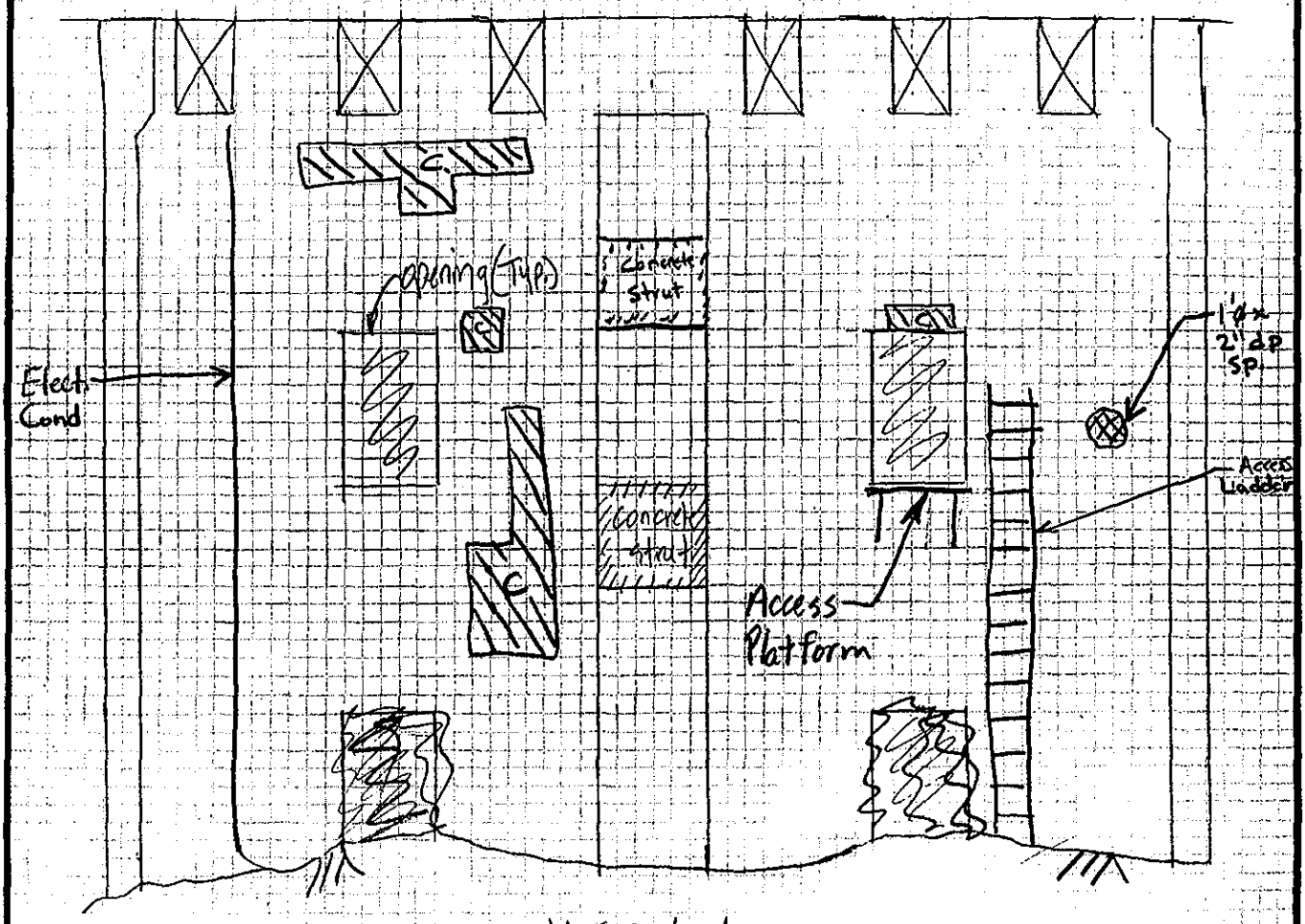

~~VIEW AA~~

Chamber 4
South Wall
N. Elev.

C = Coated Surface

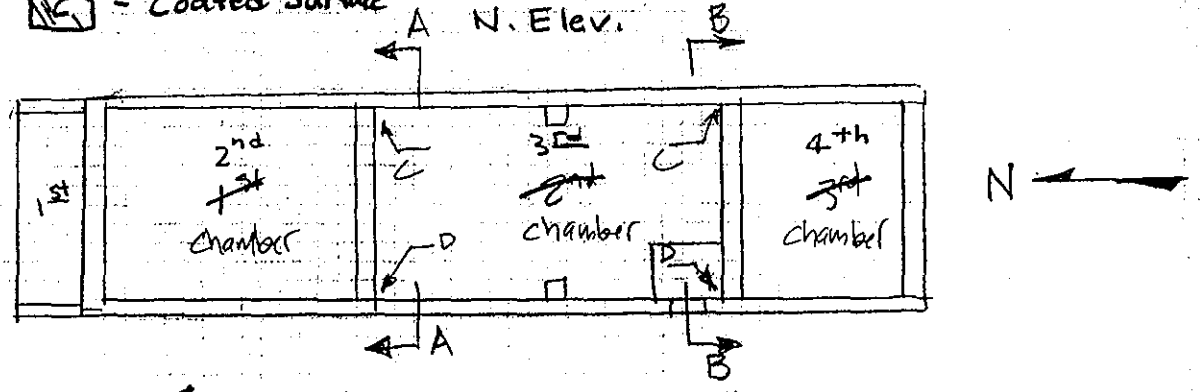

~~TRIPLE~~ CHAMBER - NORTH ABUTMENT
PLAN VIEW

FIELD NOTES EL	JOB NO. 1986-06	BRIDGE NO. Sagamore
	DATE 4/9/01	SHEET 10 of 14
PREPARED BY: LICHTENSTEIN	CREW SD	

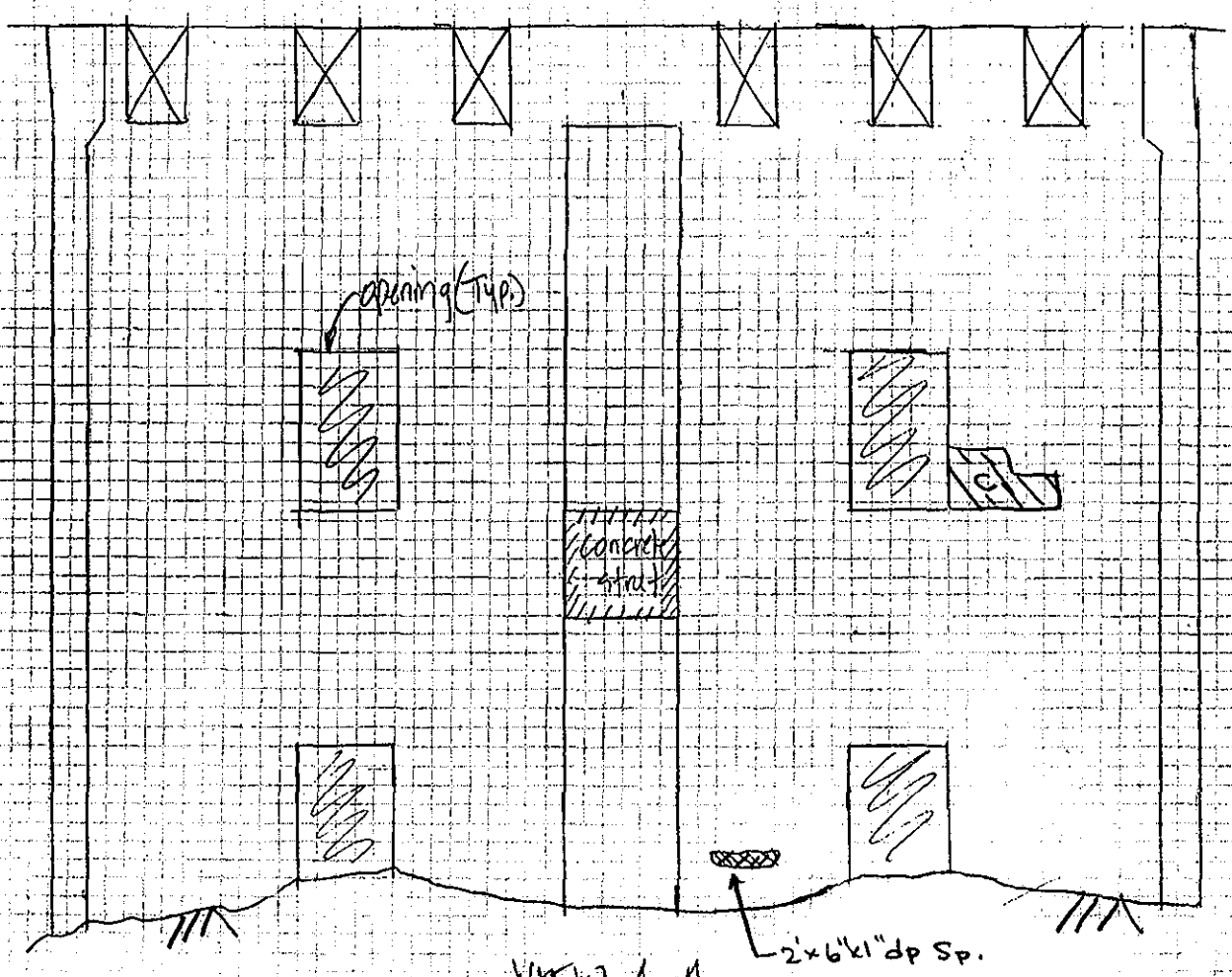

VIEW A-A

Chamber 4
North Wall
South Elev.

= Coated Surface

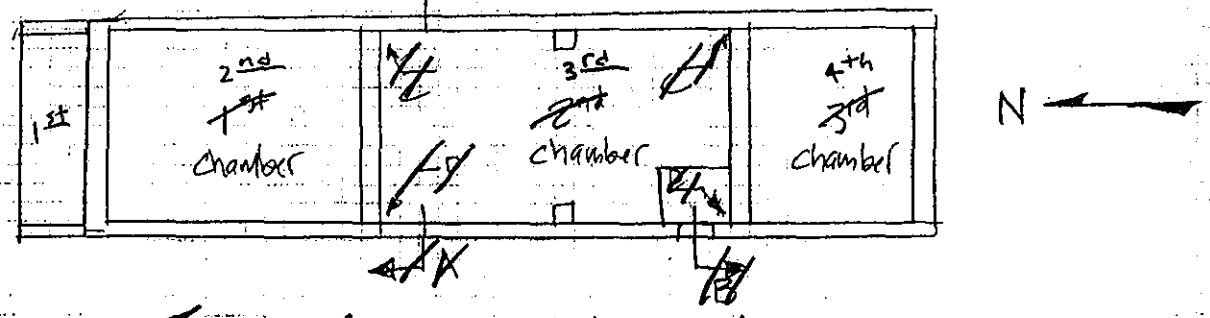

TRIPLE CHAMBER - NORTH ABUTMENT
PLAN VIEW

FIELD NOTES EL	JOB NO. 1986-06	BRIDGE NO. Sagamore
	DATE 4/9/01	SHEET 7 of 14
PREPARED BY: LICHTENSTEIN	CREW SD	

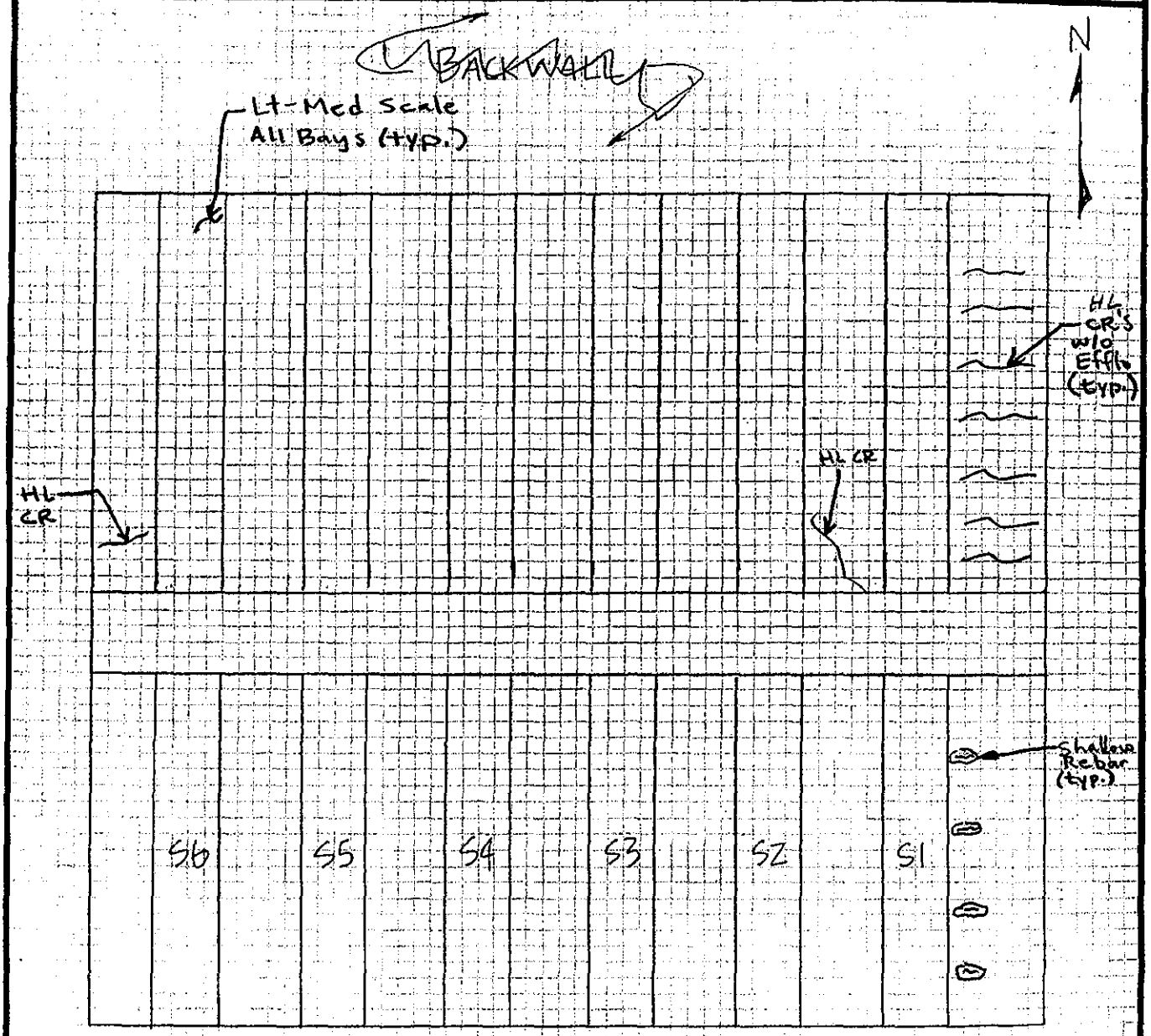

N. ABUT - CHAMBER #3

UNDERSIDE OF DECK

FIELD NOTES

EL

PREPARED BY: LICHTENSTEIN	JOB NO. 1986-06	BRIDGE NO. Sagamore
	DATE 4/9/01	SHEET 2 of 14
	CREW SD	

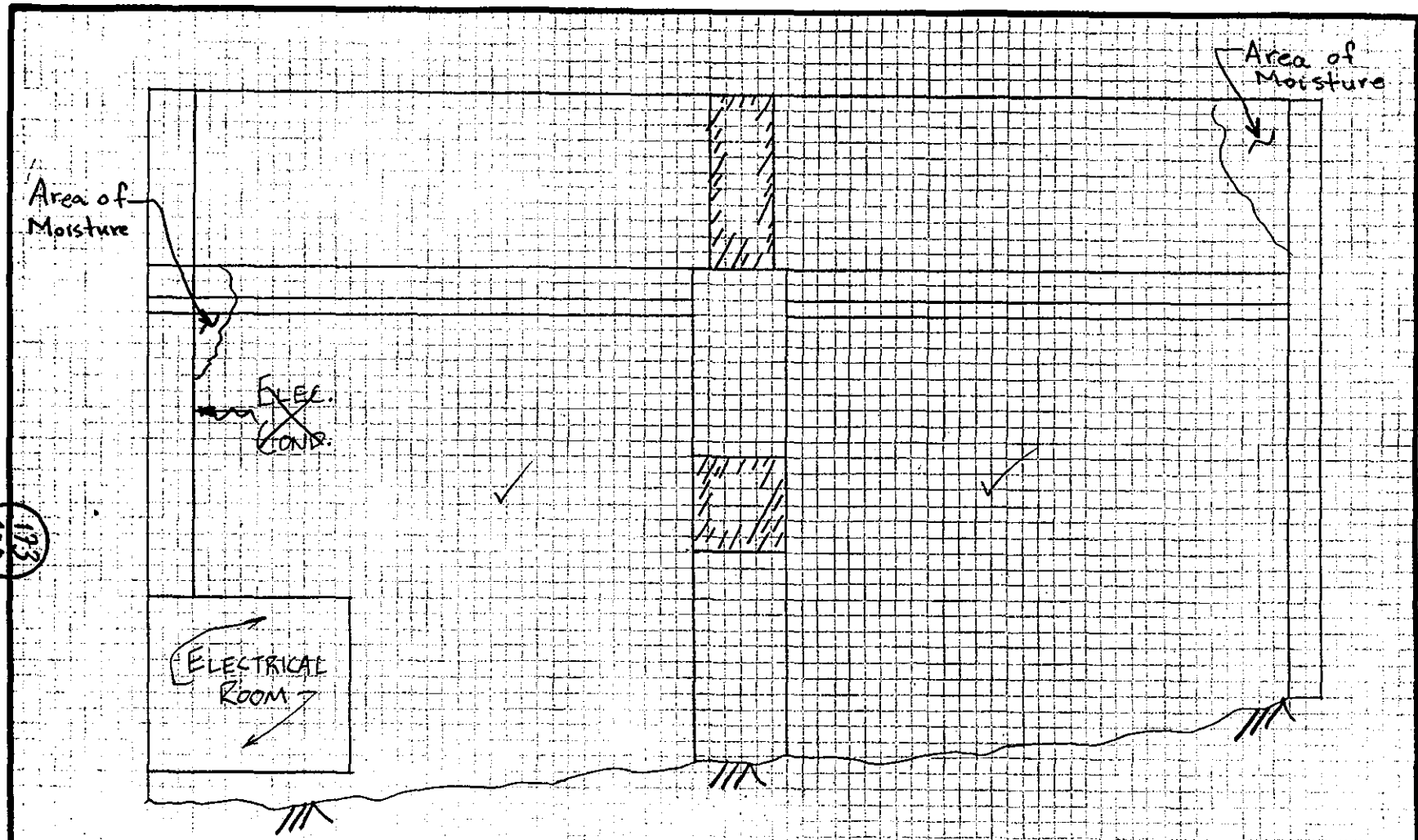

Chamber 3
West Wall
East Elev.

~~[illegible]~~

NORTH ABUT. (INT.)

FIELD NOTES

EL

PREPARED BY: LICHTENSTEIN	JOB NO. 1986-06	BRIDGE NO. Sagamore
	DATE 4/9/01	SHEET 3 of 14
	CREW SD	

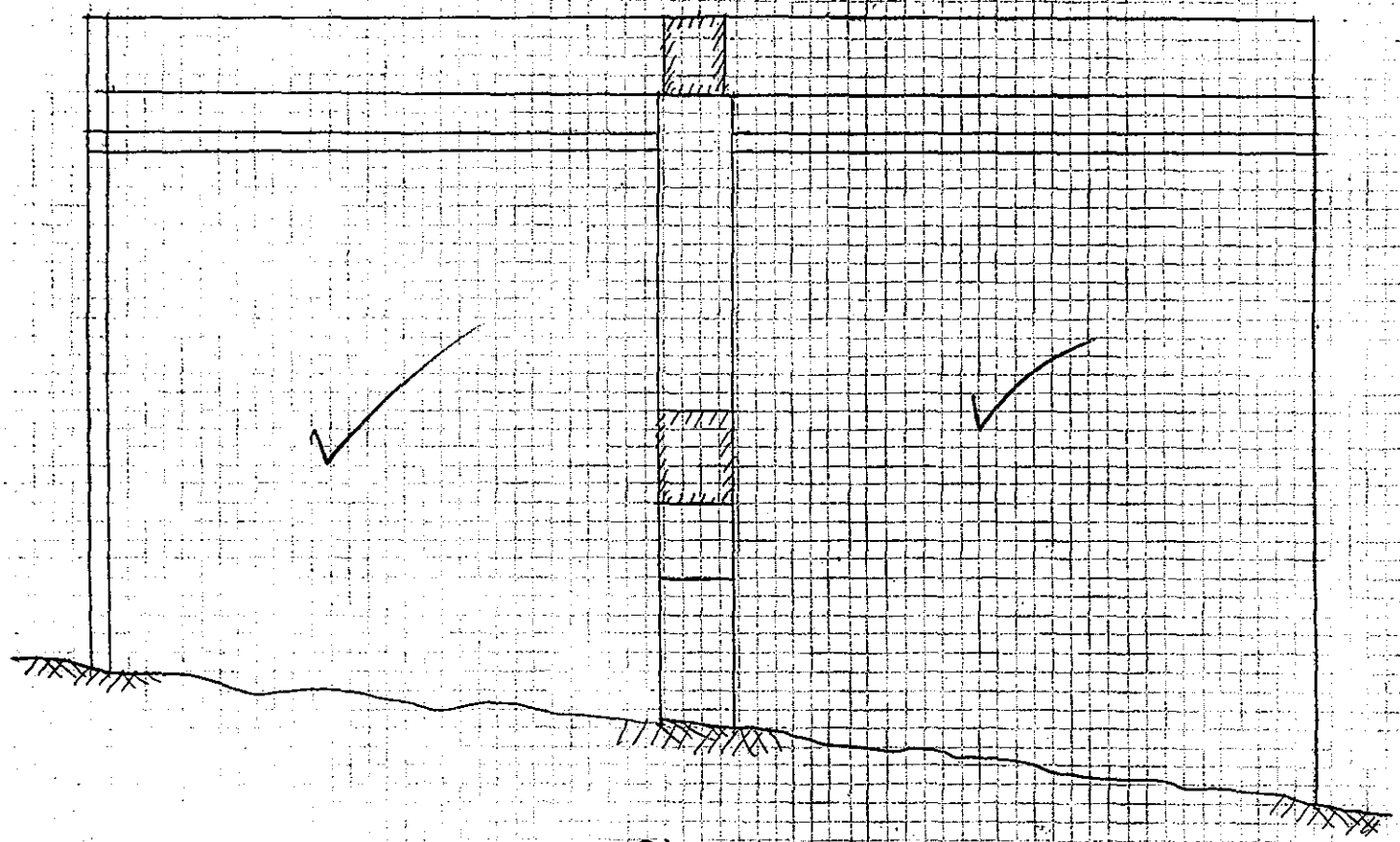

Chamber 3.
East Wall
West Elev.

~~VIEW FROM~~
NORTH ABUT. (INT.)

194
199

FIELD NOTES

EL

PREPARED BY: LICHTENSTEIN	JOB NO. 1986-06	BRIDGE NO. Sagamore
	DATE 4/9/01	SHEET 4 of 14
	CREW SD	

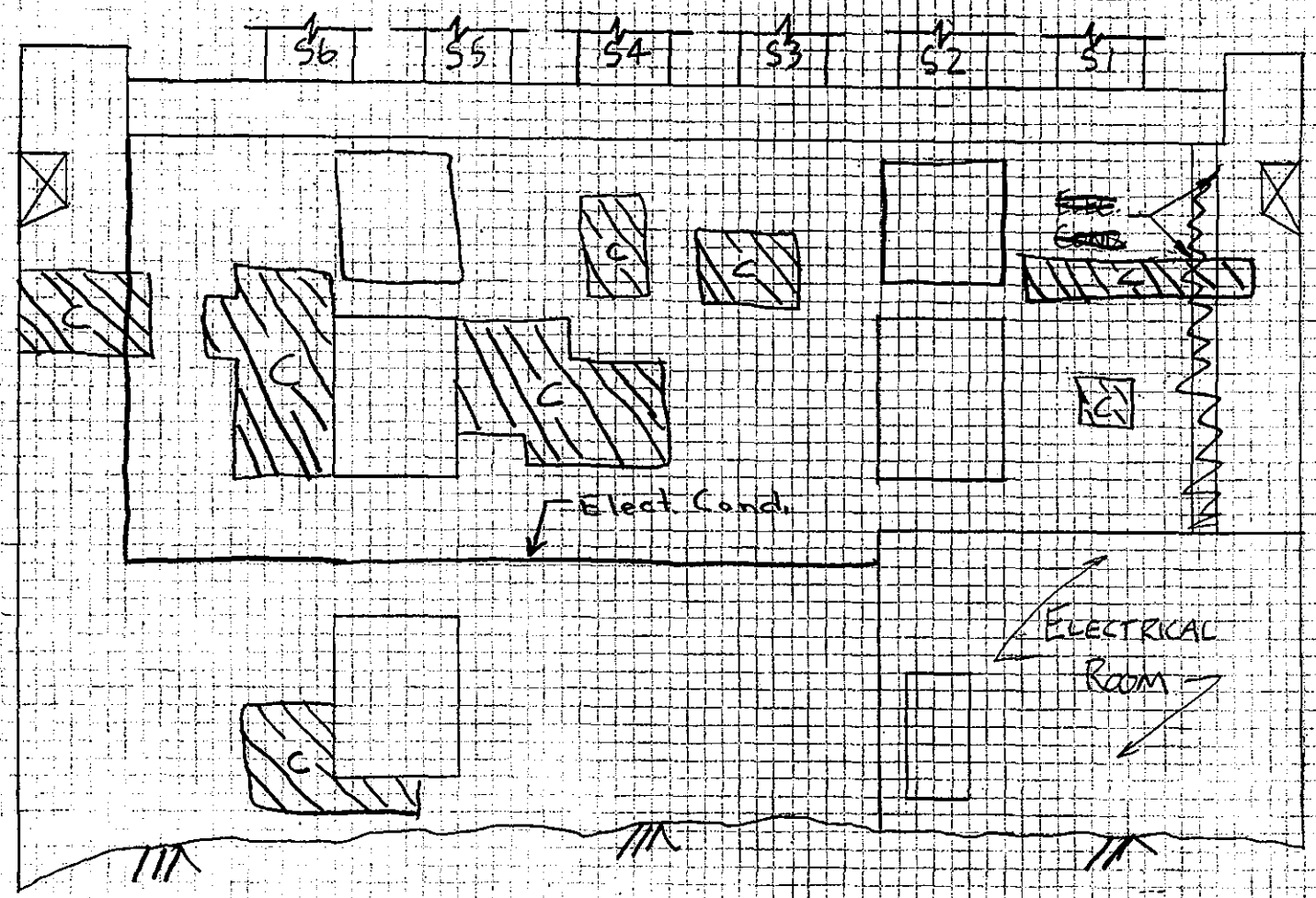

Chamber 3
South Wall
N. Elev.

C = Coated Surface

NORTH ABUT - (INT.)

175
133

FIELD NOTES EL	JOB NO. 1986-06	BRIDGE NO. Sagamore
	DATE 4/9/01	SHEET 5 of 14
PREPARED BY: LICHTENSTEIN	CREW SD	

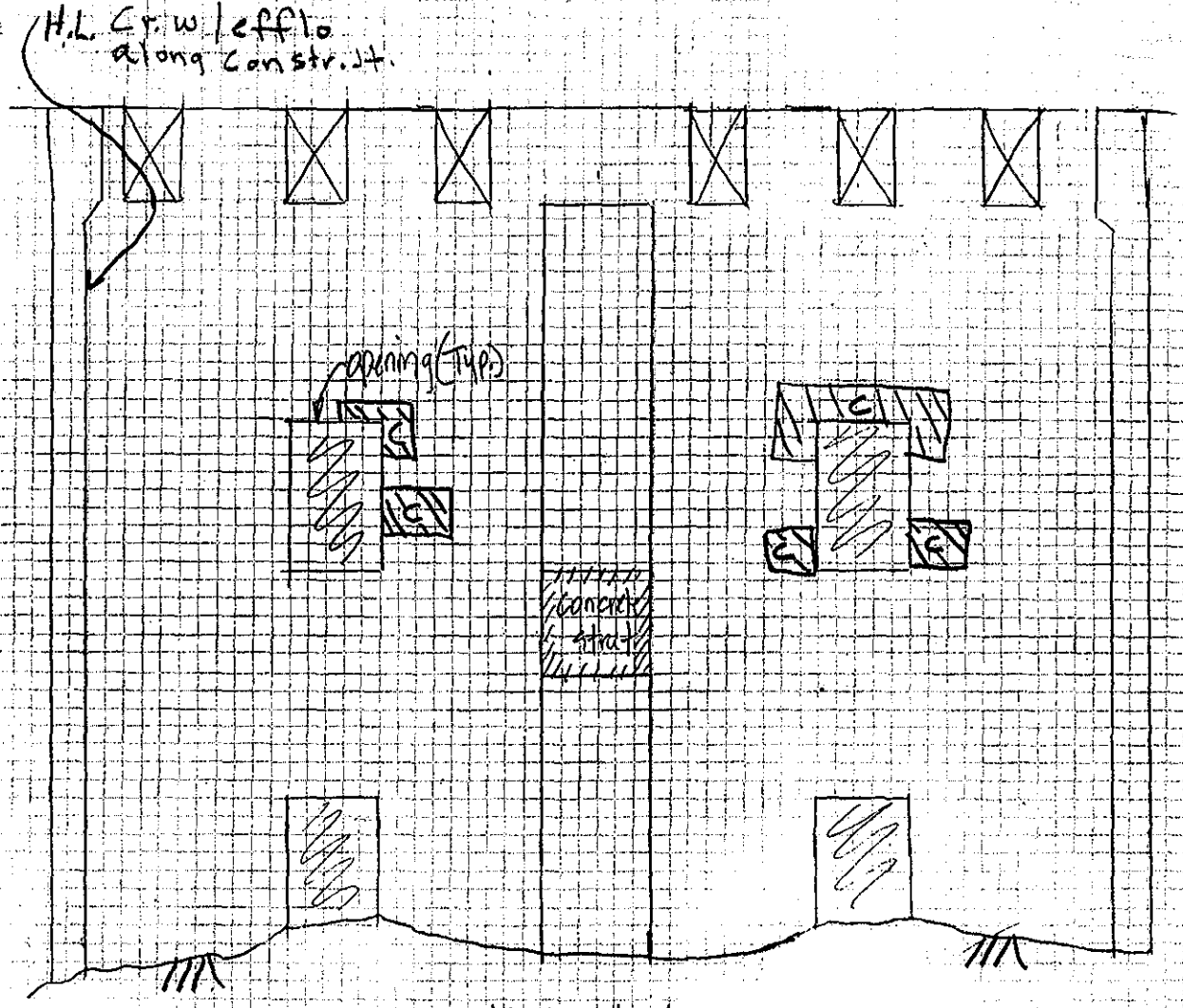

Chamber 3
N. Wall
S. Elev.

C = Coated Surface

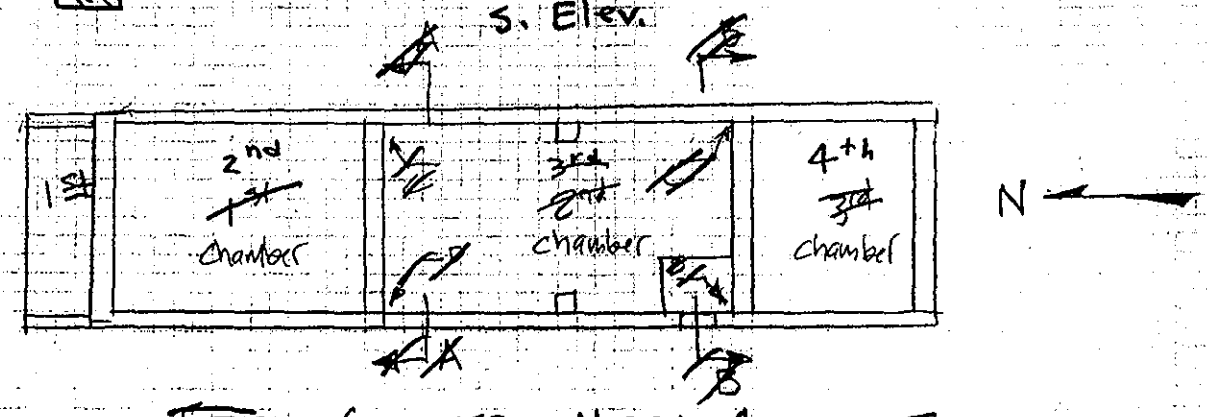

~~TRIPLE~~ CHAMBER - NORTH ABUTMENT
PLAN VIEW

FIELD NOTES EL	JOB NO. 1986-06	BRIDGE NO. Sagamore
	DATE 4/9/01	SHEET 6 of 14
PREPARED BY: LICHTENSTEIN	CREW SD	

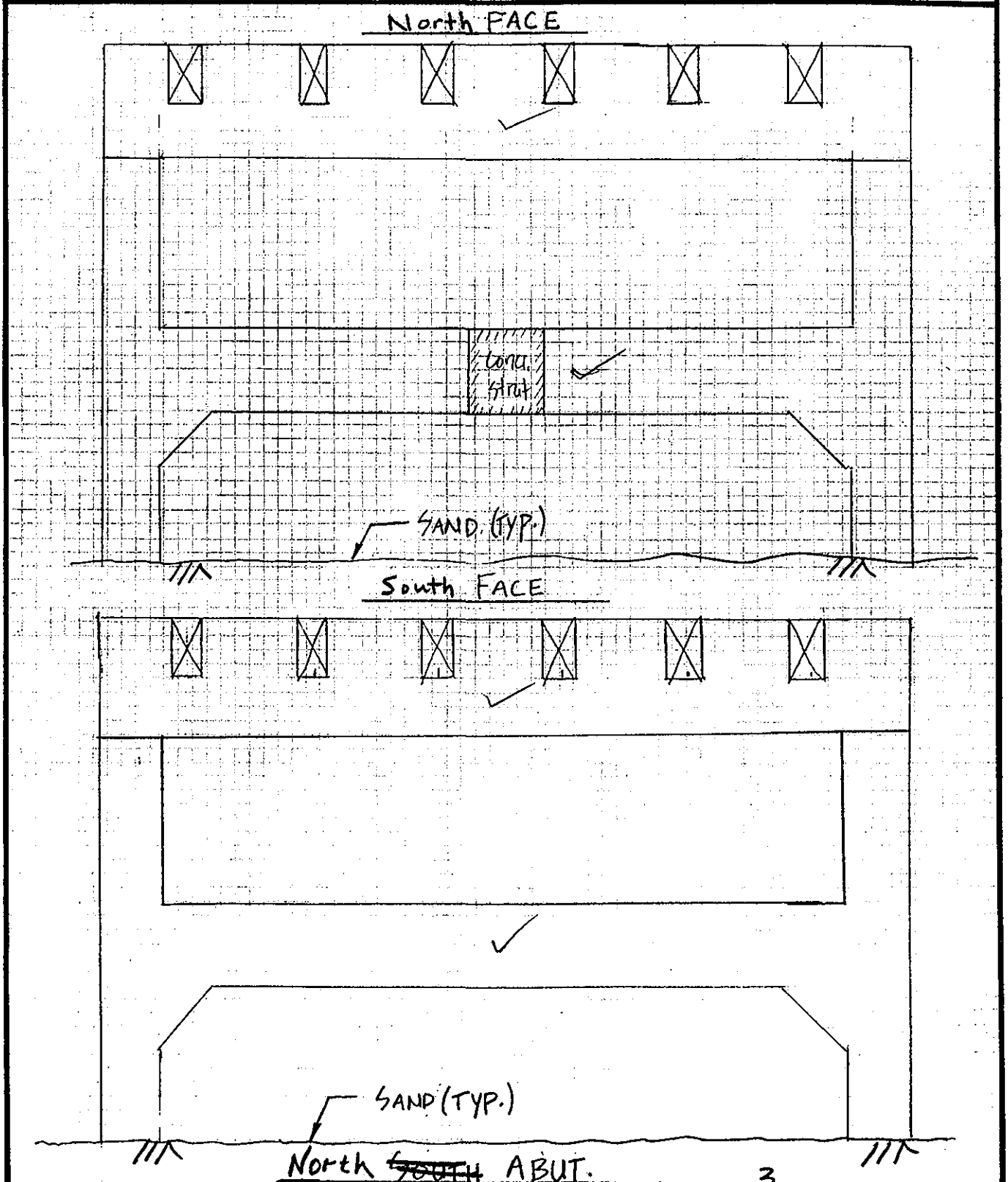

North ~~SOUTH~~ ABUT.

CENTER BEAM SUPPORT - CHAMBER ~~4~~ 3

FIELD NOTES

EL

JOB NO. 1986-06	BRIDGE NO. Sagamore	
DATE 4/5/01	SHEET 7 of 11	
PREPARED BY: LICHTENSTEIN	CREW SD	

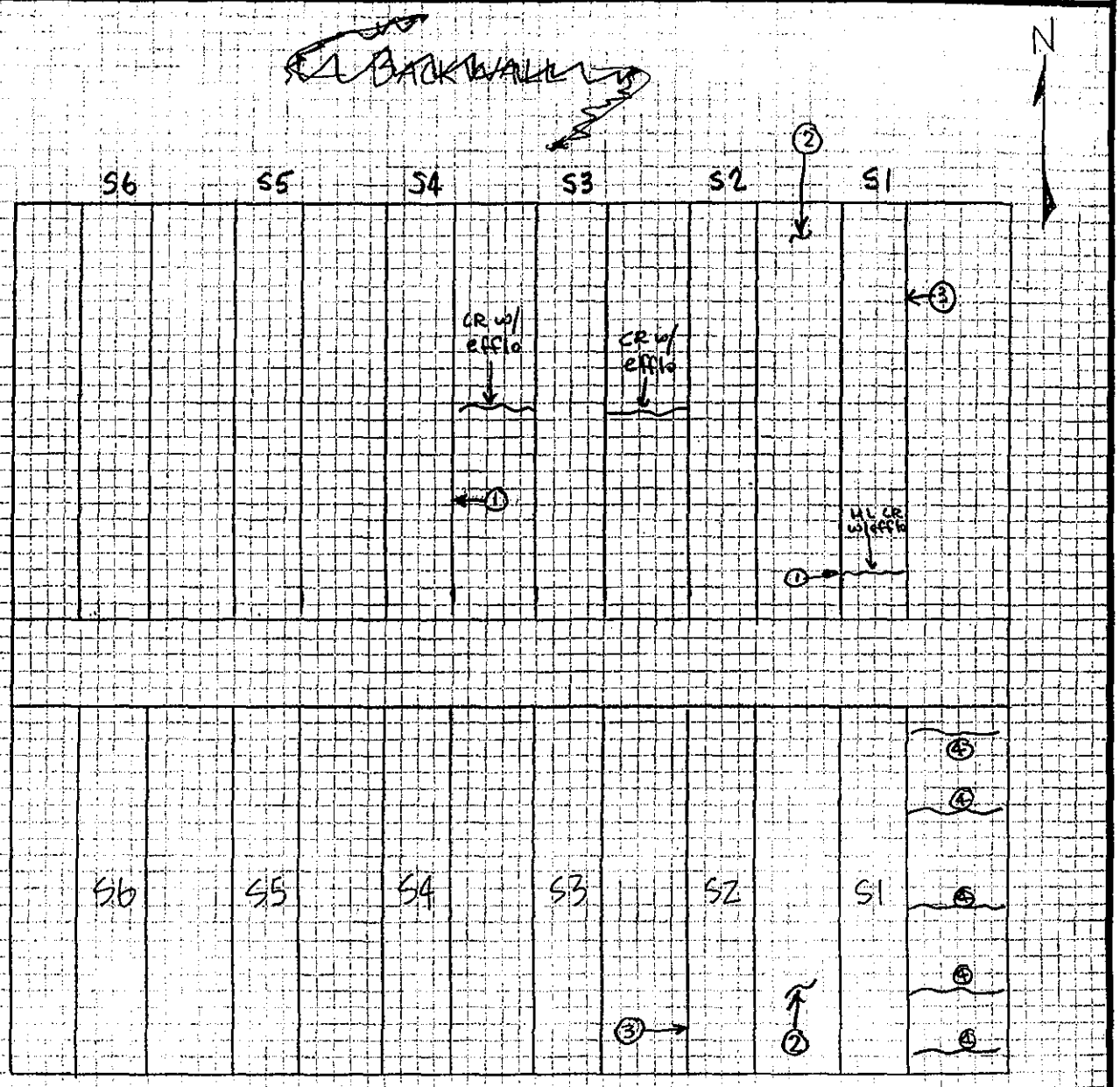

① FH HL CR w/ Efflo

② Typ. Cond. - w/s of deck has areas of Lt-med scale & map cracking with & without efflo

③ Typ. Cond. - East & West Faces of beams have 10%-50% of Area w/Lt scaling.

④ HL CR w/ efflo

N. ABUT + CHAMBER #2

UNDERSIDE OF DECK

FIELD NOTES

EL

PREPARED BY: LICHTENSTEIN	JOB NO. 1986-06	BRIDGE NO. Sagamore
	DATE 4/9/01	SHEET 1 of 14
	CREW SD	

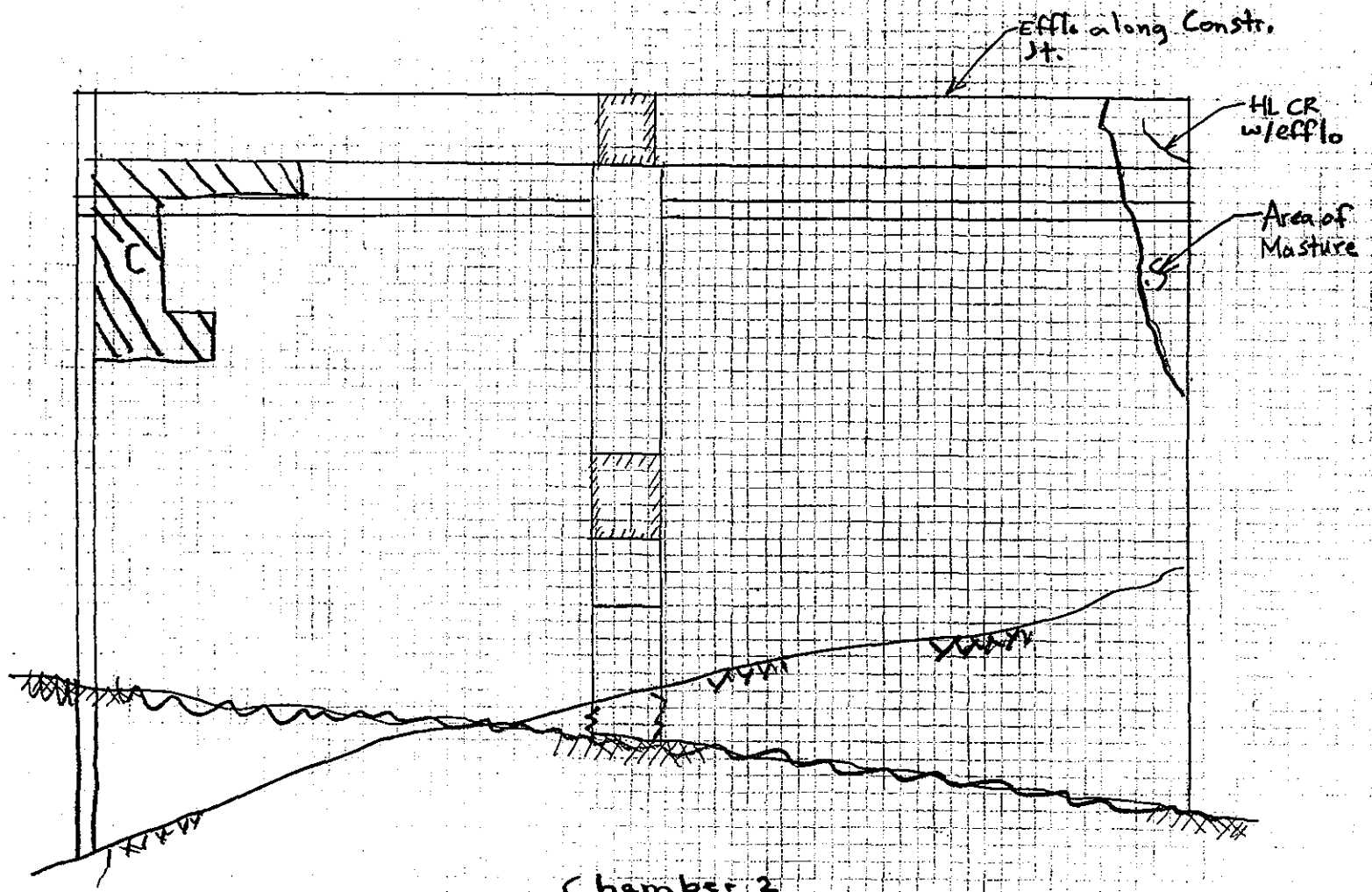

Chamber 2
West Wall
East Elev.

= Coated Surface

~~VIEW C-C~~

NORTH ABUT. (INT.)

FIELD NOTES

PREPARED BY: LICHTENSTEIN	JOB NO. 1986-06	BRIDGE NO. Sagamore
EL	DATE 4/5/01	SHEET 8 of 11
	CREW SD	

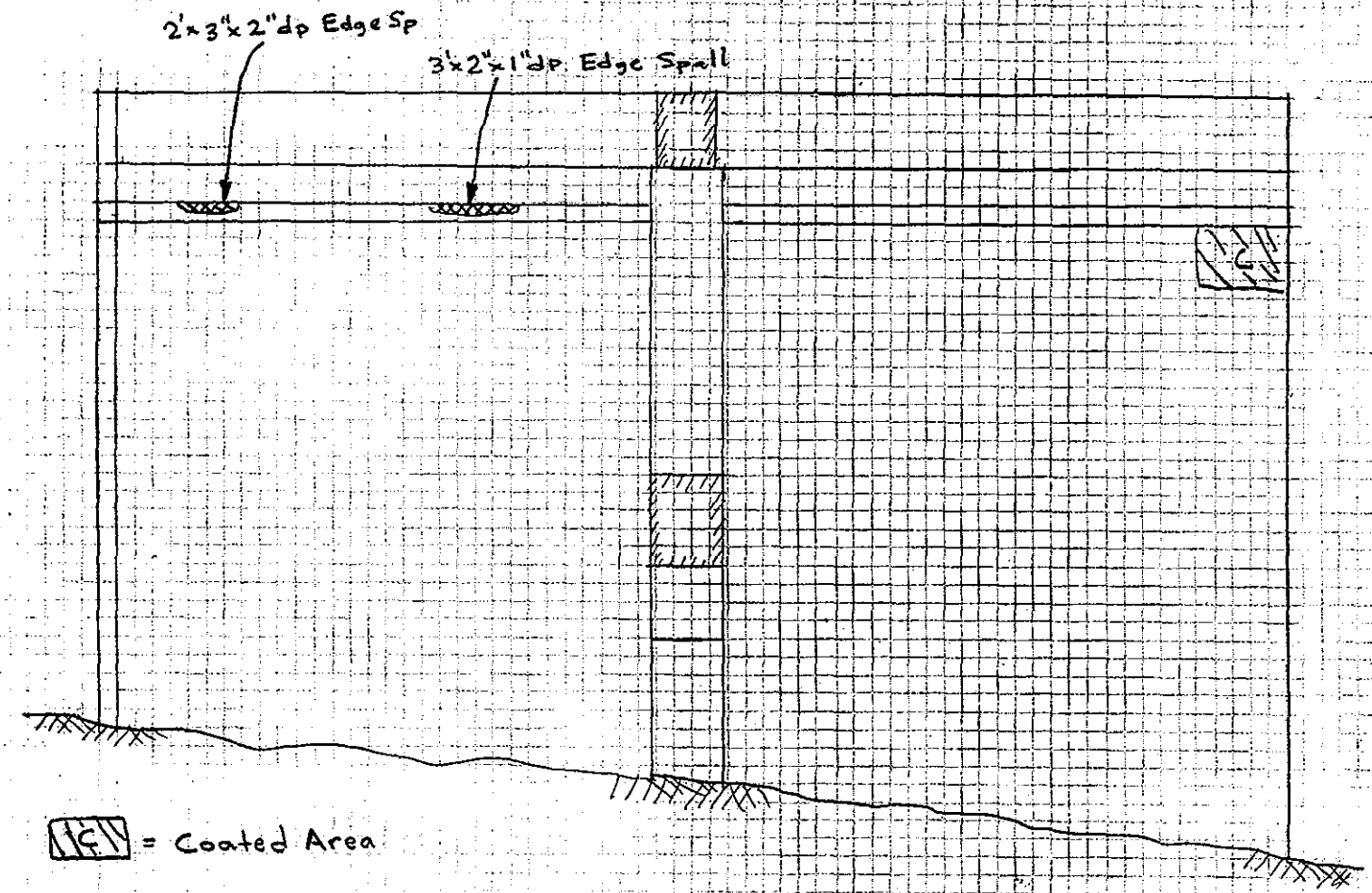

~~VIEW C-C~~

NORTH ABUT. (INT.)

Chamber 2
East Wall
West Elev.

FIELD NOTES EL	JOB NO. 1986-06	BRIDGE NO. Sagamore
	DATE 4/5/01	SHEET 11 of 11
PREPARED BY: LICHTENSTEIN	CREW SD	

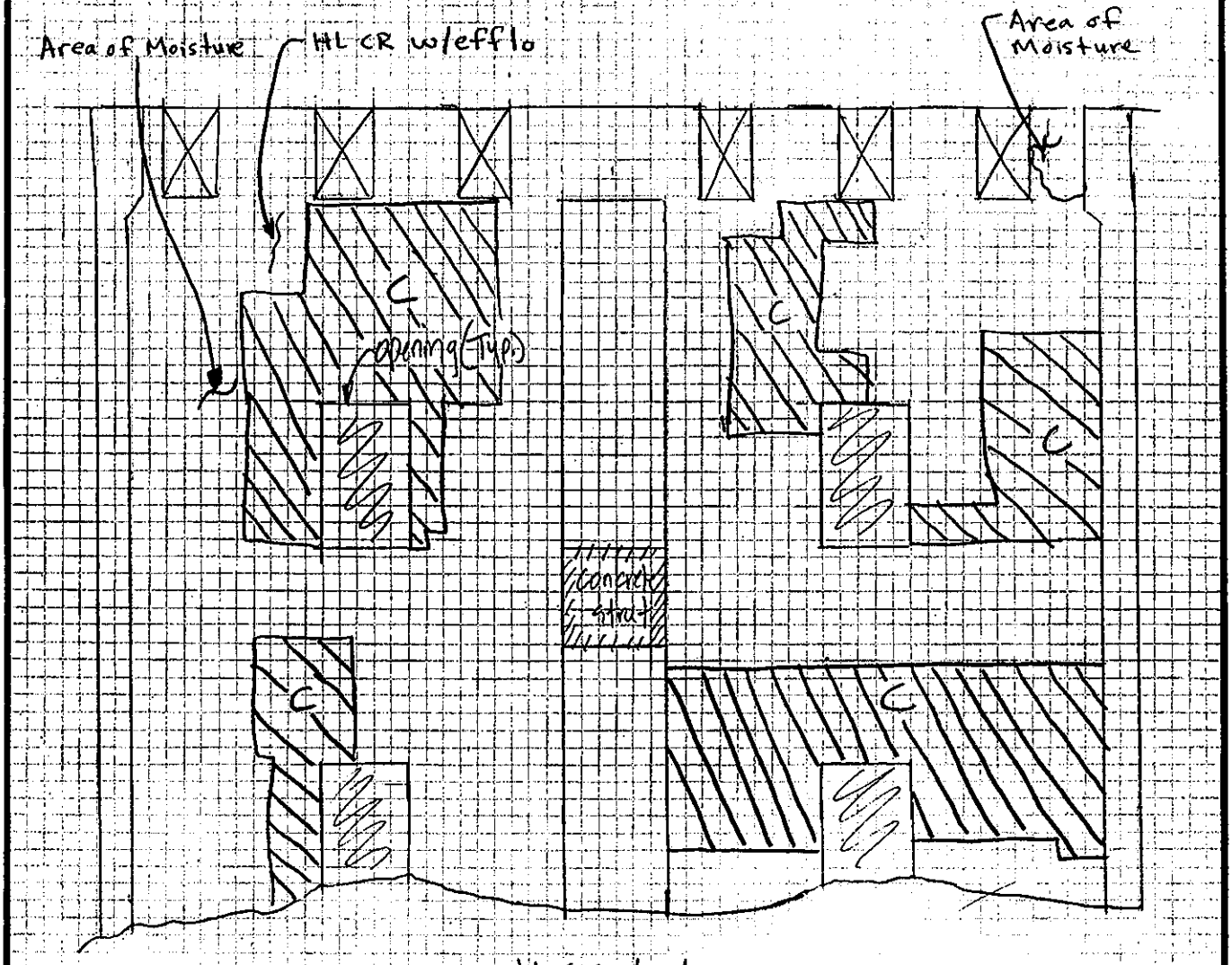

~~VIEW A-A~~

Chamber 2
South Wall
N. Elev

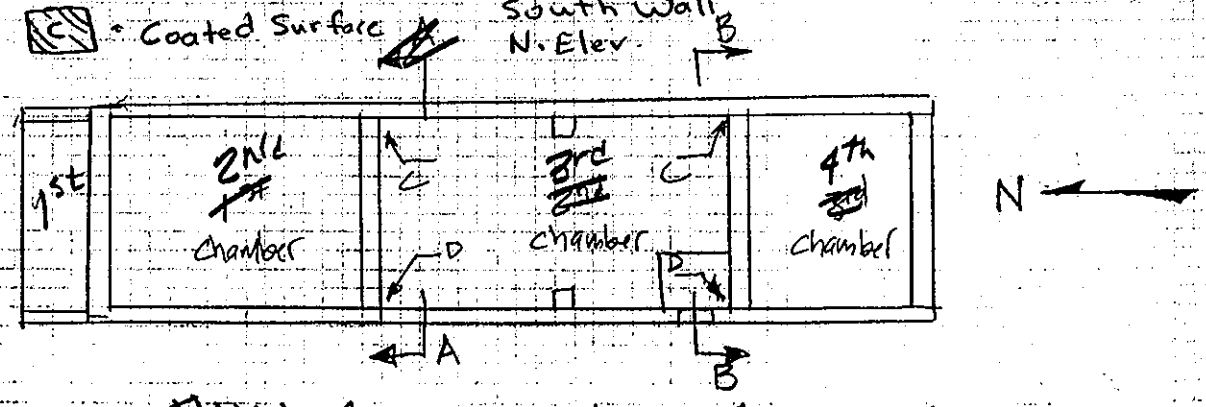

~~TYPICAL~~ CHAMBER - NORTH ABUTMENT
PLAN VIEW

FIELD NOTES EL	JOB NO. 1986-06	BRIDGE NO. Sagamore
	DATE 4/5/01	SHEET 9 of 11
PREPARED BY: LICHTENSTEIN	CREW SD	

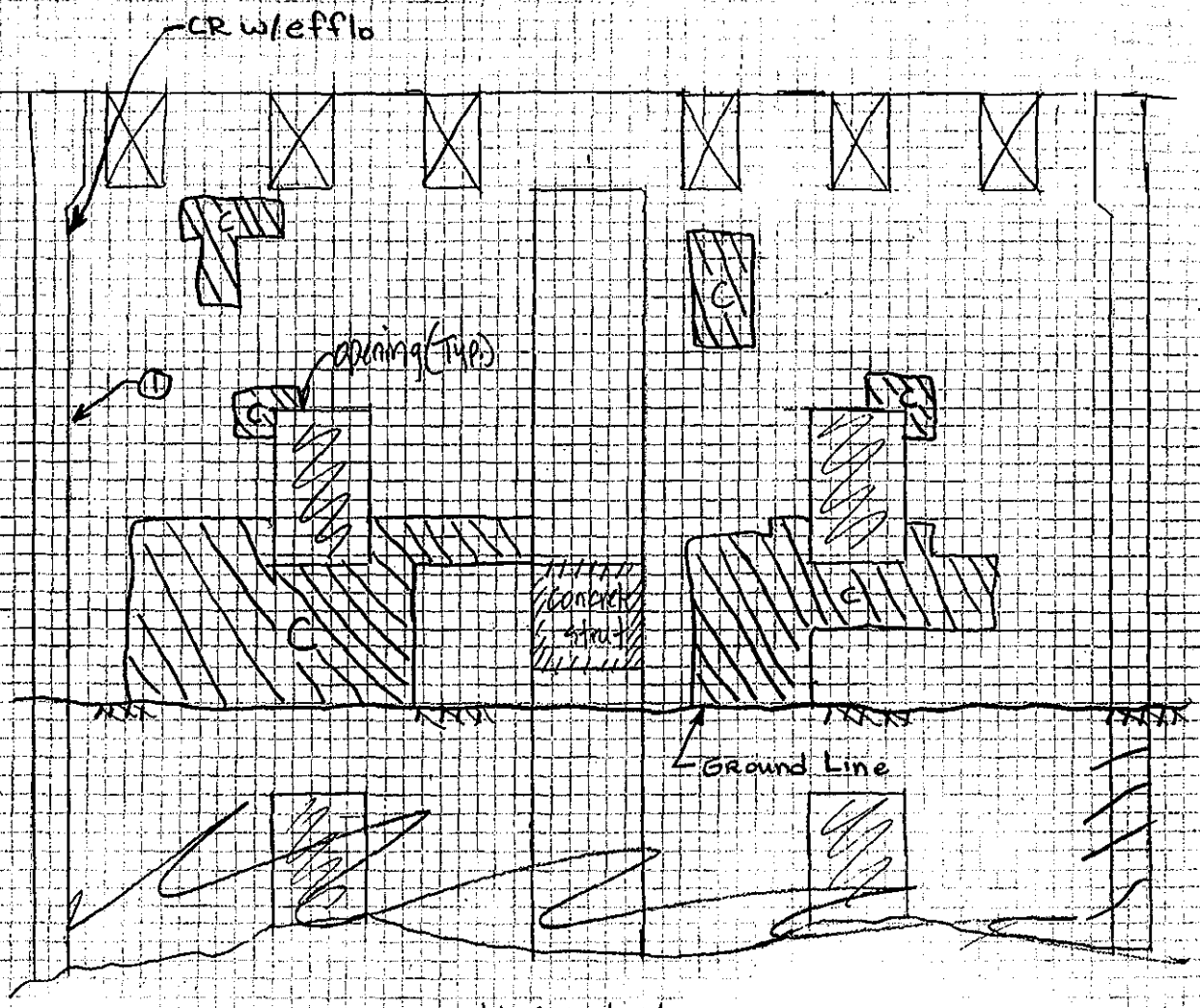

~~Wall A-A~~
Chamber 2
North Wall
South Elev.

C = Coated Area
① Area of Moisture

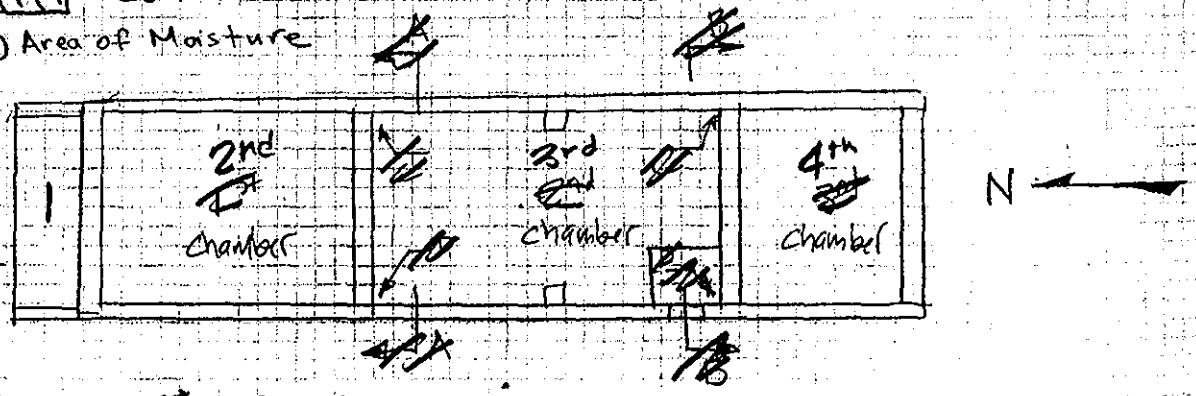

~~Typical~~ CHAMBER - NORTH ABUTMENT
PLAN VIEW

FIELD NOTES EL	JOB NO. 1986-06	BRIDGE NO. Sagamore
	DATE 4/5/01	SHEET 10 of 11
PREPARED BY: LICHTENSTEIN	CREW SD	

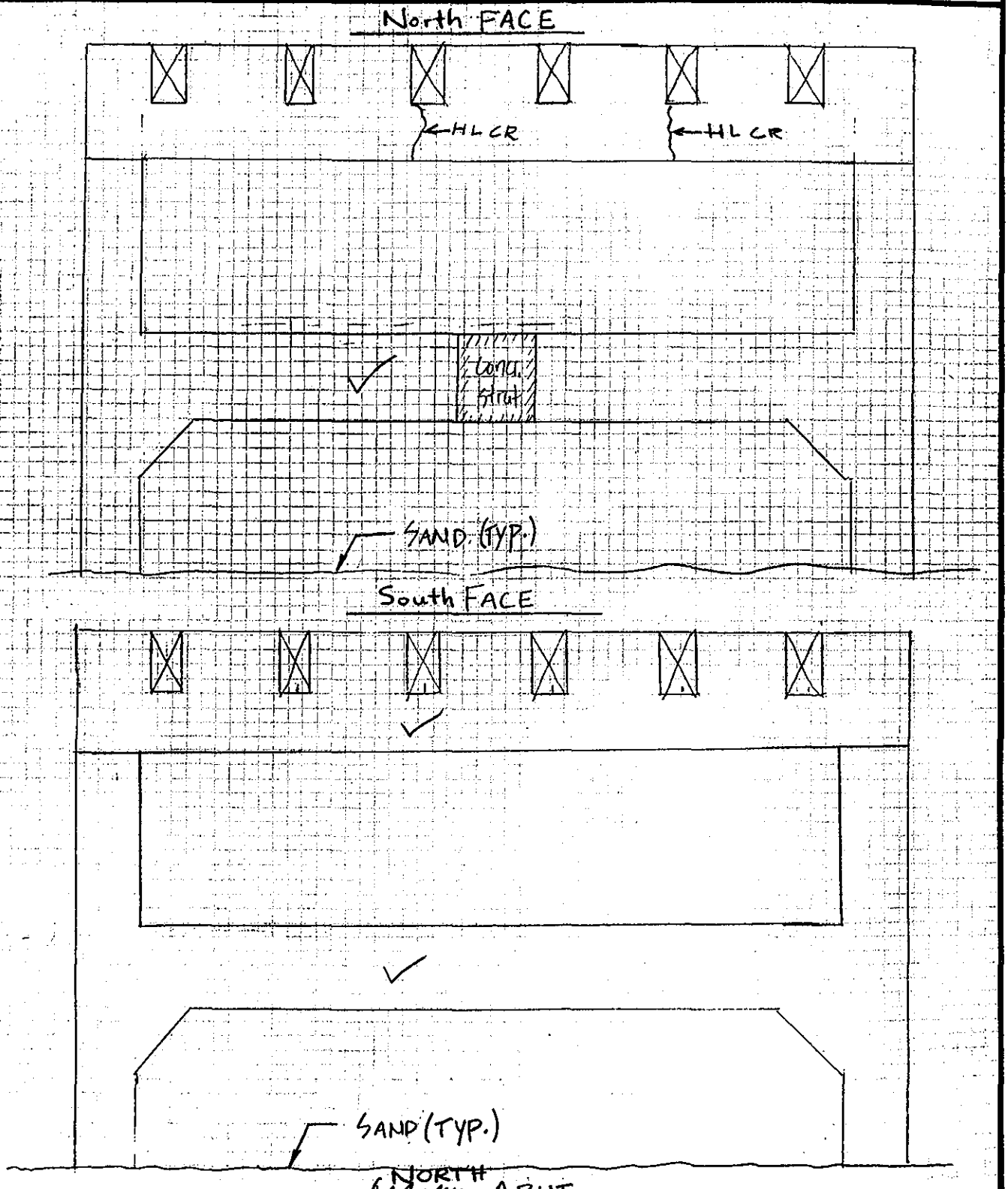

~~South~~ NORTH ABUT.

CENTER BEAM SUPPORT - CHAMBER 2

FIELD NOTES

	JOB NO. 1986-06	BRIDGE NO. Sagamore
EL	DATE 4/5/01	SHEET 5 of 11
PREPARED BY: LICHTENSTEIN	CREW SD	

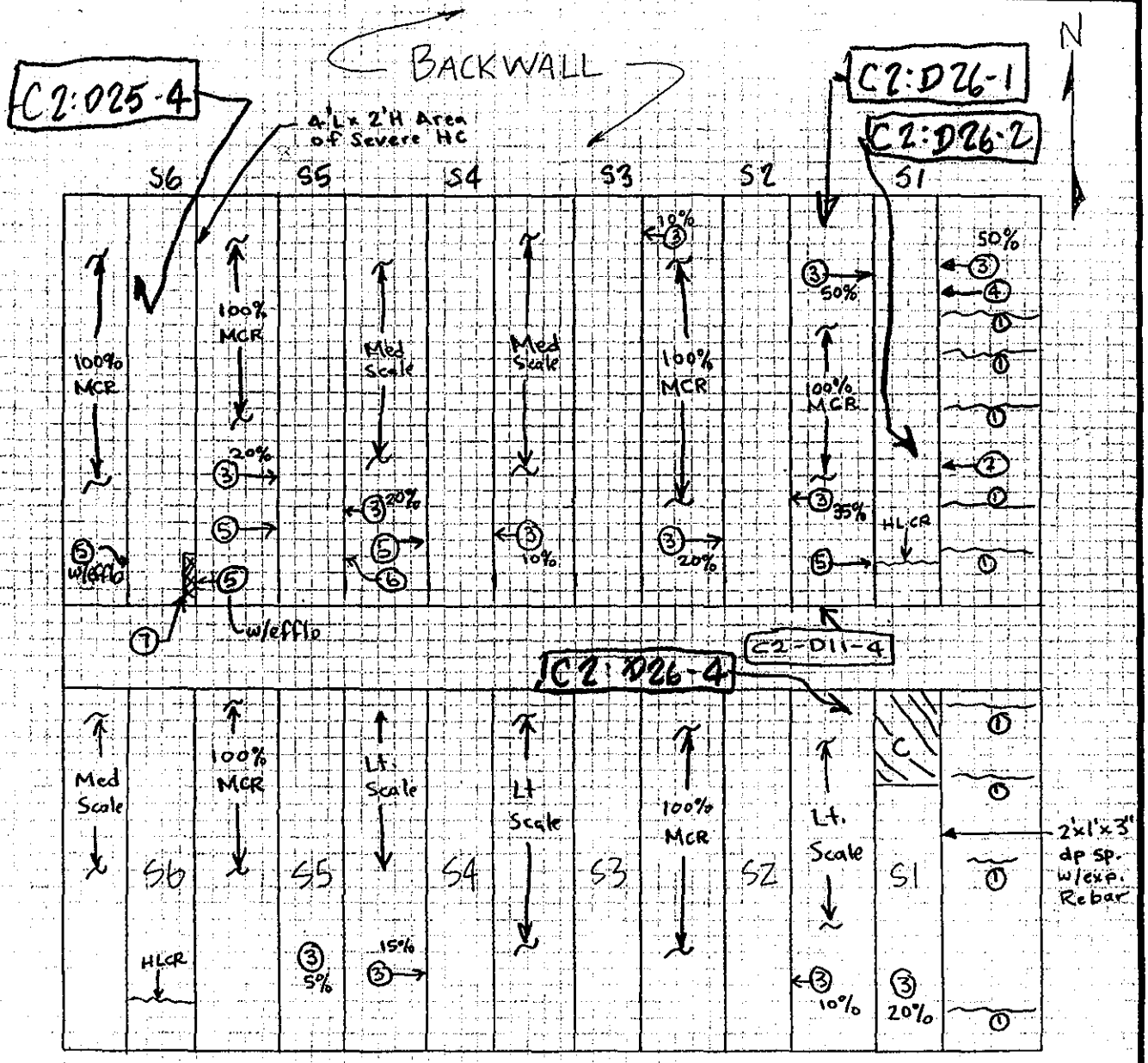

C = Coated Surface

1. HL CR w/ Efflo
2. 6'L x 1'H patch
3. Lt-Med Scale w/ % of face as noted.
4. Efflo along horiz. Construction joint.
5. F.H. HL CR
6. 18"x6"x1" dp Spall
7. 2'x6"x1/2" dp sp. w/ exposed Rebar & efflo. C2-D11-3

N. ABUT - CHAMBER 1

UNDERSIDE OF DECK

FIELD NOTES

EL

PREPARED BY: LICHTENSTEIN	JOB NO. 1986-06	BRIDGE NO. Sagamore
CREW SD	DATE 4/5/01	SHEET 2 of 11

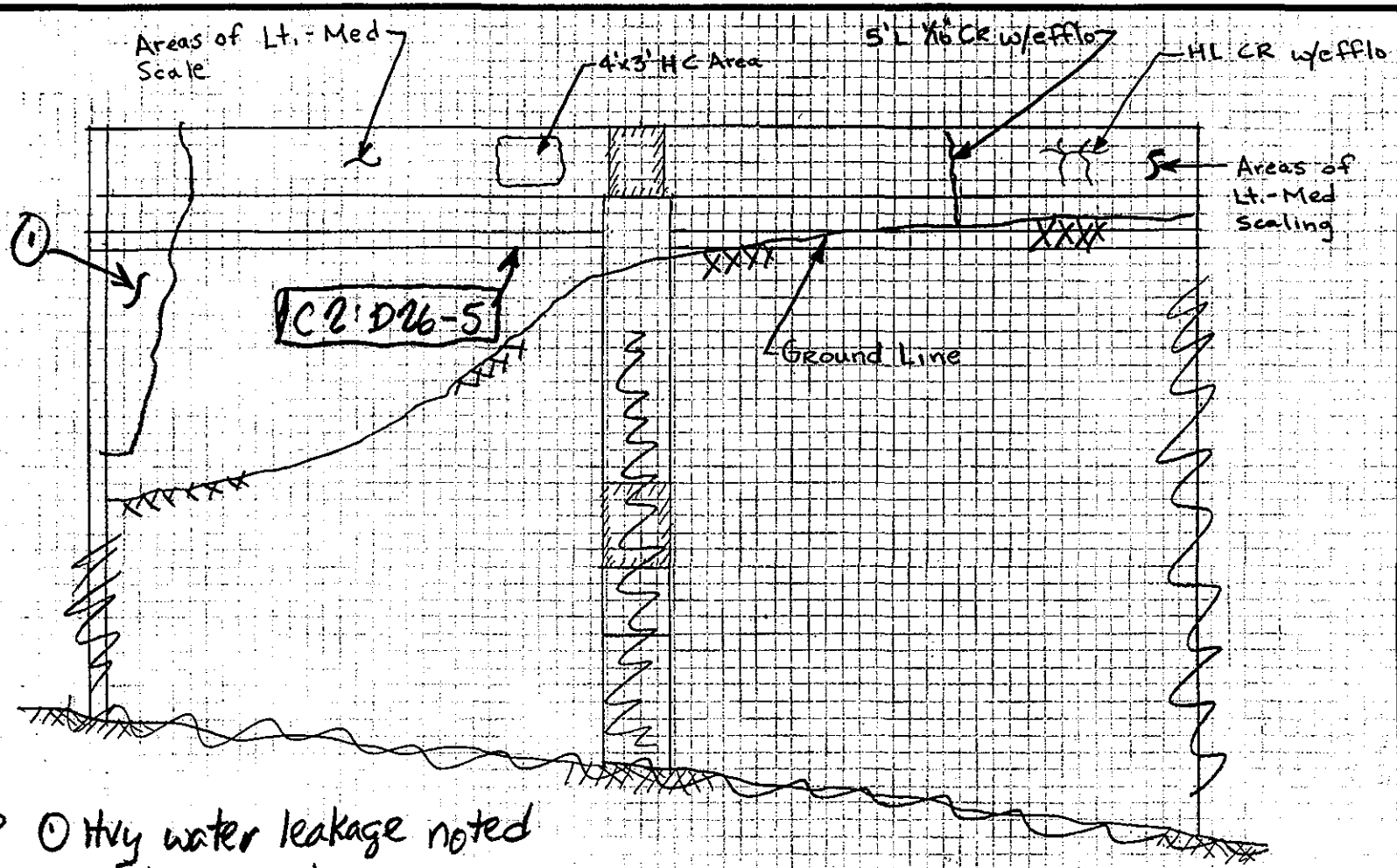

EL/SP ① Hvy water leakage noted 4.13.01 after rainstorm.

WEWMCAA

NORTH ABUT. (INT.) Chamber 1 West Wall East Elev.

FIELD NOTES

PREPARED BY: LICHTENSTEIN	JOB NO. 1986-06	BRIDGE NO. Sagamore
	DATE 4/5/01	SHEET 4 of 11
	CREW SD	

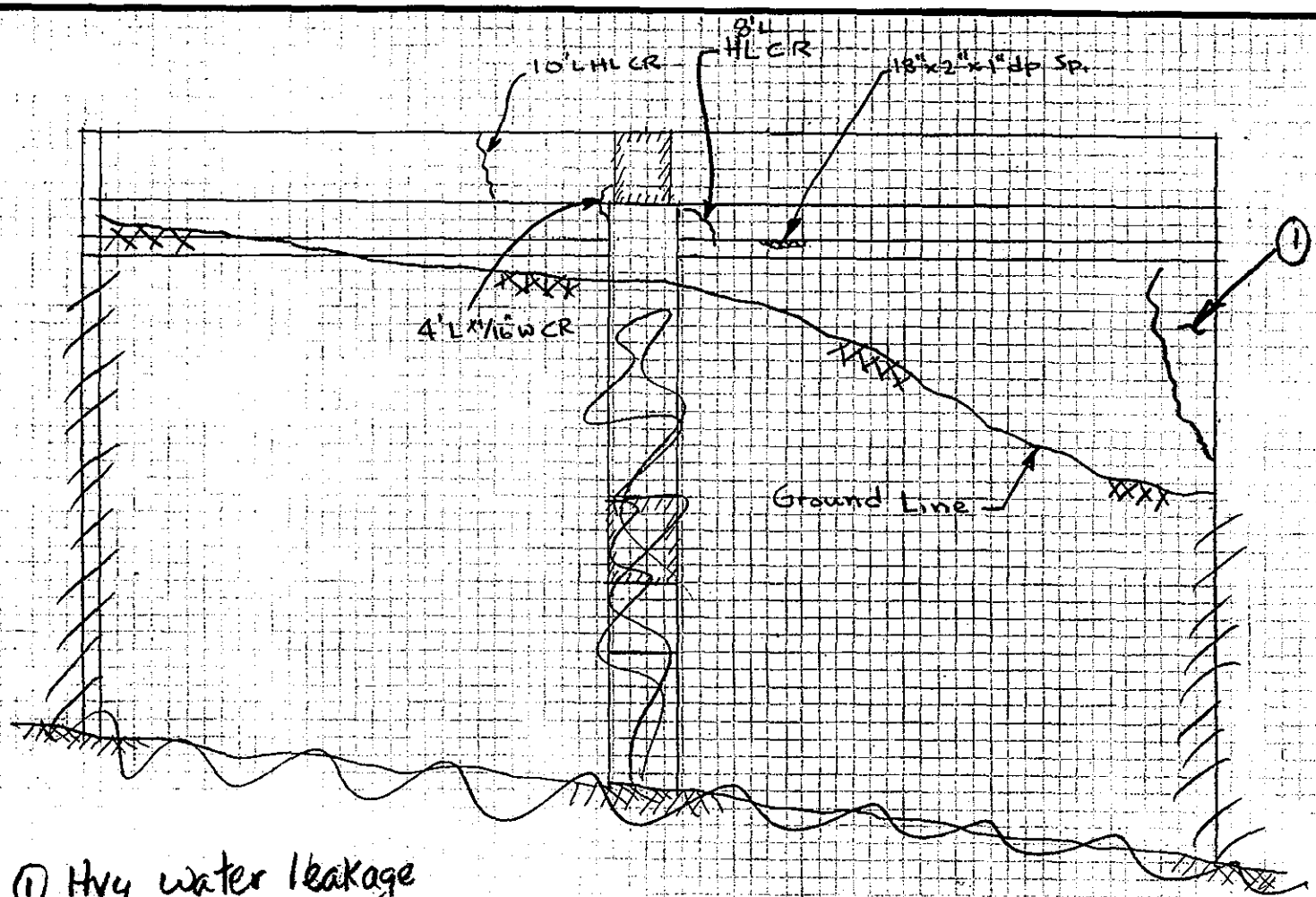

EL/SP ① Hvy water leakage
4-13-01 noted after rain storm

N. Abut
Chamber 1
E. Wall
West Elev.

~~VIEW C-C~~

NORTH ABUT. (INT.)

186
199

FIELD NOTES

EL

JOB NO. 1986-06	BRIDGE NO. Sagamore	
DATE 4/5/01	SHEET 3 of 11	
PREPARED BY: LICHTENSTEIN	CREW SD	

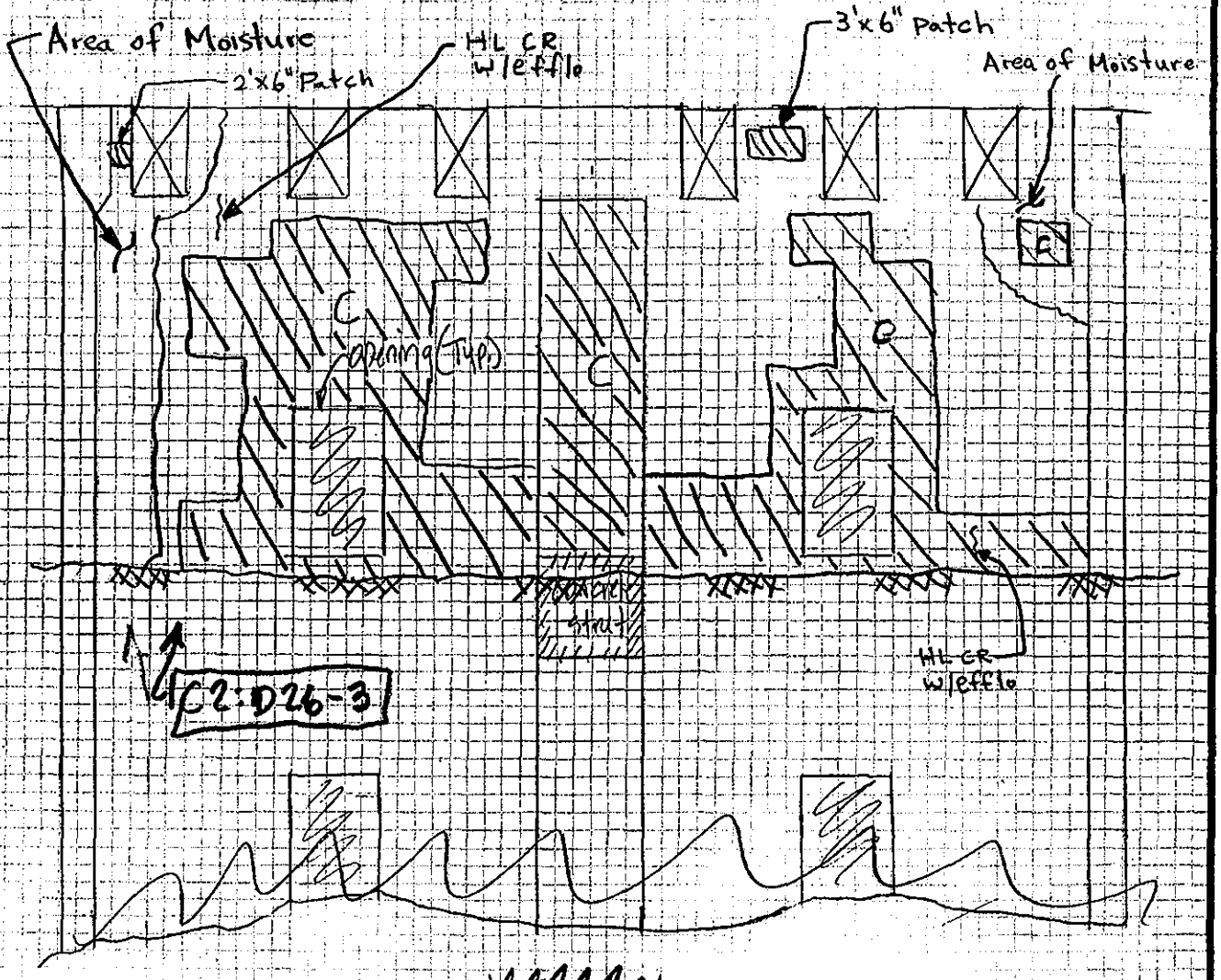

C = Coated Surface

Chamber 1
South Wall
N. Elev.

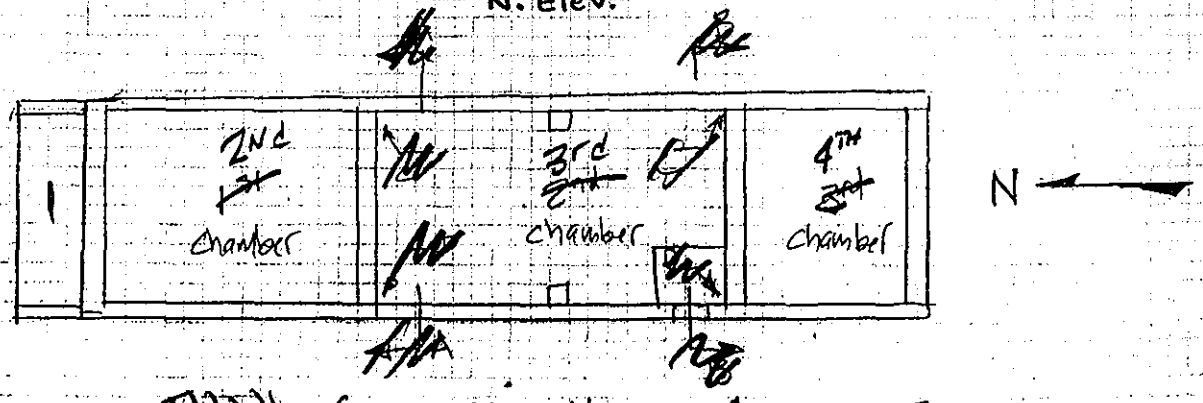

CHAMBER - NORTH ABUTMENT
PLAN VIEW

FIELD NOTES

PREPARED BY: LICHTENSTEIN	JOB NO. 1986-06	BRIDGE NO. Sagamore
CREW SD	DATE 4/5/01	SHEET 1 OF 11

Typ. Cond. - Lt. - Med. Scaling w/efflo in all bays of wall.

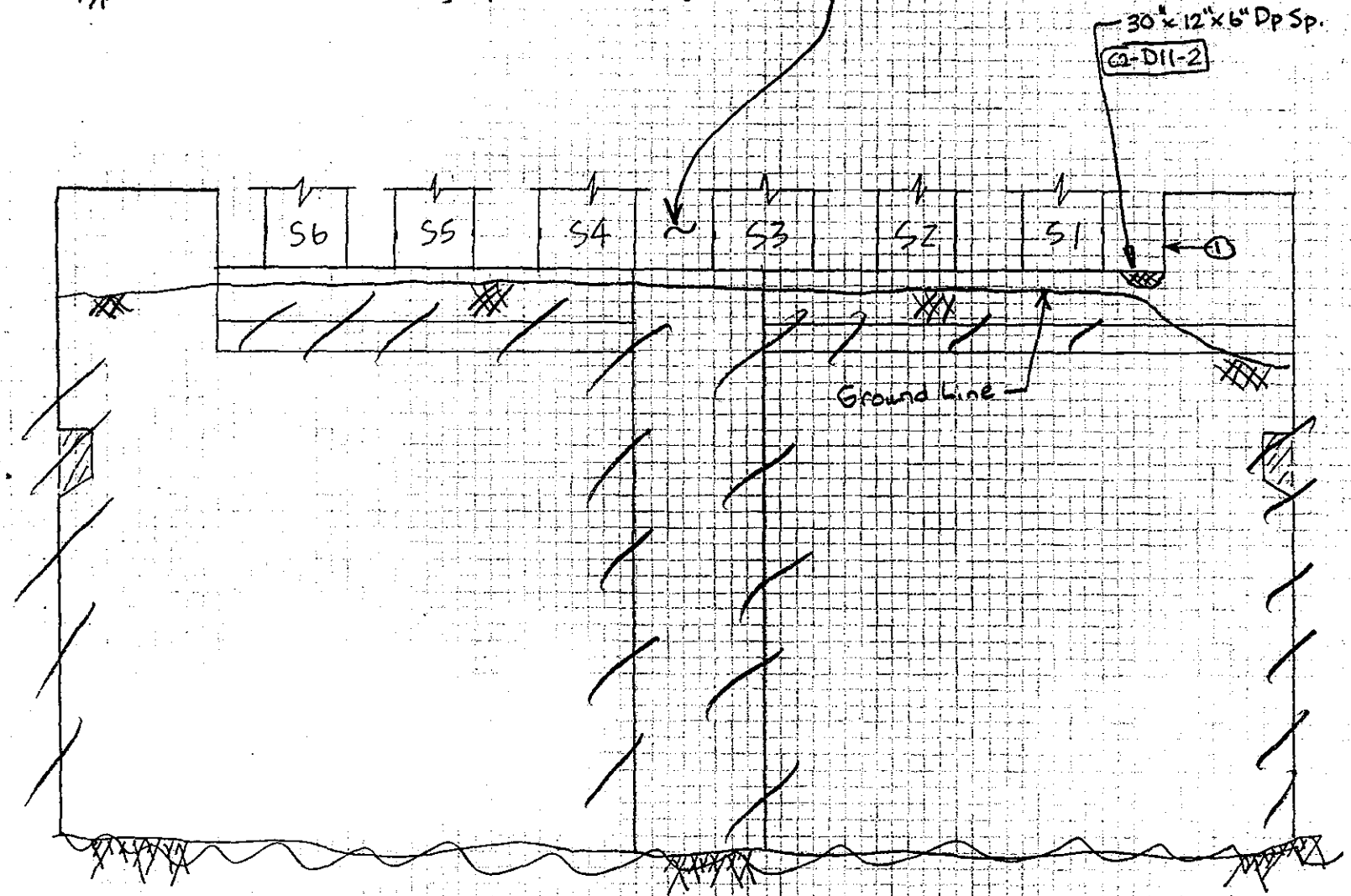

① Sidewalk Opening does not have a tight seal (Can see light) Evidence of Water leakage.

NORTH ABUT - CHAMBER 1

North ~~SOUTH~~ WALL - ~~NORTH~~ ELEV. South

188
199

FIELD NOTES EL	JOB NO. 1986-06	BRIDGE NO. Sagamore
	DATE 4/5/01	SHEET 6 of 11
PREPARED BY: LICHTENSTEIN	CREW SD	

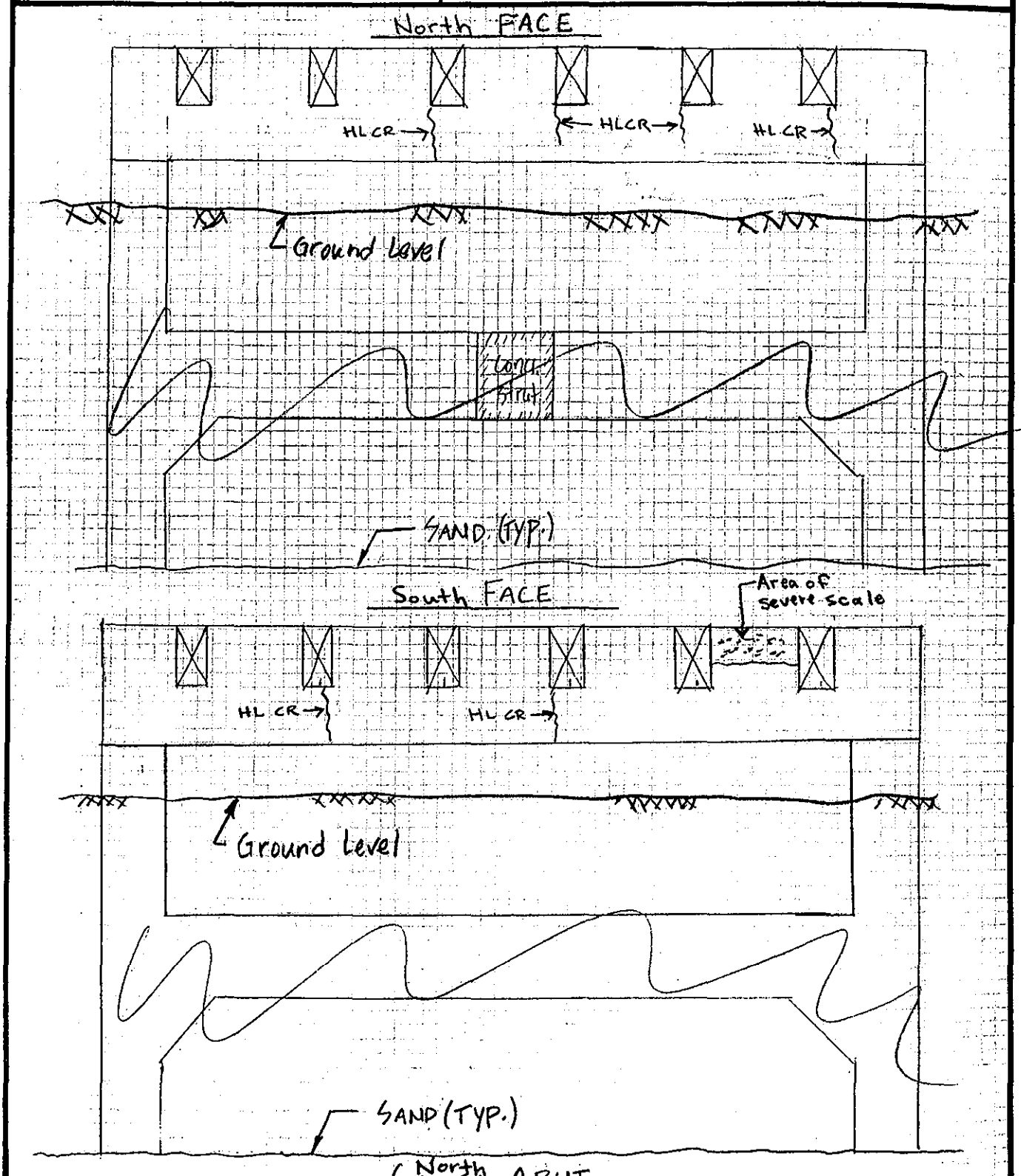

~~South~~ North ABUT.

CENTER BEAM SUPPORT - CHAMBER #1

V. TOP OF DECK

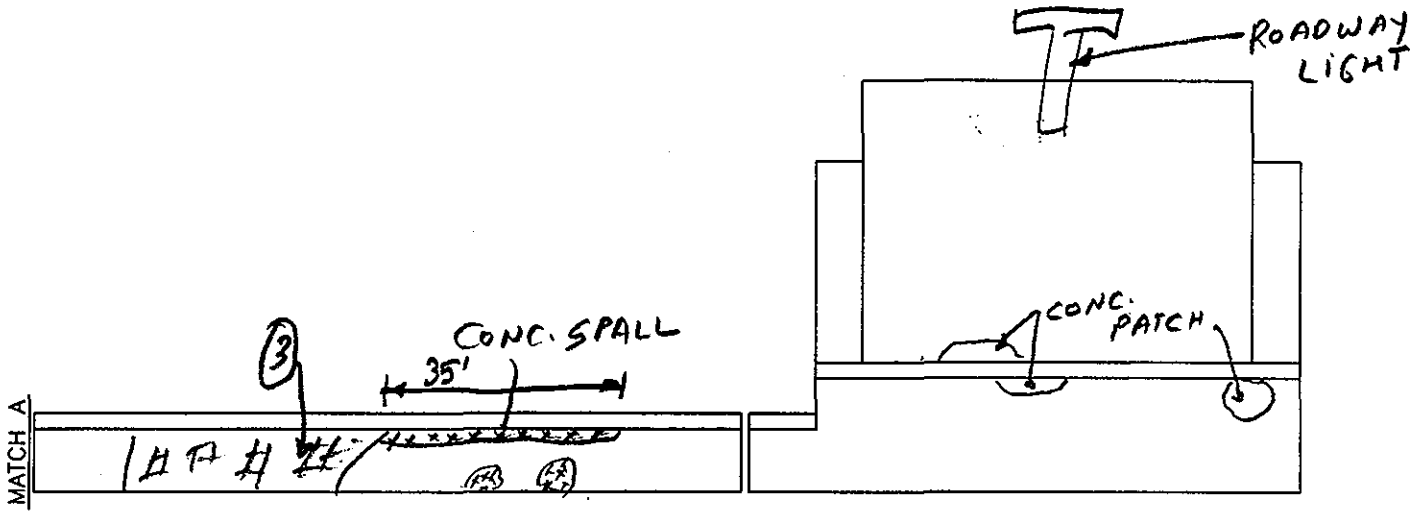

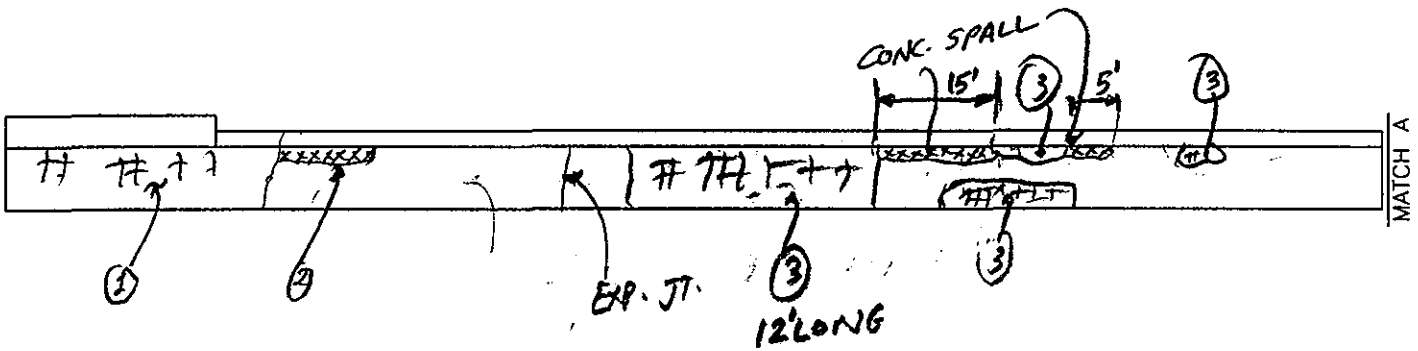

E ELEV. S-W PARAPET

NOTES:

1. AREAS OF EXPOSED STEEL MESH C1-DS-1
2. 9' x 6" SPALL
3. CONC. PATCH WITH AREAS OF MAP CRACKING -

TOP OF DECK EL	
DEPARTMENT OF THE ARMY NEW ENGLAND DISTRICT CORPS OF ENGINEERS	
SAGAMORE HIGHWAY BRIDGE ROUTINE INSPECTION	
NOTES BY: LICHTENSTEIN CONSULTING ENGINEERS	
JOB #1986	DATE: 03/27/01
CREW: AP, EL	SHEET 6 OF 8

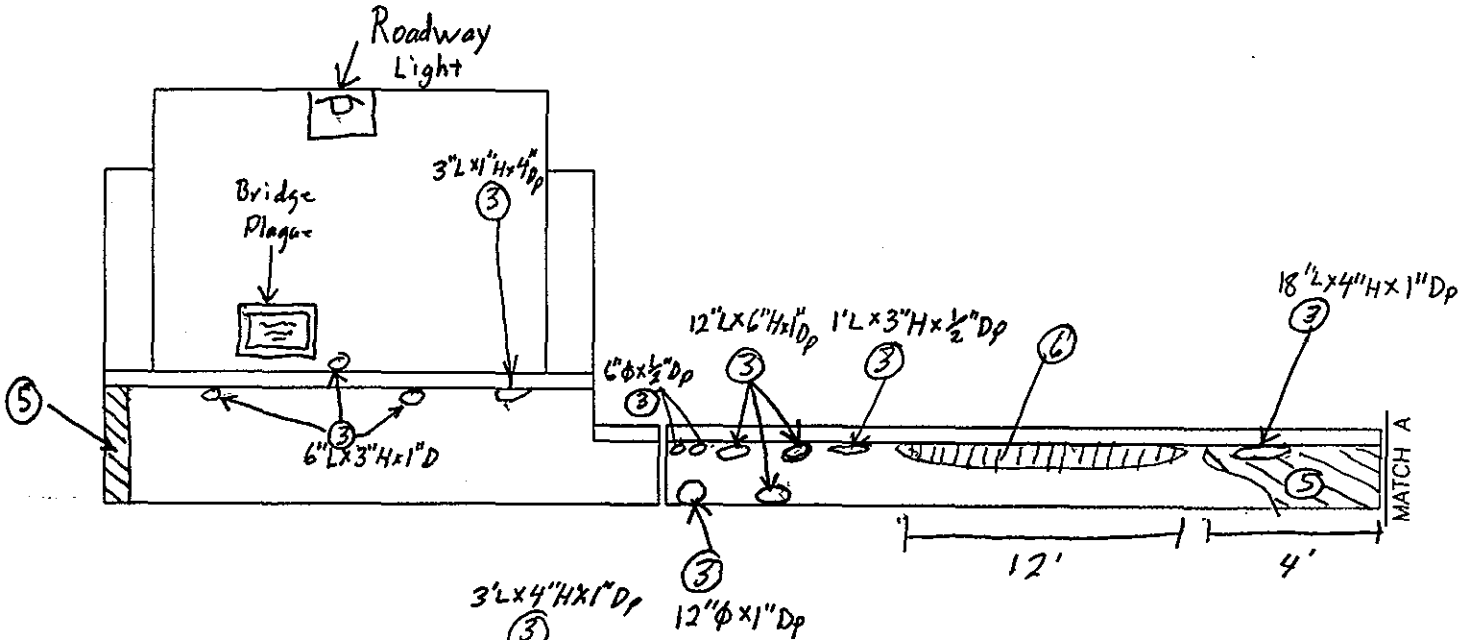

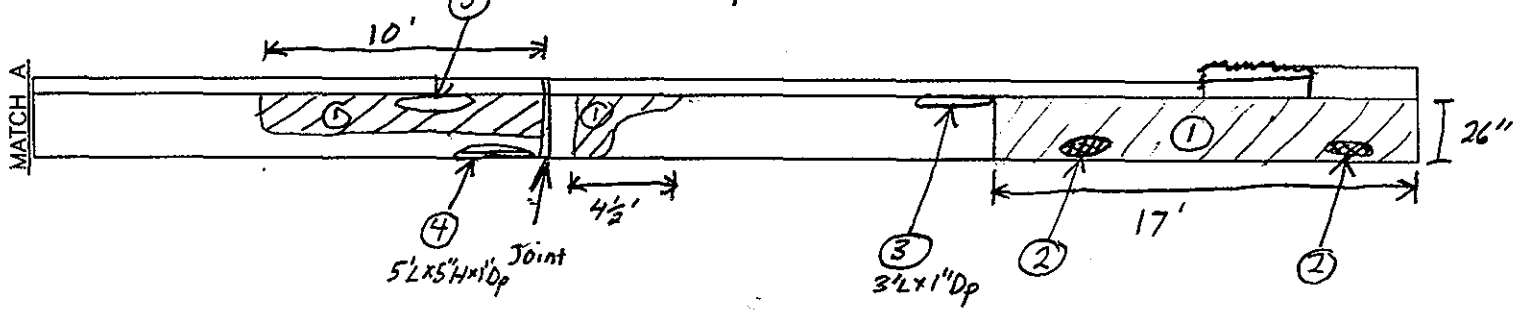

W ELEV. SE PARAPET

NOTES:
1. Patched area w/ map cracking
2. 2'Φ hollow area
3. Concrete spall
4. Concrete spall w/ exposed rebar
5. SIM 1 Hollow when struck w/ hammer
6. SIM 1 w/ minor spalling less than ½" Dp

TOP OF DECK	
DEPARTMENT OF THE ARMY NEW ENGLAND DISTRICT CORPS OF ENGINEERS	
SAGAMORE HIGHWAY BRIDGE ROUTINE INSPECTION	
NOTES BY: LICHTENSTEIN CONSULTING ENGINEERS	
JOB #1986	DATE: 4/13/01
CREW: SP, EL	SHEET 12 OF

• ROADWAY WEARING SURFACE = CONCRETE

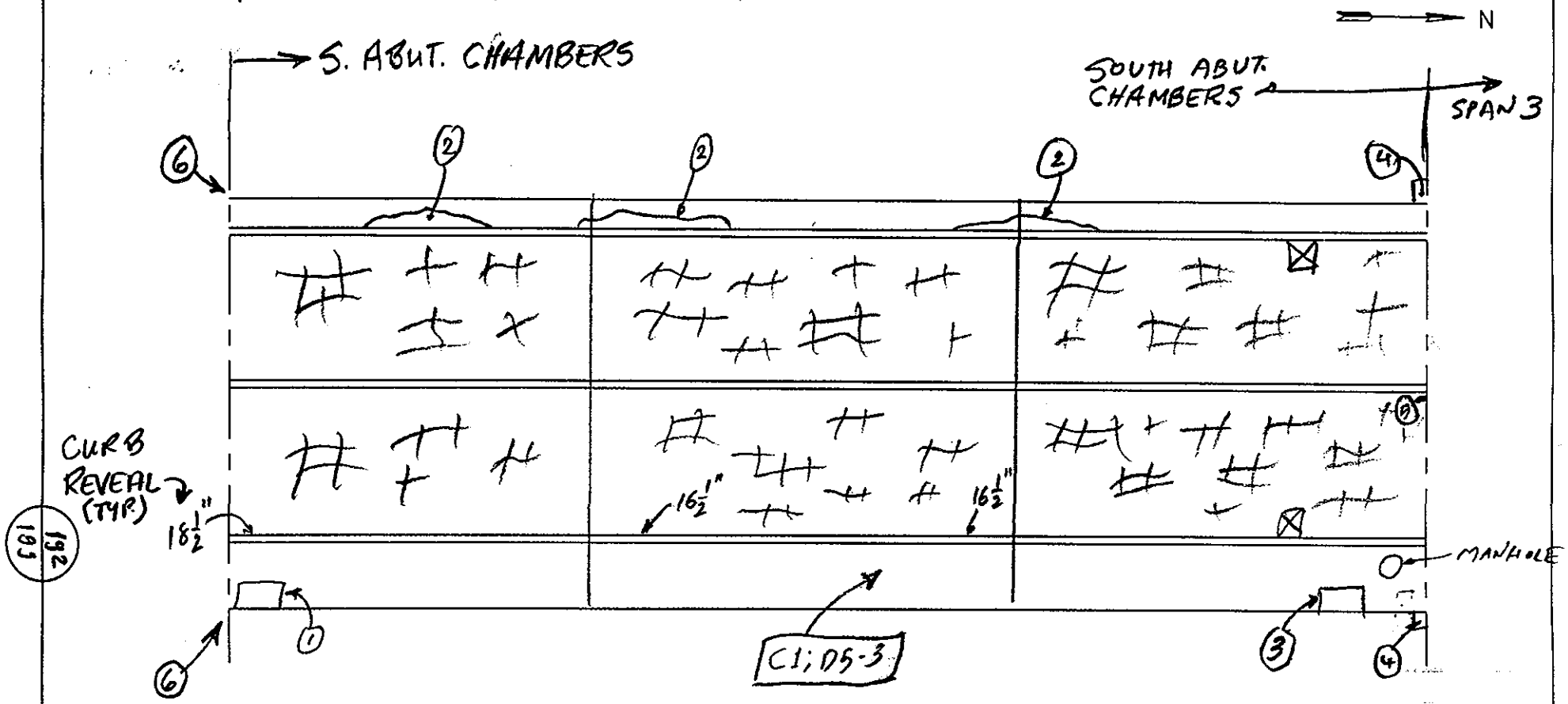

☒ = SCUPPER

SOUTH ABUTMENT SPAN —

NOTES:

1. UTILITY COVER WITH 1" SPALL ALL AROUND
2. SPALLING/HEAVING ON WEARING SURFACE
3. UTILITY COVER LOOSE, CAN BE LIFTED BY HAND
4. 12"X12" HOLE IN SIDEWALK SURFACE @ DECK JT.
5. JT. GLAND FILLED WITH SAND & DEBRIS
6. APPROACH GUARD RAIL NOT ATTACHED W/ TRANSITION SECTION TO PARAPET.

TOP OF DECK EL	
DEPARTMENT OF THE ARMY NEW ENGLAND DISTRICT CORPS OF ENGINEERS	
SAGAMORE HIGHWAY BRIDGE ROUTINE INSPECTION	
NOTES BY: LICHTENSTEIN CONSULTING ENGINEERS	
JOB #1986	DATE: 03/27/01
CREW: AP, EL	SHEET 7 OF 8

⇒ BROKEN OR MISSING MORTAR BTWN CURB STONES 30% OF LOCATIONS
⇒ MINOR ACCUMULATION OF SAND & DEBRIS ALONG CURBS F.L.
⇒ ROADWAY WEARING SURFACE = BIT. CONC

N

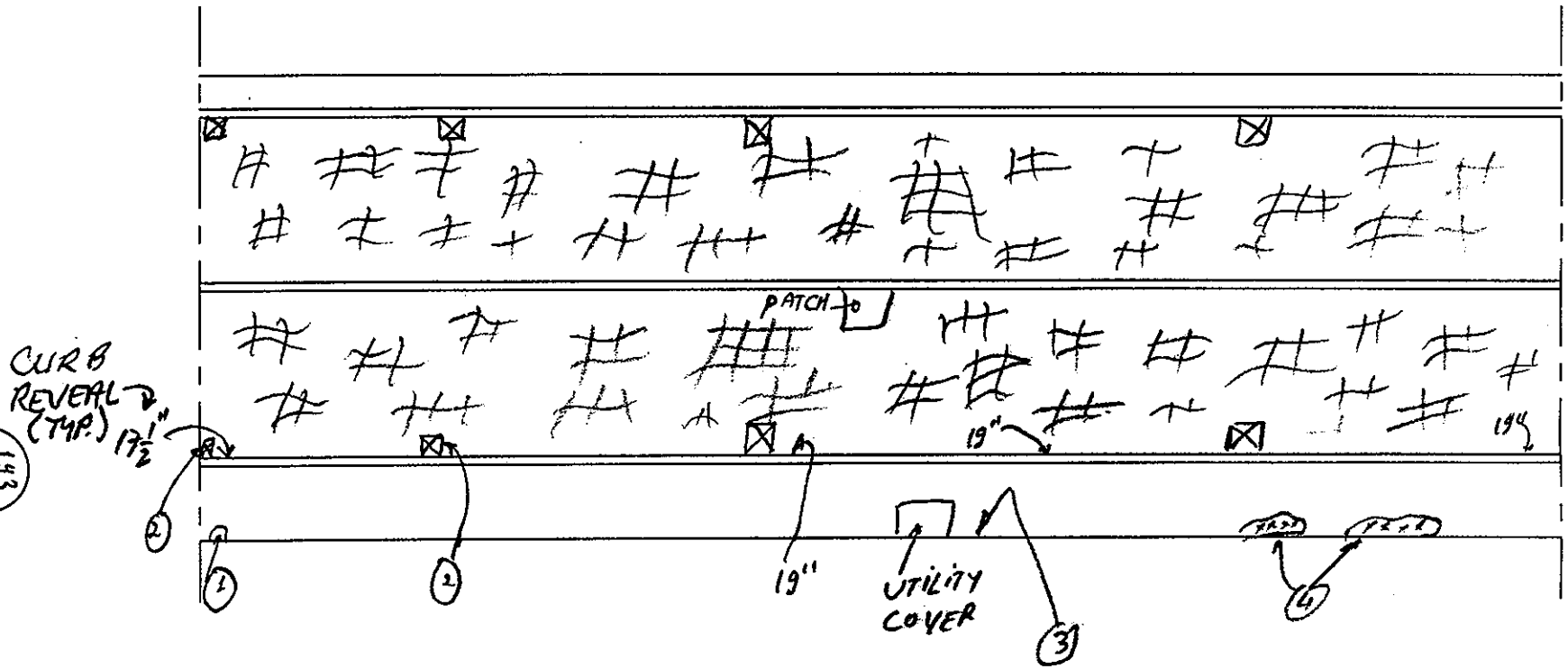

⊠ = SCUPPER

SPAN 3

NOTES:

1. 5"x4" CORROSION HOLE IN STEEL BRIDGE RAIL END POST
2. CLOGGED SCUPPER
3. 50% LOSS ON 2/4 ANCHOR BOLTS FOR LIGHT STANDARD; 5"x4" CORROSION HOLE IN WEST FACE OF LIGHT TOWER
4. SPALLING/HEAVING OF WEARING SURFACE

TOP OF DECK EL

DEPARTMENT OF THE ARMY
NEW ENGLAND DISTRICT CORPS OF ENGINEERS

SAGAMORE HIGHWAY BRIDGE
ROUTINE INSPECTION

NOTES BY: LICHTENSTEIN
CONSULTING ENGINEERS

JOB #1986 | DATE: 03/27/01
CREW: AP, EL | SHEET 3 OF 8

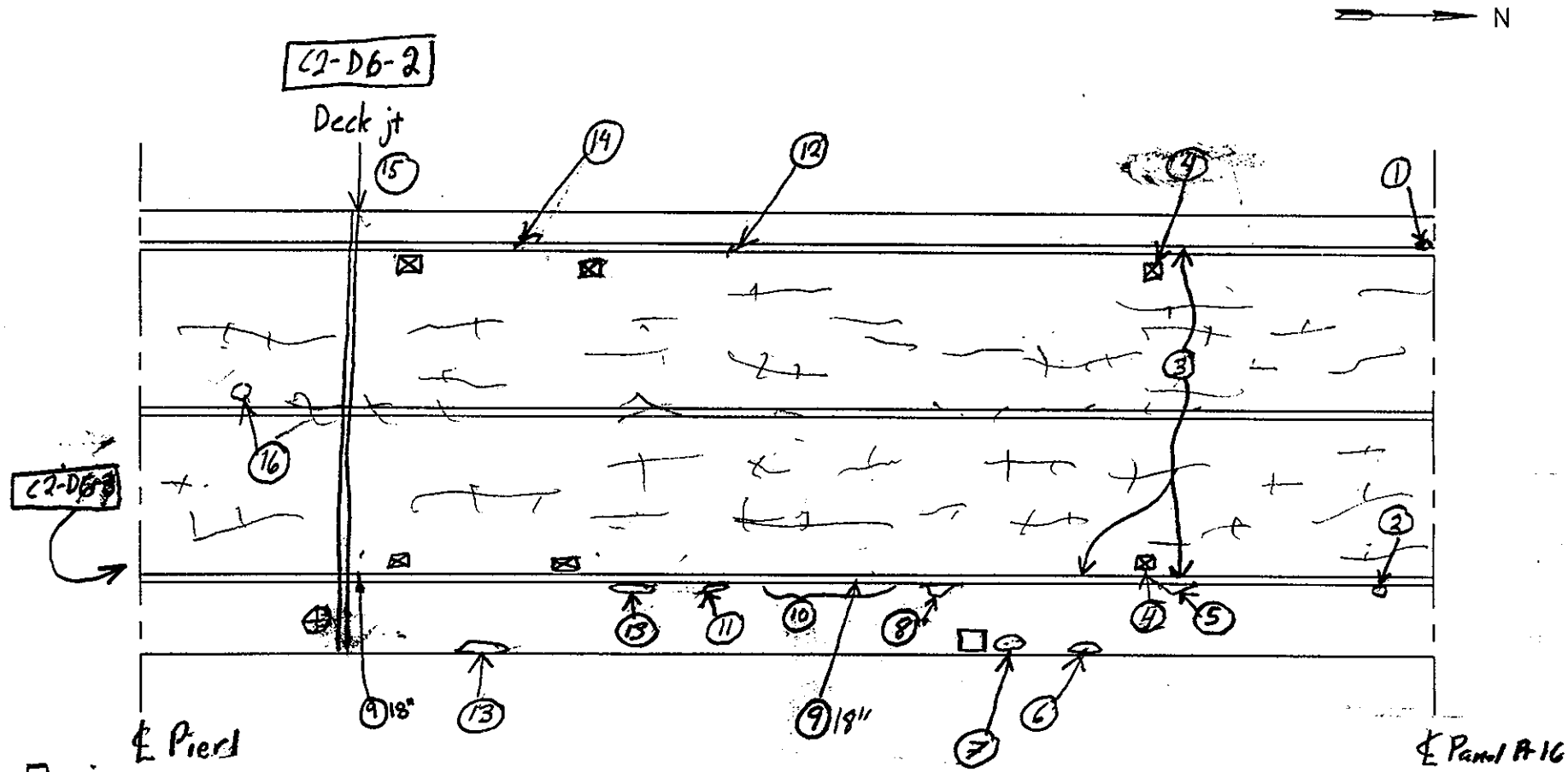

NOTES:
1. cov of utility box is 1" above surface
2. 4"x2"x1/2" Dp. spall
3. Random curb jts. w/ missing mortar
4. Partially clogged scupper
5. 3'x Up to 4"x5" Dp spall
6. 3'x6"x1 1/2" Dp spall
7. 11"x9"x1 1/2" Dp spall
8. 2'x6"x3" Dp spall
9. curb reveal
10. Conc. spall along back edge of Curb - 20'L x 2"W x 9" dp.
11. 1'x6"x 1/2" Dp. spall
12. Vert crack FH in curb stone
13. 4'x2"x1" Dp
14. Crack in curb stone
15. Deck jt filled w/ sand and debris
16. 4"ϕ x 1/2" Dp spall

TOP OF DECK EL	
DEPARTMENT OF THE ARMY NEW ENGLAND DISTRICT CORPS OF ENGINEERS	
SAGAMORE HIGHWAY BRIDGE ROUTINE INSPECTION	
NOTES BY: LICHTENSTEIN CONSULTING ENGINEERS	
JOB #1986	DATE: 3/27/01
CREW: SD, SP	SHEET 7 OF 8

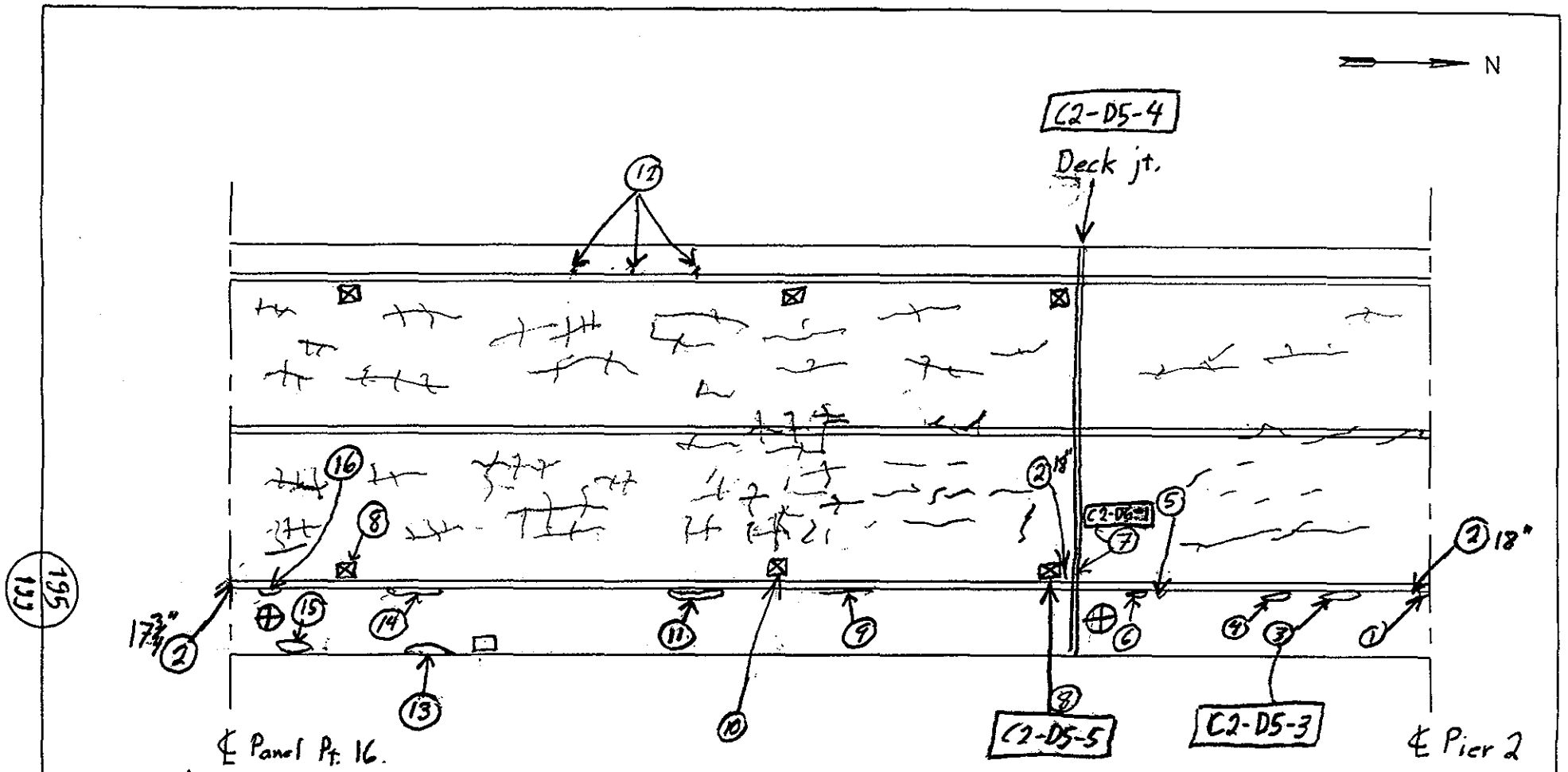

SPAN 1

NOTES:
1. 6"x5" spall in curb
2. Curb reveal
3. 3'x up to 6"x 2" Dp spall
4. 2'x 3"x 1" Dp spall
5. 3"x 5"x 1½" Dp spall
6. 2'x 2"x 1" Dp spall
7. 3" L hole in deck jt seal nr E. curb
8. Partially clogged scupper
9. 4' L crack
10. fully clogged scupper
11. 18"x 2"x 1" Dp spall
12. Missing mortar bet. curb jts. at random locations
13. 3'x 5"x 2½" Dp spall
14. 4'x 5"x 2" Dp spall
15. 3'x 5"x ½" Dp spall
16. 1'x 2"x 1" Dp spall

TOP OF DECK EL	
DEPARTMENT OF THE ARMY NEW ENGLAND DISTRICT CORPS OF ENGINEERS	
SAGAMORE HIGHWAY BRIDGE ROUTINE INSPECTION	
NOTES BY: LICHTENSTEIN CONSULTING ENGINEERS	
JOB #1986	DATE: 3/27/01
CREW: SD, SP	SHEET 6 OF 8

WEARING SURFACE = BIT. CONC. ON ROADWAY

℄ PANEL PT 9'

N

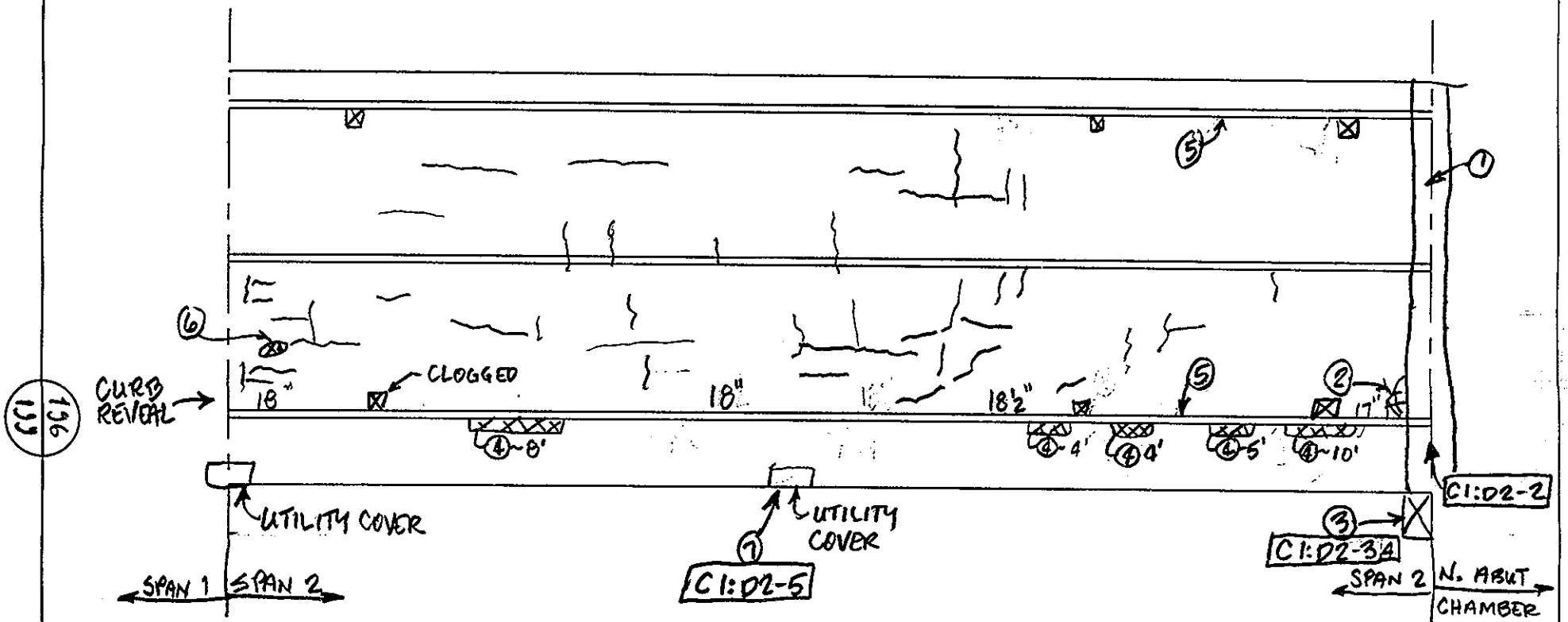

☒ = SCUPPER

SPAN 2

NOTES:

1. JT. GLAND FILLED W/ SAND & DEBRIS. MOD. SCALE OF CONC. HEADER FOR FULL WIDTH OF ROADWAY
2. 24" x 12" x ½" SPALL
3. 13½" x 9" HOLE IN SIDEWALK @ DECK JT.
4. SPALL UP TO 6" WIDE x 1" DP.
5. LOOSE OR MISSING MORTAR BTWN CURBSTONES ≈ ⅓ OF ALL LOCATIONS.
6. 24" x 6" x 1" DP. GOUGE IN WEARING SURFACE
7. HVY PITTING, UP TO 75% LOSS ON LIGHT STANDARD ANCHOR BOLTS

TOP OF DECK EL

DEPARTMENT OF THE ARMY
NEW ENGLAND DISTRICT CORPS OF ENGINEERS

SAGAMORE HIGHWAY BRIDGE
ROUTINE INSPECTION

NOTES BY: LICHTENSTEIN
CONSULTING ENGINEERS

JOB #1986	DATE: 3·20·01
CREW: EL	SHEET 4 OF 4

WEARING SURFACE = CONC.

⑨ MINOR SETTLEMENT IN OUTER LANE
⑩ " HEAVING OF PVMNT

N

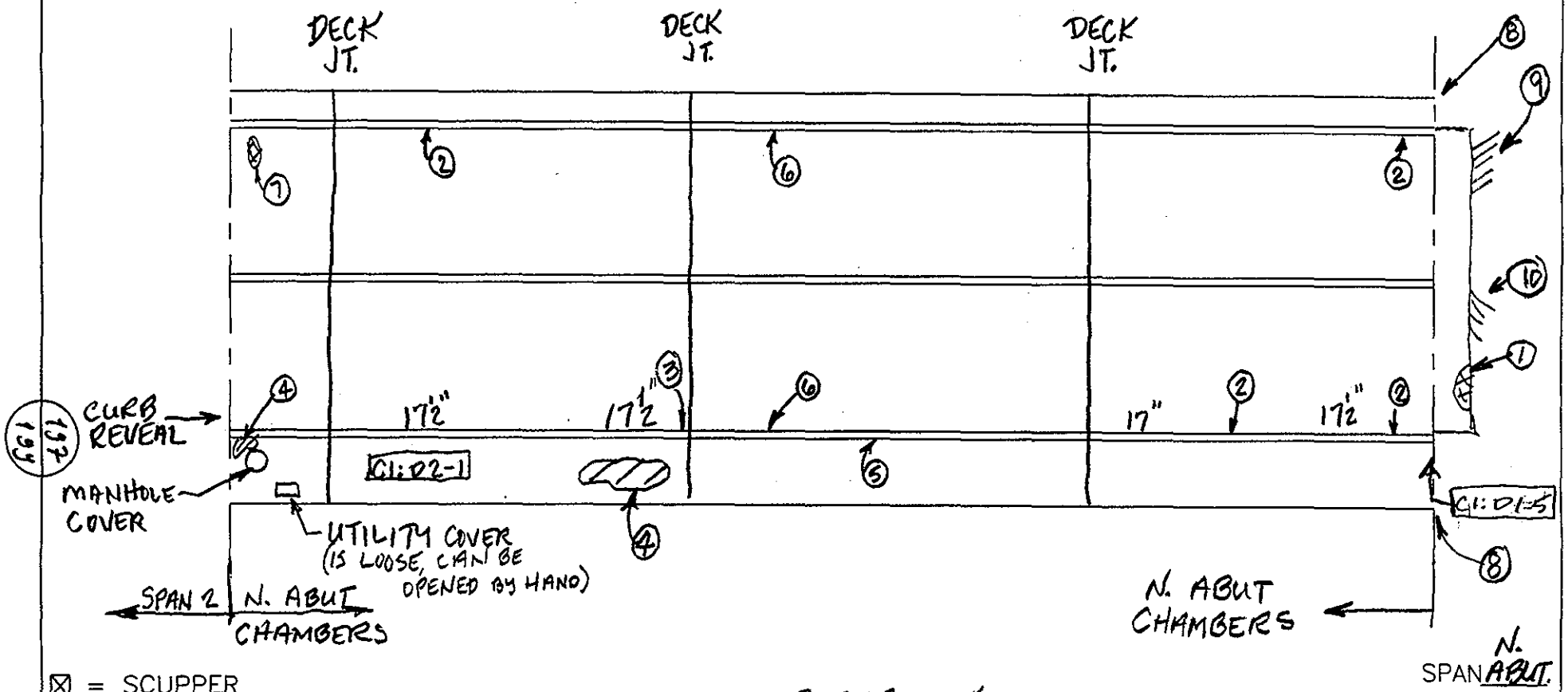

☒ = SCUPPER

NOTES:
⑧ APPROACH GUARD RAIL NOT ATTACHED TO PARAPET W/ TRANSITION SECTION
① 36"×18"× UP TO 1" DP SPALL IN CONC. HEADER 1:1-4
② MISSING MORTAR BTWN CURBSTONES
③ 6"×3"×5" SPALL IN CURBSTONE
④ AREA OF MOD SCALING
⑤ AREAS OF SPALLING IN WEARING SURFACE @ CURB, FULL SPAN LENGTH, UP TO 3" WIDE × ½" DP. (Sidewalk)
⑥ MINOR DEBRIS ACCUMULATION, FULL SPAN LENGTH
⑦ 12"×6"×1" DP SPALL W/ 12"×24" AREA OF SCALING

TOP OF DECK EL	
DEPARTMENT OF THE ARMY NEW ENGLAND DISTRICT CORPS OF ENGINEERS	
SAGAMORE HIGHWAY BRIDGE ROUTINE INSPECTION	
NOTES BY: LICHTENSTEIN CONSULTING ENGINEERS	
JOB #1986	DATE: 3·20·01
CREW: EL	SHEET 3 OF 4

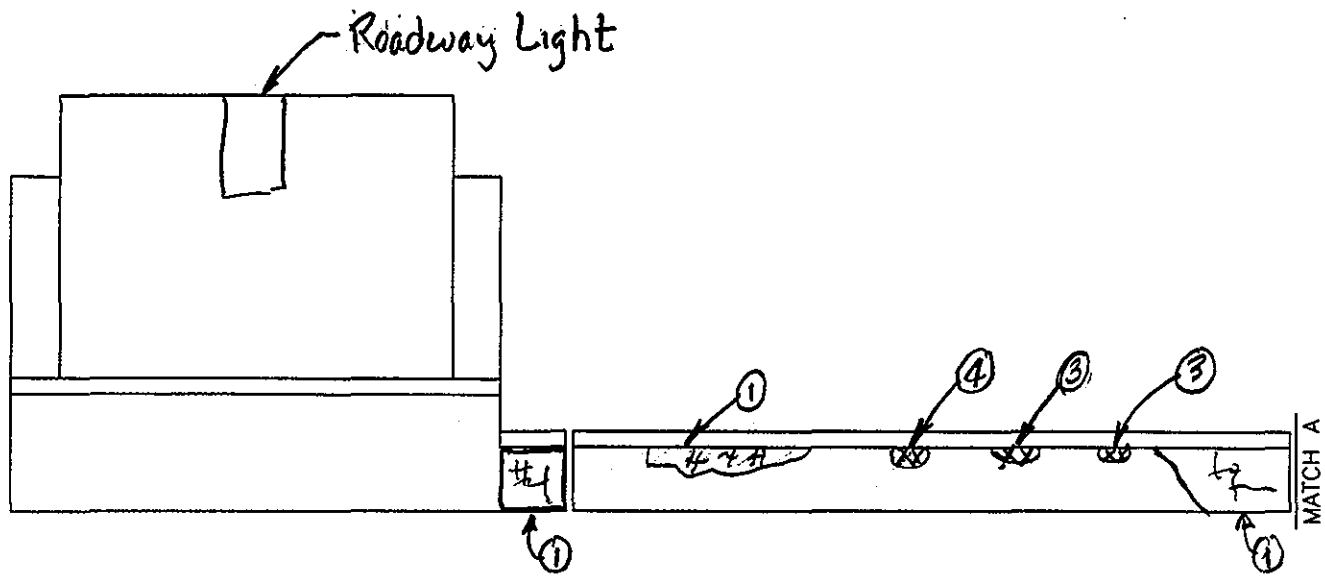

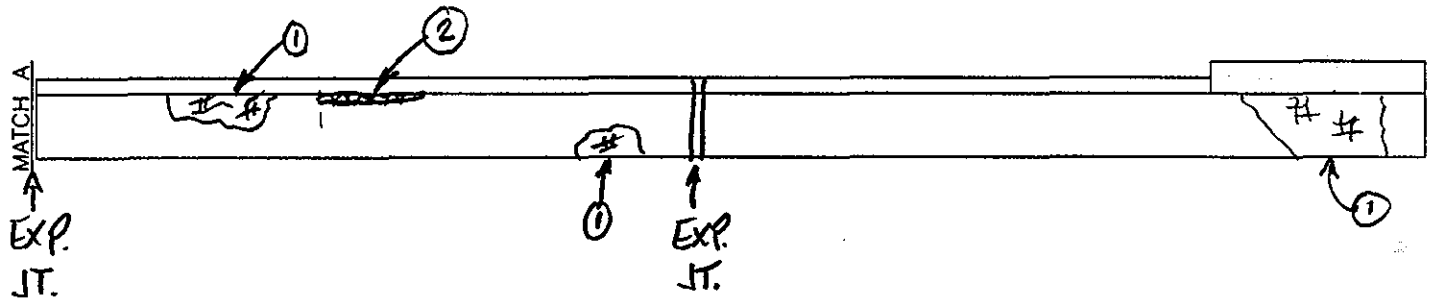

E ELEV. NW PARAPET

NOTES:

1. PATCH W/ MAPCRACKING
2. SPALL UP TO 1" DP, 4' x 2"
3. " " " " , 1' x 4"
4. " " " " , 1½' x 4"

TOP OF DECK EL	
DEPARTMENT OF THE ARMY NEW ENGLAND DISTRICT CORPS OF ENGINEERS	
SAGAMORE HIGHWAY BRIDGE ROUTINE INSPECTION	
NOTES BY: LICHTENSTEIN CONSULTING ENGINEERS	
JOB #1986	DATE: 3-20-01
CREW: EL	SHEET 1 OF 4

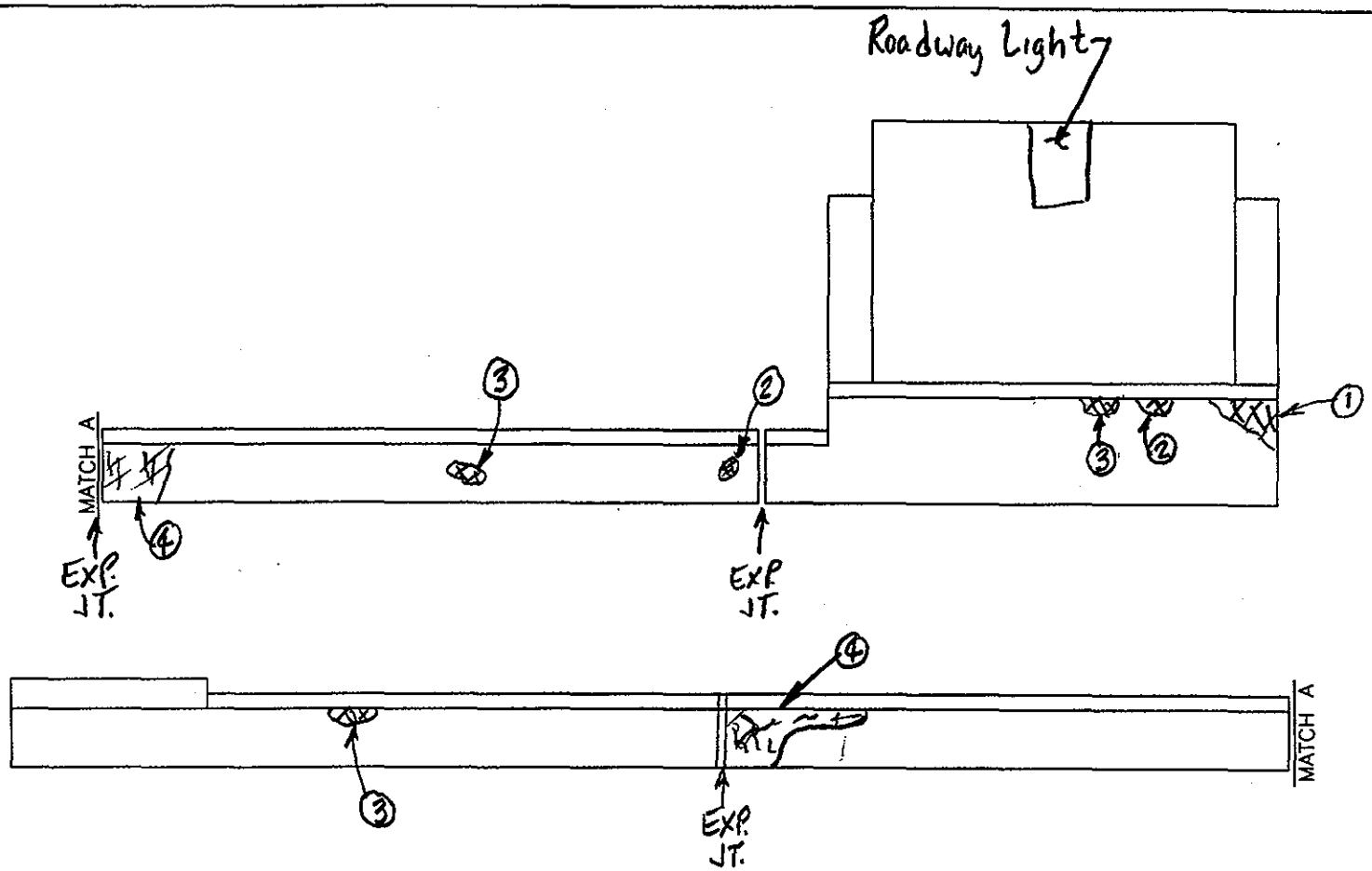

W ELEV. NE PARAPET

NOTES:

1. 15" x 15" x 2" DP SPALL
2. SPALL UP TO 1" DP, 6" Ø
3. " " " " , 1' x 4"
4. PATCH w/ MAPCRACKING

TOP OF DECK EL

DEPARTMENT OF THE ARMY
NEW ENGLAND DISTRICT CORPS OF ENGINEERS

SAGAMORE HIGHWAY BRIDGE
ROUTINE INSPECTION

NOTES BY: LICHTENSTEIN
CONSULTING ENGINEERS

JOB #1986 DATE: 3.20.01

CREW: EL SHEET 2 OF 4

133
195