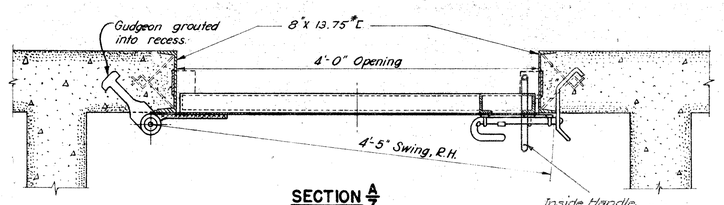

SECTION A/7
SCALE: 1½" = 1'-0"

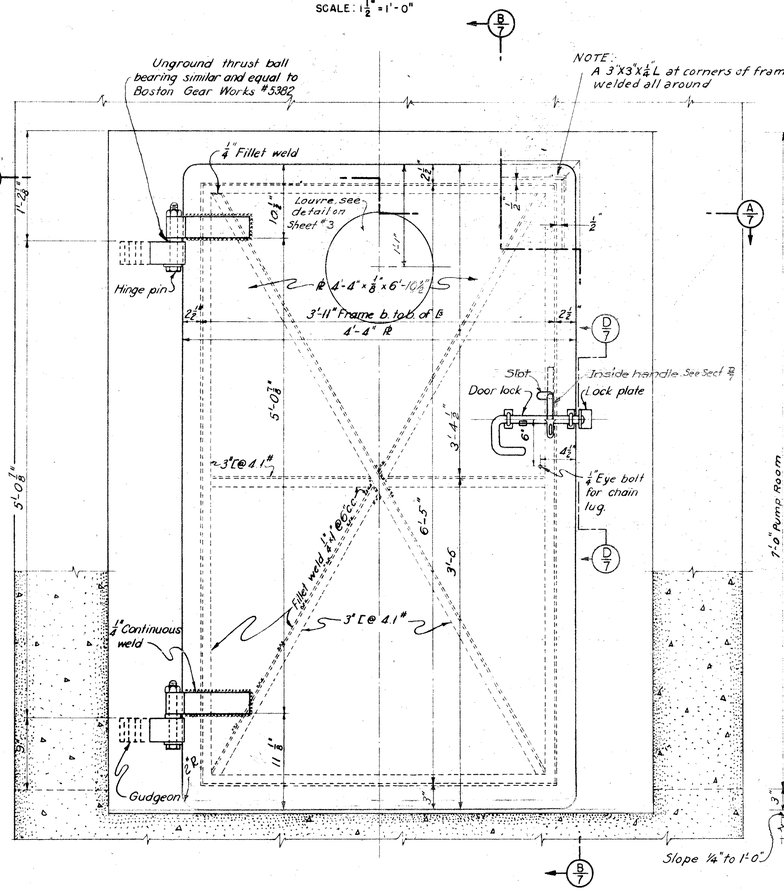

PUMP ROOM DOOR
SCALE: 1½" = 1'-0"

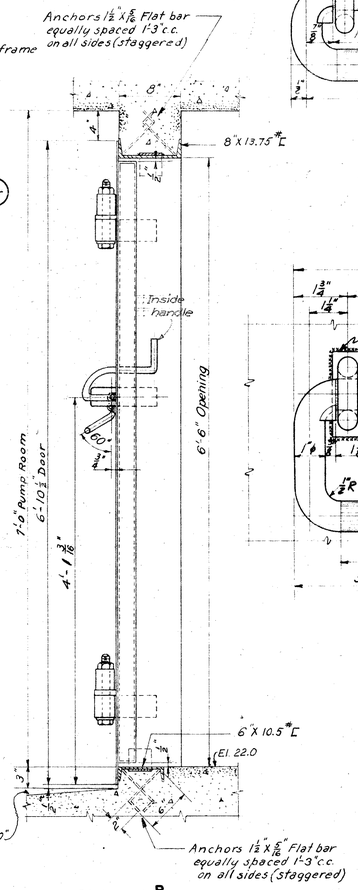

SECTION B/7
SCALE: 1½" = 1'-0"

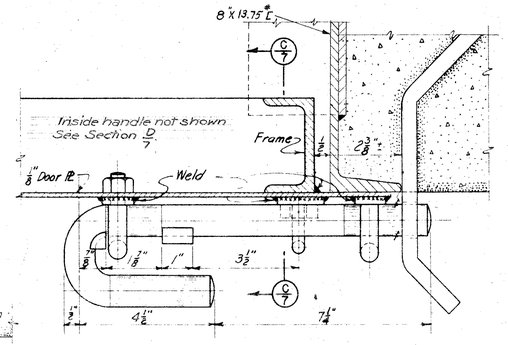

PLAN
SCALE: 6" = 1'-0"

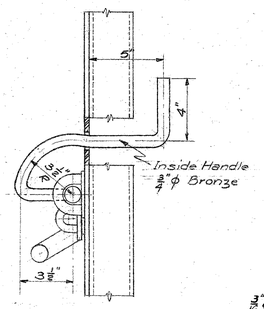

SECTION D/7
Scale: 3" = 1'-0"

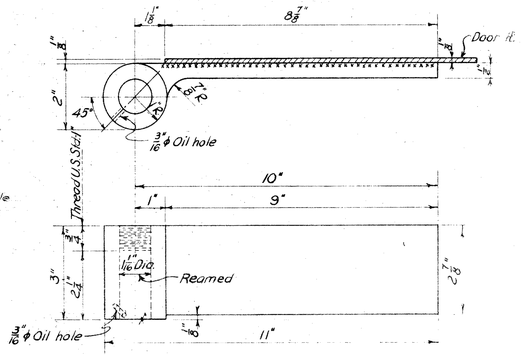

DOOR HINGE PLATE
SCALE: 6" = 1'-0"
Steel forging
2-Required

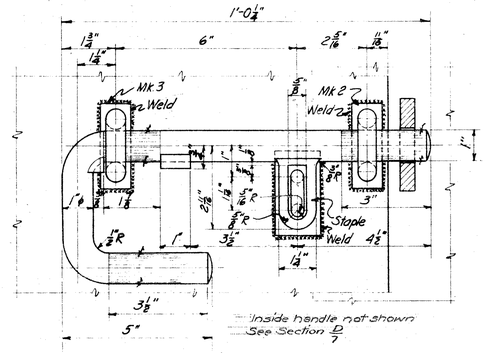

DOOR LOCK ASSEMBLY
SCALE: 6" = 1'-0"
Bolt – Cast bronze
Guides – Forged steel.

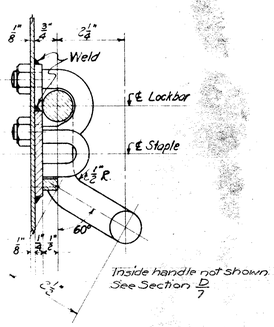

SECTION C/7 (OPPOSITE HAND)
SCALE: 6" = 1'-0"

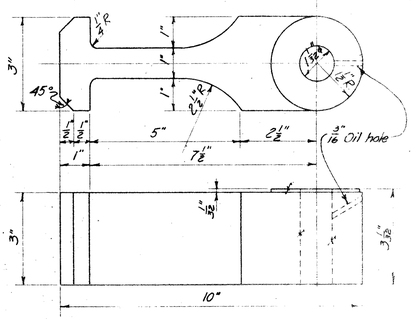

WALL GUDGEON
SCALE: 6" = 1'-0"
Bronze Casting
2-Required

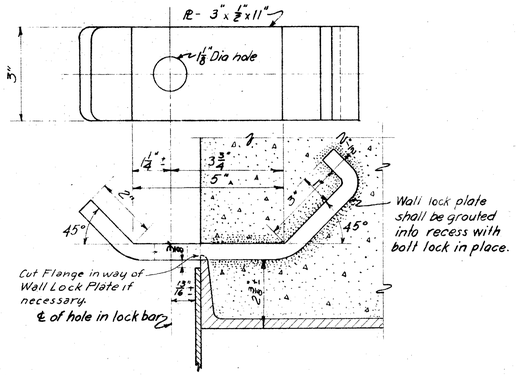

WALL LOCK PLATE
SCALE: 6" = 1'-0"

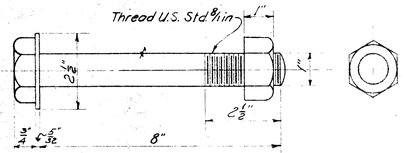

DOOR HINGE PIN, NUT AND WASHER
SCALE: 6" = 1'-0"
Stainless steel
2-Required

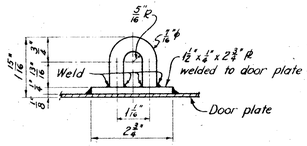

LOCK STAPLE
SCALE: 6" = 1'-0"

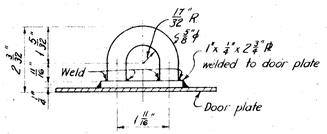

MK. 2
BAR GUIDE
SCALE: 6" = 1'-0"

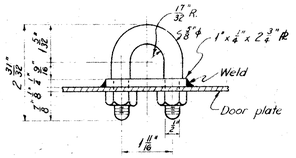

MK. 3
BAR GUIDE
SCALE: 6" = 1'-0"

NOTES:
All materials shall b
noted.
For general notes,

DATE	REV. NO.	REVISION	REV. BY	AP. BY	DOC. NO.
9-21-44	1	Final Field changes made For "RECORD DRAWING"		Ram	

RECO
HAF
B/
RESERVOIR
RESERV
IN 9 SHEETS S'
U.S. ENGINEER OFF
APPROVAL RECOMMENDED:
John E. Allen
CHIEF, WAR. AND FLOOD CONTROL SUB.
SUBMITTED:
CHIEF, DESIGN SECTION, JR. ENGINEER.
ASSOCIATE ENGINEER.
DES. BY.
DR. BY.
TR. BY.
CH. BY.

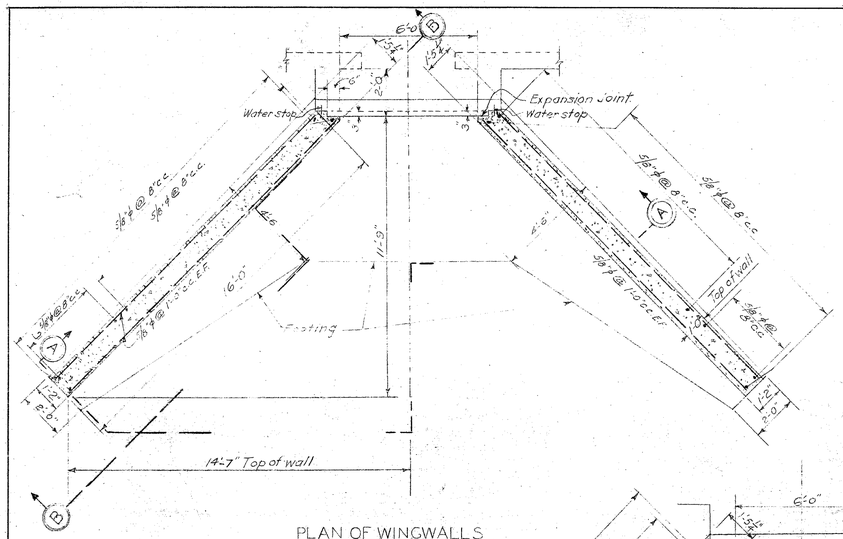

PLAN OF WINGWALLS
SCALE 3/8"=1'-0"

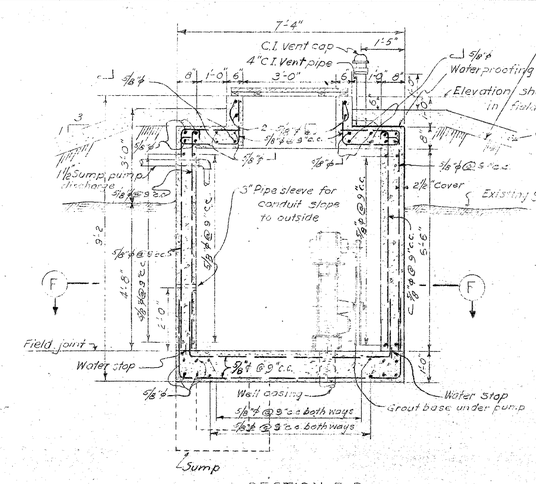

SECTION D-D
SCALE 1/2"=1'-0"

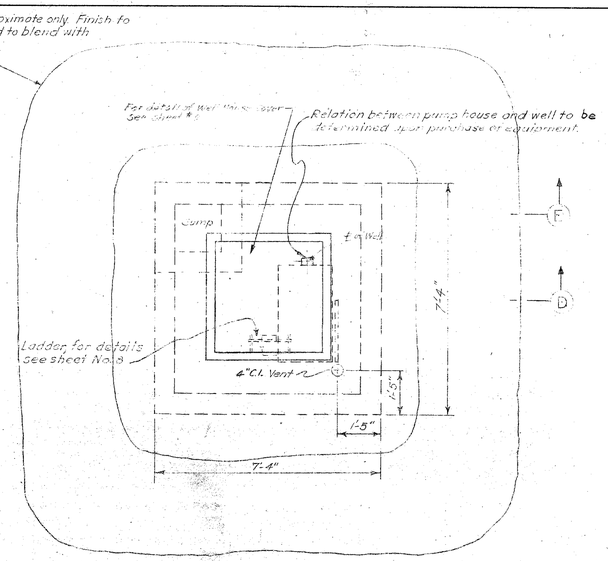

WELL PUMP HOUSE
GENERAL PLAN
SCALE 1/2"=1'-0"

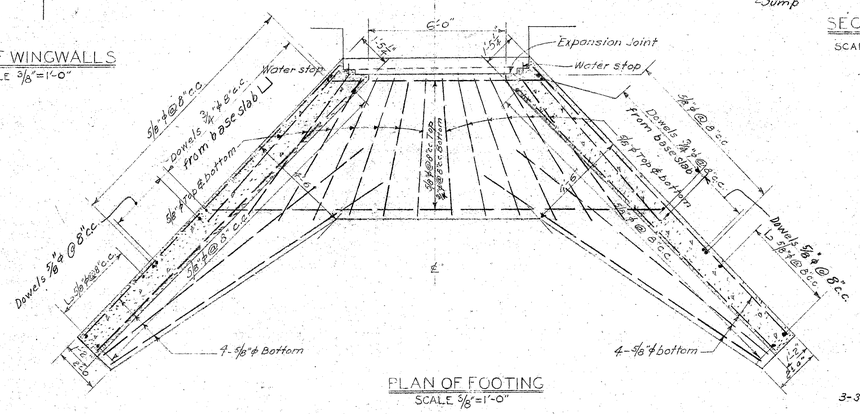

PLAN OF FOOTING
SCALE 3/8"=1'-0"

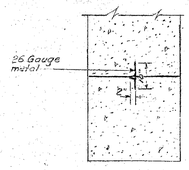

DETAIL OF FIELD JOINT AND WATER STOP
SCALE 1/2"=1'-0"

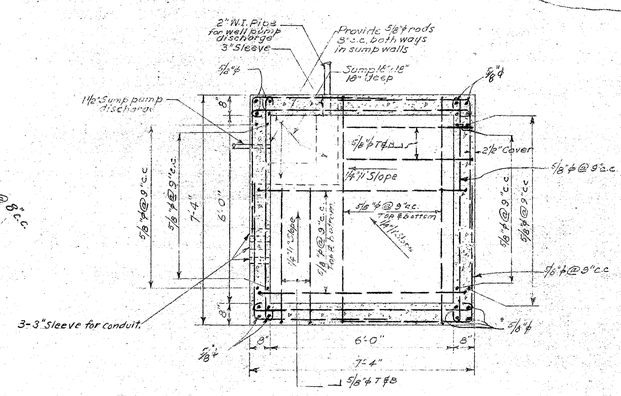

SECTION F-F
SCALE 1/2"=1'-0"

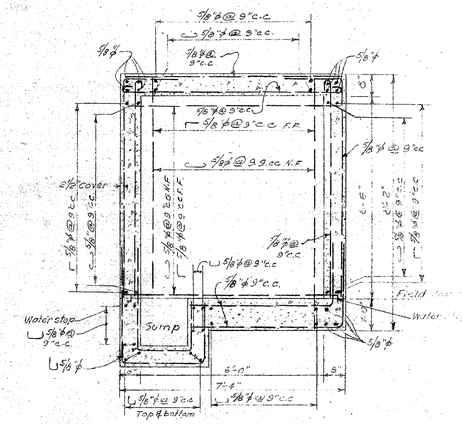

SECTION E-E
SCALE 1/2"=1'-0"

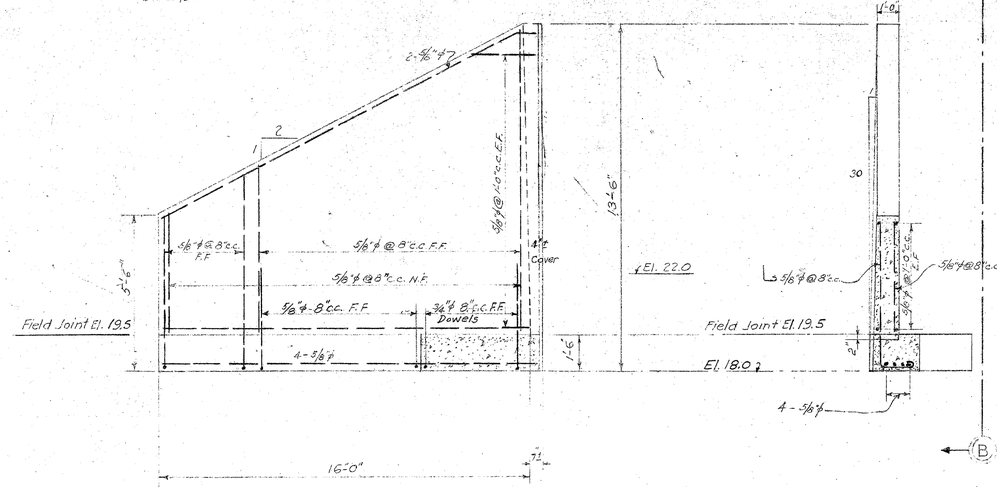

SECTION B-B
SCALE 3/8"=1'-0"

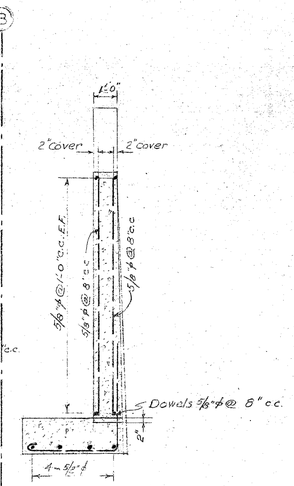

SECTION A-A
SCALE 3/8"=1'-0"

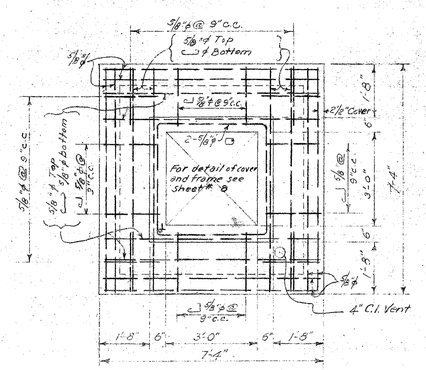

PLAN OF ROOF SLAB
SCALE 1/2"=1'-0"

DETAILS OF ENTRANCE WINGWALLS

RE

RESER
WINGW
IN 9 SHEE
U.S. ENGI
APPROVAL
CHIEF
SUBMI

1	Final Field changes made for Record Drawing	9-21-61	

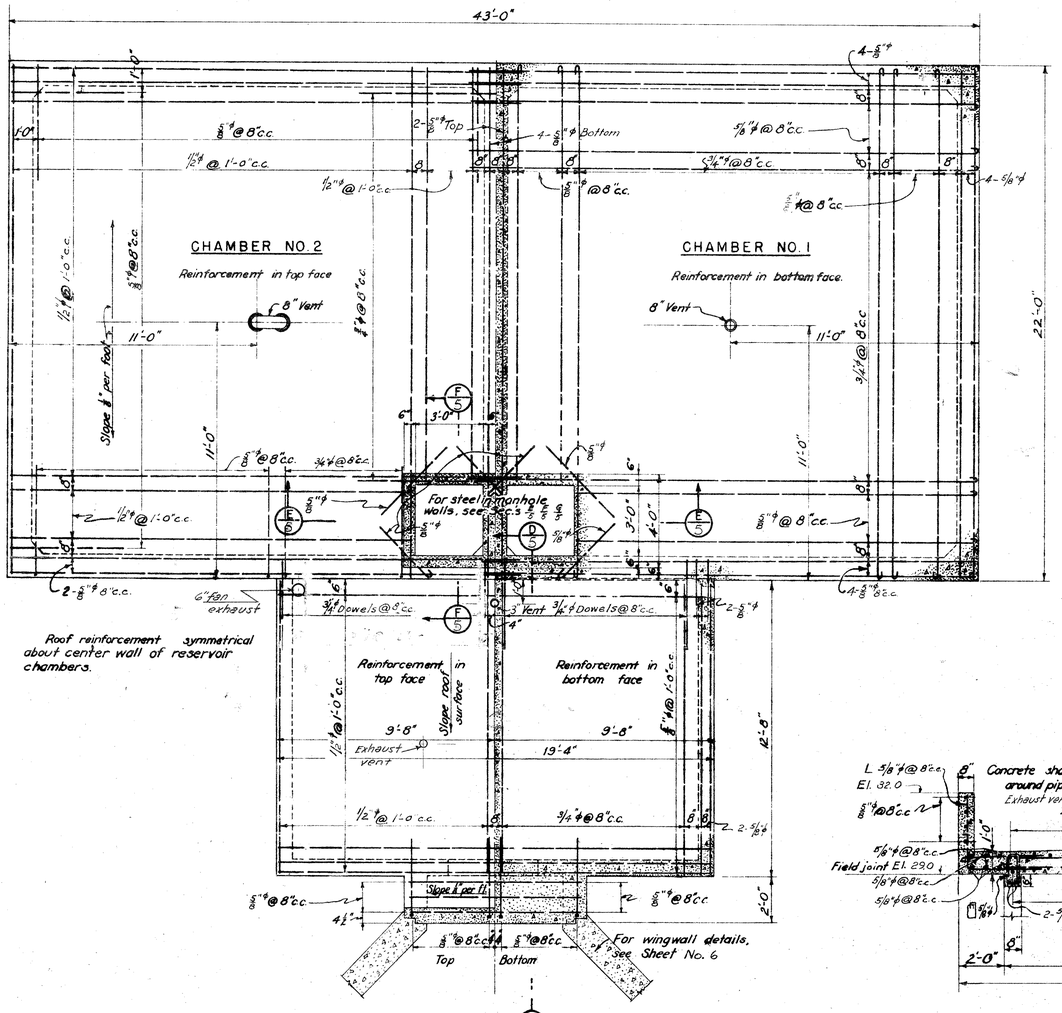

PLAN OF ROOF REINFORCEMENT

SCALE 3/8" = 1'-0"

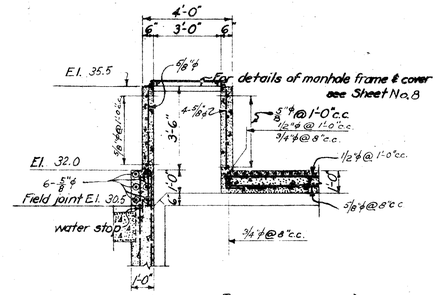

SECTION F/5

SCALE 3/8" = 1'-0"

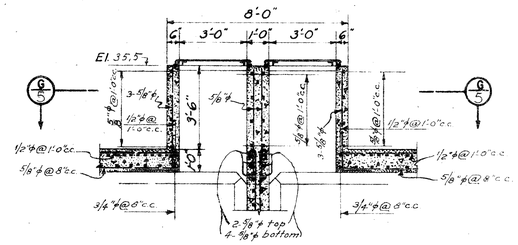

SECTION E/5

SCALE 3/8" = 1'-0"

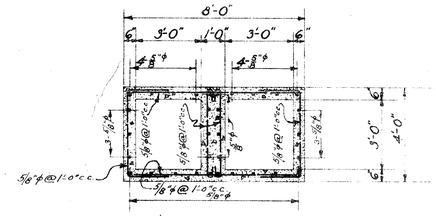

SECTION G/5

SCALE 3/8" = 1'-0"

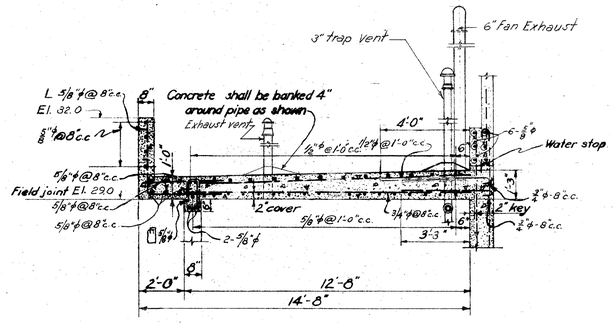

SECTION D/5

SCALE 3/8" = 1'-0"

NOTES

For general notes applying to details on this sheet

Minimum cover of reinforcing steel in roof slab shc

DATE	REV. NO.	
9-21-44		Fina for k