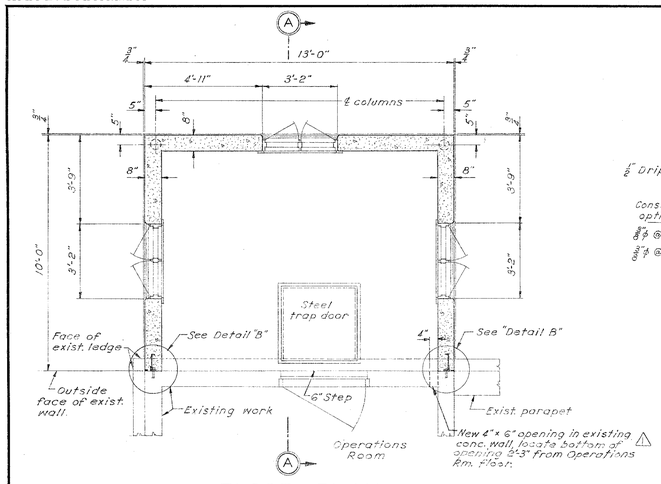

FLOOR PLAN

SCALE $\frac{3}{8}$" = 1'-0"

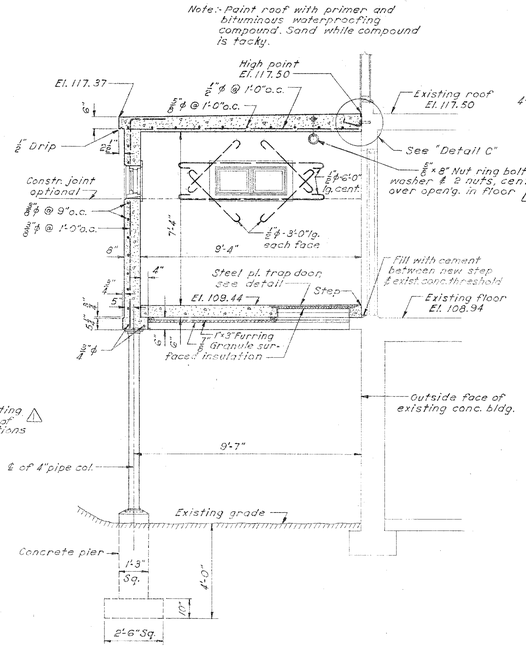

SECTION A-A

SCALE $\frac{3}{8}$" = 1'-0"

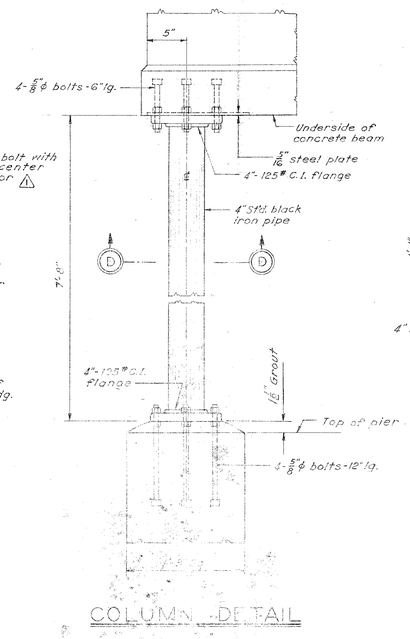

COLUMN DETAIL

SCALE $\frac{1}{2}$" = 1'-0"

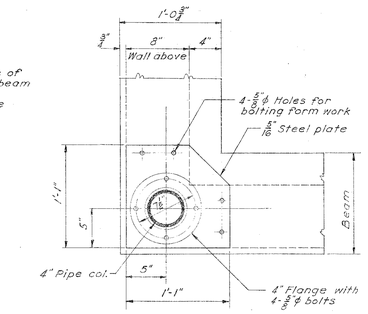

SECTION D-D

SCALE $1\frac{1}{2}$" = 1'-0"

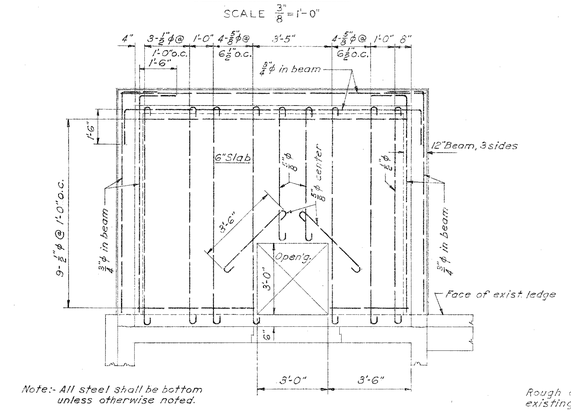

FLOOR REINFORCING

SCALE $\frac{3}{8}$" = 1'-0"

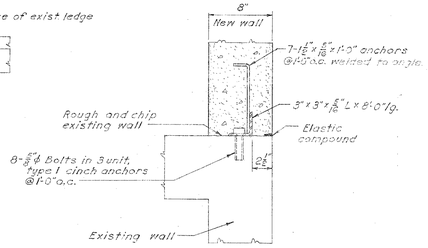

DETAIL "B"

SCALE $1\frac{1}{2}$" = 1'-0"

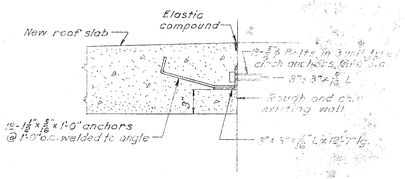

DETAIL "C"

SCALE $1\frac{1}{2}$" = 1'-0"

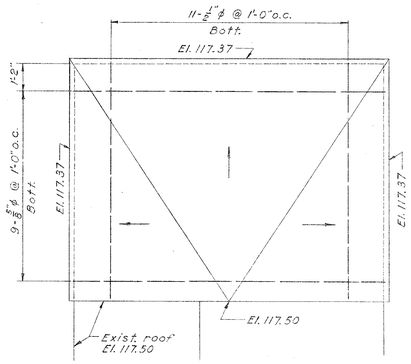

ROOF PLAN

SCALE $\frac{3}{8}$" = 1'-0"

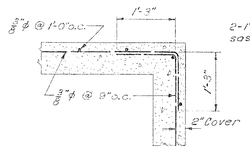

CORNER WALL REINFORCING

SCALE $\frac{3}{4}$" = 1'-0"

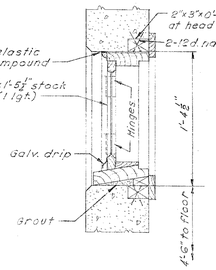

SECTION E-E

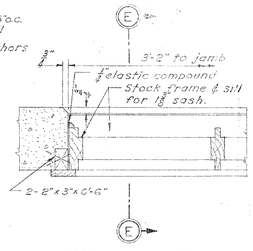

JAMB & MULLION

Note: Sash to be installed with 2-2½" butt hinges and 10" casement adjuster at head, #5415, and casement fastener, #5434½" Lockwood Hardware Mfg. Co., or equal.

SASH DETAIL

SCALE $1\frac{1}{2}$" = 1'-0"

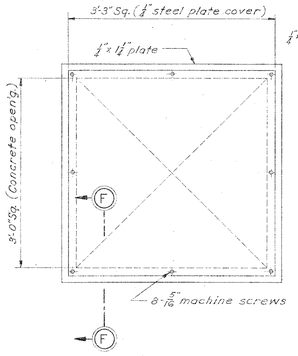

TRAP DOOR DETAIL

SCALE $\frac{3}{4}$" = 1'-0"

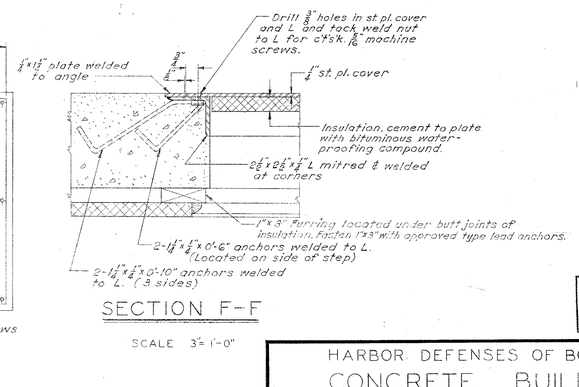

SECTION F-F

SCALE 3" = 1'-0"

TRANSFER DRAWINGS

HARBOR DEFENSES OF BOSTON

CONCRETE BUILDING
FORT DAWES, BOSTON, MASS.
ADDITION

IN 9 SHEETS — SHEET NO 9 — SCALE AS NOTED

U. S. ENGINEER OFFICE, BOSTON, MASS. 11 SEP. 1944

APPROVAL RECOMMENDED: John E. Allen — CHIEF ENGINEERING DIVISION

APPROVED: LT. COLONEL, CORPS OF ENGINEERS, DISTRICT ENGINEER

SUBMITTED: CHIEF DESIGN SECTION, SR. ENGINEER

DES. BY / DR. BY / TR. BY / CH. BY — ENGINEER

FILE NO. 4-7-4-6/8

NO.	CHARACTER	DATE	BY
	Transfer Dwg: No changes: Opening & roof added to opening		

REVISIONS

BOSTON BLUE PRINT CO.