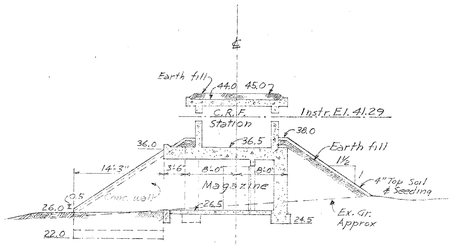

SECTION B-B
SCALE 1" = 10'-0"

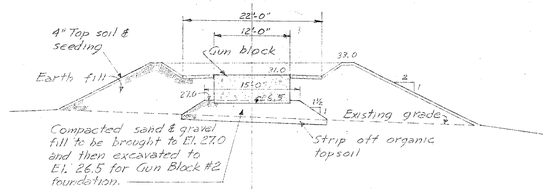

SECTION C-C
Scale 1" = 10'-0"

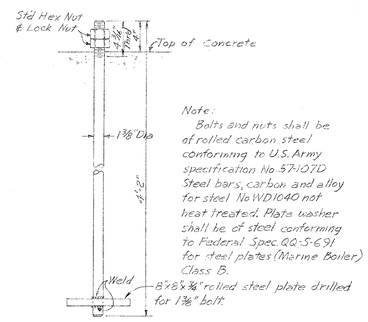

Note:
Bolts and nuts shall be of rolled carbon steel conforming to U.S. Army specification No. 57-107D Steel bars, carbon and alloy for steel No WD1040 not heat treated. Plate washer shall be of steel conforming to Federal Spec. QQ-S-691 for steel plates (Marine Boiler) Class B.

DETAIL OF ANCHOR BOLT
Scale 1½" = 1'-0"

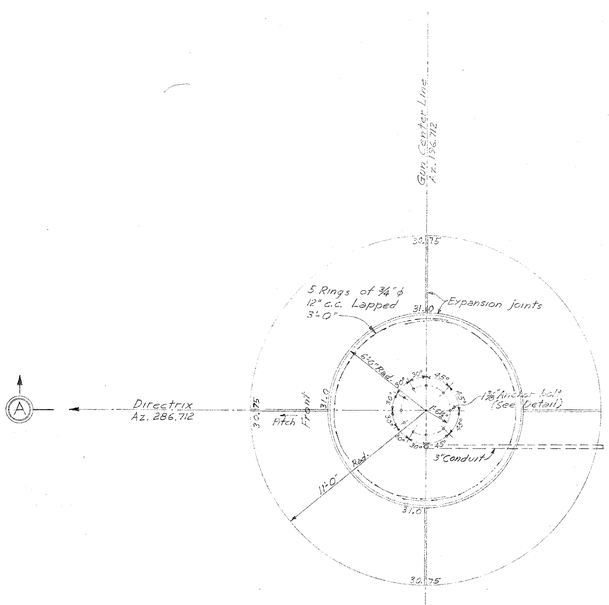

PLAN OF GUN BLOCK
Scale ¼" = 1'-0"

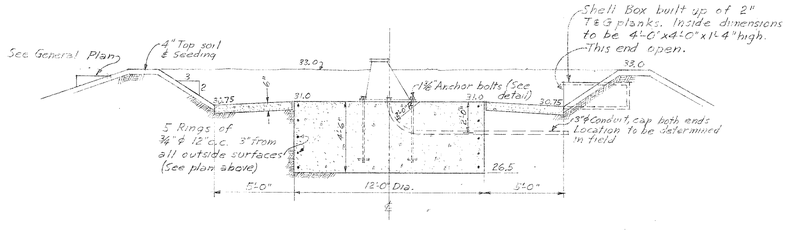

SECTION A-A THRU GUN BLOCK
Scale ¼" = 1'-0"

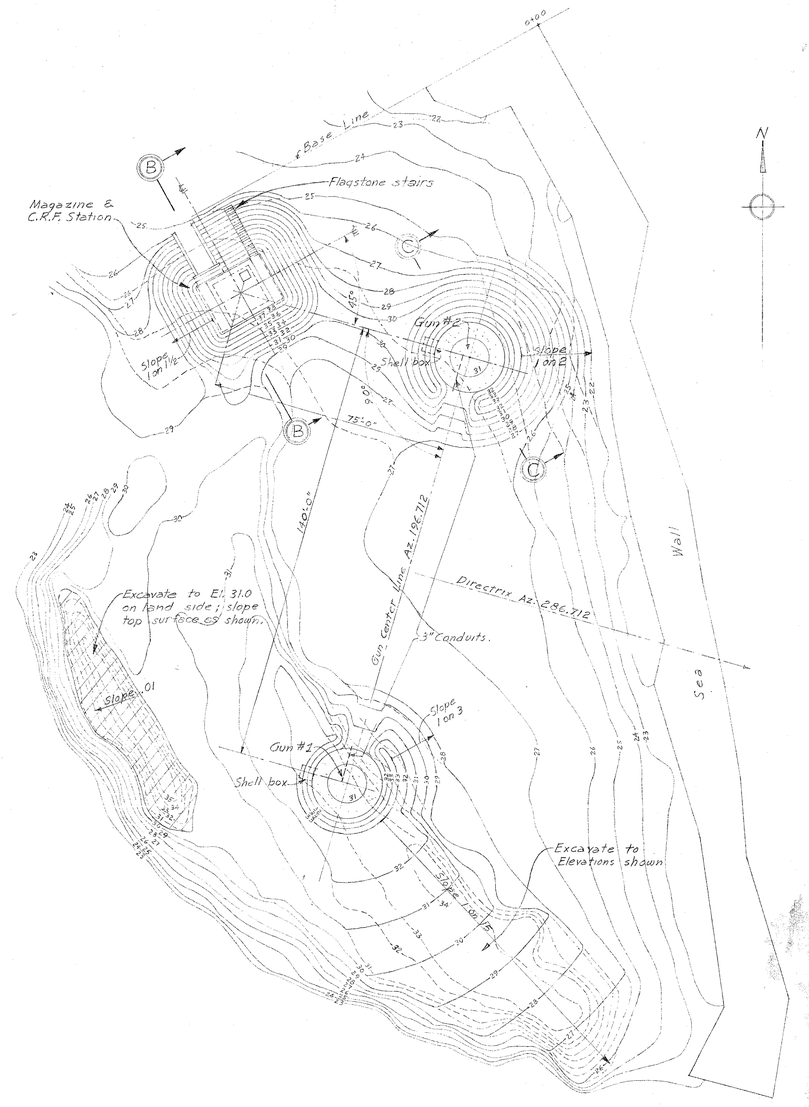

GENERAL PLAN
Scale 1" = 20'-0"

HARBOR DEFENSES OF BOSTON
RELOCATION OF BATTERY TAYLOR
FORT DAWES
GENERAL PLAN AND DETAILS

IN SHEETS SHEET NO. SCALE AS NOTED
U. S. ENGINEER OFFICE, BOSTON, MASS. JUNE 1942

APPROVAL RECOMMENDED: John E. Allen
CHIEF, DEFENSE AND FLOOD CONTROL SUBDIVISION

APPROVED: R. B. Gallagher
COLONEL, CORPS OF ENGINEERS
DISTRICT ENGINEER

SUBMITTED: H. S. Brown
CHIEF, DESIGN SECTION, SR. ENGINEER

J. Norman Gay
ASSOCIATE ENGINEER

DES. BY
DR. BY G. McC.
TR. BY
CH. BY J.N.G.

FILE NO. 4-7-4-8

NO.	CHARACTER	DATE	BY
2.	Transfer Dwg. - No Change	2-17-44	RHG
1.	Magazine stairs relocated	10/20/43	B.K.

REVISIONS

TRANSFER DRAWING

BOSTON BLUE PRINT CO., INC., NO. 130W