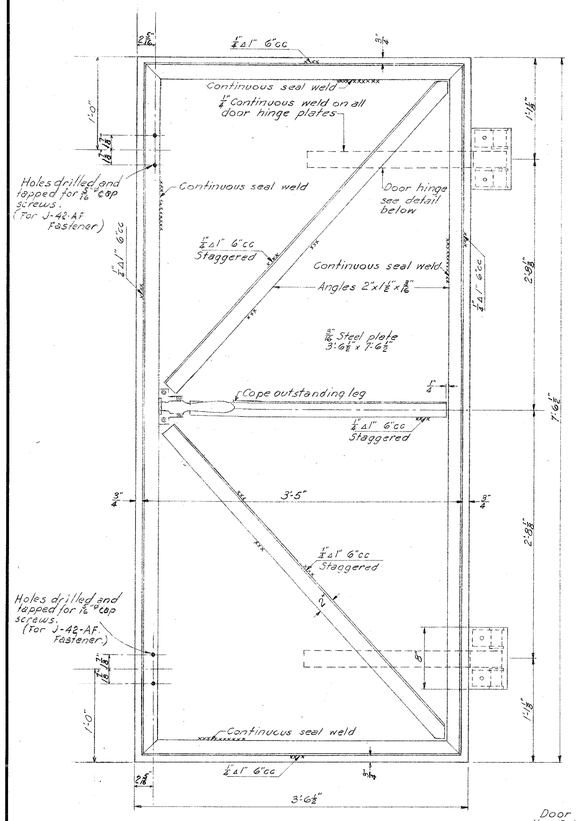

DOOR
AIR LOCK ELEVATION
SCALE 1 1/2"=1'-0"

Door to be equipped with the following:-
1- Jamison improved automatic door closer.
2-Jamison J-40-A fasteners
2-Jamison door handles
2-Jamison 26" hinges Type A.F.
(See Assembly Details for Jamison Pattern numbers)

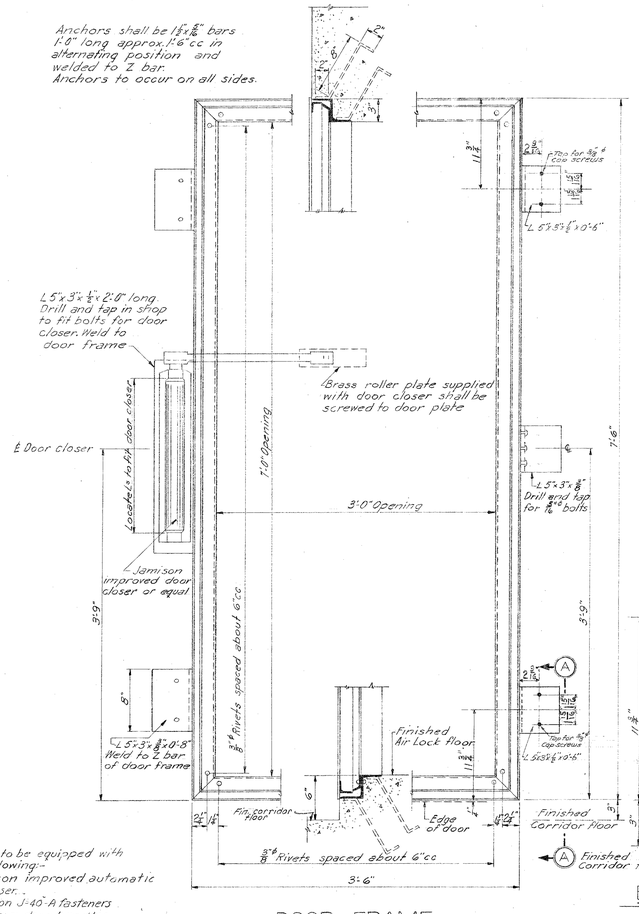

DOOR FRAME
CORRIDOR SIDE ELEVATION
SCALE 1 1/2"=1'-0"

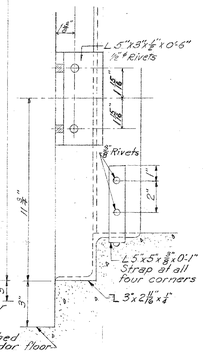

ELEVATION AA
SCALE 3"=1'-0"

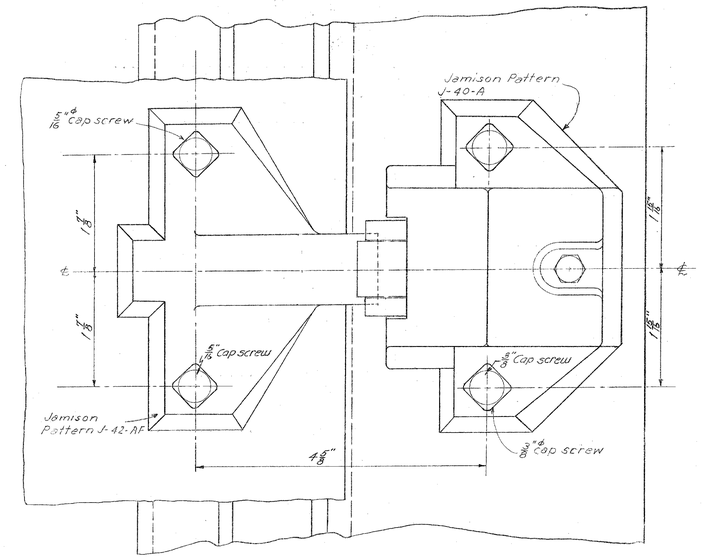

ELEVATION

DOOR FASTENER ASSEMBLY
SCALE FULL SIZE

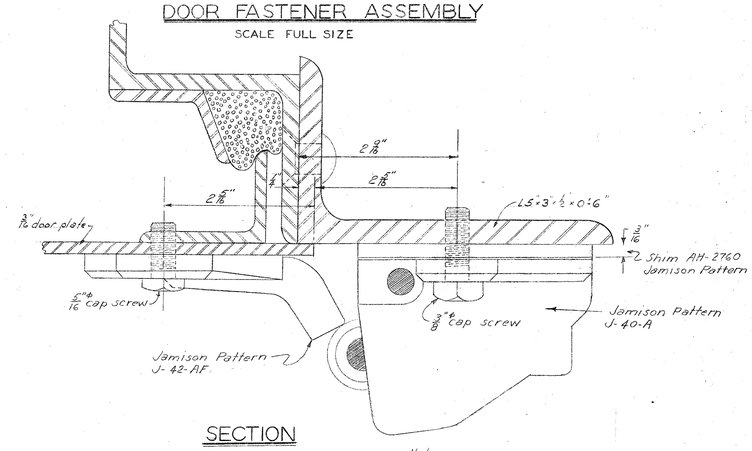

SECTION

DOOR AND FRAME TYPE 5
ONE REQUIRED

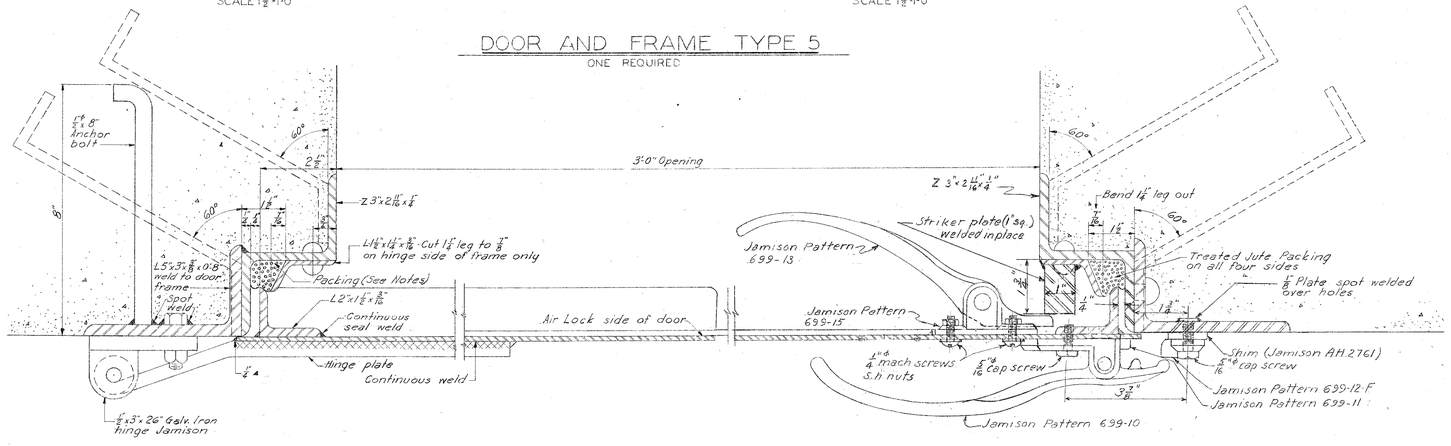

ASSEMBLY DETAILS
SCALE 6"=1'-0"

Notes:-
All materials shall be structural steel unless otherwise noted.
All sharp edges on doors shall be removed.
Door and frame complete with hinges, bearings, pins, Jamison door closers, fasteners, and handles or equal shall be assembled in shop to check fit and clearances of all members.
Parts subject to damage shall be removed prior to shipment and boxed separately.
Packing for door seal shall be treated jute packing installed at time of erection.
Provide shop coat of red lead paint except for surfaces embedded in concrete.

RECORD DRAWING

HARBOR DEFENSES OF BOSTON
BATTERY NO. 105
PLOTTING ROOM
DOOR DETAILS NO. 1

IN 20 SHEETS SHEET NO. 16 SCALE AS SHOWN
U. S. ENGINEER OFFICE, BOSTON, MASS. APRIL, 1943

APPROVAL RECOMMENDED: John E. Allen, CHIEF, ENGINEERING DIVISION
APPROVED: G. W. Whistler, COLONEL, CORPS OF ENGINEERS, DISTRICT ENGINEER
SUBMITTED: F. B. Brown, CHIEF, DESIGN SECTION, SR. ENGINEER
Walter A. Brindley, ASSOCIATE ENGINEER
DES. BY, DR. BY J.V.R., TR. BY, CH. BY R.J.B.
FILE NO. 4-7-4-18/16

NO.	CHARACTER	DATE	BY
1	Final field changes for Record Drawing	1-15-45	Plans

REVISIONS

B. L. M., Inc.