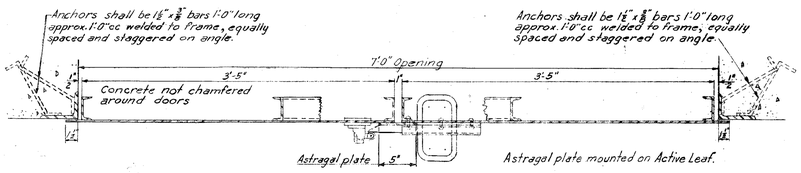

SECTION A A

SCALE 1 1/2" = 1'-0"

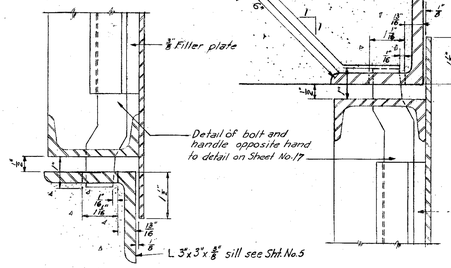

SECTION C C

BOTTOM BOLT

SCALE: HALF SIZE

SECTION D D

TOP BOLT

SCALE: HALF SIZE

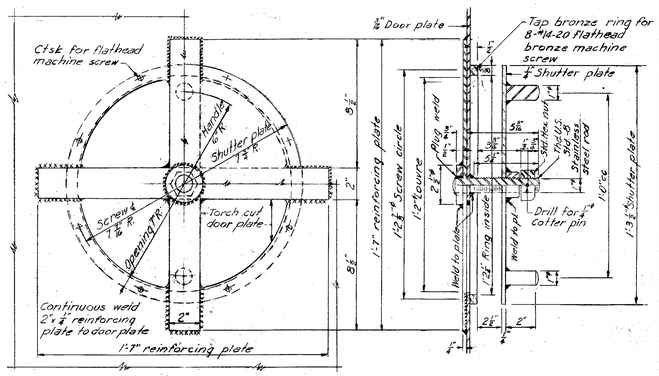

CLOSURE DOOR LOUVRE

SCALE 3" = 1'-0"

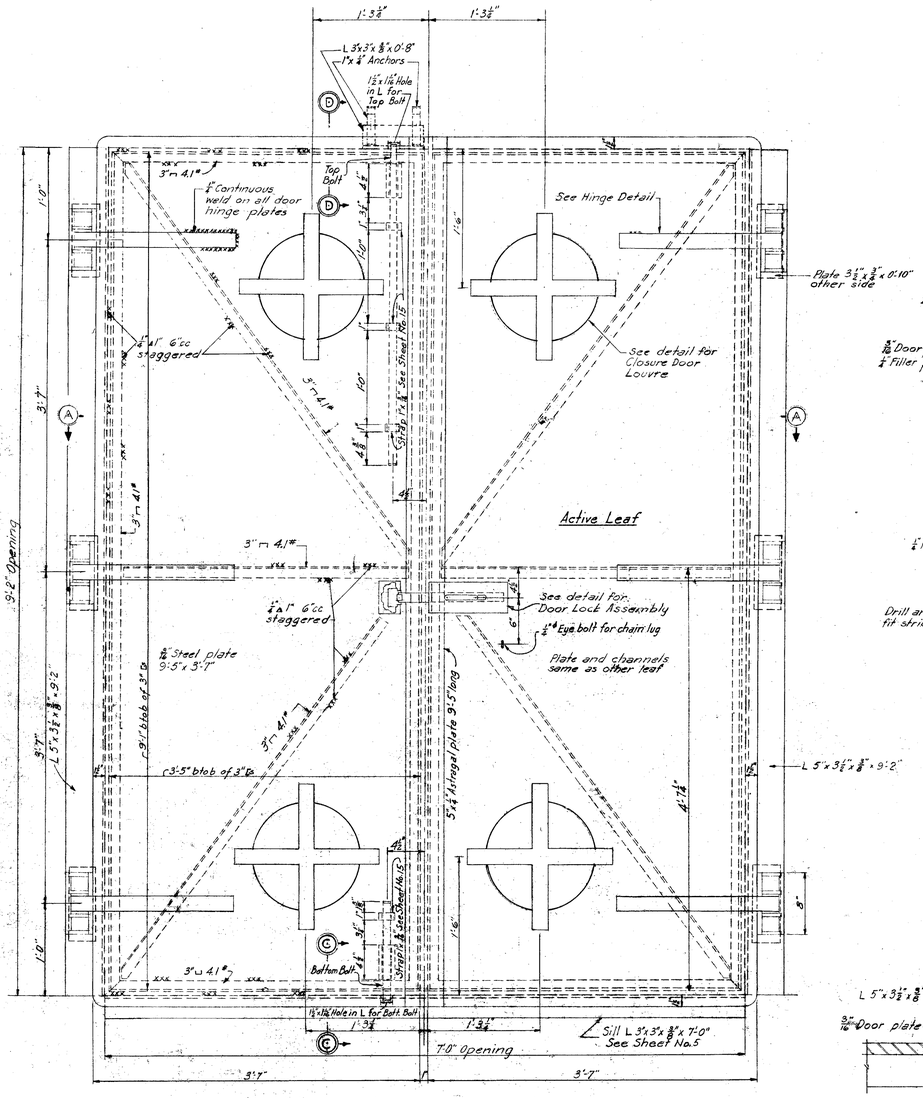

DOOR ASSEMBLY

TYPE 10 7'-0" x 9'-2" OPENING

ONE REQUIRED

SCALE 1 1/2" = 1'-0"

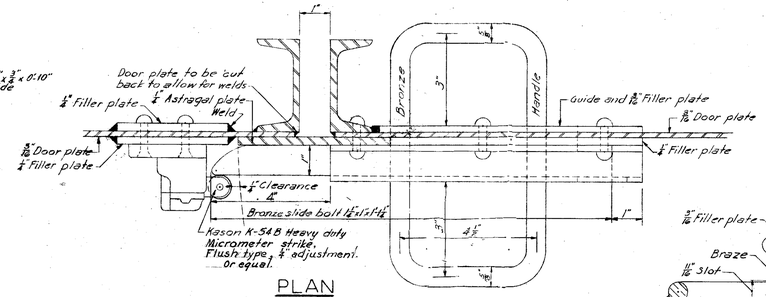

PLAN

SCALE: HALF SIZE

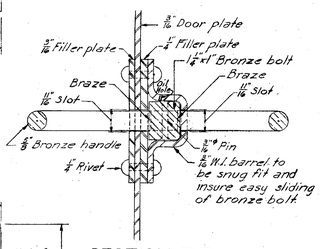

SECTION B-B

SCALE: HALF SIZE

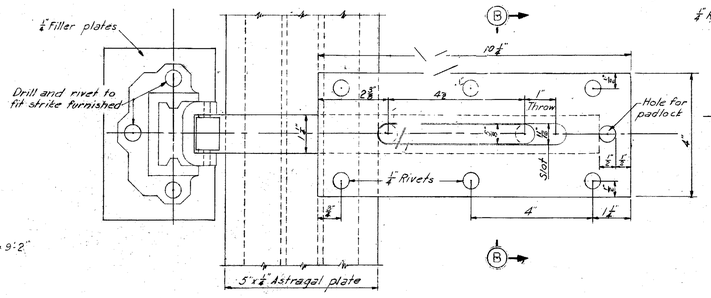

DOOR LOCK ASSEMBLY

SCALE HALF SIZE

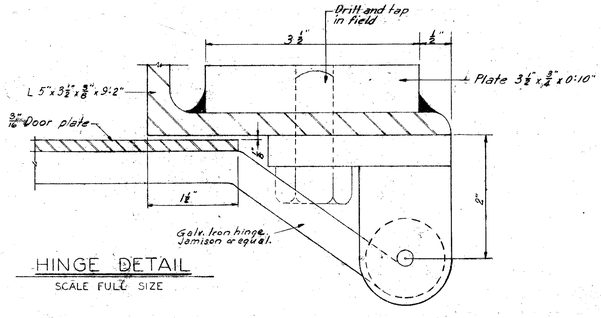

HINGE DETAIL

SCALE FULL SIZE

Notes:

Provide shop coat of red lead paint except for surfaces embedded in concrete.

Doors shall be assembled in shop to check fit and clearances.

All sharp edges on door shall be removed.

Parts subject to damage shall be removed prior to shipment and boxed separately.

All materials shall be structural steel unless otherwise noted.

NO.	CHARACTER	DATE	BY
1	RECORD DRAWING - No changes	1-15-43	Pwj

REVISIONS

RECORD DRAWING

HARBOR DEFENSES OF BOSTON

BATTERY NO. 105

PLOTTING ROOM

DOOR DETAILS NO. 3

IN 20 SHEETS SHEET NO. 18 SCALE AS SHOWN

U.S. ENGINEER OFFICE, BOSTON, MASS. APRIL, 1943

APPROVAL RECOMMENDED: John E. Allen, CHIEF, ENGINEERING DIVISION

APPROVED: G. W. Gillette, COLONEL, CORPS OF ENGINEERS, DISTRICT ENGINEER

SUBMITTED: J. F. Brown, CHIEF DESIGN SECTION, J.R. ENGINEER

Peter A. Mulhall, ASSOCIATE ENGINEER — DR. BY J.V.R. CK. BY J.R.B. CH. BY R.J.B.

FILE NO. 4-7-4-18/18

97