WAR DEPARTMENT

CORPS OF ENGINEERS, U. S. ARMY

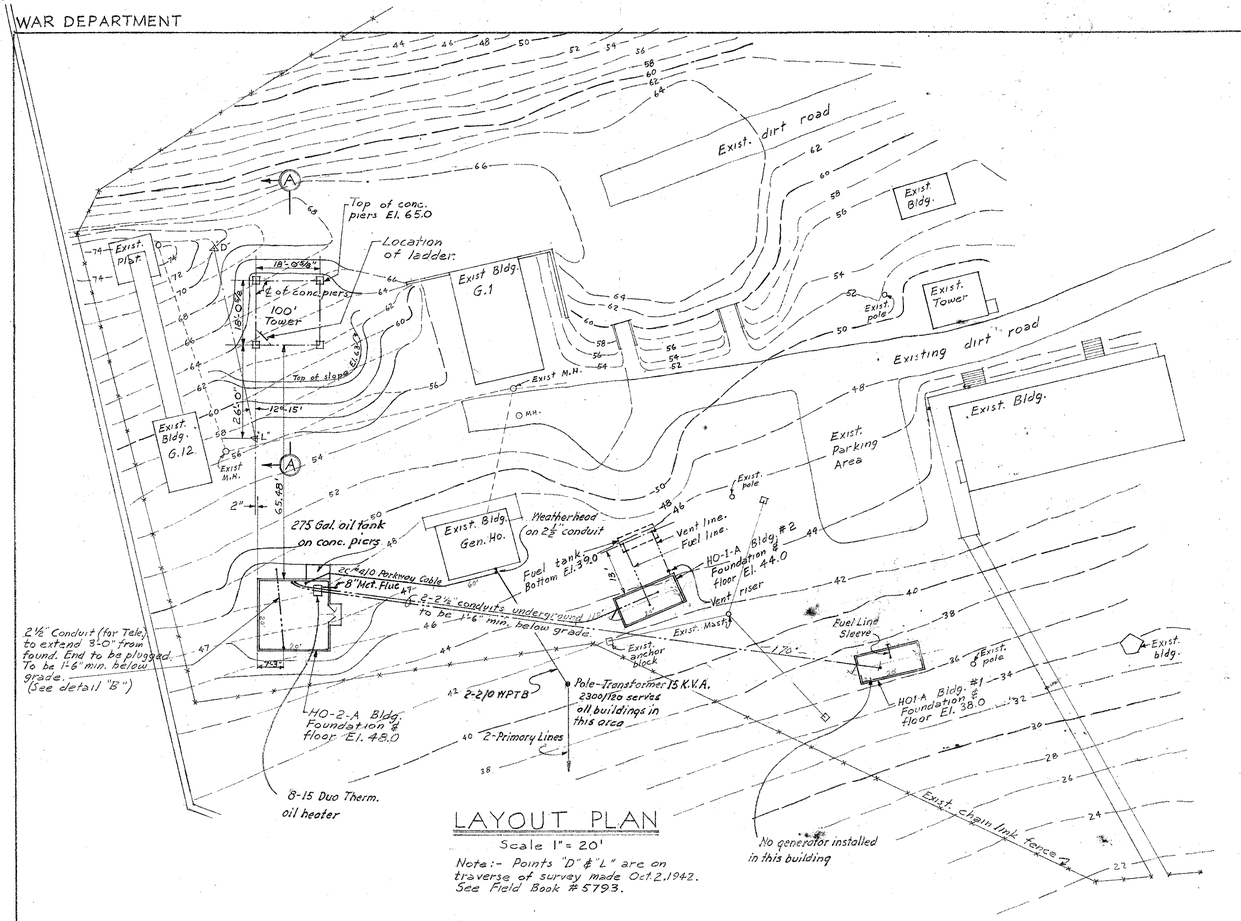

LAYOUT PLAN

Scale 1" = 20'

Note:- Points "D" & "L" are on traverse of survey made Oct. 2, 1942. See Field Book #5793.

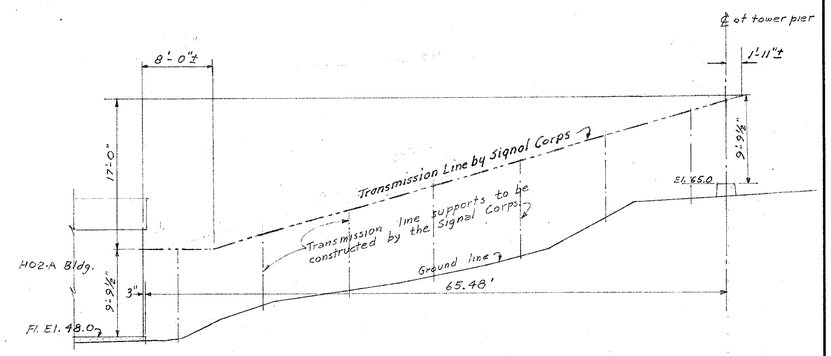

TRANSMISSION LINE DIAGRAM

Scale ⅛" = 1'-0"

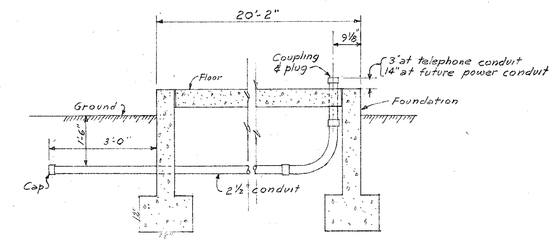

DETAIL "B"

Note:
The following Standard Drawings apply without modification: ES-D-11059(A), ES-D-8980(B), ES-D-10854(B), ES-D-10855(B), ES-D-10862(B), ES-D-10892(B), ES-D-10893(B), ES-D-11020(B), ES-D-11062(A), ES-D-8981, ES-D-10727(A), ES-D-10851(A), ES-D-10852(A), ES-D-10853(A), ES-D-11024(B), ES-D-11025(B), ES-D-11032(B), ES-D-11033(A), ES-D-11034(A), ES-D-11035(A), ES-D-11036(A), ES-D-11042(A), ES-D-11047(A), ES-D-11048(A), ES-D-11083(B), ES-D-11084(B), ES-D-11051(A), ES-D-11052(A), ES-D-11053(A), ES-D-11054(A), ES-D-11055(B), ES-D-11056(A), ES-D-11057(A), ES-D-11058(A), ES-D-11085(A), ES-D-11093(A) and ES-D-13986(A).

Note:-
Initial work shall include furnishing and placing concrete for 3 bldg. foundations and tower piers, all embedded items, and buried conduits.

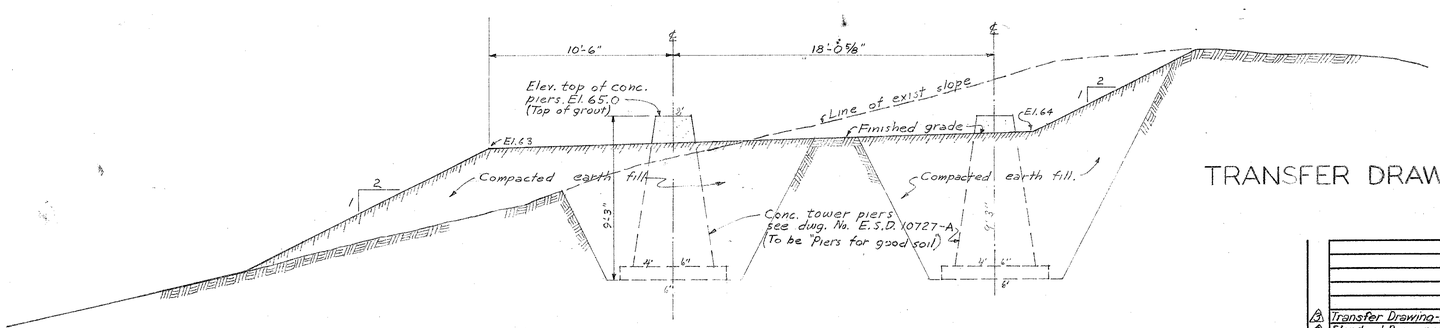

SECTION A-A

Scale ¼" = 1'-0"

TRANSFER DRAWING

NO.	CHARACTER	DATE	BY
3	Transfer Drawing-No changes	5/22/44	B.K.
2	Standard Dwgs. nos. added	5/22/44	B.K.
1	Final Field Changes	2-22-44	N.G.

REVISIONS

HARBOR DEFENSES OF BOSTON

SCR-296-A - SET NO. 26 - LOCATION NO. 127

LAYOUT PLAN

IN 1 SHEET — SHEET NO. 1 — SCALE AS NOTED

U. S. ENGINEER OFFICE, BOSTON, MASS. — NOV., 1942

APPROVAL RECOMMENDED: John E. Allen
CHIEF, DEFENSE AND FLOOD CONTROL SUBDIVISION

APPROVED: F. W. Gillette
COLONEL, CORPS OF ENGINEERS
DISTRICT ENGINEER

SUBMITTED: J. B. Brown
CHIEF, DESIGN SECTION, SR. ENGINEER

Norman Lian
ASSOCIATE ENGINEER

DES. BY
DR. BY G. McC.
TR. BY
CH. BY J.H.G.

FILE NO. 4-10-2-7