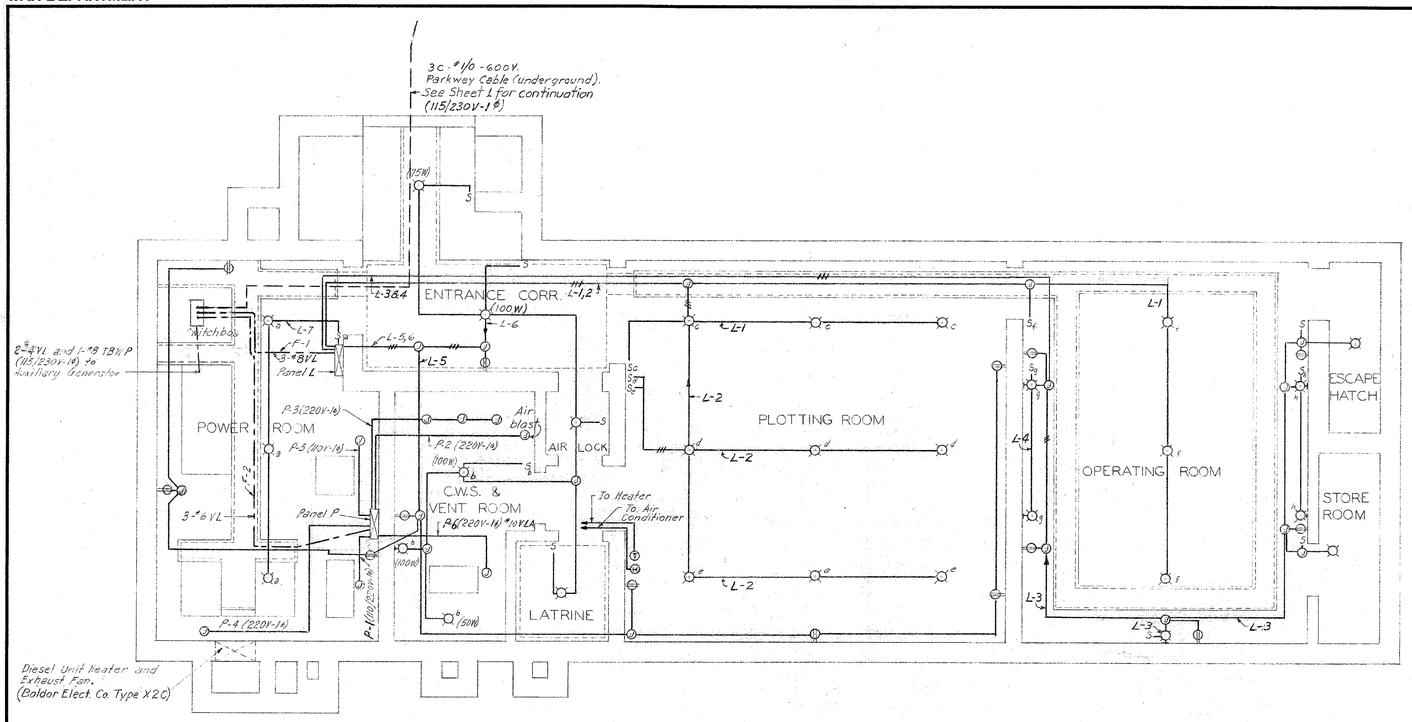

MATERIAL SCHEDULE				
CIRCUIT NO.	NO. REQ'D.	ITEM	C.F.S. NO.	REMARKS
L	1	Panel		1-2" Hub on bottom, 2-$\frac{3}{4}$" Hubs on each side, 6-$\frac{3}{4}$" Hubs on top. Mains 115/230 Volt 2P+SN 8-20 Amp SP branches
3	2	Ceiling lamp fixtures	1	
	3	Wall lamp fixtures	3	
	4	Snap switches	8	
	5	Junction boxes	9	
	3	Receptacles	10	
4	2	Wall lamp fixtures	3	
	1	Snap switches	8	
	2	Junction boxes	9	
	2	Receptacles	10	
1	6	Ceiling lamp fixtures	1-A	
	2	Snap switches	8	
	2	Junction boxes	9	
2	6	Ceiling lamp fixtures	1-A	
	2	Snap switches	8	
8		Spare		
6	1			
	6	Ceiling lamp fixtures	1	
	1	Wall lamp fixture	3	
	5	Snap switches	8	
	2	Junction boxes	9	
7	3	Ceiling lamp fixtures	1-A	
	1	Snap switch	8	
5	5	Junction boxes	9	
	9	Receptacles	10	
P	1	Panel		1-2" Hub on bottom, 1-$\frac{3}{4}$" Hub on each side, 6-$\frac{3}{4}$" Hubs on top. Mains 115/230 Volt, 2P+SN 1-25 Amp, 2P branch; 5-15 Amp 2P branches; 2-15 Amp, SP branches.
6	1	Junction box	9	Air Conditioner, 220V-1φ
2	1	Junction box	9	Blower, 220V-1φ
3	3	Junction boxes	9	C.W.S. Equipment, 220V-1φ
4	1	Junction box	9	Diesel Unit Heater & Exhaust Fan 220V-1φ
5	1	Junction box	9	Oil Burner 110V-1φ
1	1	Junction box	9	Evaporative Condenser 110/220V-1φ
7		Spare		
8		Spare		

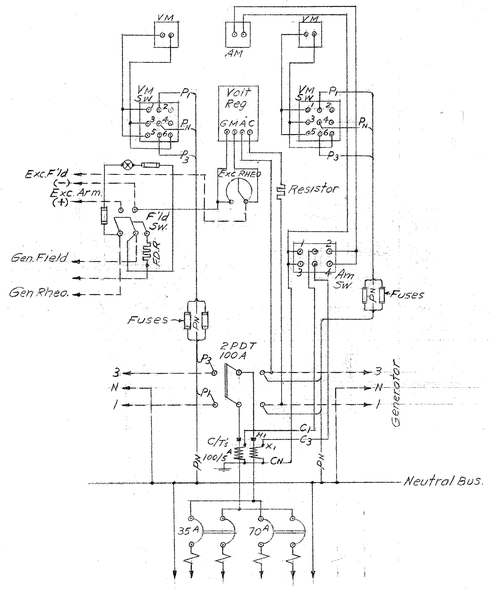

REAR VIEW

SWITCHBOARD WIRING DIAGRAM

NOT TO SCALE

LAMP SCHEDULE	
ROOM DESIGNATION	WATTS
Power Room	200
CWS Room	as noted
Latrine	60
Air Lock	50
Entrance Corridor	as noted
Plotting Room	200
Operating Room (Center)	200
Operating Room (bracket)	100
Store Room	75
Escape Hatch	100

MATERIAL IDENTIFICATION		
C.F.S. NO.	ITEM	IDENTIFICATION
1	Ceiling lamp fixture	1-Condulet, GRFX 229 1-Gasket, GASK 643 1-Lamp Assembly, ARB 91
1-A	Ceiling lamp fixture with shade	1-Condulet, GRFX 229 1-Gasket, GASK 643 1-Lamp Assembly, ARB 93 1-Dome Reflector: SH 28 or SH 29
3	Wall lamp fixture	1-Condulet, GRFX 229 1-Gasket, GASK 643 1-Lamp Assembly, ARB 95
8	Snap switch	1-Condulet, FS 2 1-Gasket, GASK 425 1-Cover, DS 181 1-Switch, Bryant #4961 or equal
9	Junction box	1-Condulet, GRFX 229 1-Gasket, GASK 643 1-Cover, GRF 10
10	Receptacle	1-Condulet, GRFX 229 1-Gasket, GASK 643 1-Receptacle, ARB 327 1-Plug, BP 8522
	Panel L or P	1-Panel box, DVP Series (Hubs, mains and branch circuit arrangement as noted.)
	Cable couplings	Couplings as required, CGB Series.
	Cable Hangers	Hangers, Fee Mason Co. Cat. No. FIG 316

Catalog numbers refer to Crouse Hinds Catalog 2500 unless otherwise noted. Items of material of similar and equal manufacture may be used.

Note:-

All wiring to be 2C-#12 varnished cambric insulated, lead covered, flat steel armored, jute overall, cable unless otherwise noted.

All cables to be supported at intervals not greater than 30 inches.

All condulets to be tapped for $\frac{3}{4}$" couplings.

Mount switches and receptacles 4'-6" above floor.

Mount wall lamp fixtures 6'-6" above floor.

Feeders to panel boxes, and service cables from Commercial and Auxiliary sources to be installed in cable trenches.

Feeders from trench to panel to be installed in conduit.

Connections between junction boxes and equipment shall be made by Electrical Contractor.

Location for connection of cable from switchboard to Auxiliary Generator shall be determined in the field to suit equipment furnished.

LEGEND

- Ceiling Outlet
- Wall Outlet
- Junction box
- Receptacle
- S Wall switch
- Cable, surface mounted (2C-#12 unless otherwise noted).
- Cable, in trenches and ducts (size and number conductors as noted)
- Panel or Switchboard
- T Thermostat
- H Humidistat

CLASSIFICATION CANCELLED BY AUTHORITY OF OCE 6/20/67 date 5/24/67 signature

CONFIDENTIAL

RECORD DRAWING

NO.	CHARACTER	DATE	BY
1	Final field changes made for RECORD DRAWING	8/20/45	P.A.M.

REVISIONS

HARBOR DEFENSES OF BOSTON

MINE CASEMATE

SPLINTER PROOF LOCATION NO. 127

ELECTRICAL LAYOUT

IN 14 SHEETS SHEET NO. 10 SCALE $\frac{1}{4}$"=1'-0"

U. S. ENGINEER OFFICE, BOSTON, MASS. 22 SEPTEMBER, 1943.

APPROVAL RECOMMENDED: John L. Allen, CHIEF ENGINEERING DIVISION

APPROVED: Philip D. Rodgers, LT. COLONEL, CORPS OF ENGINEERS, DISTRICT ENGINEER

SUBMITTED: F. S. Brown, CHIEF DESIGN SECTION, SR. ENGINEER

Sigfred Grade, SENIOR ENGINEER

DES. BY L.E.C. DR. BY J.K.R. TR. BY CH. BY L.E.C.

FILE NO. 4-7-4-23/10